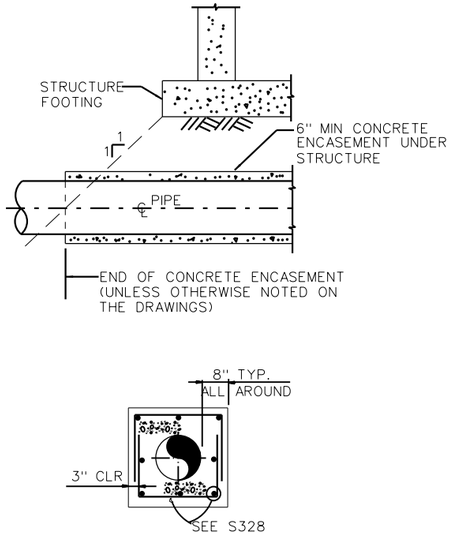

S318 TYP END OF PIPE ENCASEMENT UNDER STRUCTURES NTS

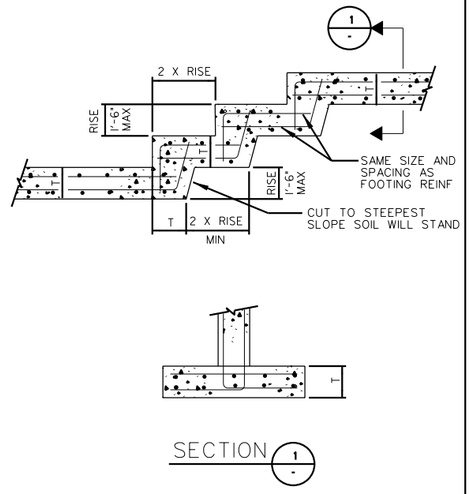

S319 TYP STEPPED FOOTING NTS

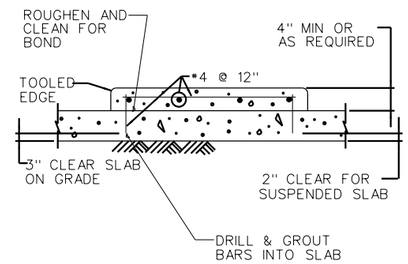

S320 TYP HOUSEKEEPING PAD NTS

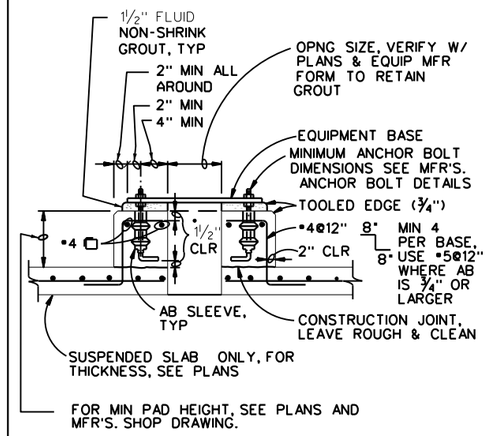

S321 TYP EQUIPMENT BASE NO. 1 NTS

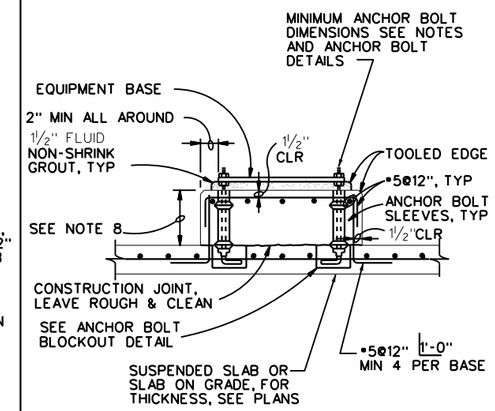

S322 TYP EQUIPMENT BASE NO.2 NTS

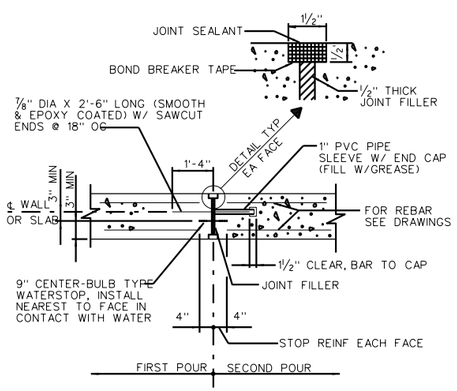

S323 TYP SLAB/WALL EXPANSION JOINT

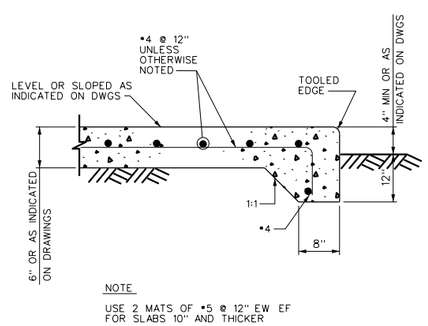

S324 TYP SLAB ON GRADE

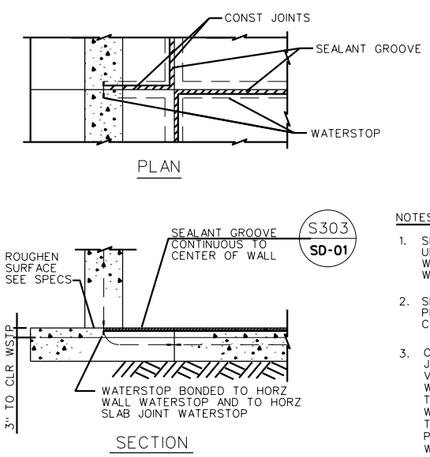

NOTES:

1. SEALANT GROOVE SHALL BE CONTINUED UNDER WALL & SEALANT SHALL BOND WITH WALL WATERSTOP IN ALL CASES WHERE SUCH WATERSTOP OCCURS
2. SEALANT UNDER WALL SHALL BE IN PLACE PRIOR TO PLACEMENT OF CONCRETE FOR WALL
3. CONSTRUCTION JOINTS PASSING THROUGH VARIOUS MEMBERS OF A WATER RETAINING STRUCTURE SHALL BE SEALED WITH WATERSTOPS BONDED TOGETHER, SO AS TO PROVIDE A CONTINUOUS WATERTIGHT JOINT

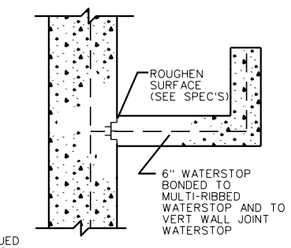

S325 TYP CONSTRUCTION JOINT DETAILS WALL TO SLAB

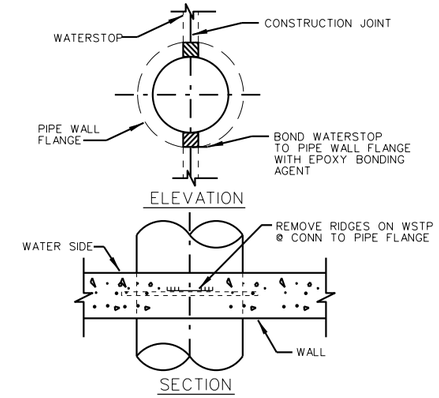

S326 TYP CONSTRUCTION JOINT DETAILS AT PIPE OPENINGS

No.	DATE	REVISIONS	APPROVED

DESIGNED: OAA
DRAWN: GMT
CHECKED: OAA

RBF CONSULTING

carollo

IRVINE RANCH WATER DISTRICT

M. OSAMA ABDEL-AAL RCE NO. 34252 PROJECT MANAGER DATE
JIM MEYERHOFER RCE NO. 48451 PROJECT MANAGER DATE
PATRICIA UEMATSU RCE NO. 36762 PRINCIPAL ENGINEER DATE

IRVINE RANCH WATER DISTRICT
BAKER WATER TREATMENT PLANT
PROJECT NO. 11218

STRUCTURAL STANDARD DETAILS - 3

DRAWING S003

SHEET 171 OF 632

NOTE:
TREAD SHALL RECEIVE A STEEL TROWEL FINISH. IMMEDIATELY THEREAFTER, THE SURFACE SHALL BE SLIGHTLY ROUGHENED BY DRAWING A STIFF BRUSH OVER THE SURFACE AT A RIGHT ANGLE TO THE DIRECTION OF TRAFFIC TO PRODUCE A NON-SKID SURFACE

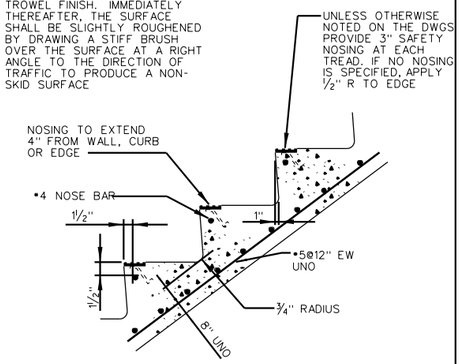

S327 TYP — CONCRETE STAIR DETAIL

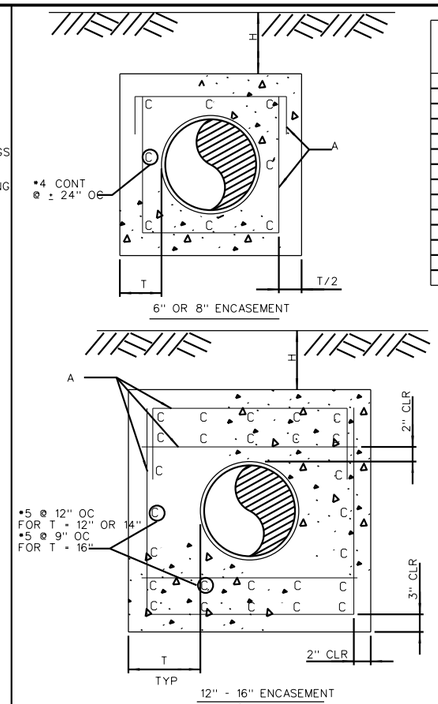

COVER H	PIPE DIAMETER 8"-24" A	8"-24" T	30"-32" A	30"-32" T	36" A	36" T	42"-54" A	42"-54" T	60"-72" A	60"-72" T
2'	•4@12"	6"	•4@12"	6"	•4@9"	6"	•5@12"	8"	•4@9"	12"
3'					•4@12"		•4@9"		•5@12"	8"
4'							•4@12"		•5@10"	
5'							•4@12"		•5@10"	
6'							•4@9"		•5@10"	
7'					•4@12"		•4@9"		•6@12"	
8'			•4@12"		•4@9"		•5@12"		•6@10"	8"
9'			•4@9"	6"	•4@9"	6"	•5@10"		•4@9"	12"
10'		6"	•4@12"	8"	•4@9"	8"	•5@10"	8"	•5@12"	
12'		8"		12"	•4@12"	12"	•4@9"	12"	•5@10"	
14'		12"			•4@12"		•4@9"		•6@12"	
16'					•4@12"		•5@12"		•6@10"	12"
18'			•4@12"		•4@9"	12"	•5@10"	12"	•6@10"	14"
20'	•4@12"	12"	•4@9"	12"	•4@9"	14"	•6@12"	14"	•6@10"	16"

NOTES:
1. PIPE ENCASEMENT DESIGNED FOR EMBANKMENT CONDITION
2. WHERE ENCASEMENT PASSES UNDER SPREAD FOOTING OR MAT FOUNDATION, USE H=20' UNO
3. ALL ENCASEMENTS UNDER STRUCTURES SHALL BE SEPARATED FROM THE STRUCTURE FOUNDATIONS BY BACKFILL OR 2 LAYERS OF 40# FELT UNO
4. WHEN ENCASEMENTS TERMINATE @ STRUCTURE, ENCASEMENT REINFORCING SHALL BE DOWELED INTO THE STRUCTURE

S328 TYP — ENCASEMENT DETAIL ENBANKMENT CONDITION

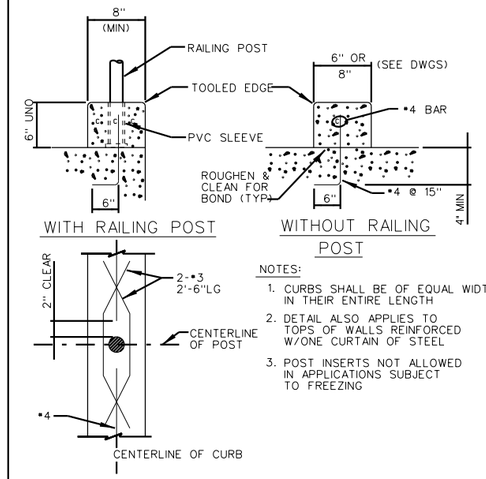

NOTES:
1. CURBS SHALL BE OF EQUAL WIDTH IN THEIR ENTIRE LENGTH
2. DETAIL ALSO APPLIES TO TOPS OF WALLS REINFORCED W/ONE CURTAIN OF STEEL
3. POST INSERTS NOT ALLOWED IN APPLICATIONS SUBJECT TO FREEZING

S329 TYP — TYPICAL CURB DETAIL

DIAMETER (inches)	MINIMUM EMBEDMENT TOP OF COLUMNS	MINIMUM EMBEDMENT OTHER APPLICATIONS
1/4	5	3
3/8	5	3
1/2	6	4
5/8	6	4
3/4	7	5
7/8	8	6
1	9	7
1 1/8	10	8
1 1/4	11	9

NOTES
SOC WMA
1. USE ONLY HEADED ANCHORS, J-BOLTS ARE NOT ALLOWED
2. THIS DETAIL APPLIES TO BOTH CONCRETE AND MASONRY
3. IN MASONRY PROVIDE A 1" ANNULAR SPACE IN BLOCK SHELL AROUND ANCHOR. GROUT TO SURFACE

S338 TYP — TYPICAL ANCHOR MASONRY WALL

NOTE:
WHERE NO DIMENSION IS INDICATED ON THE DRAWINGS, BASE DEPTH SHALL BE SET SO THAT THE BASE WEIGHS AT LEAST TWICE THE WEIGHT OF THE EQUIPMENT SUPPORTED

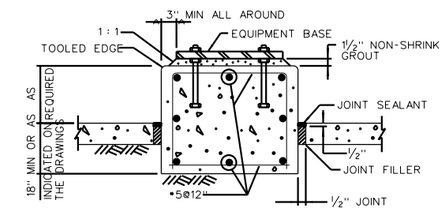

S346 TYP — EQUIPMENT BASE ON GRADE WITH SEPARATING JOINT

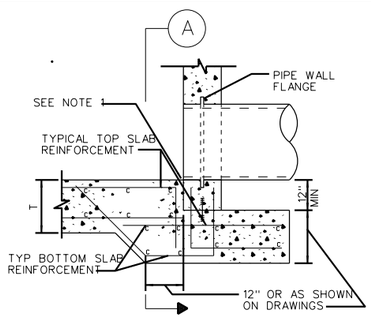

SECTION THRU PIPE

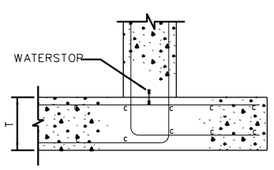

TYPICAL SECTION

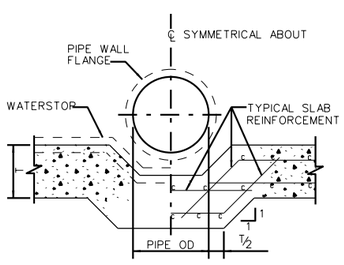

SECTION A

NOTES:
1. SET PIPE INVERT FLUSH WITH SLAB
2. DETAIL IS SIMILAR FOR RCP

S330 TYP — FOOTING DETAIL AT WALL PIPE CONNECTION

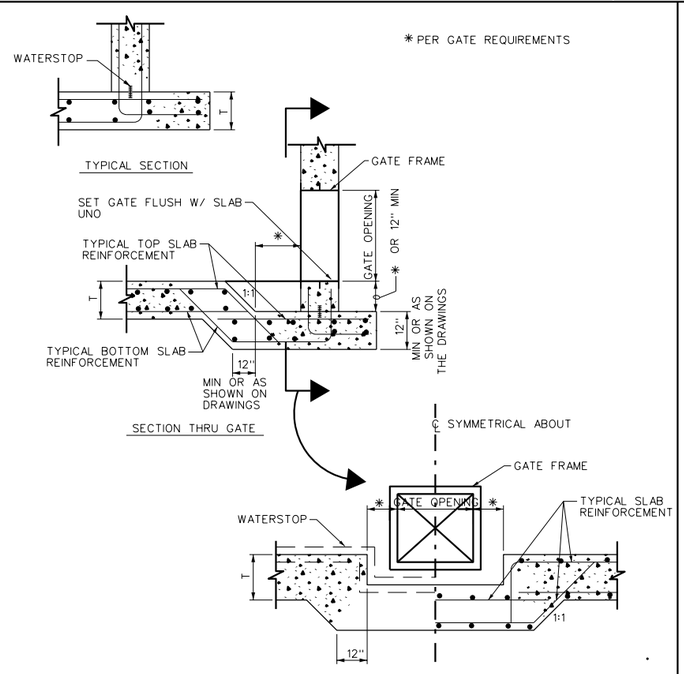

S347 TYP — FLOOR SLAB FOR SLUICE GATE INSTALLATION

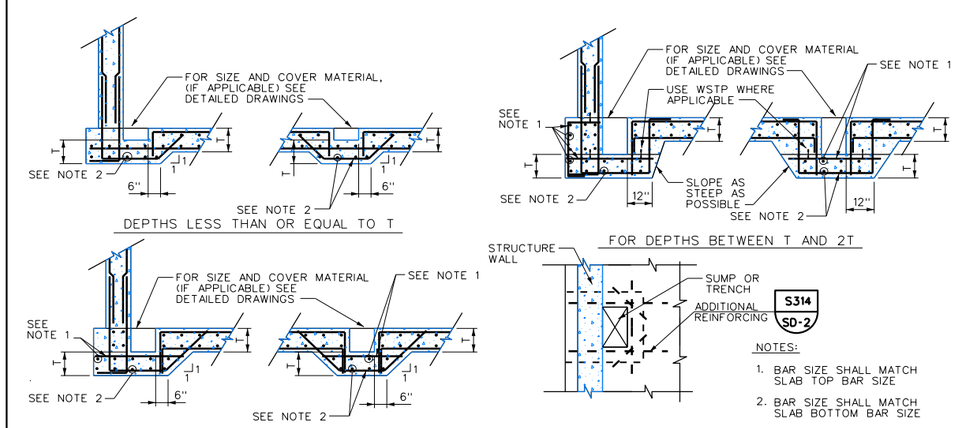

NOTES:
1. BAR SIZE SHALL MATCH SLAB TOP BAR SIZE
2. BAR SIZE SHALL MATCH SLAB BOTTOM BAR SIZE

S348 TYP — REINFORCING AT SUMPS AND TRENCHES

No.	DATE	REVISIONS	APPROVED

DESIGNED: OAA
DRAWN: GMT
CHECKED: OAA

RBF CONSULTING
carollo
IRVINE RANCH WATER DISTRICT

M. OSAMA ABDEL-AAL RCE NO. 34252 PROJECT MANAGER DATE
JIM MEYERHOFER RCE NO. 48451 PROJECT MANAGER DATE
PATRICIA UEMATSU RCE NO. 36762 PRINCIPAL ENGINEER DATE

IRVINE RANCH WATER DISTRICT
BAKER WATER TREATMENT PLANT
PROJECT NO. 11218

STRUCTURAL STANDARD DETAILS - 4

DRAWING S004
SHEET 172 OF 632

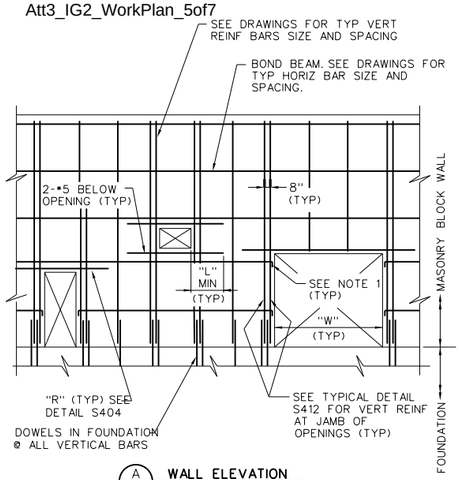

A — WALL ELEVATION

NOTES:

1. ACI STANDARD 90° HOOK ON HORIZONTAL BARS AT OPENINGS.
2. FOR ADDITIONAL REINFORCING, SEE DRAWINGS AND S402.

S401 TYP REINFORCED MASONRY WALL

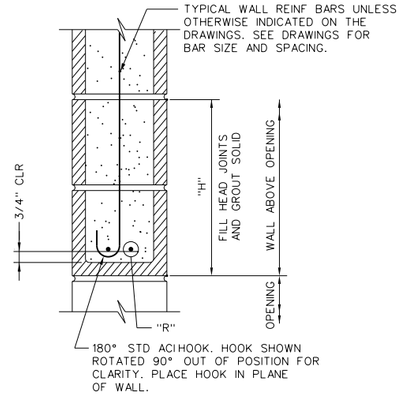

B — SECTION OF LINTEL AT OPENING

LINTEL REINFORCEMENT SCHEDULE			
"W"	"R"	"L"	"H"
LESS THAN 5'-0"	2-•5	2'-6"	16"
GREATER THAN 5'-0" TO 7'-0"	2-•6	3'-0"	32"
GREATER THAN 7'-0" TO 12'-0"	2-•7	3'-6"	40"

S402 TYP REINFORCED MASONRY WALL

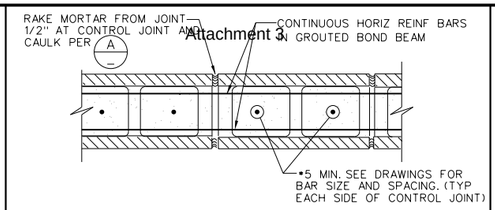

SECTION AT BOND BEAM

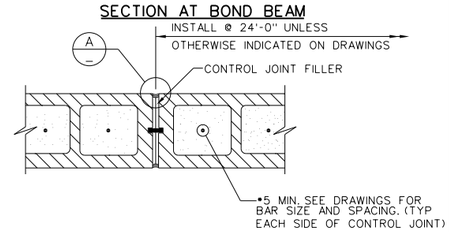

SECTION ABOVE OR BELOW BOND BEAM

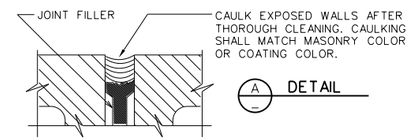

A — DETAIL

S403 TYP MASONRY CONTROL JOINT

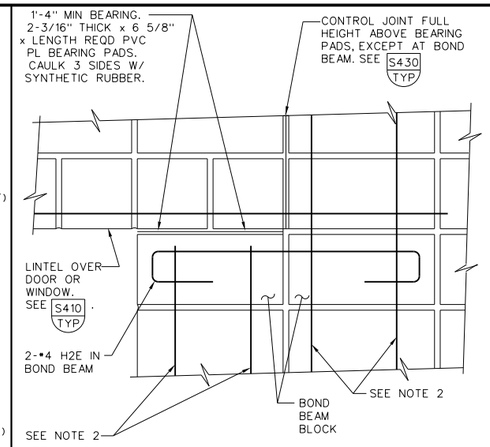

NOTES:

1. ALL BLOCKS BELOW LINTEL BEARING PADS SHALL BE GROUTED SOLID FULL HEIGHT. PROVIDE SMOOTH BEARING SURFACE UNDER PADS.
2. THE BAR SIZE SHALL BE NUMBER 5 MINIMUM, BUT NOT SMALLER THAN THE TYPICAL VERTICAL WALL REINFORCING BARS.

S404 TYP CONTROL JOINT AT LINTEL

SOC WMA

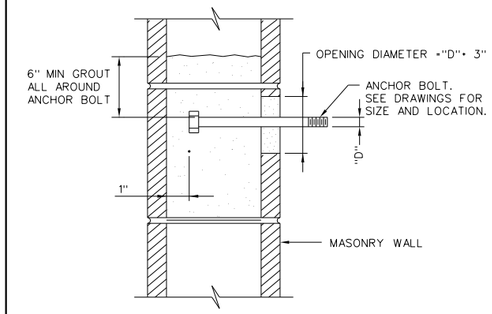

NOTES:

1. SET ANCHOR BOLTS WITH TEMPLATE.
2. CUT BLOCK WEB AS REQUIRED TO ALLOW PLACEMENT OF ANCHOR BOLT WITH 1/2" MINIMUM OF GROUT BETWEEN ANCHOR BOLT AND BLOCK.

S405 TYP ANCHOR BOLTS IN MASONRY

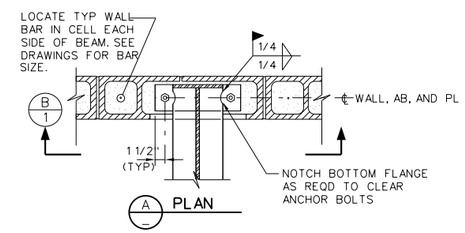

A — PLAN

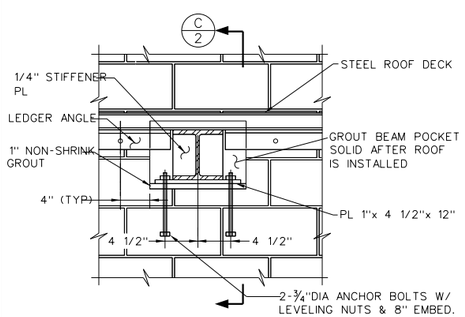

B — SECTION

S406 TYP ROOF BEAM TO EXTERIOR WALL CONNECTION

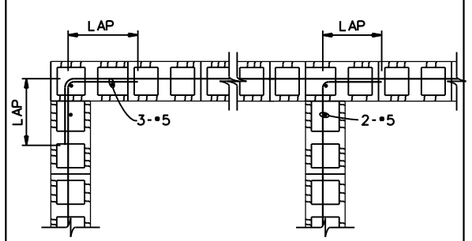

EXTERIOR CORNER INTERIOR CORNER

SINGLE MAT AT 8" CMU WALL

NOTE:
LAP=30 BAR DIAMETERS OR 2'-0" MIN UNLESS OTHERWISE NOTED.

S-407 TYP CMU WALL CORNERS DETAIL

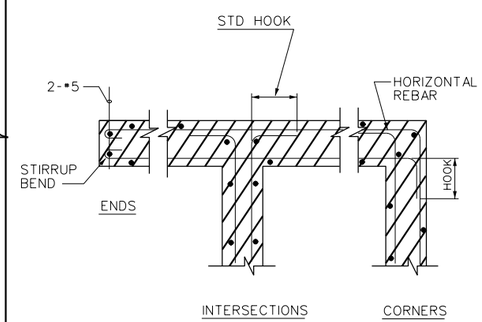

NOTES:

1. DEEP CUT BOND BEAM BLOCKS SHALL BE USED WHERE HORIZONTAL REINFORCING STEEL IS EMBEDDED, AND ABOVE ALL OPENINGS.
2. H-BLOCK BOND BEAMS MAY BE USED AT LOCATIONS OTHER THAN OPENINGS.

S408 TYP 12" BLOCK WALL SECTIONS

No.	DATE	REVISIONS	APPROVED

DESIGNED: OAA
DRAWN: GMT
CHECKED: OAA

RBF CONSULTING

carollo

IRVINE RANCH WATER DISTRICT

M. OSAMA ABDEL-AAL RCE NO. 34252 PROJECT MANAGER DATE
JIM MEYERHOFER RCE NO. 48451 PROJECT MANAGER DATE
PATRICIA UEMATSU RCE NO. 36762 PRINCIPAL ENGINEER DATE

IRVINE RANCH WATER DISTRICT
BAKER WATER TREATMENT PLANT
PROJECT NO. 11218

STRUCTURAL STANDARD DETAILS - 5

DRAWING S005

1. ALL CUT EDGES SHALL BE SEALED WITH RESIN
2. ALL GRATING SHALL BE SECURED IN PLACE WITH REMOVABLE FASTENERS, SIMILAR TO DETAIL S-517
3. BONDING: USE EPOXY ADHESIVE BONDING AGENT
4. WEIGHT OF EACH SECTION OF GRATING SHALL NOT EXCEED 80 POUNDS
5. ALL FRAME COMPONENTS SHALL BE FIBERGLASS
6. T , SEE DRAWINGS

USE LEFT SIDE ONLY WHERE CAST IN FRAME CANNOT BE USED

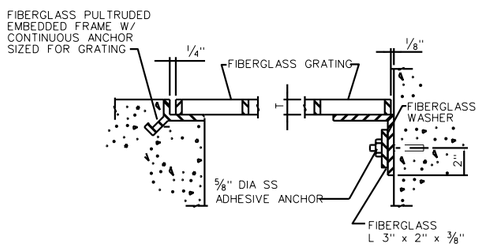

S501 TYP — FIBERGLASS GRATING DETAILS

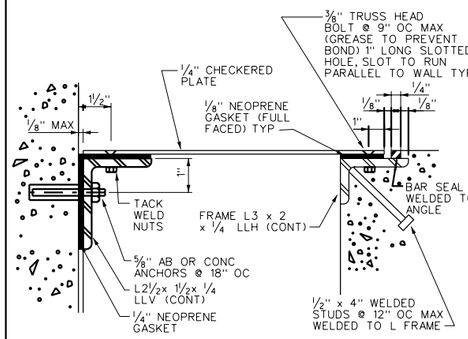

NOTES:

1. CHECKERED PLATE COVERS SHALL BE ALUMINUM UNLESS INDICATED OTHERWISE
2. ALUM CHK'D PLATE -- ALUM FRAME AND STUDS, AND SS ANCHORS AND FASTENERS INSTEAD OF TACK WELDING SS NUTS, USE BACKER PLATE 1/4 X 1 1/2 X 3/8 AND DRILL AND TAP
3. STEEL CHK'D PLATE -- STEEL FRAME AND ANCHORS, SEAL ALL WELDS (GALV AFTER FABRICATION)
4. SS CHK'D PLATE -- SS FRAME AND ANCHORS
5. MAX WEIGHT OF PLATES = 80 LBS

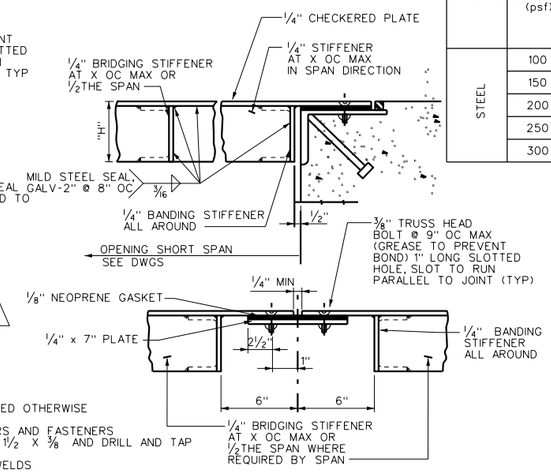

PLATE JOINT DETAIL

MATERIAL	LOADING (psf)	X MAX (in)	MAXIMUM SPAN OF OPENING (ft)						
			STIFFENER SIZE 1/4" X H						
			2"	3"	4"	5"	C6X8.2	C7X9.8	C8X11.5
STEEL	100	40	4.5	6	7	8.5	12	14	15.5
	150	35	4	5	6	7.5	11.5	13	14.5
	200	30	3.5	4.5	5.5	7	11	12.5	14
	250	30	3	4	5	6	10.5	12	13
	300	30	3	4	4.5	5.5	10	11.5	12.5

MATERIAL	X MAX (in)	MAXIMUM SPAN OF OPENING (ft)				
		STIFFENER SIZE 1/4" X H				
		2"	3"	C4X2.331	C5X3.089	C6X4.030
ALUMINUM	25	4.5	5.5	6	7	8
	25	3.5	4.5	5.5	6.5	7.5
	20	3.5	4.5	5.5	6.5	7
	20	3	4	5	6	7
	20	3	3.5	5.0	5.5	6.5

NOTE: "X" = MAXIMUM SPAN OF UNSTIFFENED PLATE COVER

S502 TYP — TYPICAL STIFFENED PLATE- COVERE

SOC WMA

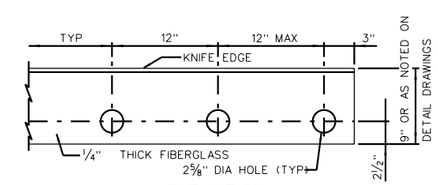

ELEVATION

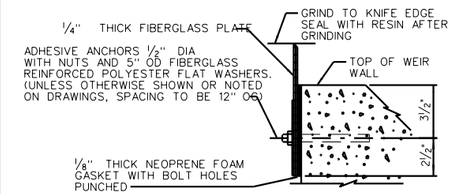

S503 TYP — TYPICAL WEIR DETAIL

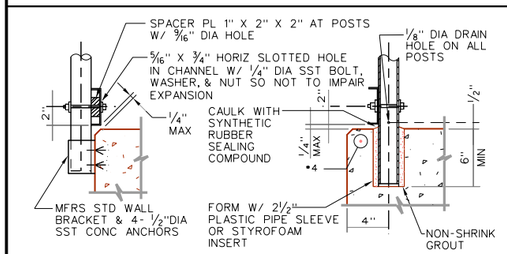

SIDE MOUNTED POST — EMBEDDED POST

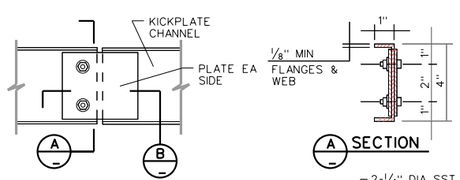

KICKPLATE JOINT

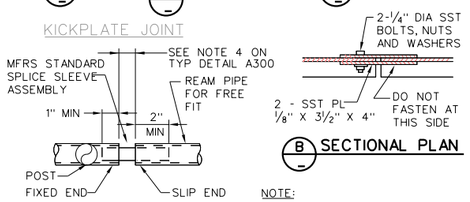

RAIL SLIP JOINT

NOTE:

1. SEE TYPICAL DETAIL A300 FOR ADDITIONAL REQUIREMENTS.

S505 TYP — GUARDRAIL DETAILS

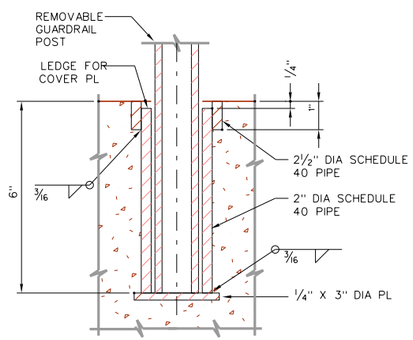

SECTION

NOTES:

1. COAT AL SURFACES IN CONTACT WITH CONCRETE AS SPECIFIED.
2. PROVIDE 1/4" TREAD PLATE COVER FOR EACH REMOVABLE HANDRAIL POST ANCHORAGE.
3. SEE DRAWINGS OR SPECIFICATIONS FOR MATERIAL TYPE(S).

S506 TYP — REMOVABLE GUARDRAIL POST ANCHORAGE

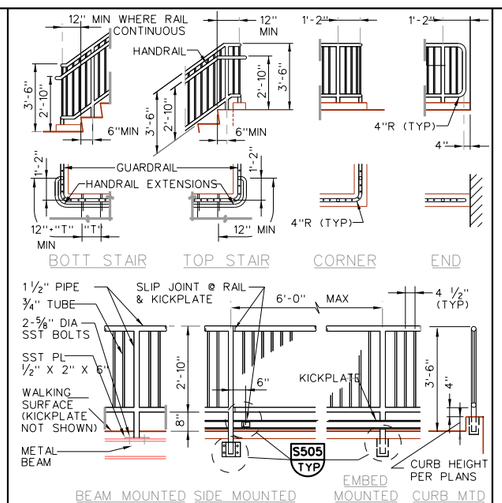

NOTES:

1. THIS DETAIL IS APPLICABLE AT PUBLIC AREAS WHERE ACCESSIBILITY IS REQUIRED, AND SHALL COMPLY WITH THE AMERICANS WITH DISABILITIES ACT, THE CALIFORNIA BUILDING CODE, AND TITLE 24 (IN CALIFORNIA).
2. SEE SPECIFICATIONS AND TYPICAL DETAIL S508 FOR ADDITIONAL REQUIREMENTS.
3. VARIOUS POST MOUNTING DETAILS ARE ILLUSTRATED, SEE DRAWINGS FOR SPECIFIC MOUNTING REQUIREMENTS.

S507 TYP — ALUMINUM PICKET TYPE GUARDRAIL

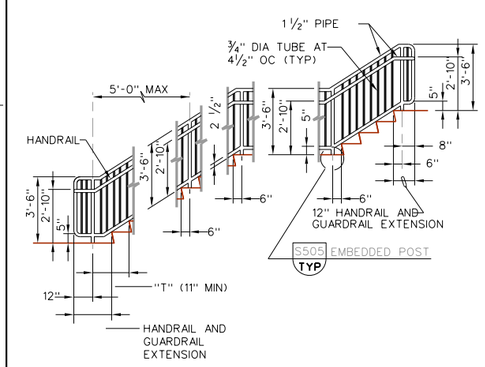

STAIR GUARDRAIL ELEVATION

NOTES:

1. SEE SPECIFICATIONS AND TYPICAL DETAIL S507 FOR ADDITIONAL REQUIREMENTS.
2. HANDRAIL SHALL BE PROVIDED ON EVERY STAIRWAY HAVING TWO OR MORE RISERS. WHEREHANDRAILS ARE REQUIRED, THEY SHALL BE PROVIDED ON BOTHSIDES OF THE STAIRS.
3. INSIDE HANDRAIL ON SWITCHBACK STAIRS SHALL BE CONTINIOUS.
4. WHERE THIS DETAIL IS APPLICABLE, STAIR RISERS SHALL HAVE CLOSED FACES . SEE STAIR TREADS AND RISERS DETAILS.

S508 TYP — ALUMINUM PICKET TYPE GUARDRAIL

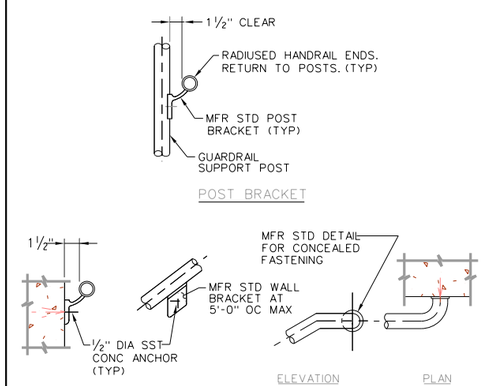

SINGLE RAIL BRACKETS

NOTES:

1. SINGLE RAIL HANDRAIL ON WALLS SHALL MATCH PROFILE SHOWN FOR GUARDRAIL MOUNTED HANDRAIL.
2. SEE GUARDRAIL MOUNTED HANDRAILS FOR HANDRAIL EXTENSION REQUIREMENTS.

S509 TYP — ALUMINUM PICKET TYPE GUARDRAIL

No.	DATE	REVISIONS	APPROVED

DESIGNED: OAA
DRAWN: GMT
CHECKED: OAA

RBF CONSULTING — carollo — IRVINE RANCH WATER DISTRICT

M. OSAMA ABDEL-AAL	RCE NO. 34252	PROJECT MANAGER	DATE
JIM MEYERHOFER	RCE NO. 48451	PROJECT MANAGER	DATE
PATRICIA UEMATSU	RCE NO. 36762	PRINCIPAL ENGINEER	DATE

IRVINE RANCH WATER DISTRICT
BAKER WATER TREATMENT PLANT
PROJECT NO. 11218

STRUCTURAL STANDARD DETAILS - 6

DRAWING S006

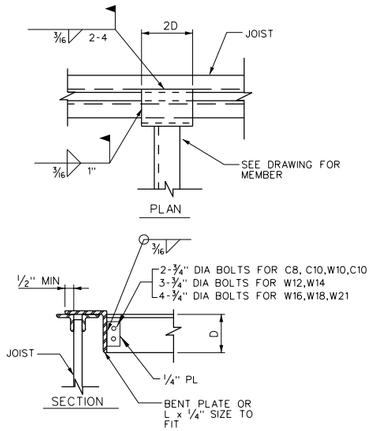

S509 TYP — FRAMING TO JOIST DETAIL

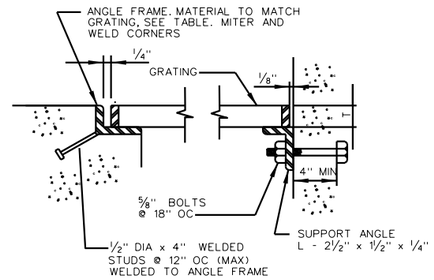

GRATING FRAME TABLE				
GRATING DEPTH T	FRAME ANGLE		GRATING DEPTH T	FRAME ANGLE
1"	1 3/4 x 1/4 x 1/4		2"	*2 1/2 x 2 1/2 x 1/2
1 1/4"	2 x 1 1/2 x 1/4		2 1/4"	2 1/2 x 2 1/2 x 1/4
1 1/2"	1 3/4 x 1 3/4 x 1/4		2 1/2"	3 x 2 1/2 x 1/2
1 3/4"	2 x 2 x 1/4			

* OR USE 2 1/2 x 2 1/2 x 1/4 W/ 1/4" SHIM PLATE WELDED TO BOTTOM

NOTES:

1. GRATING DEPTH TO BE DETERMINED BY MANUFACTURER AND APPROVED BY ENGINEER (UNO)
2. ALL ENDS AND OPENINGS SHALL BE BANDED
3. ALL GRATING SHALL BE SECURED IN PLACE WITH REMOVABLE FASTENERS, SEE DETAIL S-517
4. WEIGHT OF GRATING SECTION SHALL NOT EXCEED 80 LBS
5. BEARING BARS SHALL BE DEPTH T x 3/16" @ 1 3/16" OC CROSS BARS SHALL BE @ 4" OC

S510 TYP — ALUMINUM GRATING

USE ALUMINUM ANGLE SUPPORTS AND STAINLESS STEEL BOLTS

S511 TYP — GALVANIZED STEEL GRATING

USE STEEL ANGLE SUPPORTS AND BOLTS GALVANIZE AFTER FABRICATION

S512 TYP — STAINLESS STEEL GRATING

USE STAINLESS STEEL ANGLE SUPPORTS AND BOLTS

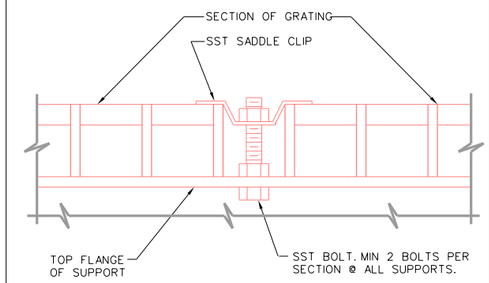

NOTES:

1. GRATING FASTENERS SHALL BE INSTALLED WHERE INDICATED ON THE DRAWINGS.
2. GRATING FASTENERS SHALL BE INSTALLED AT EACH CORNER OF EACH PANEL AND AT SPACING NOT TO EXCEED 8'-0".

S513 TYP — GRATING FASTENERS

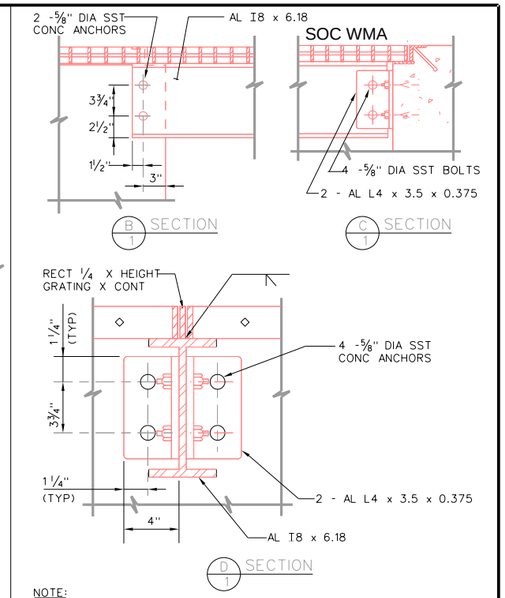

NOTE:

1. COAT ALUMINUM SURFACES IN CONTACT WITH CONCRETE PER SPECS.

S514 TYP — ALUMINUM GRATING SUPPORT

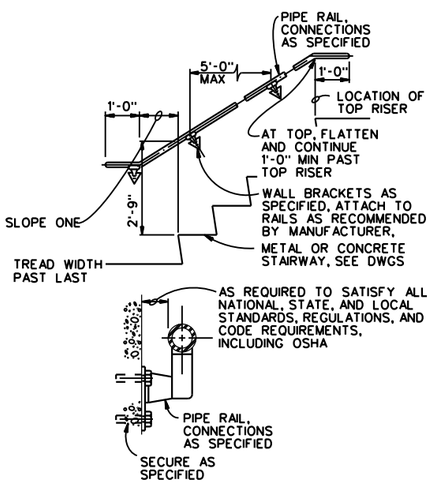

S515 TYP — WALL MOUNTED HANDRAIL DETAIL

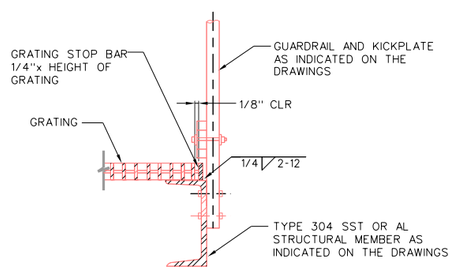

NOTES:

1. GRATING STOP SHALL BE INSTALLED ON ALL GRATING PLATFORMS AND LANDINGS AND SHALL BE CONTINUOUS ON ALL SIDES OF PLATFORMS NOT OTHERWISE COVERED BY A REBATE, SEAT, OR OTHER SIMILAR DETAIL. GRATING STOPS SHALL BE DISCONTINUOUS AT STAIRS BUT SHALL SERVE TO HOLD LANDING PANEL AT STAIRWAYS IN PLACE.
2. GRATING STOP SHALL BE OF THE SAME MATERIAL AS THE STRUCTURAL MEMBER.

S516 TYP — GRATING STOP

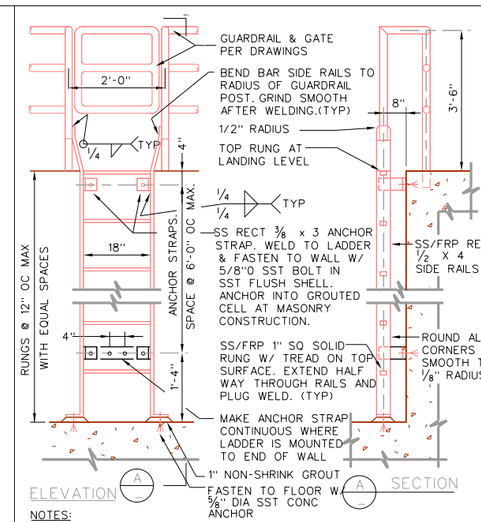

NOTES:

1. INSTALL FALL PREVENTION SYSTEM, OR SAFETY CAGE, WHERE HEIGHT OF LADDER EXCEEDS 20'-0", UNLESS NOTED OTHERWISE.
2. MINIMUM CLEARANCE TO ANY OBSTRUCTION ADJACENT TO LADDER: 2'-6" AT CLIMBING SIDE (2'-3" AT SMOOTH WALL) AND 1'-3" EACH SIDE OF CENTER LINE, AT SIDES OF LADDER.
3. COAT ALL AL SURFACES IN CONTACT WITH CONCRETE OR MASONRY, IN ACCORDANCE WITH THE SPECIFICATIONS.
4. WHERE GUARDRAIL IS SST, BOLT PIPE TO RAIL W/ 2-1/2" DIA SST BOLTS.
5. WHERE SS IS CALLED OUT, PROVIDE TYPE 316.

S517 TYP — FRP/STAINLESS STEEL LADDER FASTENED TO WALL

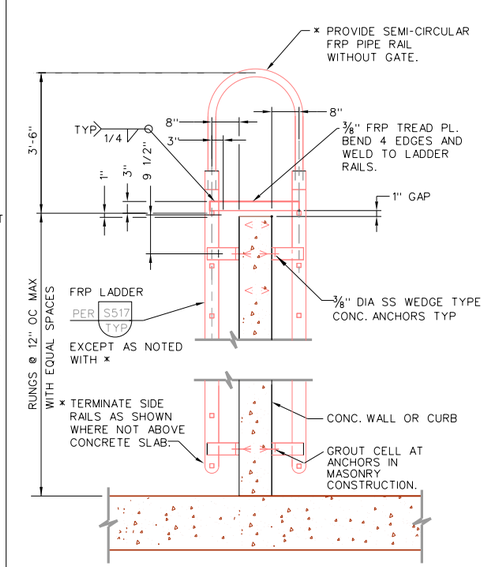

S518 TYP — FRP LADDER OVER CONC. WALL OR CURB

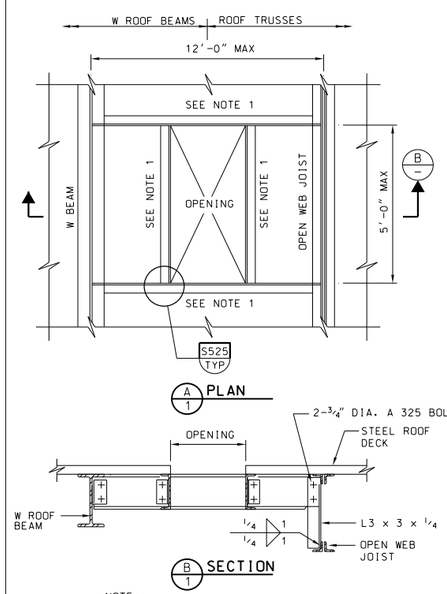

NOTE:

1. SEE ROOF FRAMING PLAN FOR CHANNEL SIZE.

S519 TYP — GRATING FASTENERS

No.	DATE	REVISIONS	APPROVED

DESIGNED: OAA
DRAWN: GMT
CHECKED: OAA

RBF CONSULTING — carollo — IRVINE RANCH WATER DISTRICT

M. OSAMA ABDEL-AAL	RCE NO. 34252	PROJECT MANAGER	DATE
JIM MEYERHOFER	RCE NO. 48451	PROJECT MANAGER	DATE
PATRICIA UEMATSU	RCE NO. 36762	PRINCIPAL ENGINEER	DATE

IRVINE RANCH WATER DISTRICT
BAKER WATER TREATMENT PLANT
PROJECT NO. 11218

STRUCTURAL STANDARD DETAILS - 7

DRAWING S007

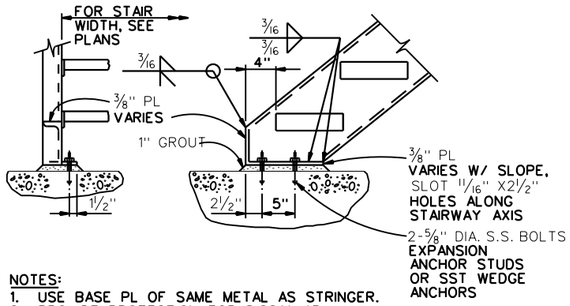

NOTES:
1. USE BASE PL OF SAME METAL AS STRINGER.
2. PROVIDE PROTECTION FOR DISSIMILAR METALS AND CONCRETE AS SPECIFIED.
3. STAIR HANDRAIL NOT SHOWN.

S-520 TYP — TYPICAL STAIR BOTTOM CONNECTION DETAIL

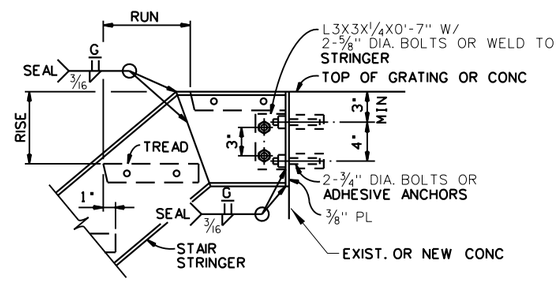

NOTES:
1. HANDRAIL NOT SHOWN.
2. ADHESIVE ANCHORS SHALL BE PREPARED TO EXISTING CONCRETE WALL OR SLAB

S-521 TYP — STAIR TOP CONNECTION DETAIL

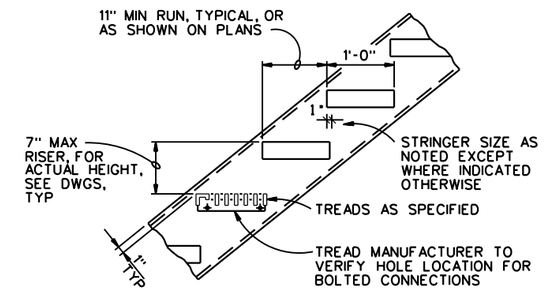

NOTES:
1. USE C12 x 20.7 STRINGERS. USE ALUMINUM C12 x 7.41 WHERE SPECIFICALLY CALLED ON THE DRAWINGS.
2. STAIR HANDRAIL NOT SHOWN.

S-522 TYP — TYPICAL STAIR DETAIL

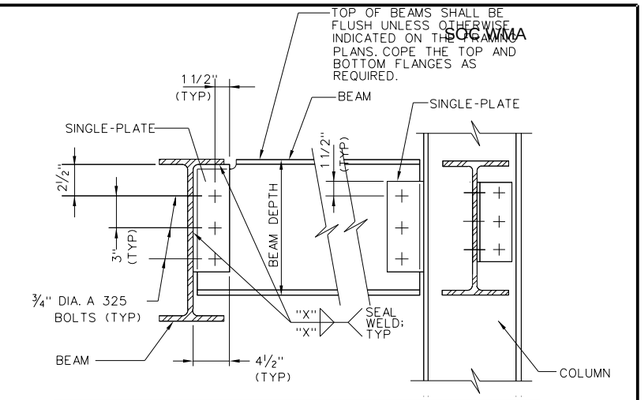

BEAM DEPTH (INCHES)	NUMBER OF BOLTS PER PLATE	PLATE THICKNESS (INCHES)	FILLET WELD SIZE "X" (INCHES)
8-10	2	3/8	1/4
12-16	3	3/8	1/4
18-21	4	3/8	5/16
24-30	6	3/8	5/16

NOTE:
1. SCHEDULE APPLIES TO ALL BEAMS UNLESS NUMBER OF BOLTS PER LEG IS OTHERWISE INDICATED ON THE FRAMING PLAN BY ⬡

S523 TYP — STEEL BEAM TO COLUMN OR BEAM CONNECTION DETAIL

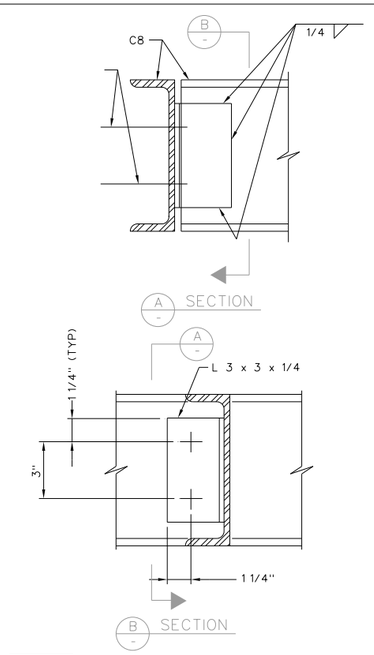

S-525 TYP — STEEL BOLTED CONNECTION

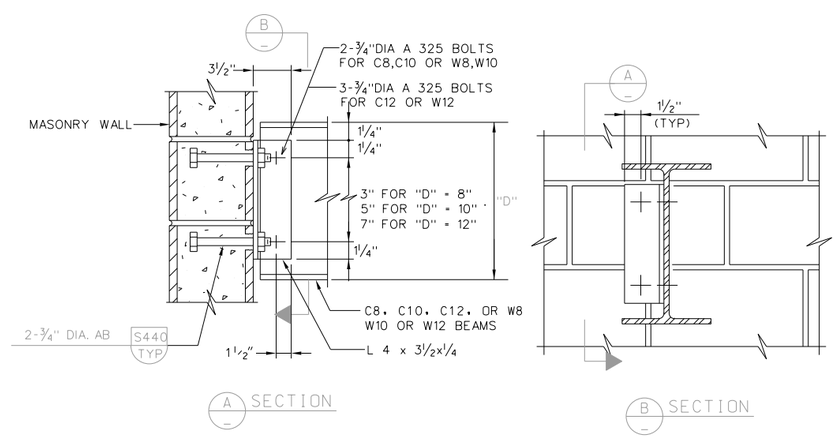

S526 TYP — BEAM TO MASONRY WALL CONNECTION

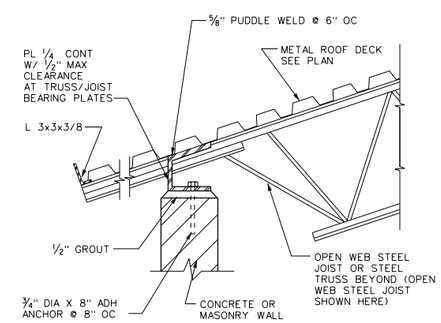

S527 TYP — BENT PLATE CONNECTION BETWEEN TRUSS/JOIST

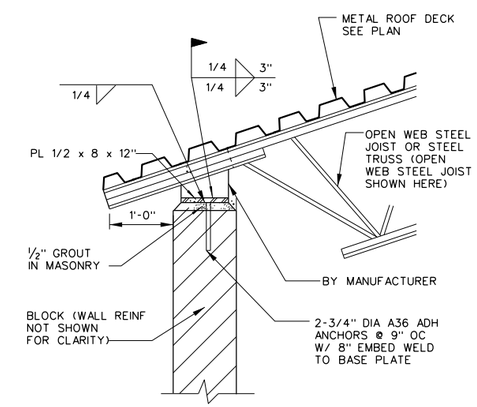

S536 TYP — STEEL TRUSS/JOIST CONNECTION DETAIL

No.	DATE	REVISIONS	APPROVED

DESIGNED: OAA
DRAWN: GMT
CHECKED: OAA

RBF CONSULTING

carollo

IRVINE RANCH WATER DISTRICT

M. OSAMA ABDEL-AAL RCE NO. 34252 PROJECT MANAGER DATE
JIM MEYERHOFER RCE NO. 48451 PROJECT MANAGER DATE
PATRICIA UEMATSU RCE NO. 36762 PRINCIPAL ENGINEER DATE

IRVINE RANCH WATER DISTRICT
BAKER WATER TREATMENT PLANT
PROJECT NO. 11218

STRUCTURAL STANDARD DETAILS - 8

DRAWING S008

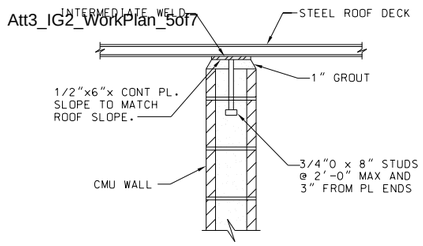

RIBS PERPENDICULAR TO WALL

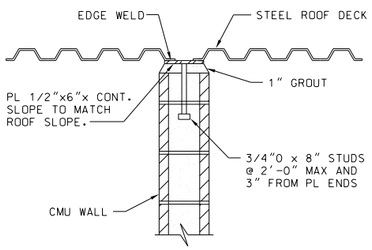

RIBS PARALLEL TO WALL

S528 TYP — ROOF DECK ON INTERIOR MASONRY WALL

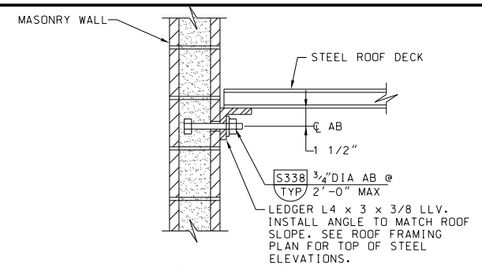

RIBS PERPENDICULAR TO WALL

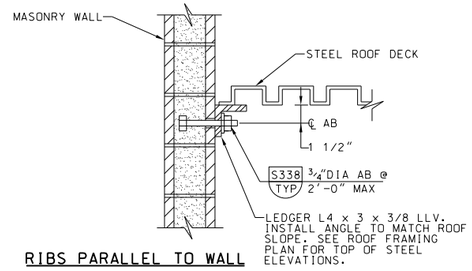

RIBS PARALLEL TO WALL

NOTES:
1. FIRST ANCHOR BOLT AT EACH END OF SECTION OF ANGLE SHALL BE 6" OR LESS FROM END OF ANGLE.
2. ANGLE SHALL STOP AT EACH SIDE OF CONTROL AND EXPANSION JOINTS. GAP BETWEEN ENDS OF ANGLES SHALL EQUAL WIDTH OF JOINT.

S529 TYP — ROOF DECK TO WALL CONNECTION

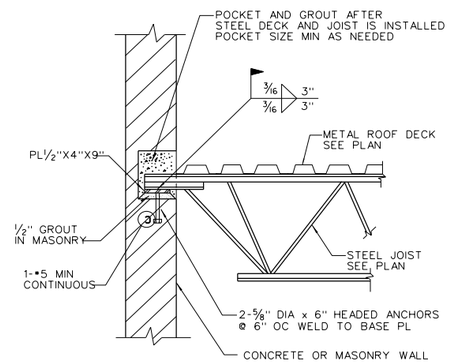

S530 TYP — STEEL JOIST POCKET DETAIL

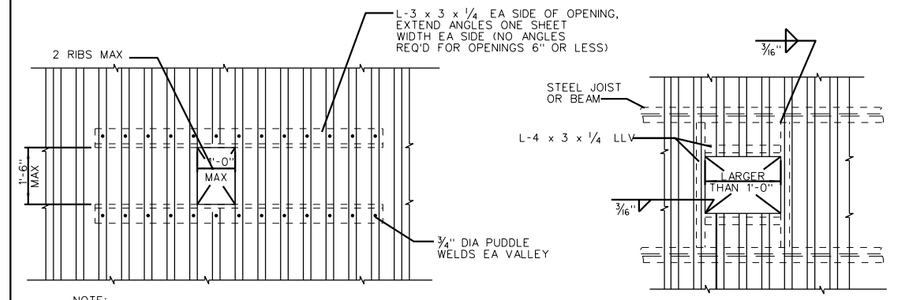

NOTE:
FRAMING TO BE FURNISHED AND INSTALLED BY MISC METALS CONTRACTOR

FRAMING FOR OPENINGS 6" TO 12"

NOTE:
FRAMING TO BE FURNISHED AND INSTALLED BY STRUCTURAL STEEL CONTRACTOR

FRAMING FOR OPENINGS LARGER THAN 12" AND SMALLER THAN 48"

S533 TYP — FRAMING AT METAL DECK OPENINGS

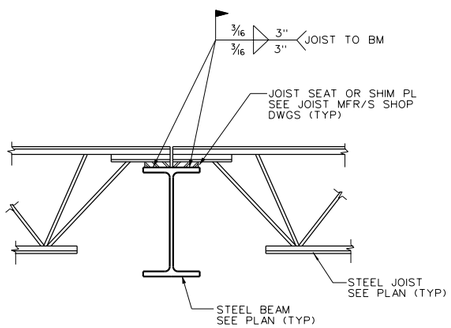

S532 TYP — STL JOIST SEAT TO STL BM DET

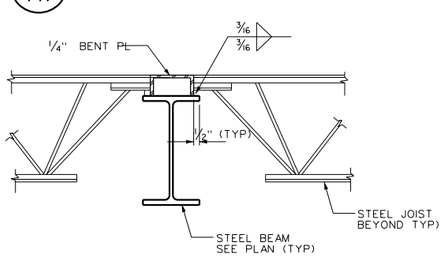

S537 TYP — BENT PLATE CONNECTION BETWEEN TRUSS/ JOIST

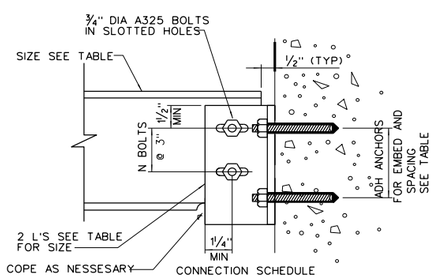

CONNECTION SCHEDULE

BEAM SIZE	DOUBLE ANGLE SIZE	# OF BOLTS N	ADHESIVE ANCHORS (PER ANGLE)			
			NO	SIZE	SPACING	EMBEDMENT
C12	4X4X3/8	2	2	5/8"	6"	5" (MIN)
W14&16	4X4X3/8	3	3	5/8"	6"	5" (MIN)
C8	4X4X3/8	2	2	5/8"	6"	5" (MIN)

S534 TYP — BEAM/CHANNEL TO CONCRETE CONNECTION

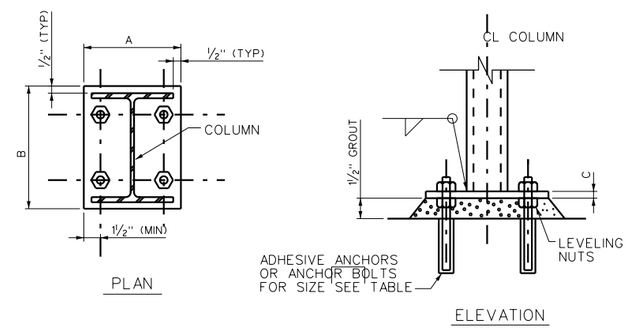

BASE PLATE TYPE	BASE PLATE A X B X C	BOLTS				COMMENTS
		MAT	NUMBER	DIA	EMBED	
W8X31	10"X10"X1"		4	3/4"	8"	
W10X33	12"X12"X1"		4	3/4"	10"	

S531 TYP — STEEL COLUMN BASEPLATE

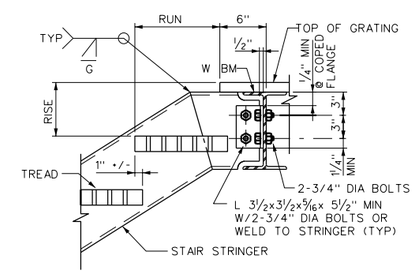

NOTES:
1. FOR BEAM SIZES SEE PLAN
2. HANDRAIL NOT SHOWN
3. COPE STRINGER MIN AS REQ'D

S539 TYP — STAIR TOP TO BEAM CONNECTION

No.	DATE	REVISIONS	APPROVED

DESIGNED: OAA
DRAWN: GMT
CHECKED: OAA

RBF CONSULTING — carollo — IRVINE RANCH WATER DISTRICT

M. OSAMA ABDEL-AAL RCE NO. 34252 PROJECT MANAGER DATE
JIM MEYERHOFER RCE NO. 48451 PROJECT MANAGER DATE
PATRICIA UEMATSU RCE NO. 36762 PRINCIPAL ENGINEER DATE

IRVINE RANCH WATER DISTRICT
BAKER WATER TREATMENT PLANT
PROJECT NO. 11218

STRUCTURAL STANDARD DETAILS - 9

DRAWING S009

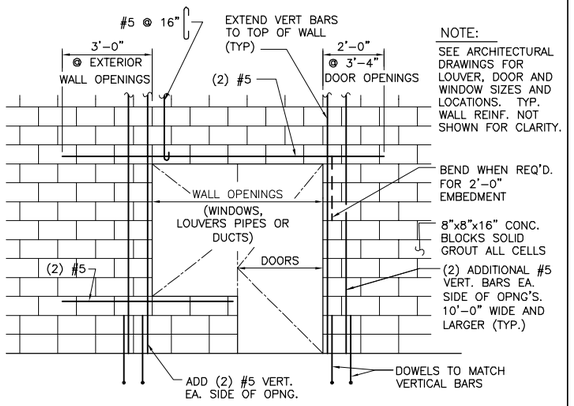

NOTE:
SEE ARCHITECTURAL DRAWINGS FOR LOUVER, DOOR AND WINDOW SIZES AND LOCATIONS. TYP. WALL REINF. NOT SHOWN FOR CLARITY.

DETAIL 1 — TYP REINFORCING AT MASONRY WALL OPENINGS
N.T.S

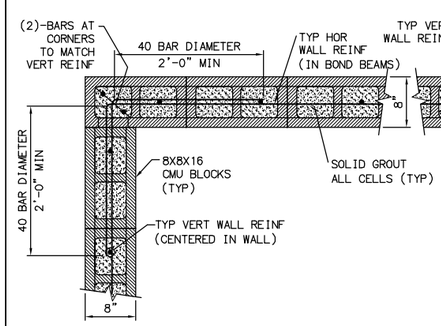

DETAIL 2 — TYP REINFORCING @ MASONRY WALL CORNERS
N.T.S

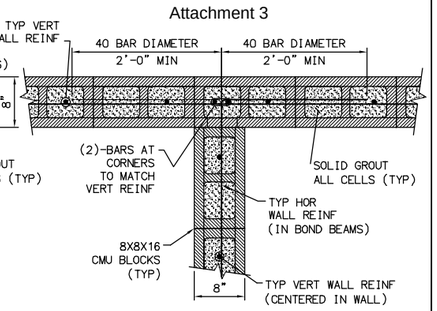

DETAIL 3 — TYP REINFORCING @ MASONRY WALL INTERSECTIONS
N.T.S

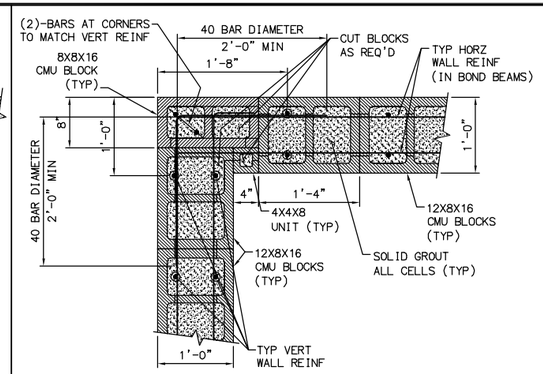

DETAIL 6 — TYP REINFORCING @ MASONRY WALL CORNERS
N.T.S

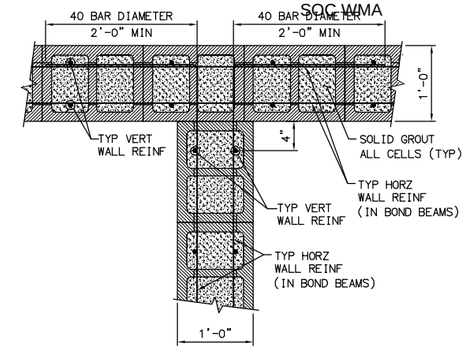

DETAIL 7 — TYP REINFORCING @ MASONRY WALL INTERSECTIONS
N.T.S

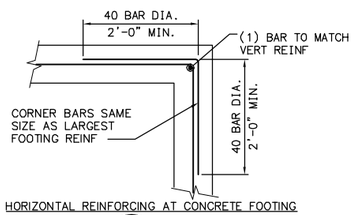

HORIZONTAL REINFORCING AT CONCRETE FOOTING

DETAIL 4 — TYP REINFORCING @ CONCRETE CORNERS
N.T.S

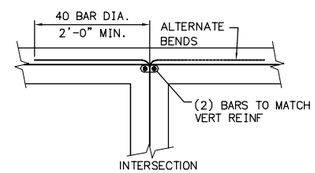

HORIZONTAL REINFORCING AT CONCRETE FOOTING

DETAIL 5 — TYP REINFORCING @ CONCRETE WALL INTERSECTION
N.T.S

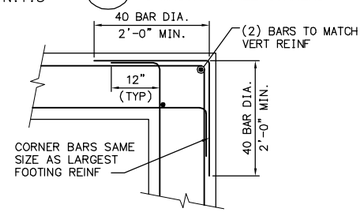

HORIZONTAL REINFORCING AT CONCRETE FOOTING

DETAIL 8 — TYP REINFORCING @ CONCRETE CORNERS
N.T.S

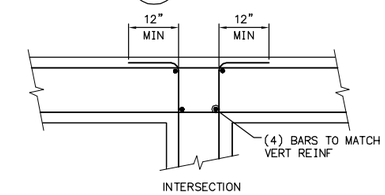

HORIZONTAL REINFORCING AT CONCRETE FOOTING

DETAIL 9 — TYP REINFORCING @ CONCRETE WALL INTERSECTION
N.T.S

BAR SIZE	LAP SPLICES INTO CONCRETE f'c = 4,000 psi		LAP SPLICES INTO MASONRY f'm = 1,500 psi
	TOP BARS	OTHER BARS	
4	32"	25"	36"
5	40"	31"	45"
6	48"	37"	54"
7	60"	48"	63"

NOTES:
1. TOP BAR IS THE BAR WITH MORE THAN 12" CONCRETE CAST IN ONE LIFT BENEATH IT.
2. SPLICES IN HORIZONTAL AND VERTICAL BARS SHALL BE STAGGERED.
3. UNLESS OTHERWISE DETAILED ON THE DRAWINGS, SPLICES IN TWO CURTAINS SHALL NOT OCCUR IN THE SAME LOCATION.
4. BARS NOTED "CONT" AND TYPICAL WALL REINFORCING SHALL HAVE A MINIMUM SPLICE EQUAL TO THE STANDARD LAP SPLICE UNLESS OTHERWISE SHOWN ON THE DRAWINGS.

DETAIL 10 — REINFORCING LAP SCHEDULE
N.T.S

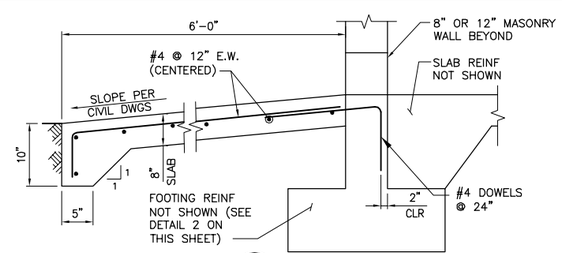

DETAIL 11 — CONCRETE RAMP
N.T.S

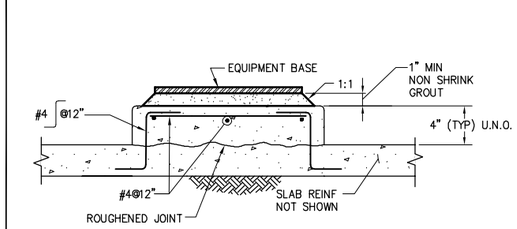

DETAIL 12 — EQUIPMENT PAD REINFORCING
N.T.S

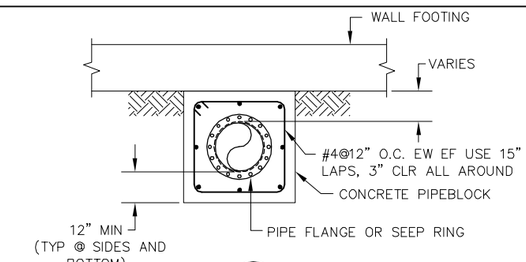

DETAIL 13 — PIPE BLOCK ENCASEMENT DETAIL
N.T.S

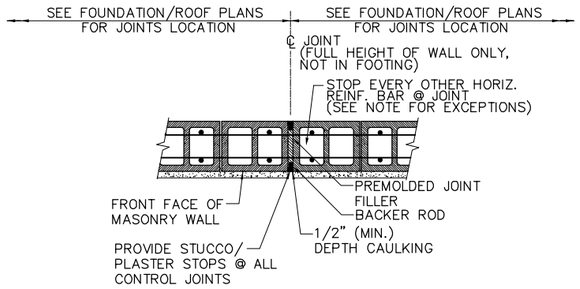

NOTE:
CHORD REINFORCING AND HORIZONTAL REINFORCING AT LINTELS SHALL BE CONTINUOUS THROUGH THE JOINT, AND SHALL NOT BE CUT.

DETAIL 14 — TYP MASONRY WALL CONTROL JOINT
N.T.S

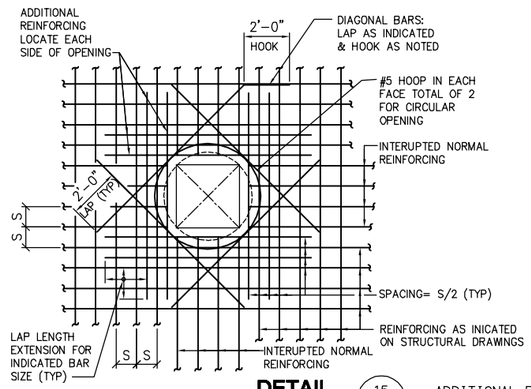

NOTES:
1. NUMBER OF ADDITIONAL REINFORCING BARS EACH SIDE OF OPENING SHALL EQUAL 1/2 THE NUMBER OF INTERRUPTED BARS IN EACH LAYER OF REINFORCING.
2. SIZE OF ADDITIONAL REINFORCING BARS TO EQUAL SIZE OF INTERRUPTED REINFORCING BARS.
3. PROVIDE STANDARD HOOK ON BARS IF LAP LENGTH EXTENSION CANNOT BE OBTAINED OR AT JOINTS OR OTHER OBSTRUCTIONS. PLACE ADDITIONAL BARS IN SAME PLANES AS INTER- RUPTED REINFORCING.
4. UNLESS NOTED OTHERWISE. SIZE OF DIAGONAL BARS SHALL BE THE SIZE OF THE LARGEST NORMAL REINFORCING BAR CUT. LOCATE DIAGONAL IN EACH LAYER OF REINFORCING.
5. PLACE DIAGONAL BARS INSIDE INDICATED REINFORCING.
6. SPECIAL OPENING CONDITIONS SHALL BE AS INDICATED ON THE DRAWINGS OR AS DIRECTED BY THE ENGINEER.
7. ALL REINFORCING TO CLEAR OPENING OR FLANGE COLLARS BY 2".

DETAIL 15 — ADDITIONAL REINFORCING @ OPENINGS
N.T.S

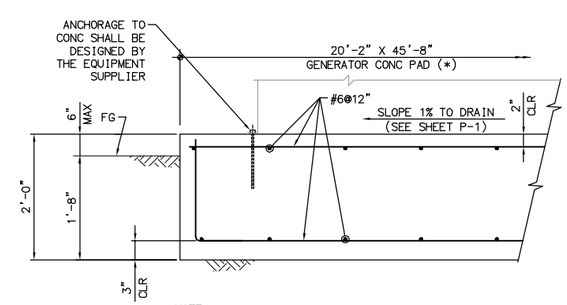

NOTE:
CONTRACTOR SHALL VERIFY/COORDINATE DIMENSIONS MARKED WITH (*) PER MANUFACTURER'S EQUIPMENT SHOP DRAWINGS.

DETAIL 16 — GENERATOR CONCRETE PAD DETAIL
N.T.S

FILENAME: 6232-S010.dwg
LAST UPDATED: 02/01/2012 03:18 PM
LAST SAVED BY: chess

No.	DATE	REVISIONS	APPROVED

DESIGNED: FSD
DRAWN: CS
CHECKED: SMS

RBF CONSULTING

carollo

IRVINE RANCH WATER DISTRICT

SALAHUDDIN M. SHEIKH	RCE NO. 32677	STRUCTURAL ENGINEER	DATE
CINDY MILLER	RCE NO. 58116	PROJECT MANAGER	DATE
PATRICIA UEMATSU	RCE NO. 36762	PRINCIPAL ENGINEER	DATE

IRVINE RANCH WATER DISTRICT
BAKER WATER TREATMENT PLANT
PROJECT NO. 11218

STRUCTURAL STANDARD - DETAILS I

DRAWING S010
SHEET 178 OF 632

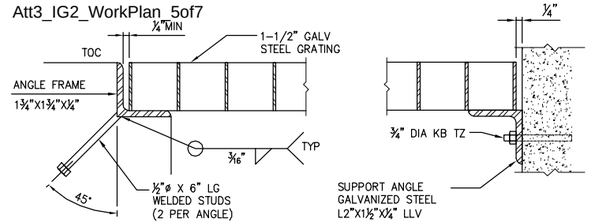

NOTES:

1. ALL GRATING SHALL BE GALVANIZED STEEL UNLESS OTHERWISE NOTED.
2. ALL ENDS AND OPENINGS SHALL BE BANDED.
3. ALL GRATING SHALL BE SECURED IN PLACE WITH REMOVABLE FASTENERS.

DETAIL 1 – STEEL GRATING
N.T.S

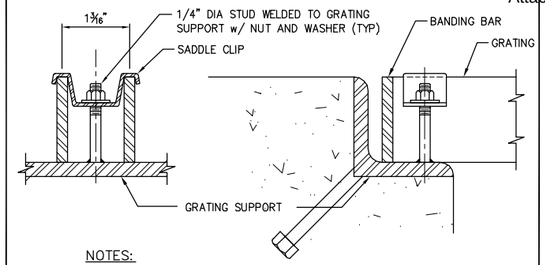

NOTES:

1. PROVIDE 2 CLIPS PER GRATING PANEL, APPROXIMATELY 4 INCHES FROM PANEL CORNERS. MAXIMUM CLIP SPACING AT 36 INCHES O.C.
2. STUD, NUT, WASHER AND CLIP TO BE THE SAME MATERIAL AS THE GRATING.

DETAIL 2 – GRATING ANCHOR
N.T.S

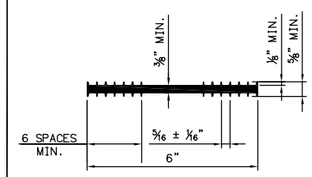

DETAIL 3 – 6" FLATSTRIP WATERSTOP
N.T.S

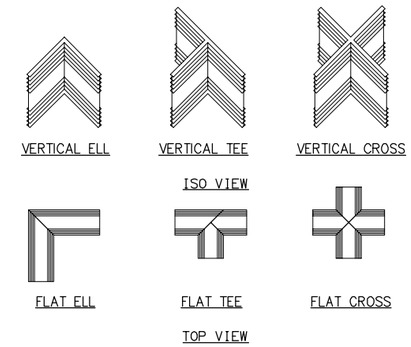

DETAIL 4 – PREFABRICATED WATERSTOP JOINTS
N.T.S

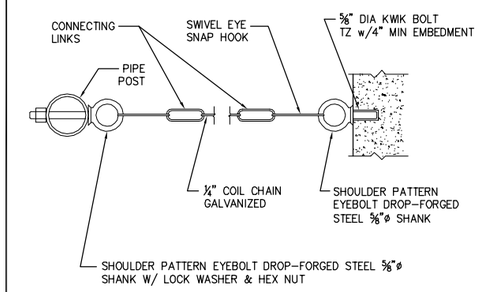

DETAIL 5 – SAFETY CHAIN CONNECTION
N.T.S

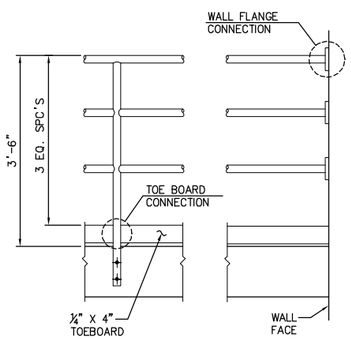

HANDRAIL SHALL BE 1½" SCHEDULE 40 STANDARD PIPE AND POSTS GALVANIZED AFTER FABRICATION

DETAIL 6 – STEEL RAILING
N.T.S

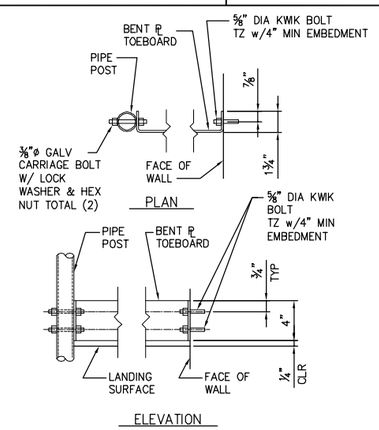

DETAIL 7 – TOE BOARD CONNECTION
N.T.S

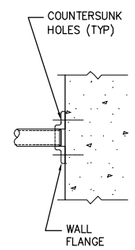

HANDRAIL SHALL BE 1½" SCHEDULE 40 STANDARD PIPE AND POSTS GALVANIZED AFTER FABRICATION

DETAIL 8 – WALL FLANGE CONNECTION
N.T.S

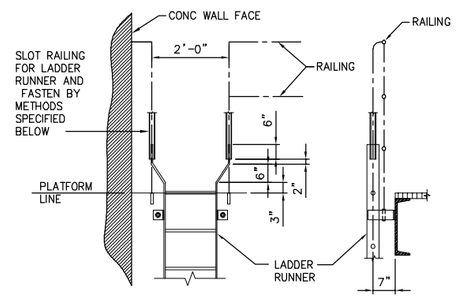

CONNECTIONS:
STEEL TO STEEL: WELDED CONNECTION, GRIND SMOOTH.

DETAIL 9 – LADDER TO RAILING CONNECTION DETAIL
N.T.S

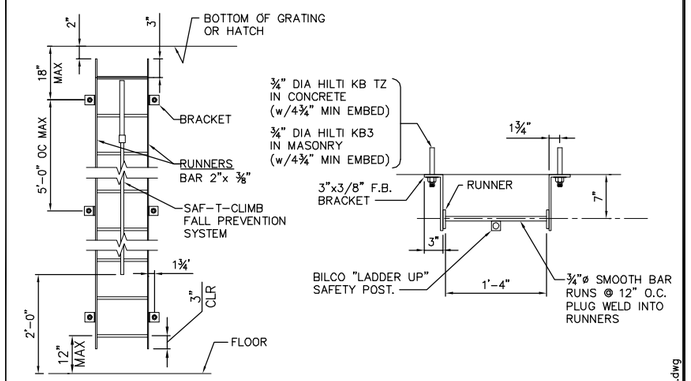

DETAIL 10 – LADDER
N.T.S

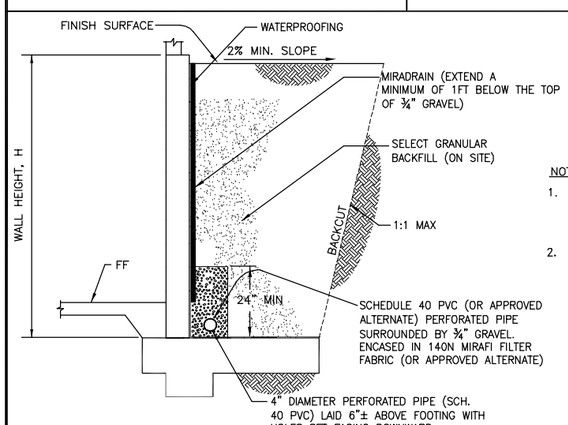

NOTES:

1. CONNECT DRAIN PIPE TO DRAINAGE SYSTEM PER CIVIL DRAWINGS OR TO DAYLIGHT SO THAT PIPE SHALL DRAIN FREELY AT ALL TIMES. SYSTEM SHALL NOT DRAIN OVER ADJACENT PROPERTY.
2. WATERPROOFING SHALL BE ASPHALT MEMBRANE WATERPROOFING SUCH AS BITUTHENE 3000 AS MANUFACTURED BY W.R. GRACE & CO. OR APPROVED EQUAL. APPLICATION AND MEMBRANE PROTECTION SHALL BE PER MANUFACTURER'S RECOMMENDATIONS. PROTECTIVE BOARD SHALL BE USED PRIOR TO BACKFILLING.

DETAIL 11 – TYPICAL WALL DRAINAGE DETAIL
N.T.S

FILENAME: 6232-S011.dwg
LAST UPDATED: 01/25/2012 09:09 AM
LAST SAVED BY: csteleg

No.	DATE	REVISIONS	APPROVED

DESIGNED: FSD
DRAWN: CS
CHECKED: SMS

RBF CONSULTING
carollo
IRVINE RANCH WATER DISTRICT

SALAHUDDIN M. SHEIKH	RCE NO. 32677	STRUCTURAL ENGINEER	DATE
CINDY MILLER	RCE NO. 58116	PROJECT MANAGER	DATE
PATRICIA UEMATSU	RCE NO. 36762	PRINCIPAL ENGINEER	DATE

IRVINE RANCH WATER DISTRICT
BAKER WATER TREATMENT PLANT
PROJECT NO. 11218

STRUCTURAL DETAILS II

DRAWING **S011**
SHEET 179 OF 632

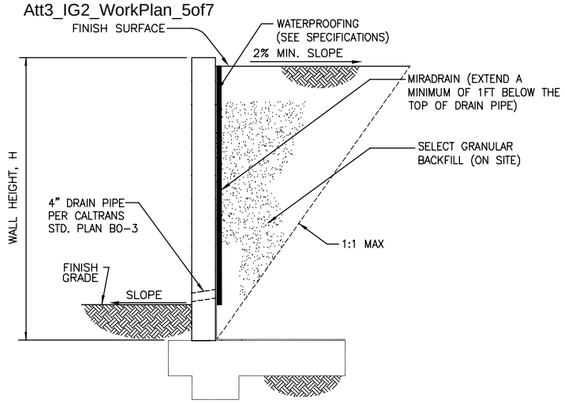

1 TYPICAL WALL DRAINAGE DETAIL

NO SCALE

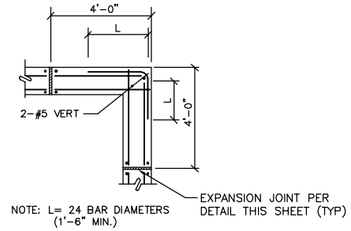

2 CONCRETE WALL CORNER REINF. DETAIL

NO SCALE

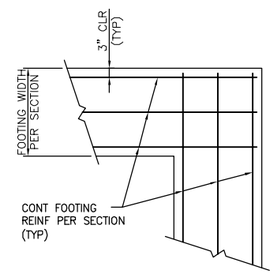

3 TYPICAL FOOTING INTERSECTION DETAIL

NO SCALE

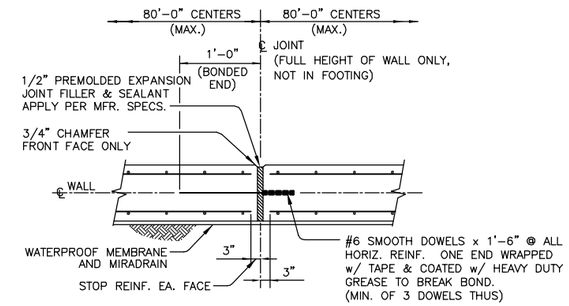

PLAN SECTION

4 TYPICAL CONCRETE WALL EXPANSION JOINT

NO SCALE

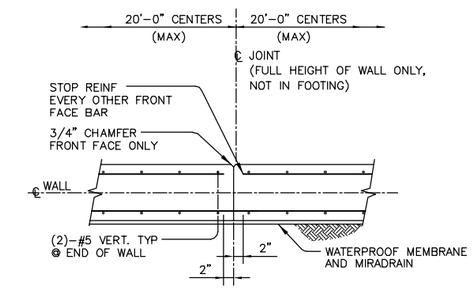

PLAN SECTION

5 TYPICAL CONCRETE WALL CONTROL JOINT

NO SCALE

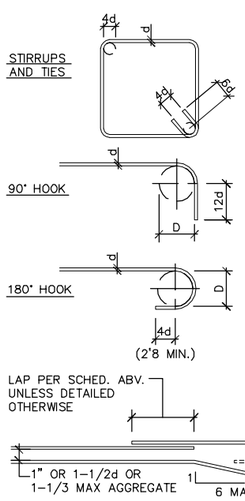

LAP SCHEDULE

f'c = 4,000 psi
Fy = 60,000 psi

BAR SIZE	TOP BARS	OTHER BARS
#3	2'-7"	2'-0"
#4	3'-8"	2'-9"
#5	4'-6"	3'-6"
#6	5'-4"	4'-1"
#7	7'-7"	5'-10"
#8	8'-8"	6'-8"
#9	9'-10"	7'-6"
#10	11'-0"	8'-6"
#11	12'-2"	9'-4"

BEND SCHEDULE

BAR SIZES	D
#3 THRU #8	6d
#9 THRU #11	8d

d = DIAMETER OF REINF. BAR

6 REINFORCEMENT DETAILS

NO SCALE

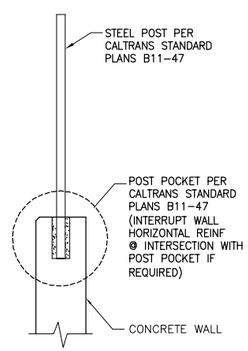

7 STEEL POST CONNECTION TO CONCRETE WALL

NO SCALE

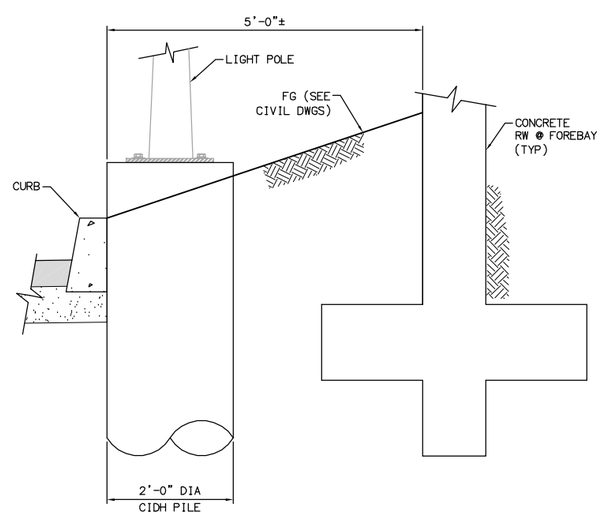

8 CIDH FOOTING @ FOREBAY CONCRETE RW WALL

NO SCALE

No.	DATE	REVISIONS	APPROVED

DESIGNED: CS
DRAWN: CS
CHECKED: SMS

RBF CONSULTING

carollo

IRVINE RANCH WATER DISTRICT

SALAHUDDIN M. SHEIKH	RCE NO. 32677	STRUCTURAL ENGINEER	DATE
CINDY MILLER	RCE NO. 58116	PROJECT MANAGER	DATE
PATRICIA UEMATSU	RCE NO. 36762	PRINCIPAL ENGINEER	DATE

IRVINE RANCH WATER DISTRICT
BAKER WATER TREATMENT PLANT
PROJECT NO. 11218

RETAINING WALLS STRUCTURAL DETAILS

DRAWING
S020
SHEET
180 OF 632

FILENAME: 6232-S020.dwg
LAST UPDATED: 01/26/2012 09:50 AM
LAST SAVED BY: csteleo

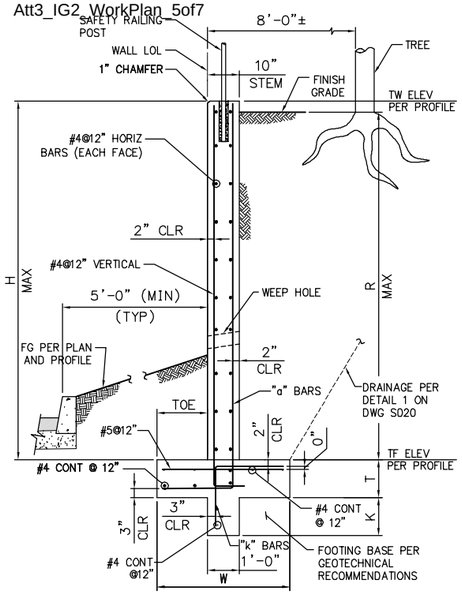

WALL SCHEDULE							
H MAX	R MAX	W	TOE	T	K	"a" BARS	"k" BARS
10'-6"	10'-0"	5'-9"	4'-0"	1'-2"	3'-7"	#7@12"	#6@12"
8'-6"	8'-0"	4'-9"	2'-9"	1'-2"	2'-8"	#6@12"	#6@12"
6'-6"	6'-0"	3'-6"	1'-6"	1'-0"	1'-6"	#5@12"	#5@12"
4'-6"	4'-0"	3'-0"	1'-0"	1'-0"	9"	#5@12"	#5@12"

1 RETAINING WALL SECTION @ FOREBAY - WALL A (TYPE 1)

NO SCALE

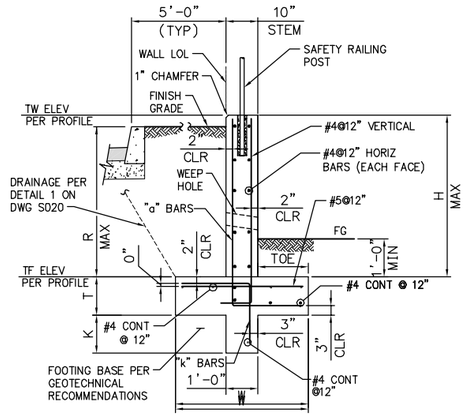

WALL SCHEDULE							
H MAX	R MAX	W	TOE	T	K	"a" BARS	"k" BARS
7'-6"	7'-0"	4'-3"	2'-3"	1'-0"	3'-2"	#5@12"	#5@12"
4'-6"	4'-0"	3'-0"	1'-0"	1'-0"	1'-5"	#5@12"	#5@12"

2 RETAINING WALL SECTION @ FOREBAY - WALL A (TYPE 2)

NO SCALE

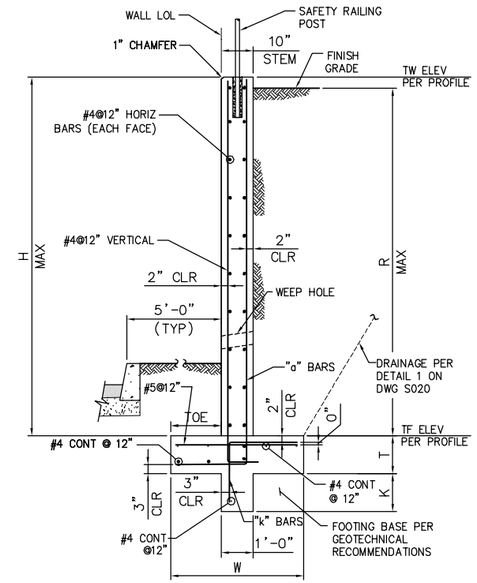

WALL SCHEDULE							
H MAX	R MAX	W	TOE	T	K	"a" BARS	"k" BARS
7'-6"	7'-0"	3'-9"	1'-0"	1'-0"	2'-0"	#5@12"	#5@12"
4'-6"	4'-0"	3'-0"	1'-0"	1'-0"	9"	#5@12"	#5@12"

3 RETAINING WALL SECTION @ FOREBAY - WALL A (TYPE 3)

NO SCALE

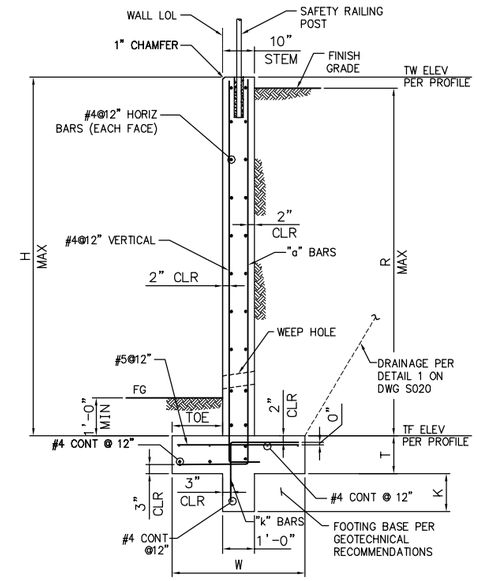

WALL SCHEDULE							
H MAX	R MAX	W	TOE	T	K	"a" BARS	"k" BARS
10'-6"	10'-0"	6'-0"	4'-0"	1'-2"	4'-10"	#6@12"	#6@12"
8'-6"	8'-0"	5'-4"	4'-0"	1'-2"	4'-2"	#6@12"	#6@12"
6'-6"	6'-0"	4'-4"	3'-0"	1'-0"	2'-10"	#5@12"	#5@12"
4'-6"	4'-0"	2'-10"	1'-6"	1'-0"	1'-9"	#5@12"	#5@12"

4 RETAINING WALL SECTION @ TCWD PUMP STATION - WALLS B & C

NO SCALE

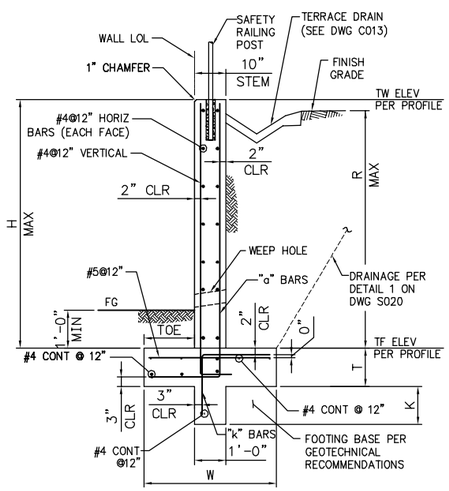

WALL SCHEDULE							
H MAX	R MAX	W	TOE	T	K	"a" BARS	"k" BARS
6'-6"	6'-0"	3'-9"	1'-9"	1'-0"	1'-6"	#5@12"	#5@12"
4'-6"	4'-0"	3'-0"	1'-0"	1'-0"	9"	#5@12"	#5@12"

5 RETAINING WALL SECTION @ PRODUCT WATER PUMP STATION - WALL D

NO SCALE

LAST SAVED BY: csteleo LAST UPDATED: 01/19/2012 01:18 PM FILENAME: 6232-S021.dwg

No.	DATE	REVISIONS	APPROVED

DESIGNED: CS
DRAWN: CS
CHECKED: SMS

RBF CONSULTING

carollo

IRVINE RANCH WATER DISTRICT

SALAHUDDIN M. SHEIKH RCE NO. 32677 STRUCTURAL ENGINEER DATE
CINDY MILLER RCE NO. 58116 PROJECT MANAGER DATE
PATRICIA UEMATSU RCE NO. 36762 PRINCIPAL ENGINEER DATE

IRVINE RANCH WATER DISTRICT
BAKER WATER TREATMENT PLANT
PROJECT NO. 11218

RETAINING WALLS STRUCTURAL SECTIONS

DRAWING S021

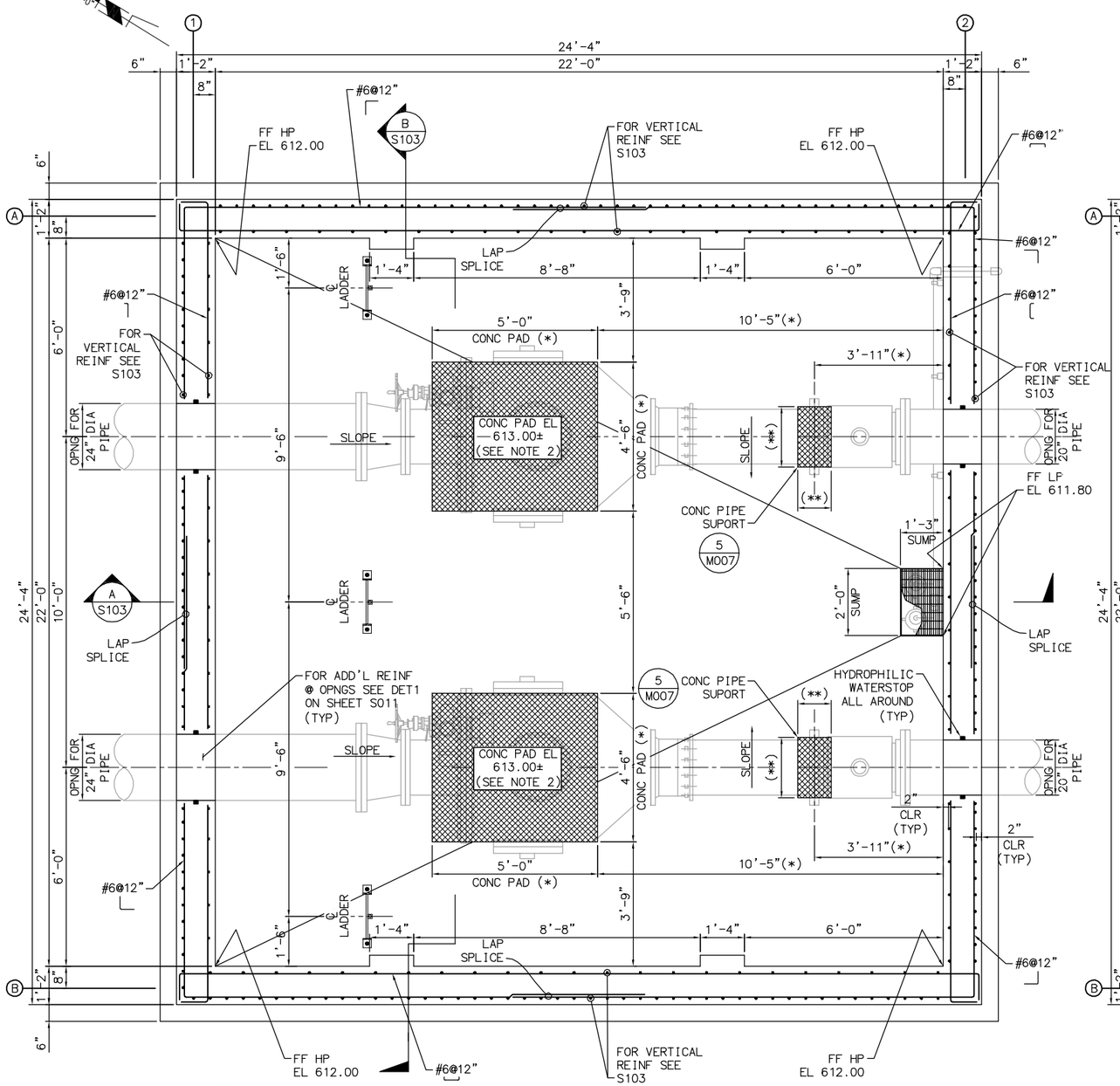

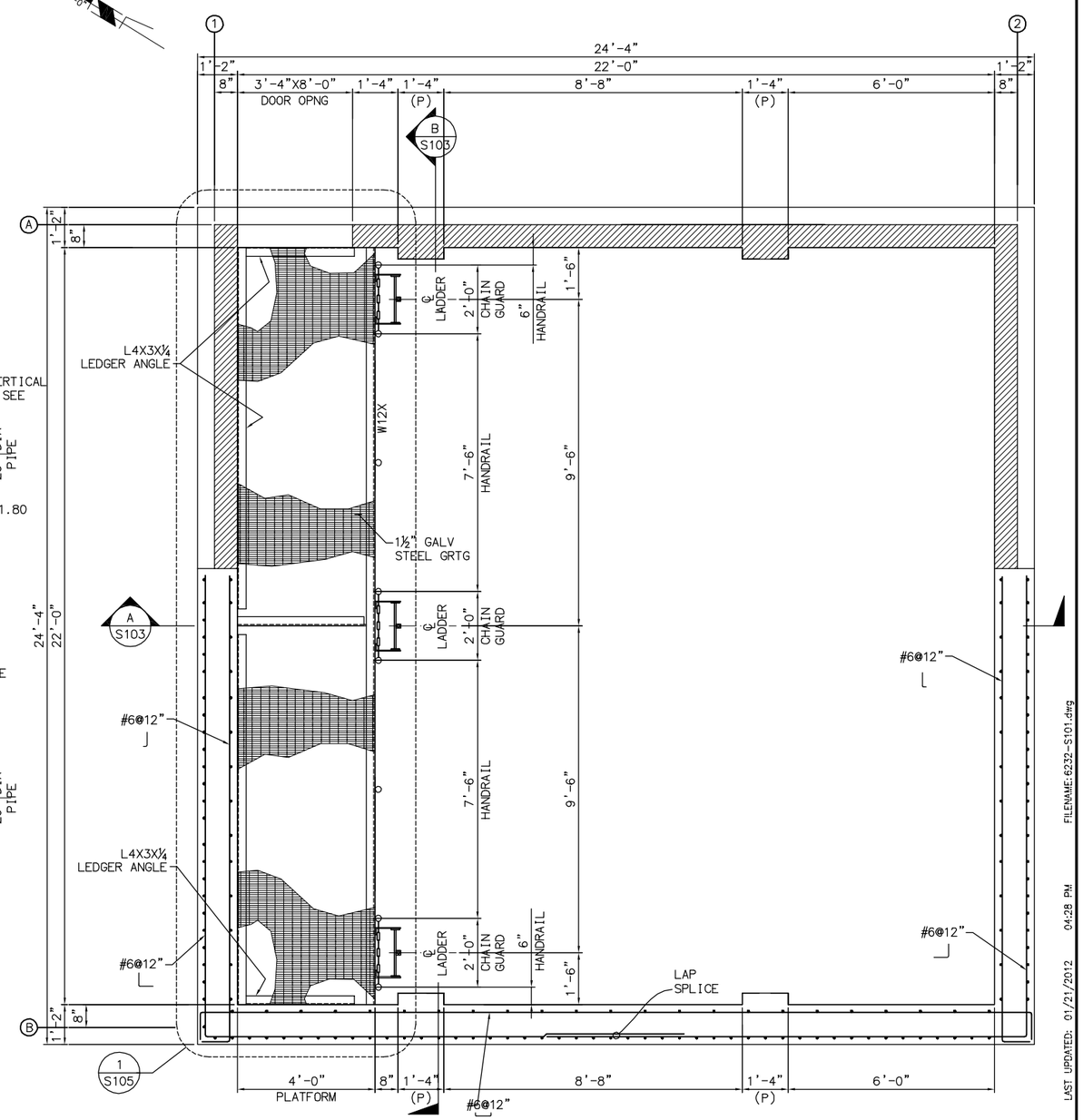

NOTES:

1. CONTRACTOR SHALL VERIFY DIMENSIONS MARKED WITH (*) PER VALVE/PIPING AND EQUIPMENT MANUFACTURER'S SHOP DRAWINGS.
2. CONTRACTOR TO DETERMINE T/CONC PAD ELEVATION BASED ON VALVE MANUFACTURER'S SHOP DRAWINGS.
3. DIMENSIONS MARKED WITH (**) SHALL BE PER DETAIL 5 ON DRAWING M007.

LEGEND:

- CONCRETE PAD
- GRATING
- (P) 12"X16" CMU PILASTER

FOUNDATION/FLOOR PLAN

SCALE: 1/2"=1'-0"

PLAN AT PLATFORM EL. 618.00

SCALE: 1/2"=1'-0"

LAST SAVED BY: cstelec LAST UPDATED: 01/21/2012 04:28 PM FILENAME: 6232-S101.dwg

No.	DATE	REVISIONS	APPROVED

DESIGNED: FSD
DRAWN: CS
CHECKED: SMS

RBF CONSULTING

carollo

IRVINE RANCH WATER DISTRICT

SALAHUDDIN M. SHEIKH	RCE NO. 32677	STRUCTURAL ENGINEER	DATE
CINDY MILLER	RCE NO. 58116	PROJECT MANAGER	DATE
PATRICIA UEMATSU	RCE NO. 36762	PRINCIPAL ENGINEER	DATE

IRVINE RANCH WATER DISTRICT
BAKER WATER TREATMENT PLANT
PROJECT NO. 11218

FLOW CONTROL FACILITY
FOUNDATION AND PLATFORM PLANS

DRAWING S101

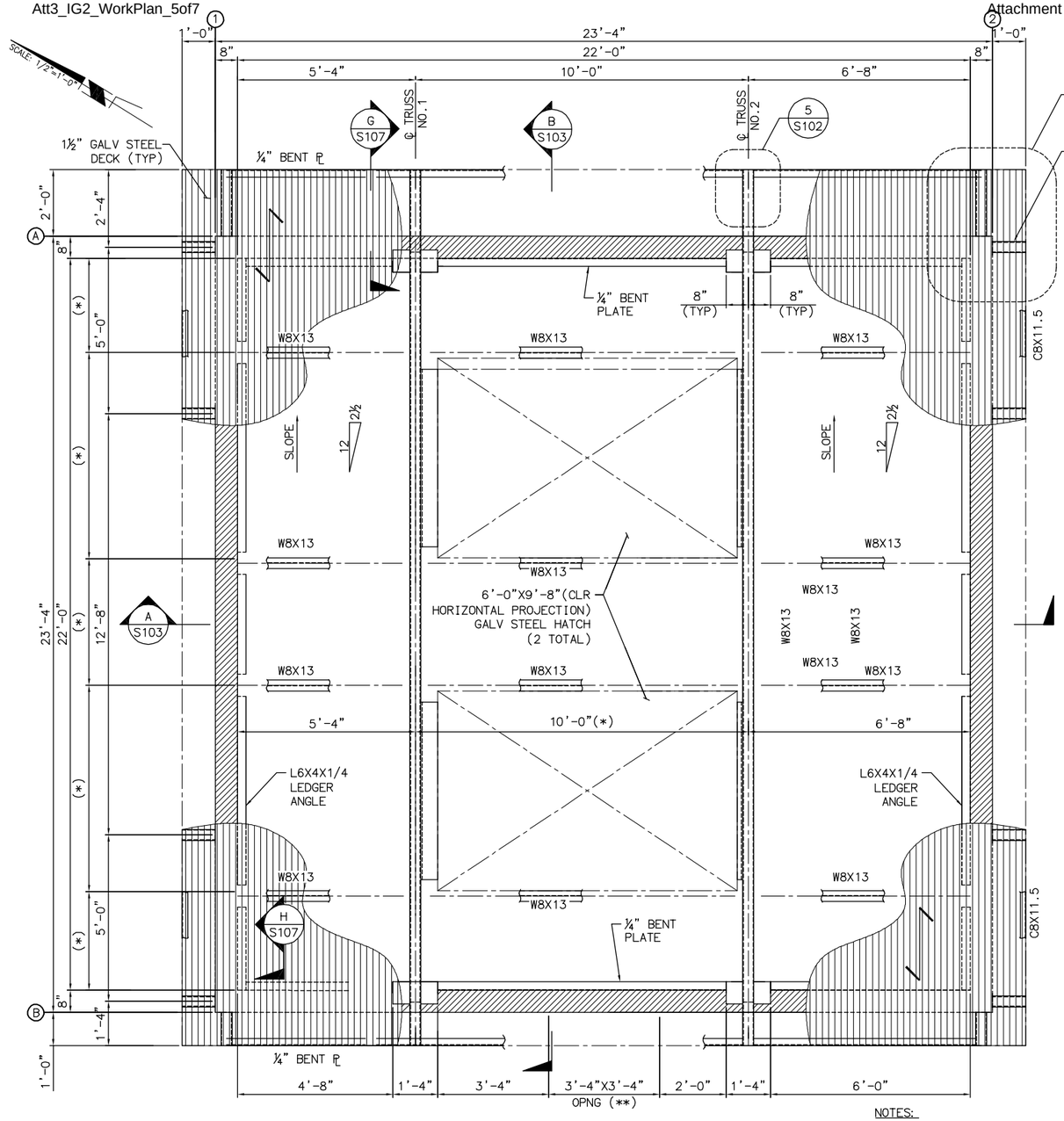

ROOF PLAN

SCALE: 1/2"=1'-0"

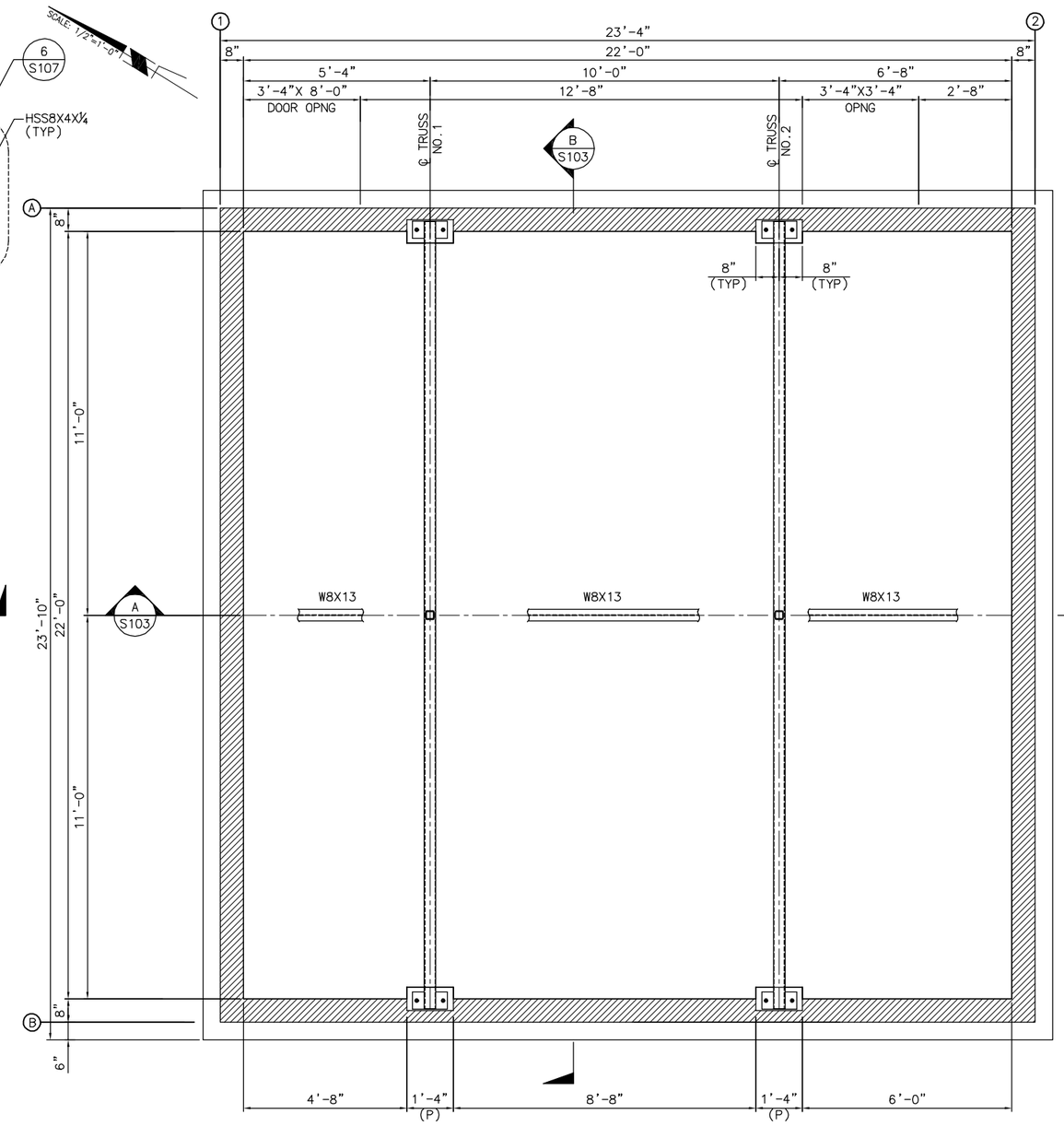

ROOF TRUSS BOTTOM CHORD PLAN

SCALE: 1/2"=1'-0"

LEGEND:

- 8" CMU WALL
- GALV STEEL METAL DECK
- (P) 12"X16" CMU PILASTER

NOTES:

1. STEEL DECK: 1½" HSB-36 20 GA-GALVANIZED
2. ROOF DECK ATTACHMENTS:
   7 WELDS PER SHEET @ SUPPORTS
   ½" PUDDLE WELDS AT 12" c/c AT EDGES PARALLEL TO SPAN.
   1½" TOP SEAM WELD AT 12" c/c.
3. DENOTES DECK ORIENTATION.
4. CONTRACTOR TO VERIFY DIMENSIONS MARKED WITH EQUIPMENT SHOP DRAWINGS AND LOCATION.

No.	DATE	REVISIONS	APPROVED

DESIGNED: FSD
DRAWN: CS
CHECKED: SMS

RBF CONSULTING

carollo

IRVINE RANCH WATER DISTRICT

SALAHUDDIN M. SHEIKH RCE NO. 32677 STRUCTURAL ENGINEER DATE
CINDY MILLER RCE NO. 58116 PROJECT MANAGER DATE
PATRICIA UEMATSU RCE NO. 36762 PRINCIPAL ENGINEER DATE

IRVINE RANCH WATER DISTRICT
BAKER WATER TREATMENT PLANT
PROJECT NO. 11218

FLOW CONTROL FACILITY
ROOF PLAN AND SECTIONS

DRAWING S102
SHEET 183 OF 632

LAST SAVED BY: aretano LAST UPDATED: 02/01/2012 03:26 PM FILENAME: 6232-S102.dwg

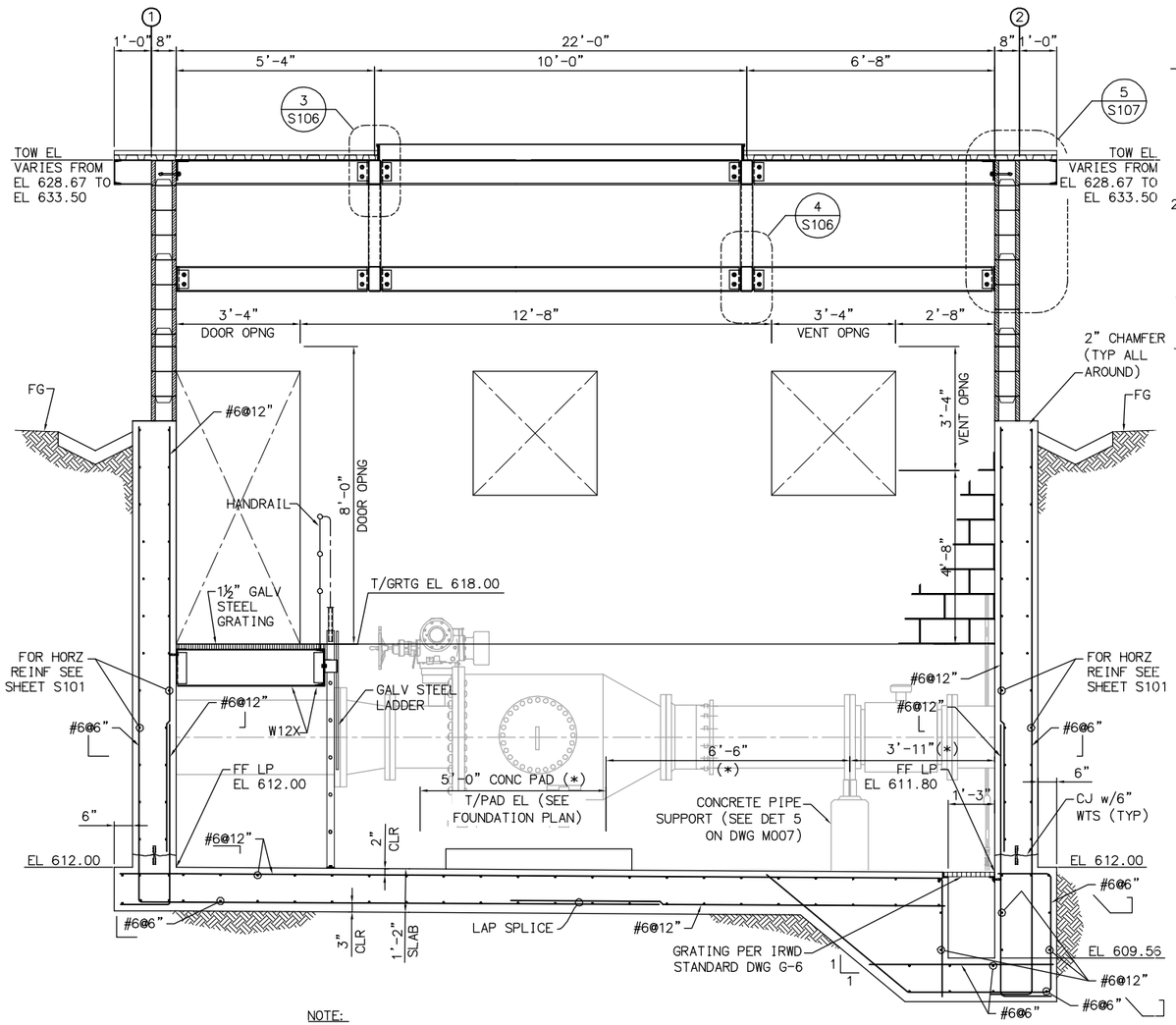

NOTE:
CONTRACTOR TO DETERMINE DIMENSIONS MARKED WITH (*)AND
T/CONC PAD ELEVATION BASED ON VALVE MANUFACTURER'S SHOP DRAWINGS.

SECTION A S101 / A S102
SCALE: 1/2" = 1'-0"

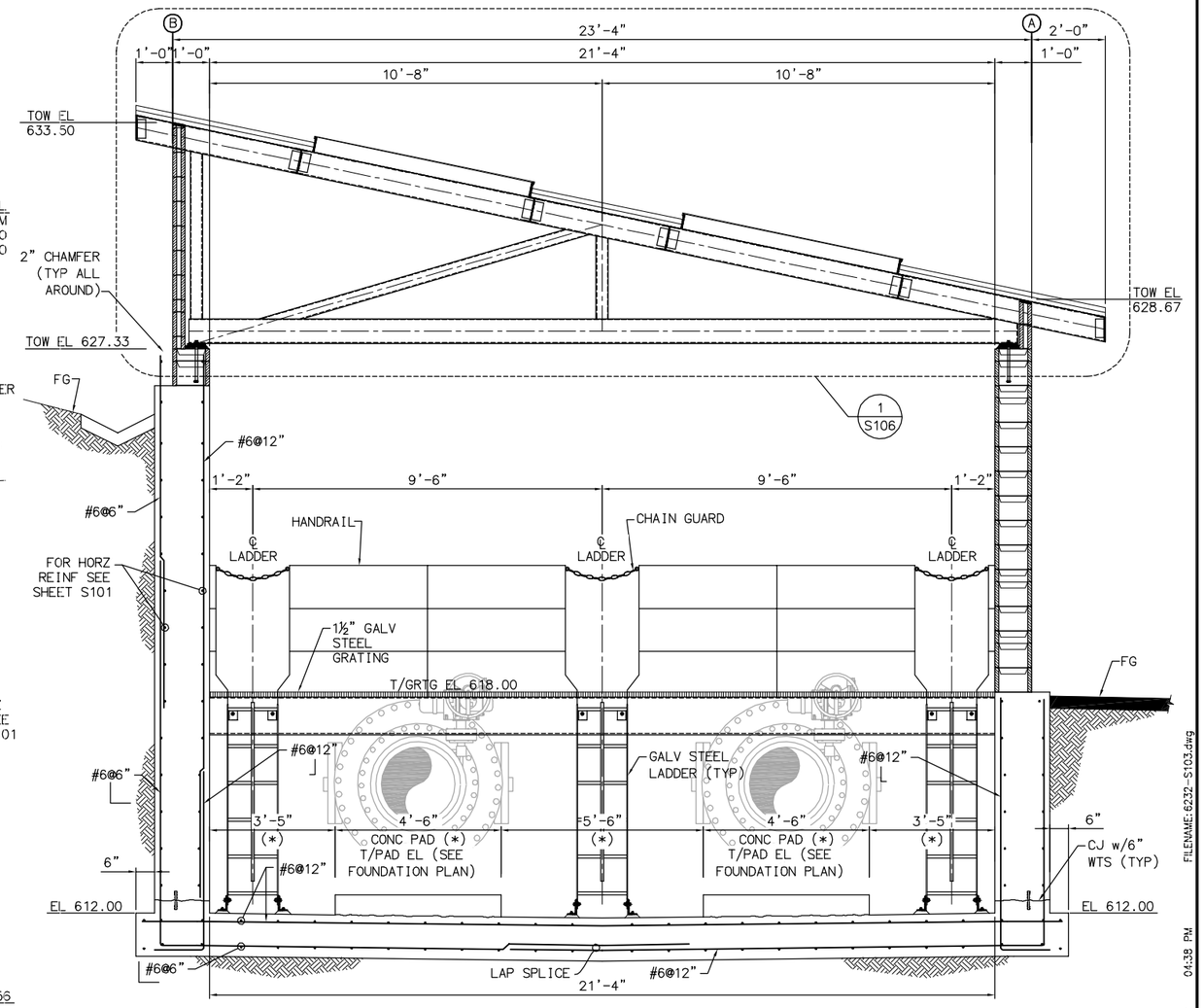

NOTE:
CONTRACTOR TO DETERMINE DIMENSIONS MARKED WITH (*)AND
T/CONC PAD ELEVATION BASED ON VALVE MANUFACTURER'S SHOP DRAWINGS.

SECTION B S101 / B S102
SCALE: 1/2" = 1'-0"

LAST SAVED BY: csteleo LAST UPDATED: 01/21/2012 04:38 PM FILENAME: 6232-S103.dwg

No.	DATE	REVISIONS	APPROVED

DESIGNED: FSD
DRAWN: CS
CHECKED: SMS

RBF CONSULTING
carollo
IRVINE RANCH WATER DISTRICT

SALAHUDDIN M. SHEIKH RCE NO. 32677 STRUCTURAL ENGINEER DATE
CINDY MILLER RCE NO. 58116 PROJECT MANAGER DATE
PATRICIA UEMATSU RCE NO. 36762 PRINCIPAL ENGINEER DATE

IRVINE RANCH WATER DISTRICT
BAKER WATER TREATMENT PLANT
PROJECT NO. 11218

FLOW CONTROL FACILITY
SECTIONS

DRAWING **S103**
SHEET **184** OF **632**

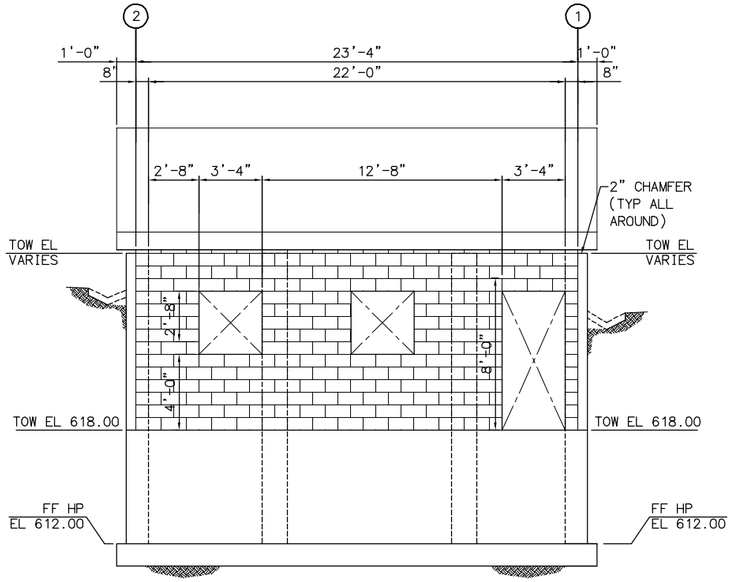

NORTH ELEVATION

(LOOKING SOUTH)
SCALE: 1/4" = 1'-0"

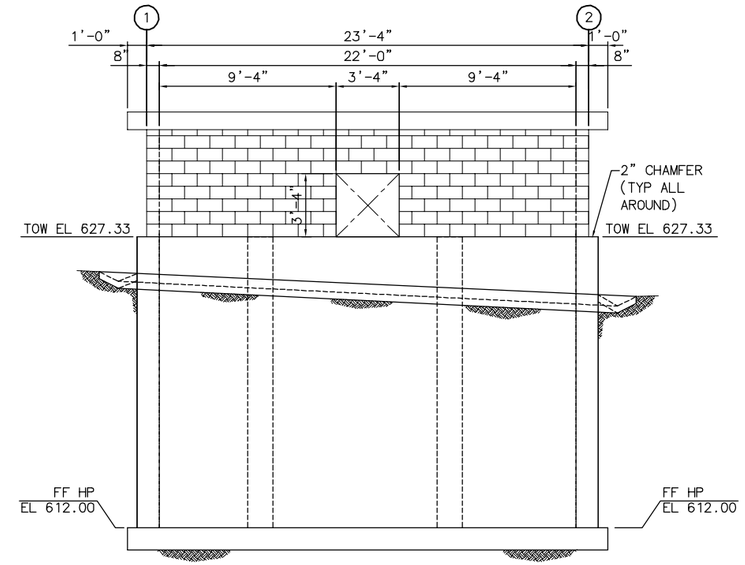

SOUTH ELEVATION

(LOOKING NORTH)
SCALE: 1/4" = 1'-0"

NOTE:
FOR CMU WALL PATTERN SEE ARCHITECTURAL DRAWINGS.

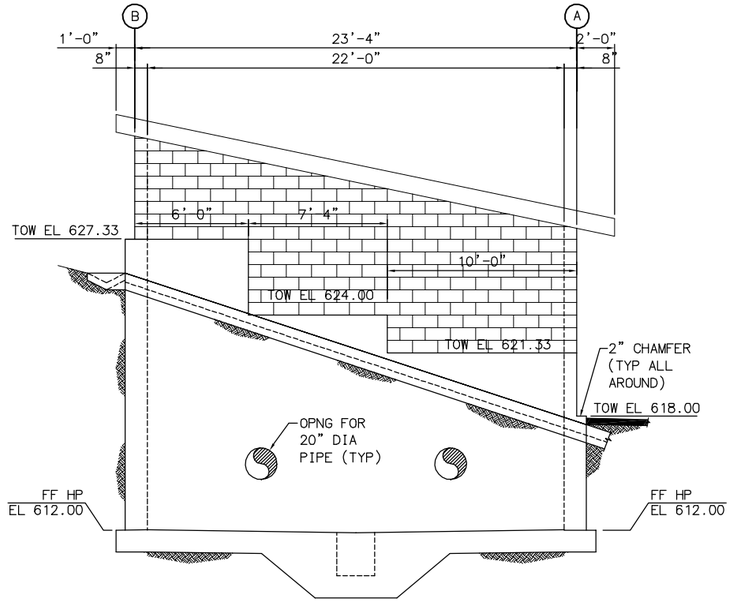

EAST ELEVATION

(LOOKING WEST)
SCALE: 1/4" = 1'-0"

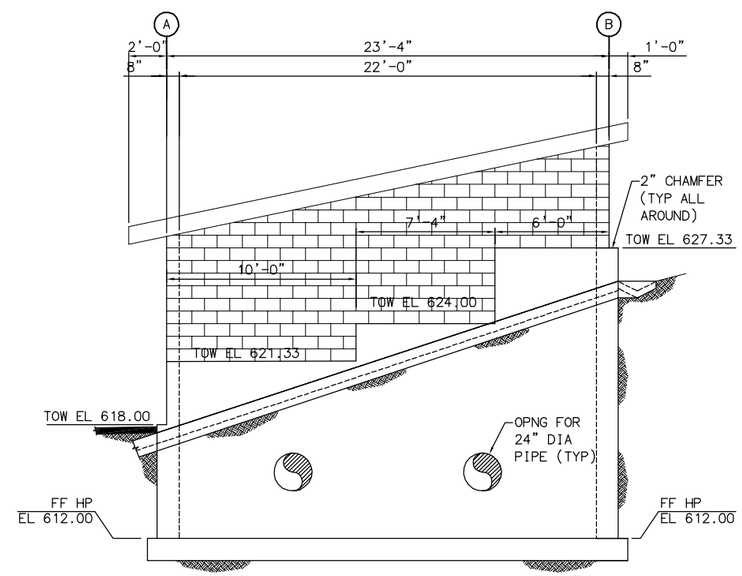

WEST ELEVATION

(LOOKING EAST)
SCALE: 1/4" = 1'-0"

FILENAME: 6232-S104.dwg
LAST UPDATED: 02/01/2012 03:31 PM
LAST SAVED BY: aretano

No.	DATE	REVISIONS	APPROVED

DESIGNED: FSD
DRAWN: CS
CHECKED: SMS

RBF CONSULTING
carollo
IRVINE RANCH WATER DISTRICT

SALAHUDDIN M. SHEIKH RCE NO. 32677 STRUCTURAL ENGINEER DATE
CINDY MILLER RCE NO. 58116 PROJECT MANAGER DATE
PATRICIA UEMATSU RCE NO. 36762 PRINCIPAL ENGINEER DATE

IRVINE RANCH WATER DISTRICT
BAKER WATER TREATMENT PLANT
PROJECT NO. 11218

FLOW CONTROL FACILITY
ELEVATIONS

DRAWING S104
SHEET 185 OF 632

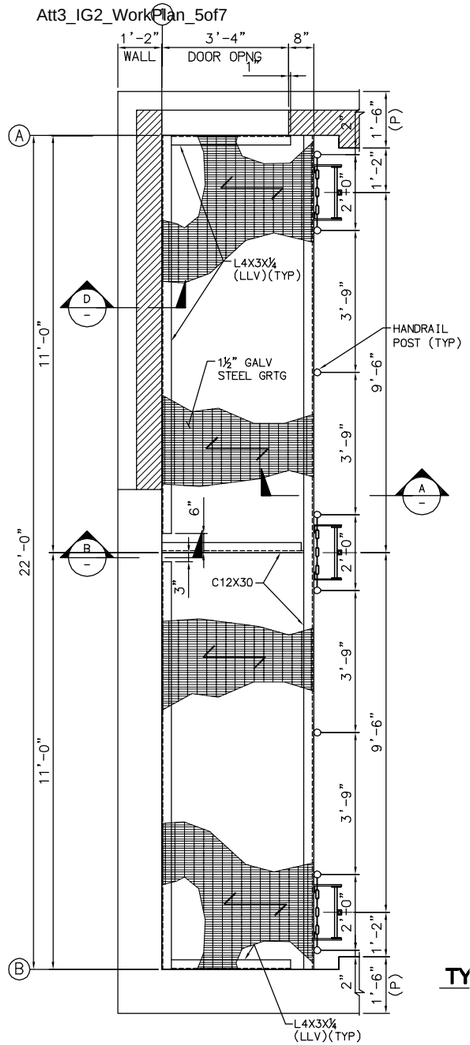

DETAIL (1 / S101)
SCALE: 1/2" = 1'-0"

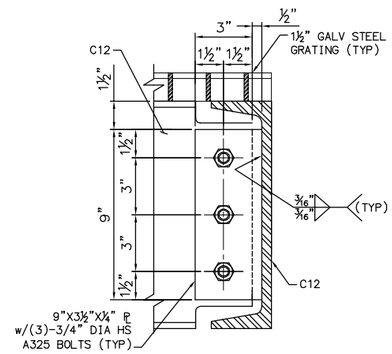

TYP C12 TO C12 CONNECTION (A / –)
SCALE: 3" = 1'-0"

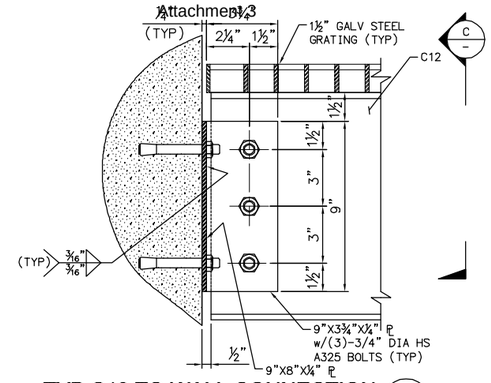

TYP C12 TO WALL CONNECTION (B / –)
SCALE: 3" = 1'-0"

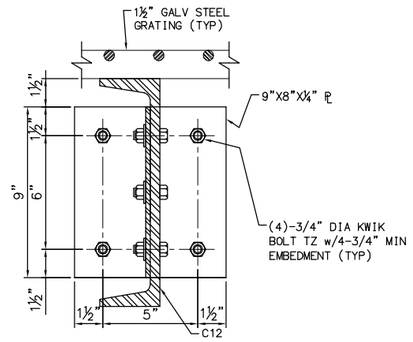

SECTION (C / –)
SCALE: 3" = 1'-0"

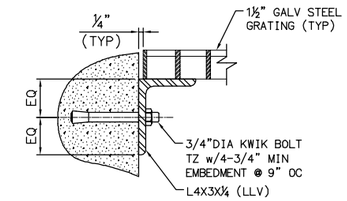

SECTION (D / –)
SCALE: 3" = 1'-0"

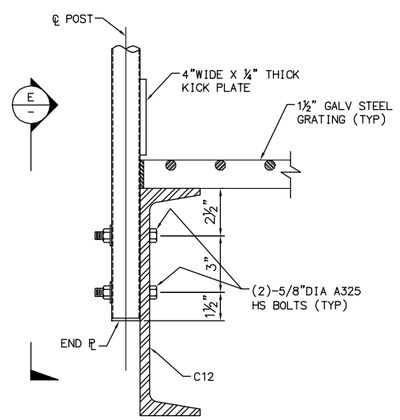

TYP HANDRAIL POST TO C12 CONNECTION (2 / –)
SCALE: 3" = 1'-0"

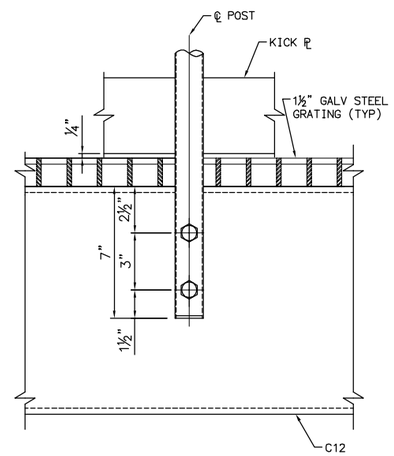

SECTION (E / –)
SCALE: 3" = 1'-0"

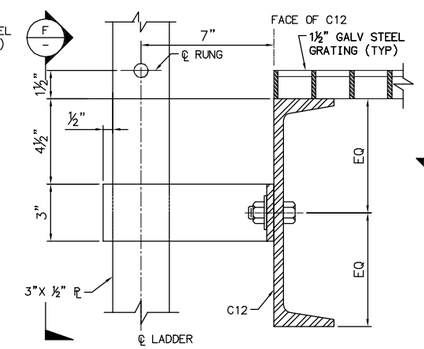

TYP LADDER TO C12 CONNECTION (3 / –)
SCALE: 3" = 1'-0"

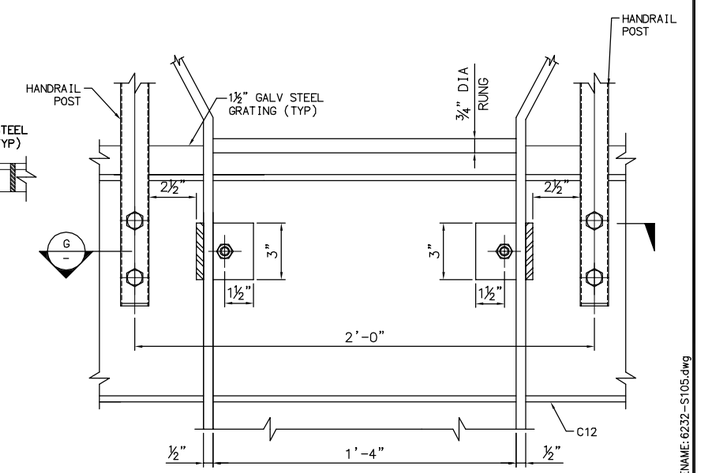

SECTION (F / –)
SCALE: 3" = 1'-0"

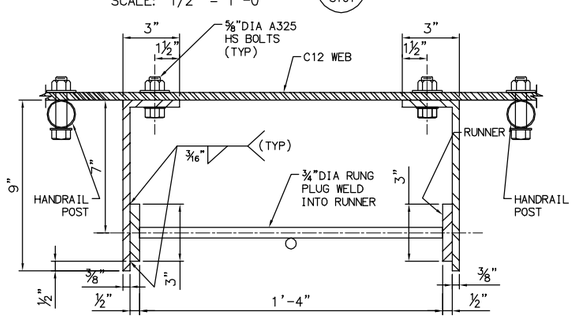

SECTION (G / –)
SCALE: 3" = 1'-0"

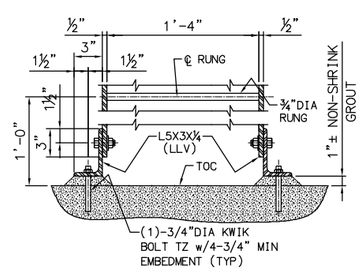

TYP LADDER TO CONC SLAB CONN. (4 / –)
SCALE: 1-1/2" = 1'-0"

FILENAME: 6232-S105.dwg
LAST UPDATED: 01/20/2012 11:29 AM
LAST SAVED BY: csteleg

No.	DATE	REVISIONS	APPROVED

DESIGNED: FSD
DRAWN: CS
CHECKED: SMS

RBF CONSULTING
carollo
IRVINE RANCH WATER DISTRICT

SALAHUDDIN M. SHEIKH RCE NO. 32677 STRUCTURAL ENGINEER DATE
CINDY MILLER RCE NO. 58116 PROJECT MANAGER DATE
PATRICIA UEMATSU RCE NO. 36762 PRINCIPAL ENGINEER DATE

IRVINE RANCH WATER DISTRICT
BAKER WATER TREATMENT PLANT
PROJECT NO. 11218

FLOW CONTROL FACILITY
SECTIONS AND DETAILS

DRAWING **S105**
SHEET **186** OF **632**

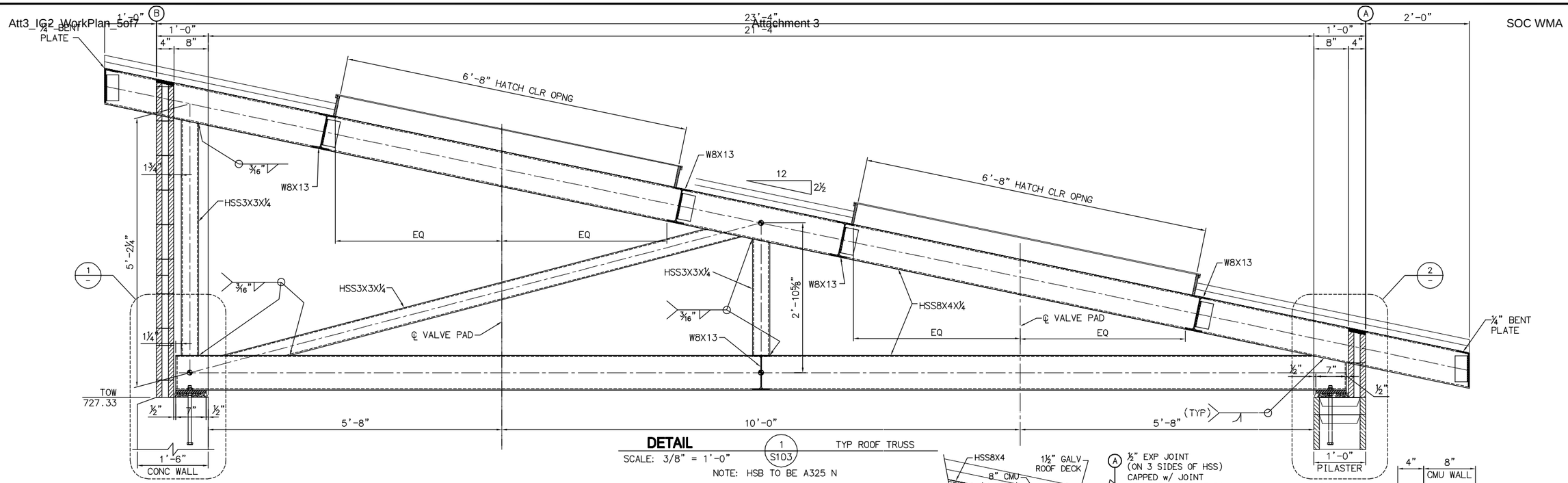

DETAIL 1/S103 TYP ROOF TRUSS
SCALE: 3/8" = 1'-0"
NOTE: HSB TO BE A325 N

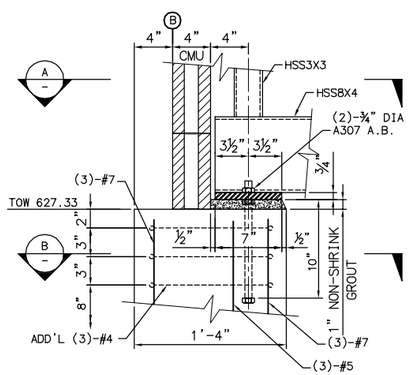

DETAIL 1/– N.T.S

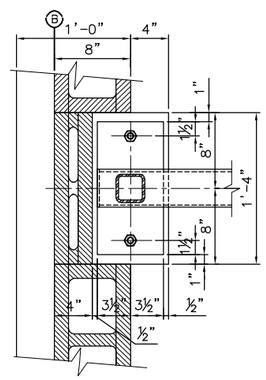

SECTION A/– N.T.S

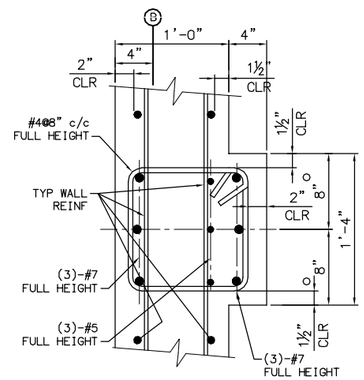

SECTION B/– N.T.S

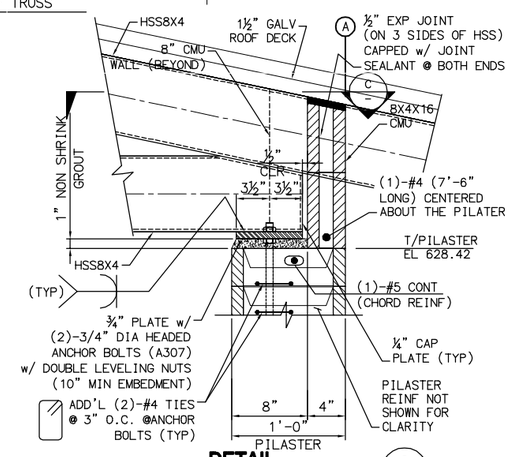

DETAIL 2/– SCALE: 1-1/2" = 1'-0"

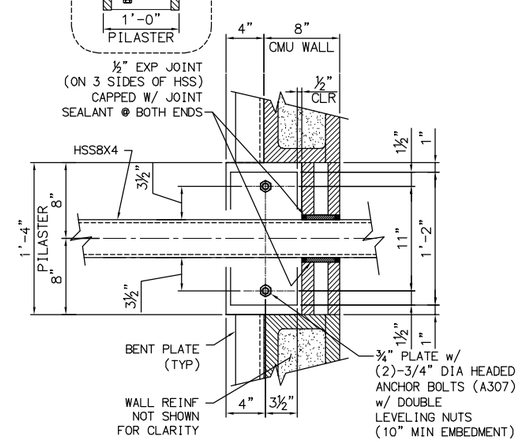

SECTION C/– SCALE: 1-1/2" = 1'-0"

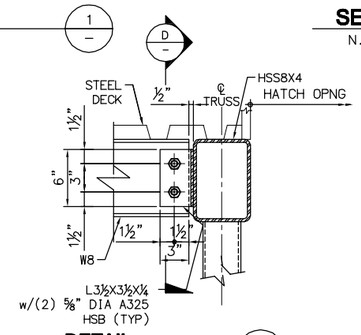

DETAIL 3/S103 SCALE: 1-1/2" = 1'-0"

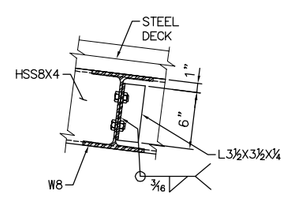

SECTION D/– SCALE: 1-1/2" = 1'-0"

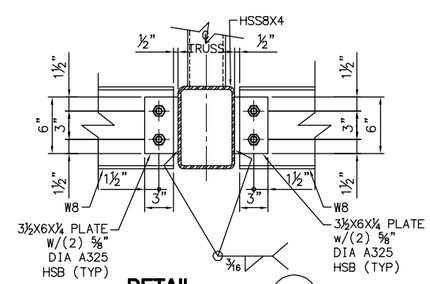

DETAIL 4/S103 SCALE: 1-1/2" = 1'-0"

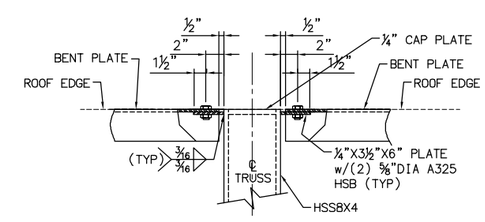

DETAIL 5/S102 SCALE: 1-1/2" = 1'-0"

No.	DATE	REVISIONS	APPROVED

DESIGNED: FSD
DRAWN: CS
CHECKED: SMS

RBF CONSULTING

carollo

IRVINE RANCH WATER DISTRICT

SALAHUDDIN M. SHEIKH	RCE NO. 32677	STRUCTURAL ENGINEER	DATE
CINDY MILLER	RCE NO. 58116	PROJECT MANAGER	DATE
PATRICIA UEMATSU	RCE NO. 36762	PRINCIPAL ENGINEER	DATE

IRVINE RANCH WATER DISTRICT
BAKER WATER TREATMENT PLANT
PROJECT NO. 11218

FLOW CONTROL FACILITY
TRUSS DETAILS - SHEET 1

DRAWING **S106**
SHEET **187** OF **632**

FILENAME: 6232-S106.dwg
LAST UPDATED: 01/21/2012 05:42 PM
LAST SAVED BY: csteleg

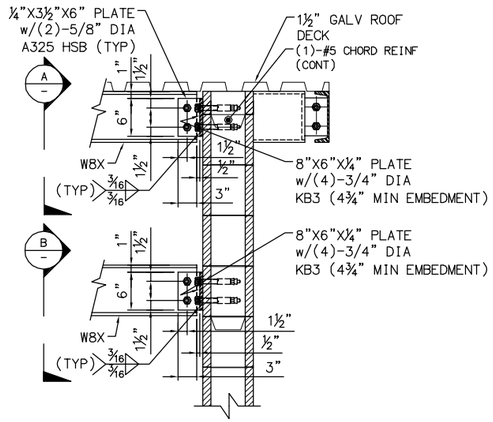

DETAIL 5/S103
SCALE: 1" = 1'-0"

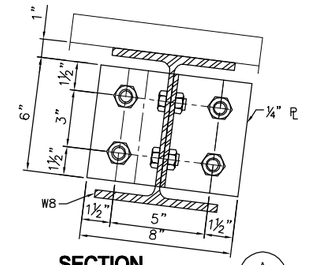

SECTION A
SCALE: 3" = 1'-0"

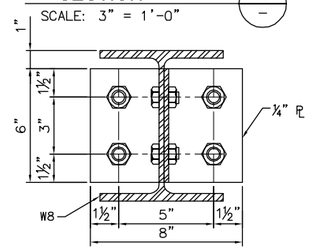

SECTION B
SCALE: 3" = 1'-0"

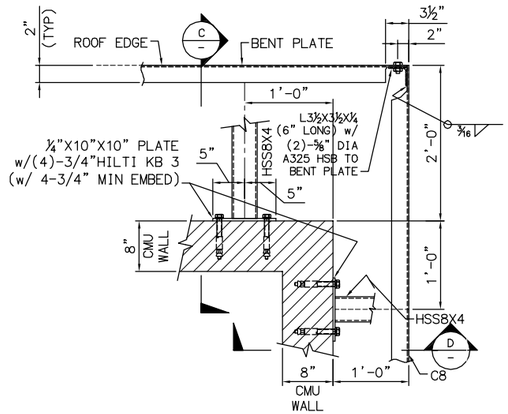

DETAIL 6/S102
SCALE: 1" = 1'-0"

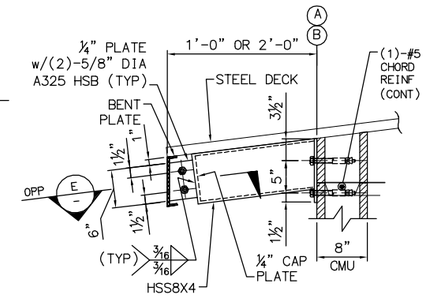

SECTION C
SCALE: 1" = 1'-0"

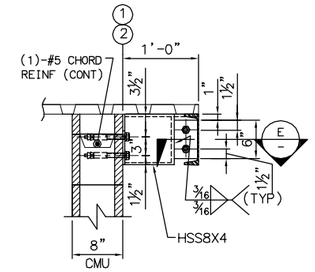

SECTION D
SCALE: 1" = 1'-0"

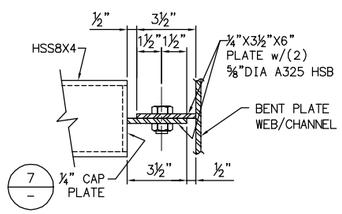

SECTION E
SCALE: 3" = 1'-0"

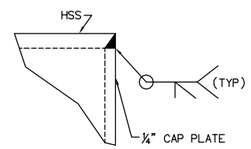

NOTE:
ALL OPEN ENDED HSS MEMBERS SHALL BE CAPPED w/ ¼" CAP PLATE.

DETAIL 7
NTS

LAST SAVED BY: csteleo LAST UPDATED: 01/21/2012 04:59 PM FILENAME: 6232-S107.dwg

No.	DATE	REVISIONS	APPROVED

DESIGNED: FSD
DRAWN: CS
CHECKED: SMS

RBF CONSULTING

carollo

IRVINE RANCH WATER DISTRICT

SALAHUDDIN M. SHEIKH RCE NO. 32677 STRUCTURAL ENGINEER DATE
CINDY MILLER RCE NO. 58116 PROJECT MANAGER DATE
PATRICIA UEMATSU RCE NO. 36762 PRINCIPAL ENGINEER DATE

IRVINE RANCH WATER DISTRICT
BAKER WATER TREATMENT PLANT
PROJECT NO. 11218

FLOW CONTROL FACILITY
TRUSS DETAILS - SHEET 2

DRAWING **S107**
SHEET 188 OF 632

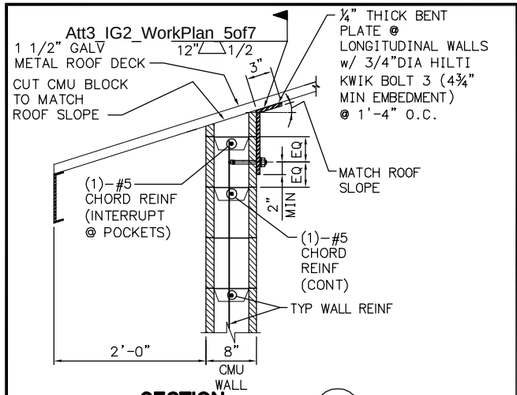

SECTION G S102
N.T.S

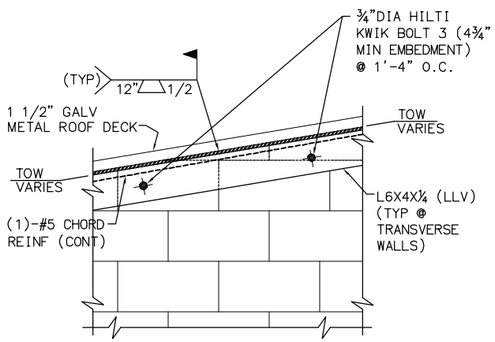

SECTION H S102
N.T.S

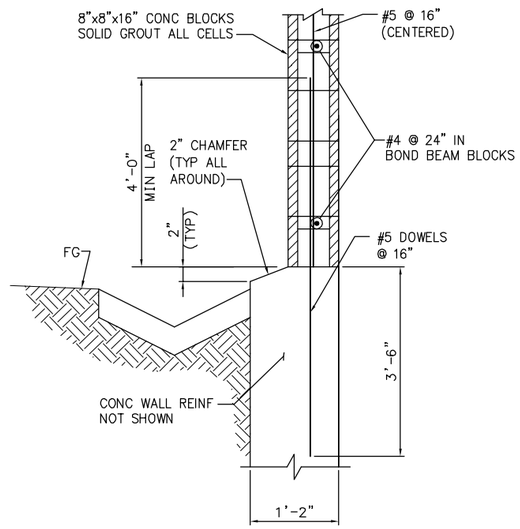

DETAIL 1 – TYP 8" CMU EXTERIOR
N.T.S

Attachment 3

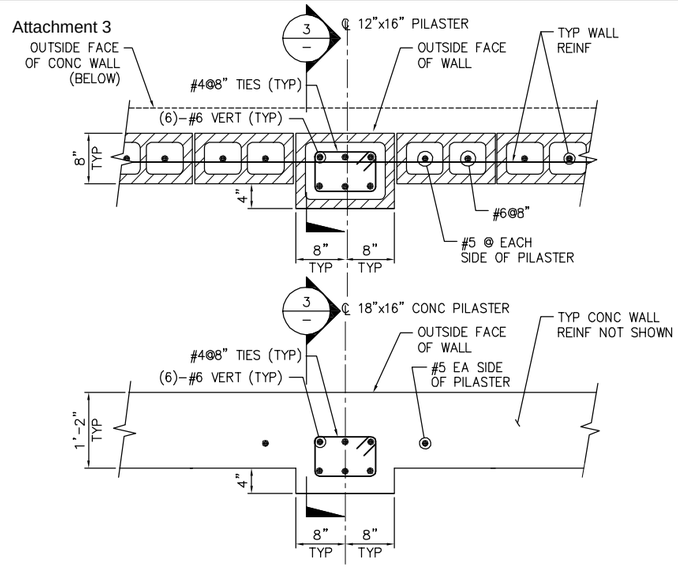

DETAIL 2 – TYP PILASTER DETAILS
N.T.S

SOC WMA

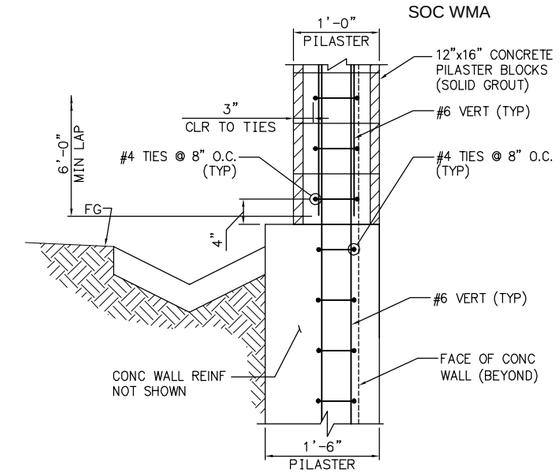

DETAIL 3 – PILASTER SECTION
N.T.S

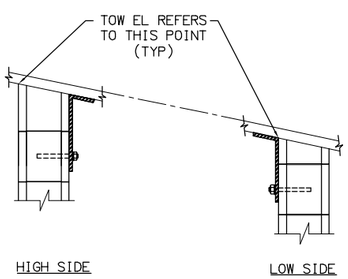

DETAIL 4 – T/CMU WALL ELEVATION DETAIL
N.T.S

LAST SAVED BY: csteleo LAST UPDATED: 01/21/2012 05:03 PM FILENAME: 6232-S108.dwg

No.	DATE	REVISIONS	APPROVED

DESIGNED: FSD
DRAWN: CS
CHECKED: SMS

RBF CONSULTING

carollo

IRVINE RANCH WATER DISTRICT

SALAHUDDIN M. SHEIKH RCE NO. 32677 STRUCTURAL ENGINEER DATE
CINDY MILLER RCE NO. 58116 PROJECT MANAGER DATE
PATRICIA UEMATSU RCE NO. 36762 PRINCIPAL ENGINEER DATE

IRVINE RANCH WATER DISTRICT
BAKER WATER TREATMENT PLANT
PROJECT NO. 11218

FLOW CONTROL FACILITY
MISC. SECTIONS AND DETAILS

DRAWING **S108**
SHEET 189 OF 632

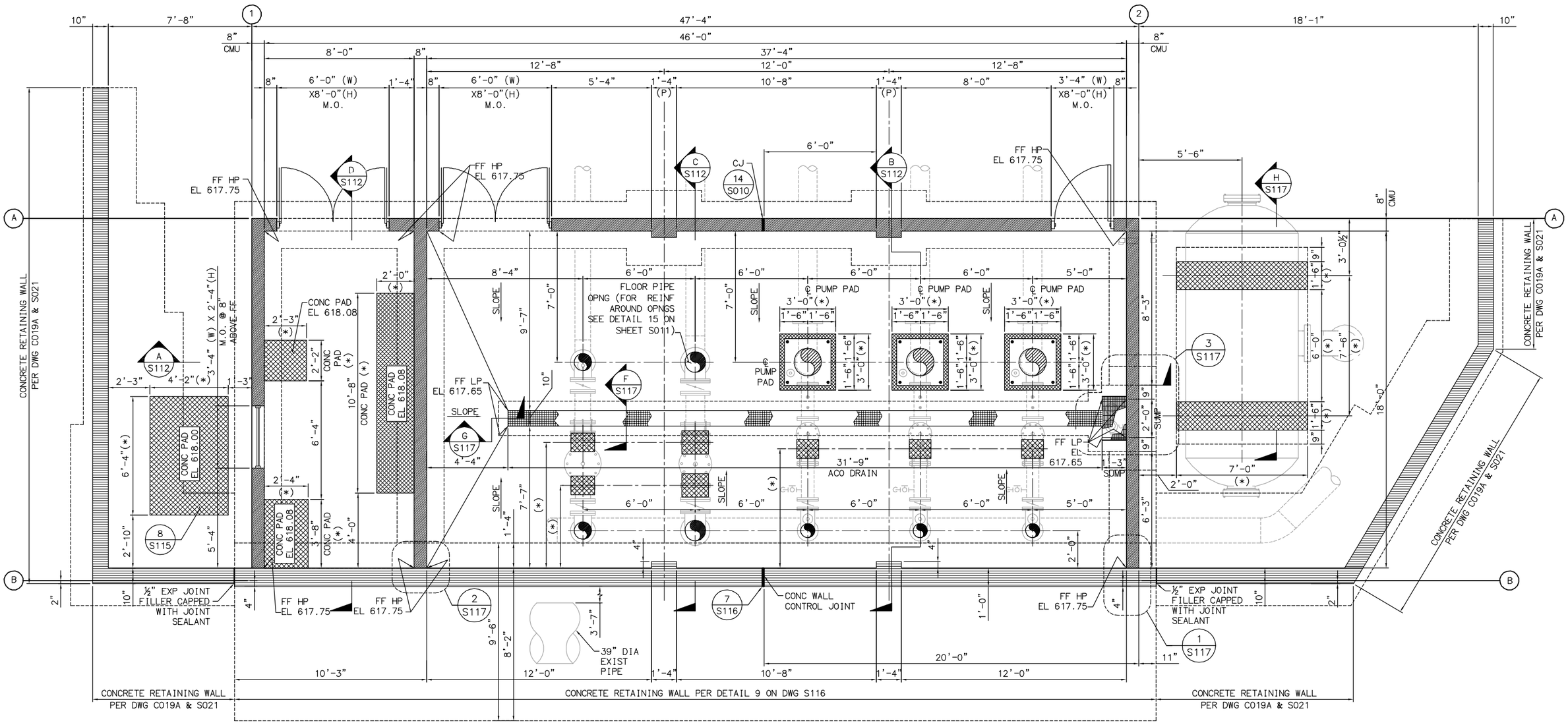

LEGEND:

- MASONRY WALL
- CONCRETE PAD/SUPPORTS
- CONCRETE RETAINING WALL
- (P) 12"X16" CMU PILASTER

NOTES:

1. CONTRACTOR SHALL COORDINATE OPENINGS SIZE AND ELEVATION WITH ARCHITECTURAL SHEETS.
2. CONTRACTOR SHALL VERIFY/COORDINATE DIMENSIONS MARKED WITH (*) WITH PIPING OR MANUFACTURER'S EQUIPMENT SHOP DRAWINGS.

FOUNDATION/FLOOR PLAN

SCALE: 3/8"=1'-0"

LAST SAVED BY: csteleo LAST UPDATED: 01/25/2012 09:13 AM FILENAME: 6232-S109.dwg

No.	DATE	REVISIONS	APPROVED

DESIGNED: FSD
DRAWN: CS
CHECKED: SMS

RBF CONSULTING | carollo | IRVINE RANCH WATER DISTRICT

SALAHUDDIN M. SHEIKH	RCE NO. 32677	STRUCTURAL ENGINEER	DATE
CINDY MILLER	RCE NO. 58116	PROJECT MANAGER	DATE
PATRICIA UEMATSU	RCE NO. 36762	PRINCIPAL ENGINEER	DATE

IRVINE RANCH WATER DISTRICT
BAKER WATER TREATMENT PLANT
PROJECT NO. 11218

TCWD PUMP STATION
FOUNDATION/FLOOR PLAN

DRAWING S109
SHEET 190 OF 632

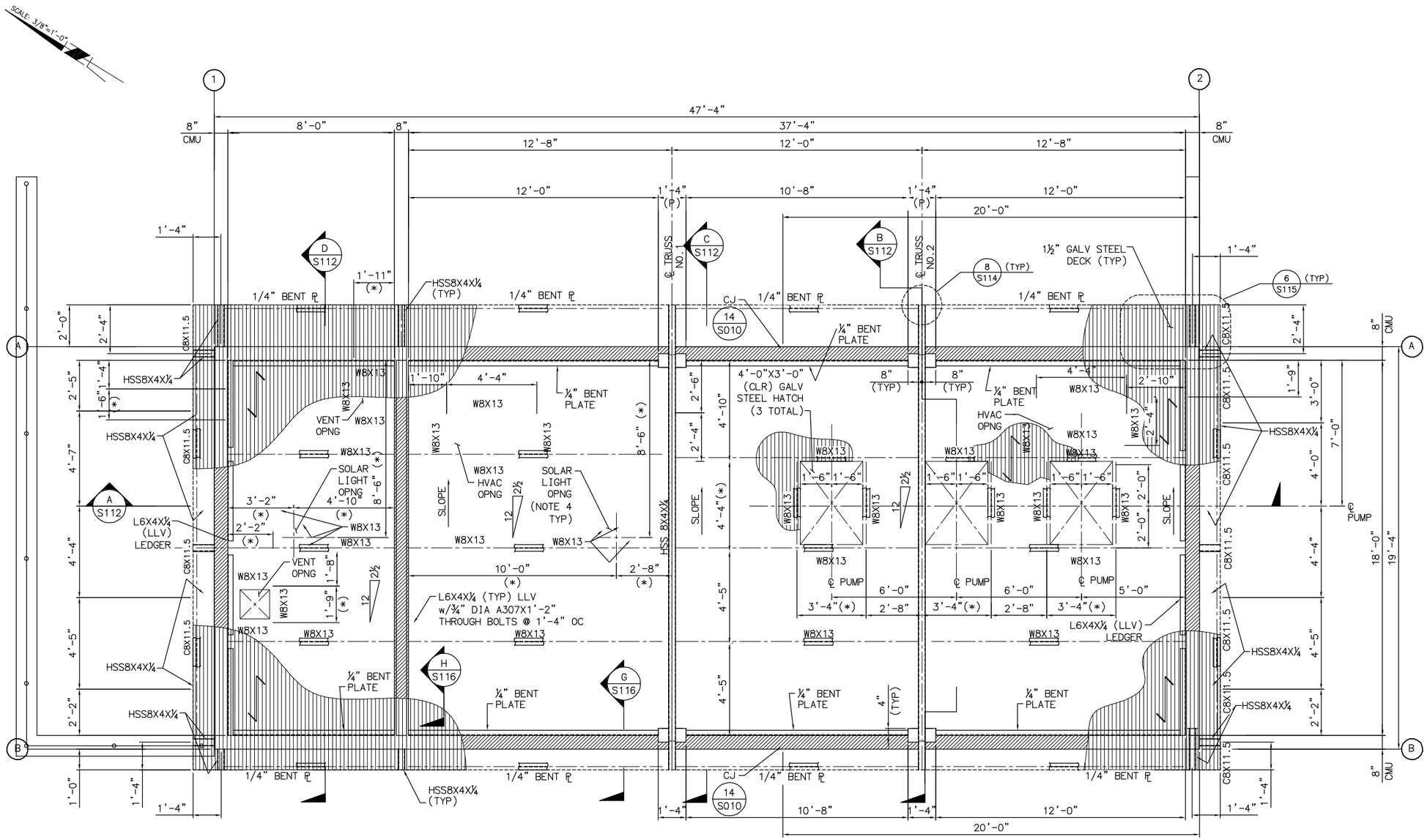

NOTES:

1. STEEL DECK: 1½" HSB-36 20 GA-GALVANIZED
   I = 0.216IN^4 (+)S = 0.235IN^3, (−)S = 0.248IN^3
2. ROOF DECK ATTACHMENTS:
   7 WELDS PER SHEET @ SUPPORTS
   ½" PUDDLE WELDS AT 12" c/c AT EDGES PARALLEL TO SPAN.
   1½" TOP SEAM WELD AT 12" c/c.
3. ⟶ DENOTES DECK ORIENTATION.
4. CONTRACTOR SHALL VERIFY/COORDINATE DIMENSIONS MARKED WITH (*) PER MANUFACTURER'S EQUIPMENT SHOP DRAWINGS.
   CONTRACTOR SHALL DETERMINE SOLAR LIGHT OPNG DIMENSIONS BASED ON ARCHITECTURAL/MANUFACTURER'S DRAWINGS.

LEGEND:

MASONRY WALL

STEEL DECK

(P) 12"X16" CMU PILASTER

ROOF PLAN - TOP CHORD

SCALE: 3/8"=1'-0"

No.	DATE	REVISIONS	APPROVED

DESIGNED: FSD
DRAWN: CS
CHECKED: SMS

RBF CONSULTING

carollo

IRVINE RANCH WATER DISTRICT

SALAHUDDIN M. SHEIKH	RCE NO. 32677	STRUCTURAL ENGINEER	DATE
CINDY MILLER	RCE NO. 58116	PROJECT MANAGER	DATE
PATRICIA UEMATSU	RCE NO. 36762	PRINCIPAL ENGINEER	DATE

IRVINE RANCH WATER DISTRICT
BAKER WATER TREATMENT PLANT
PROJECT NO. 11218

TCWD PUMP STATION
ROOF PLAN

DRAWING S110
SHEET 191 OF 632

FILENAME: 6232-S110.dwg
LAST UPDATED: 01/25/2012 09:14 AM
LAST SAVED BY: csteleo

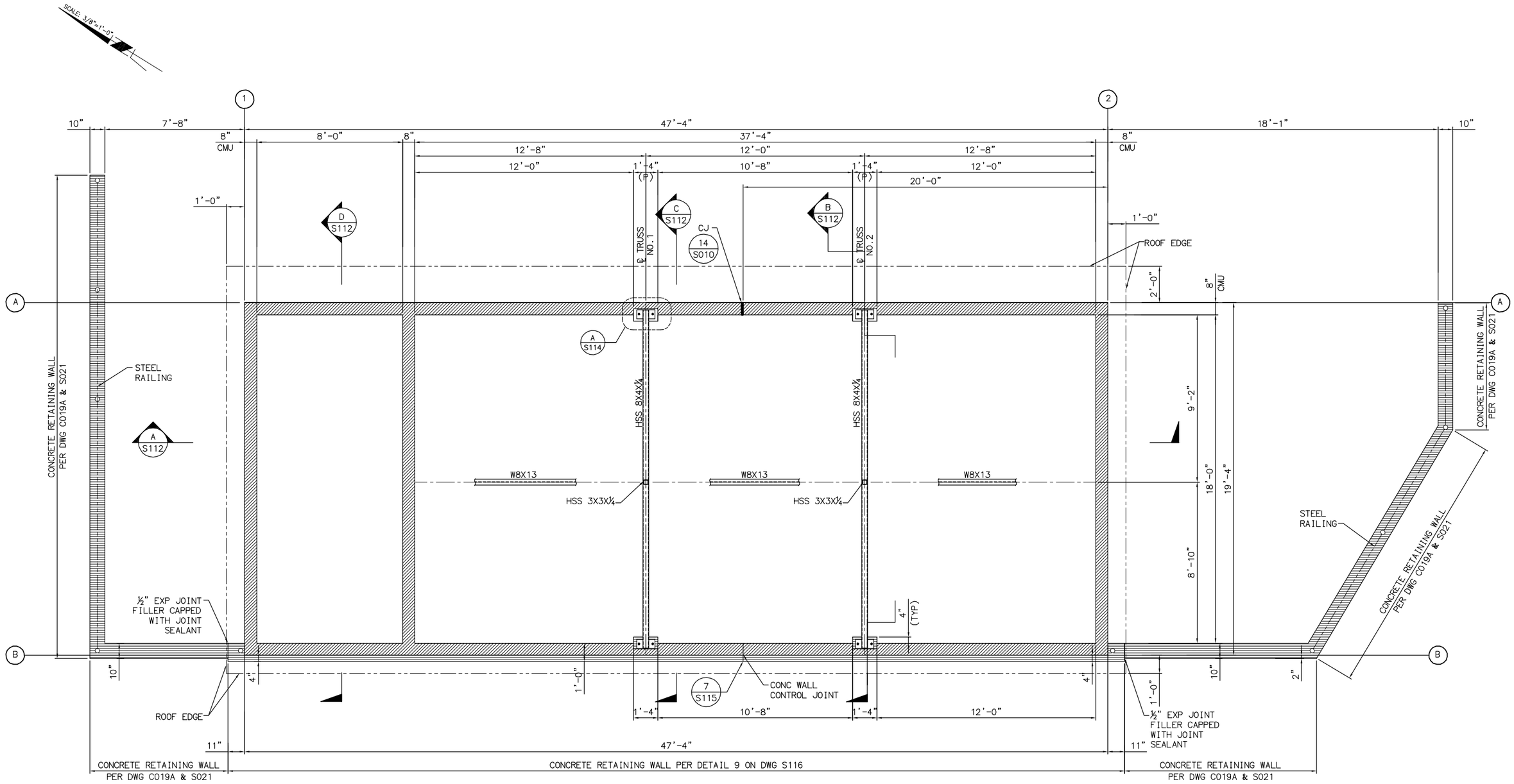

ROOF PLAN - BOTTOM CHORD

SCALE: 3/8"=1'-0"

LEGEND:

- MASONRY WALL
- CONCRETE RETAINING WALL
- (P) 12"X16" CMU PILASTER

FILENAME: 6232-S111.dwg
LAST UPDATED: 01/25/2012 09:14 AM
LAST SAVED BY: csteleo

No.	DATE	REVISIONS	APPROVED

DESIGNED: FSD
DRAWN: CS
CHECKED: SMS

RBF CONSULTING

carollo

IRVINE RANCH WATER DISTRICT

SALAHUDDIN M. SHEIKH RCE NO. 32677 STRUCTURAL ENGINEER DATE
CINDY MILLER RCE NO. 58116 PROJECT MANAGER DATE
PATRICIA UEMATSU RCE NO. 36762 PRINCIPAL ENGINEER DATE

IRVINE RANCH WATER DISTRICT
BAKER WATER TREATMENT PLANT
PROJECT NO. 11218

TCWD PUMP STATION
ROOF PLAN - BOTTOM CHORD

DRAWING **S111**

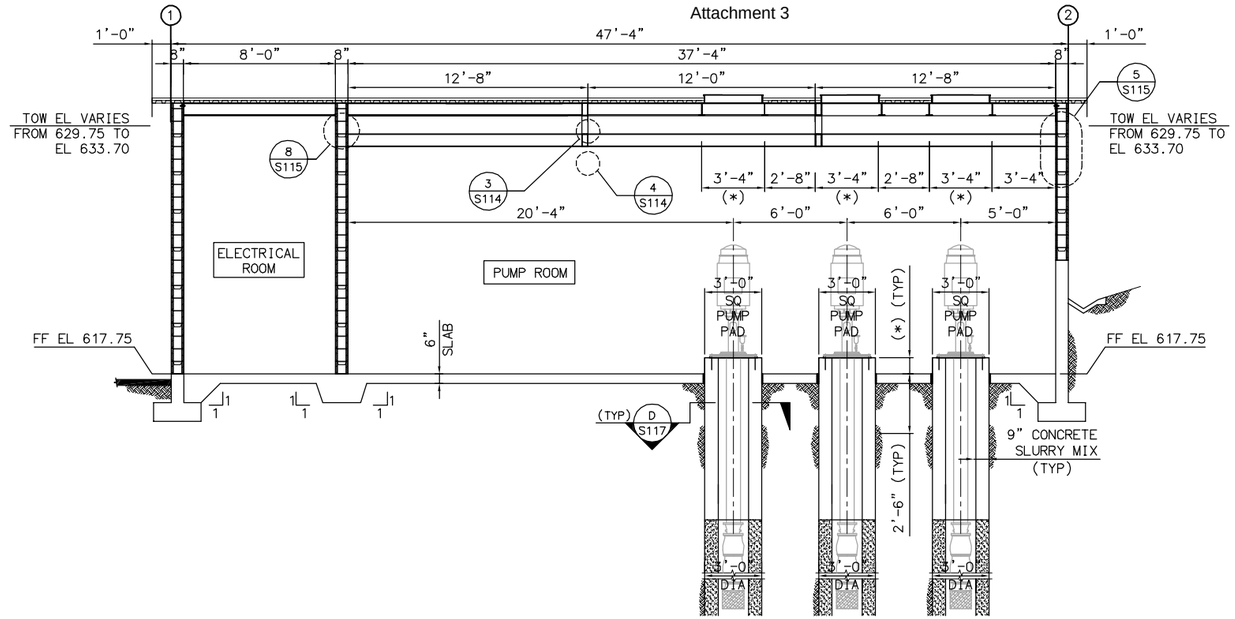

SECTION
SCALE: 1/4" = 1'-0"
A S109 A S110 A S111

NOTES:
1. CONTRACTOR SHALL VERIFY/COORDINATE DIMENSIONS MARKED WITH (*) PER MANUFACTURER'S EQUIPMENT SHOP DRAWINGS.
2. MASONRY WALLS SHALL BE CONSTRUCTED AFTER CONCRETE RETAINING WALL HAS BEEN BUILT AND FULL HEIGHT BACKFILL IS IN PLACE.

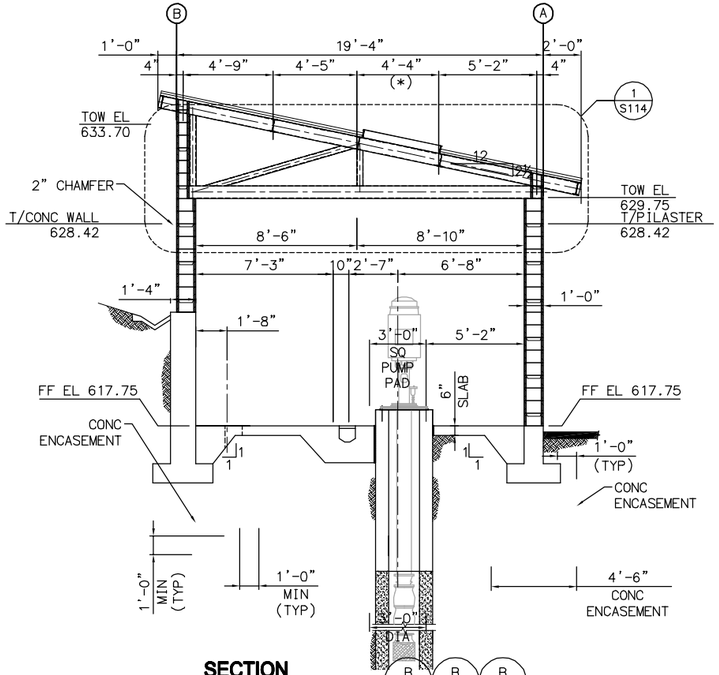

SECTION
SCALE: 1/4" = 1'-0"
B S109 B S110 B S111

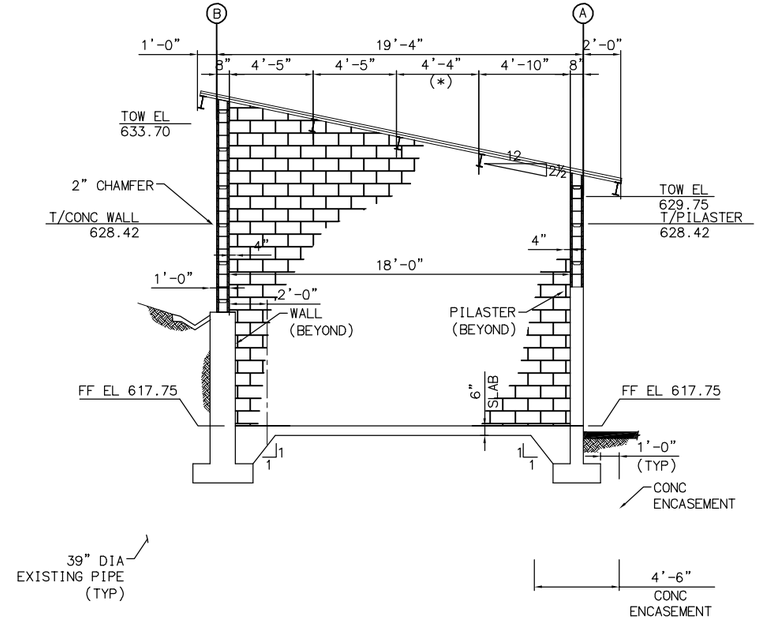

SECTION
SCALE: 1/4" = 1'-0"
C S109 C S110 C S111

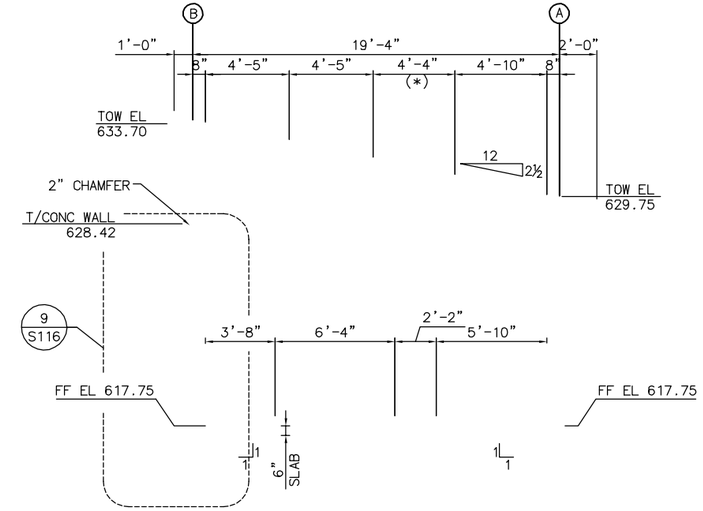

SECTION
SCALE: 1/4" = 1'-0"
D S109 D S110 D S111

No.	DATE	REVISIONS	APPROVED

DESIGNED: FSD
DRAWN: CS
CHECKED: SMS

RBF CONSULTING

carollo

IRVINE RANCH WATER DISTRICT

SALAHUDDIN M. SHEIKH RCE NO. 32677 STRUCTURAL ENGINEER DATE
CINDY MILLER RCE NO. 58116 PROJECT MANAGER DATE
PATRICIA UEMATSU RCE NO. 36762 PRINCIPAL ENGINEER DATE

IRVINE RANCH WATER DISTRICT
BAKER WATER TREATMENT PLANT
PROJECT NO. 11218

TCWD PUMP STATION-SECTIONS

DRAWING
S112
SHEET
193 OF 632

FILENAME: 6232-S112.dwg
LAST UPDATED: 01/25/2012 09:16 AM
LAST SAVED BY: csteleo

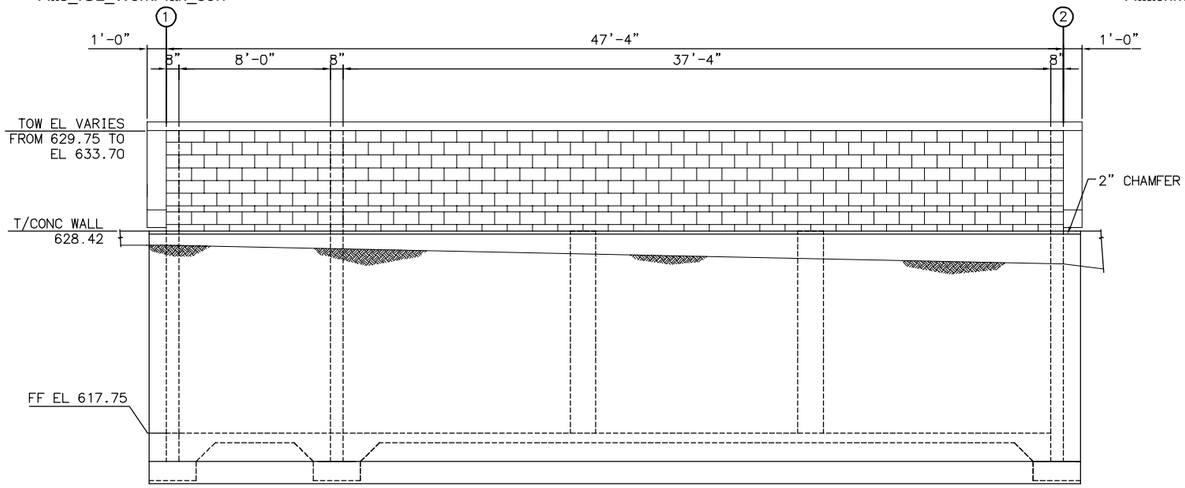

SOUTH ELEVATION
(LOOKING NORTH)
SCALE: 3/16" = 1'-0"

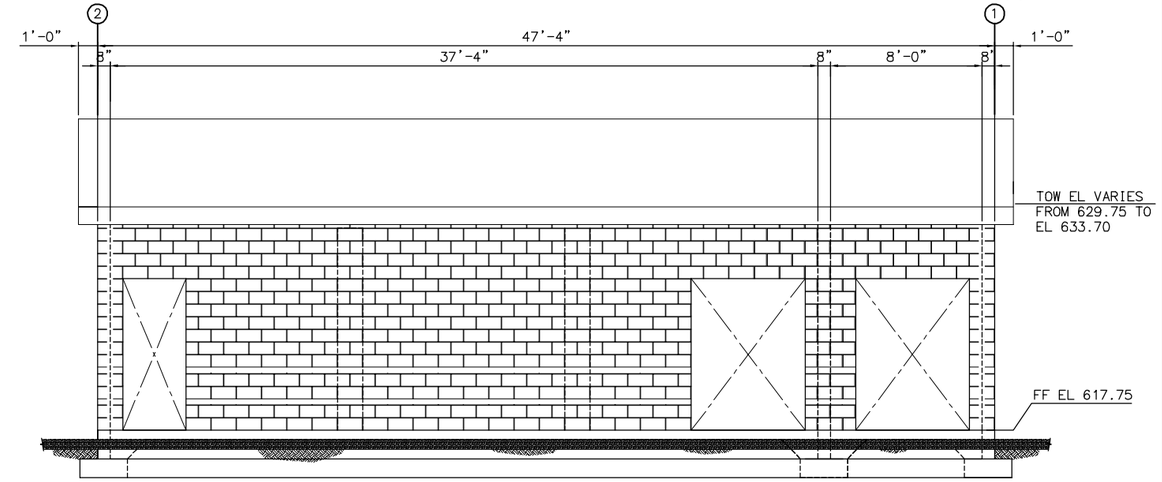

NORTH ELEVATION
(LOOKING SOUTH)
SCALE: 3/16" = 1'-0"

NOTE:
FOR CMU WALL PATTERN SEE ARCHITECTURAL DRAWINGS.

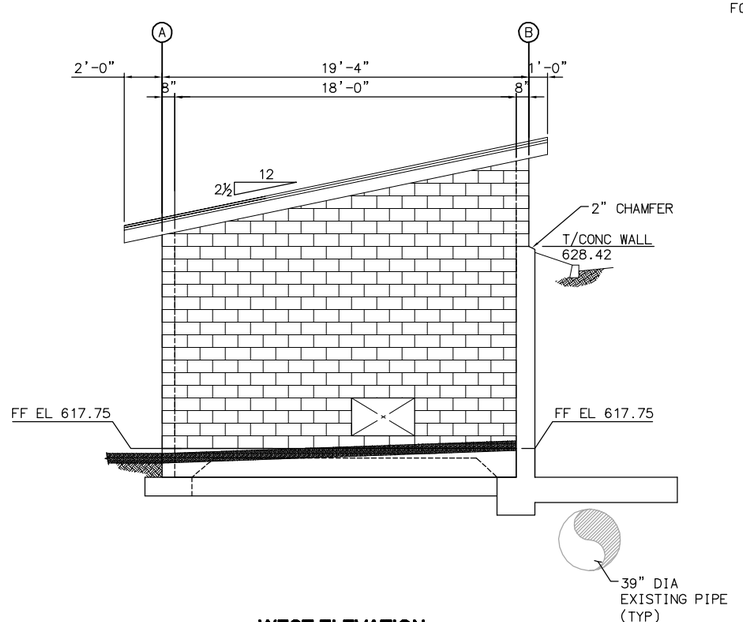

WEST ELEVATION
(LOOKING EAST)
SCALE: 3/16" = 1'-0"

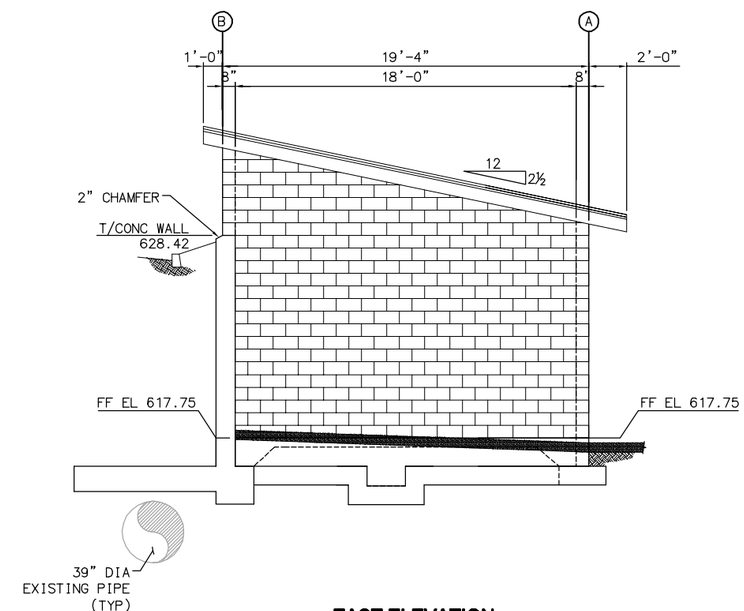

EAST ELEVATION
(LOOKING WEST)
SCALE: 3/16" = 1'-0"

LAST SAVED BY: dtrujillo LAST UPDATED: 01/24/2012 02:34 PM FILENAME: 6232-S113.dwg

No.	DATE	REVISIONS	APPROVED

DESIGNED: FSD
DRAWN: CS
CHECKED: SMS

RBF CONSULTING

carollo

IRVINE RANCH WATER DISTRICT

SALAHUDDIN M. SHEIKH	RCE NO. 32677	STRUCTURAL ENGINEER	DATE
CINDY MILLER	RCE NO. 58116	PROJECT MANAGER	DATE
PATRICIA UEMATSU	RCE NO. 36762	PRINCIPAL ENGINEER	DATE

IRVINE RANCH WATER DISTRICT
BAKER WATER TREATMENT PLANT
PROJECT NO. 11218

TCWD PUMP STATION
ELEVATIONS

DRAWING
S113

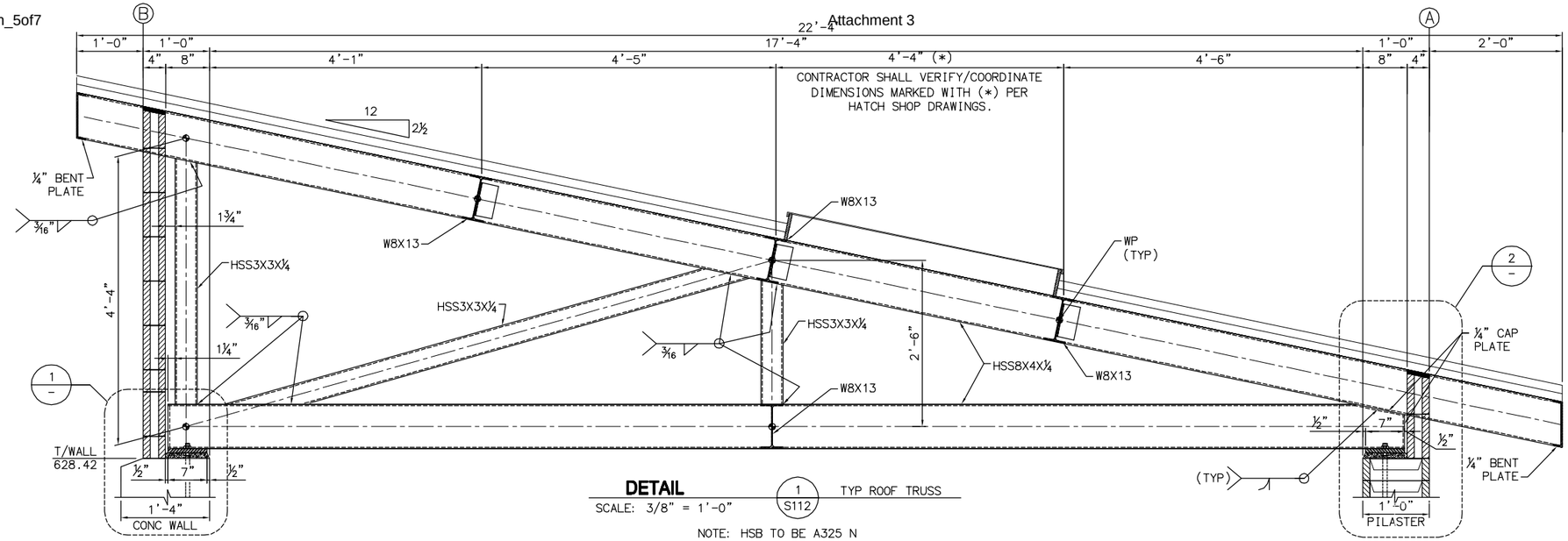

DETAIL 1/S112 TYP ROOF TRUSS
SCALE: 3/8" = 1'-0"

NOTE: HSB TO BE A325 N

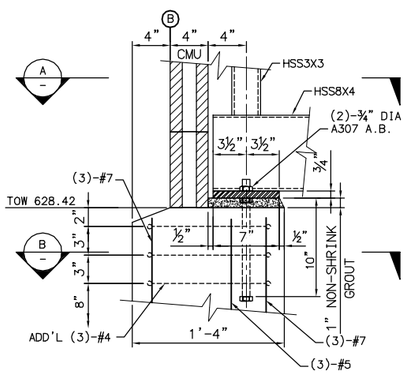

DETAIL 1/– N.T.S

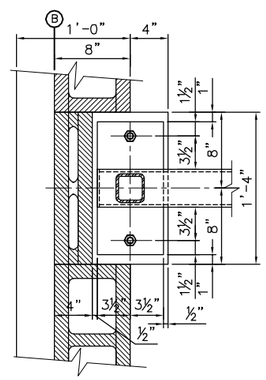

SECTION A/– N.T.S

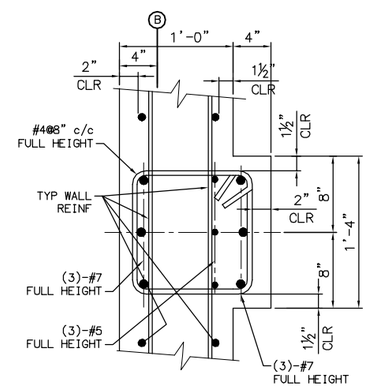

SECTION B/– N.T.S

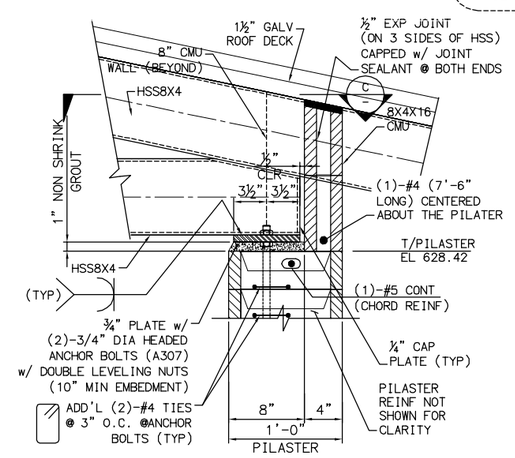

DETAIL 2/– SCALE: 1-1/2" = 1'-0"

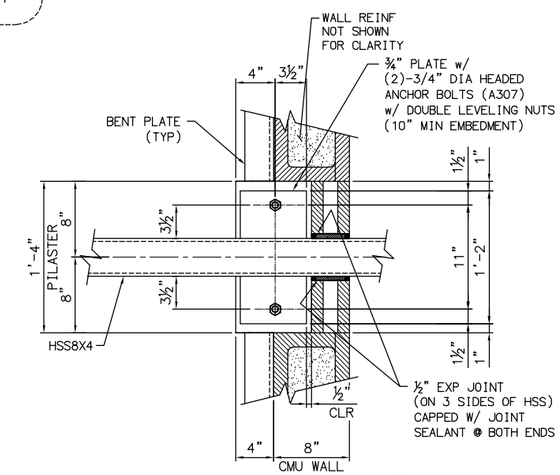

SECTION C/– SCALE: 1-1/2" = 1'-0"

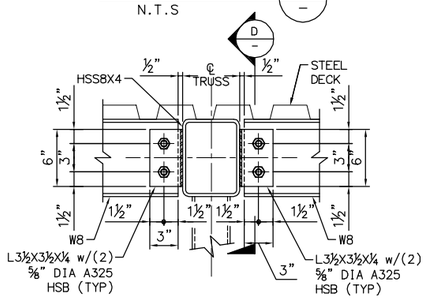

DETAIL 3/S112 SCALE: 1-1/2" = 1'-0"

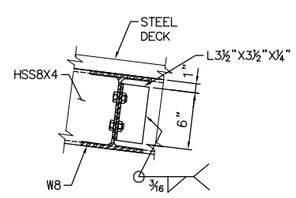

SECTION D/– SCALE: 1-1/2" = 1'-0"

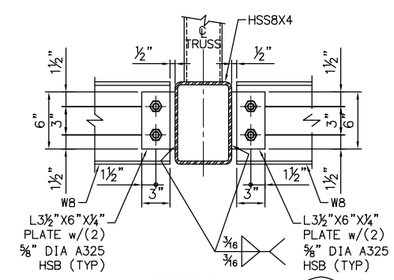

DETAIL 4/S112 SCALE: 1-1/2" = 1'-0"

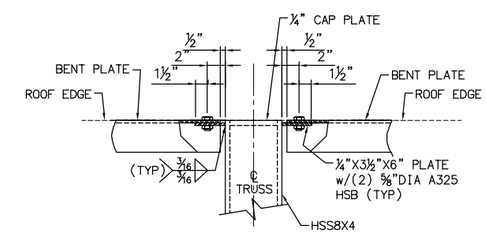

DETAIL 8/S110 SCALE: 1-1/2" = 1'-0"

No.	DATE	REVISIONS	APPROVED

DESIGNED: FSD
DRAWN: CS
CHECKED: SMS

RBF CONSULTING

carollo

IRVINE RANCH WATER DISTRICT

SALAHUDDIN M. SHEIKH	RCE NO. 32677	STRUCTURAL ENGINEER	DATE
CINDY MILLER	RCE NO. 58116	PROJECT MANAGER	DATE
PATRICIA UEMATSU	RCE NO. 36762	PRINCIPAL ENGINEER	DATE

IRVINE RANCH WATER DISTRICT
BAKER WATER TREATMENT PLANT
PROJECT NO. 11218

TCWD PUMP STATION
TRUSS DETAILS - SHEET 1

DRAWING **S114**
SHEET **195** OF **632**

FILENAME: 6232-S114.dwg
LAST UPDATED: 01/21/2012 05:34 PM
LAST SAVED BY: csteleg

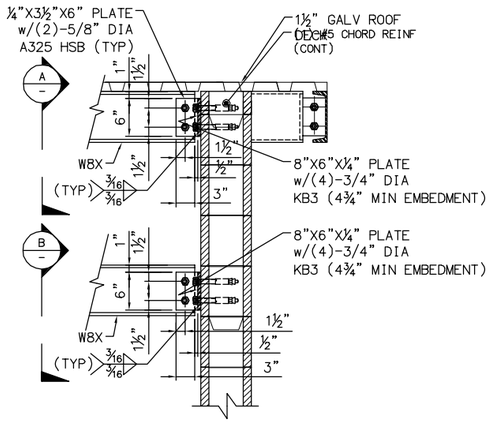

DETAIL 5/S112
SCALE: 1" = 1'-0"

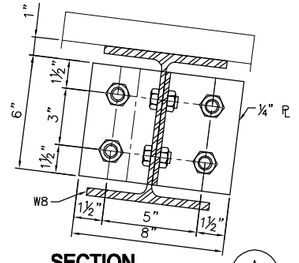

SECTION A
SCALE: 3" = 1'-0"

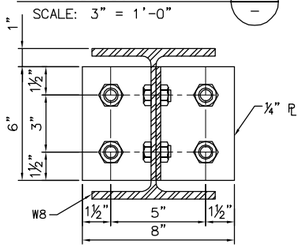

SECTION B
SCALE: 3" = 1'-0"

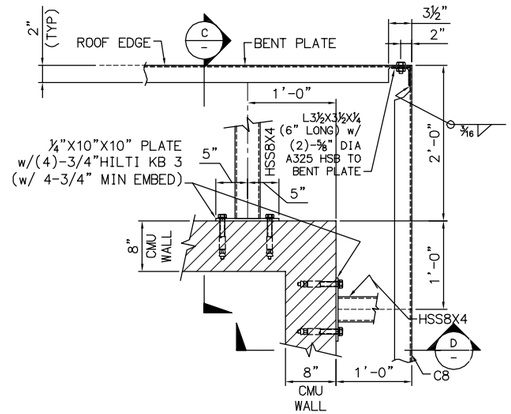

DETAIL 6/S110
SCALE: 1" = 1'-0"

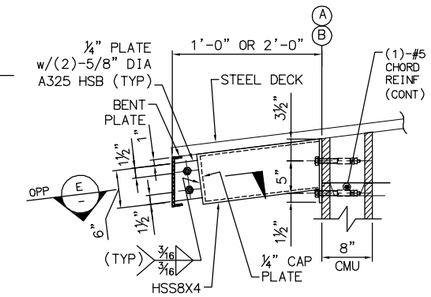

SECTION C
SCALE: 1" = 1'-0"

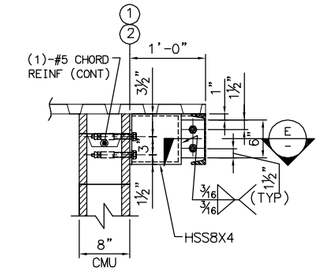

SECTION D
SCALE: 1" = 1'-0"

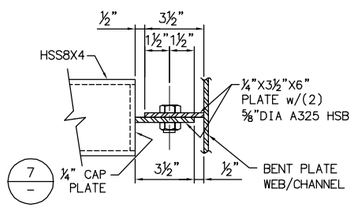

SECTION E
SCALE: 3" = 1'-0"

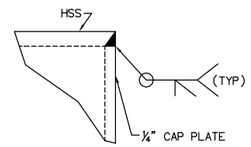

NOTE:
ALL OPEN ENDED HSS MEMBERS SHALL BE CAPPED w/ ¼" CAP PLATE.

DETAIL 7
NTS

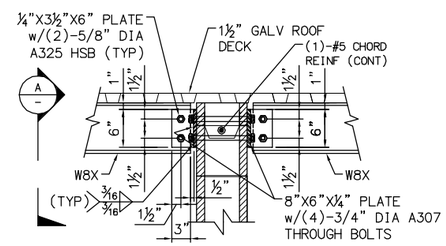

SECTION 8/S115
SCALE: 1" = 1'-0"

LAST SAVED BY: csteleo LAST UPDATED: 01/21/2012 05:24 PM FILENAME: 6232-S115.dwg

No.	DATE	REVISIONS	APPROVED

DESIGNED: FSD
DRAWN: CS
CHECKED: SMS

RBF CONSULTING
carollo
IRVINE RANCH WATER DISTRICT

SALAHUDDIN M. SHEIKH RCE NO. 32677 STRUCTURAL ENGINEER DATE
CINDY MILLER RCE NO. 58116 PROJECT MANAGER DATE
PATRICIA UEMATSU RCE NO. 36762 PRINCIPAL ENGINEER DATE

IRVINE RANCH WATER DISTRICT
BAKER WATER TREATMENT PLANT
PROJECT NO. 11218

TCWD PUMP STATION
TRUSS DETAILS - SHEET 2

DRAWING S115
SHEET 196 OF 632

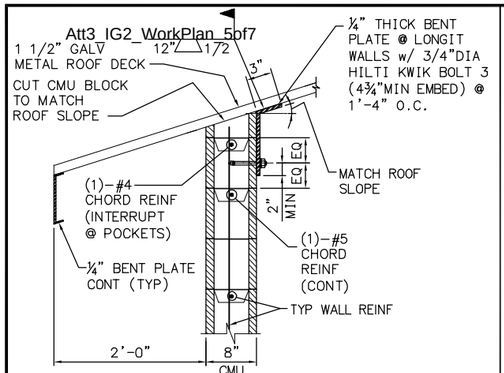

SECTION G S110
N.T.S

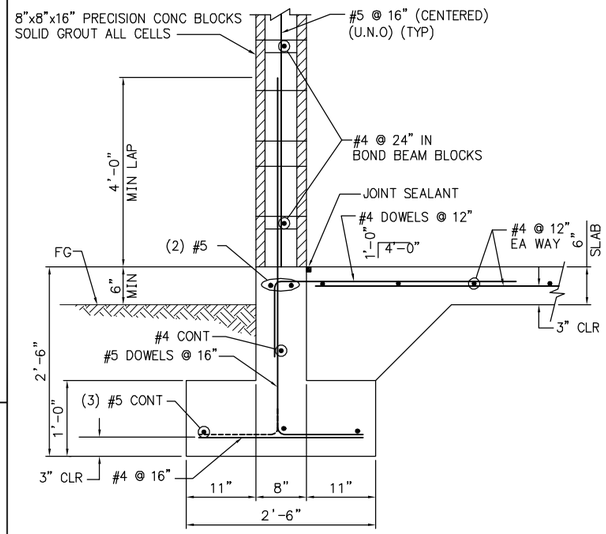

DETAIL 1 – TYP 8" CMU EXTERIOR
N.T.S

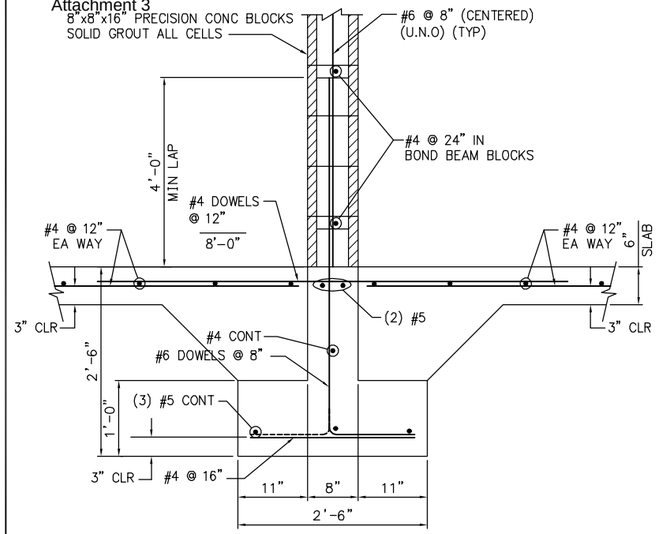

DETAIL 2 – TYP INTERIOR WALL FOOTING
N.T.S

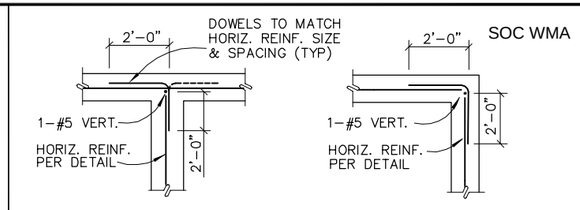

DETAIL 3 – CORNER WALL REINF DETAIL
N.T.S

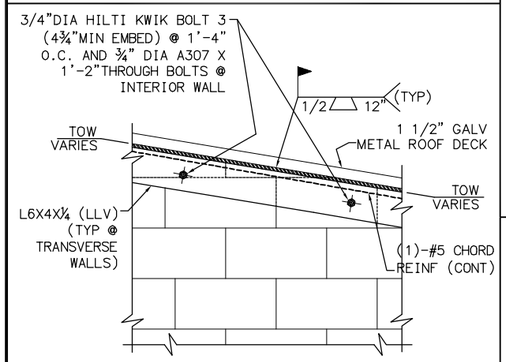

SECTION H S110
N.T.S

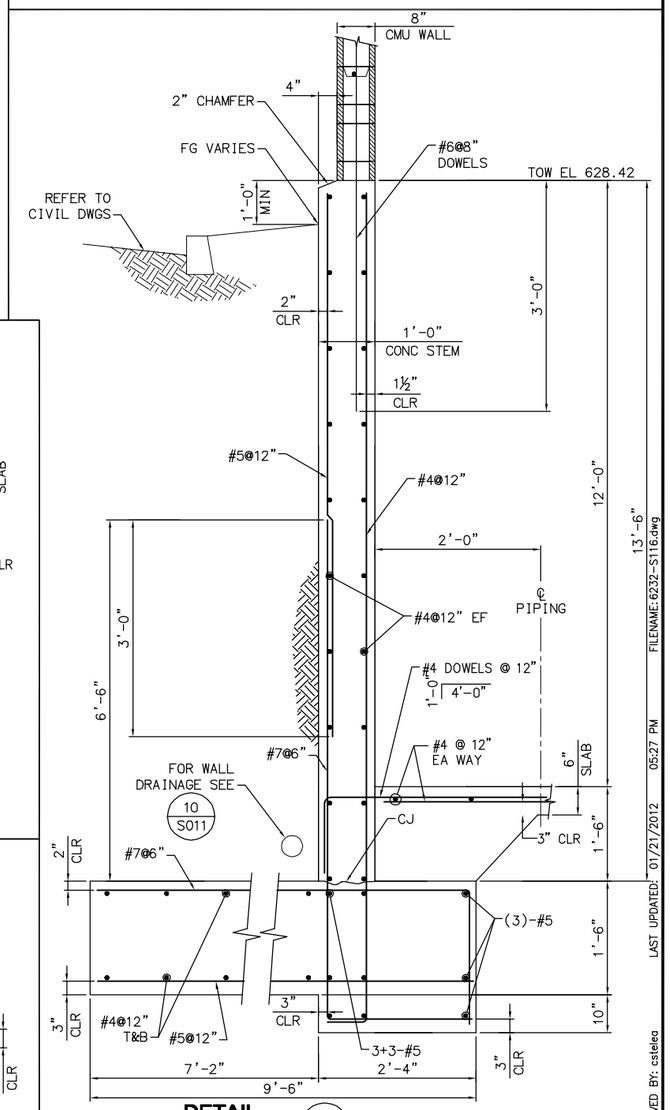

DETAIL 9 – CONCRETE RETAINING WALL DETAIL
N.T.S

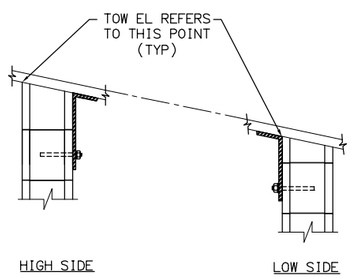

DETAIL 4 – T/CMU WALL ELEVATION DETAIL
N.T.S

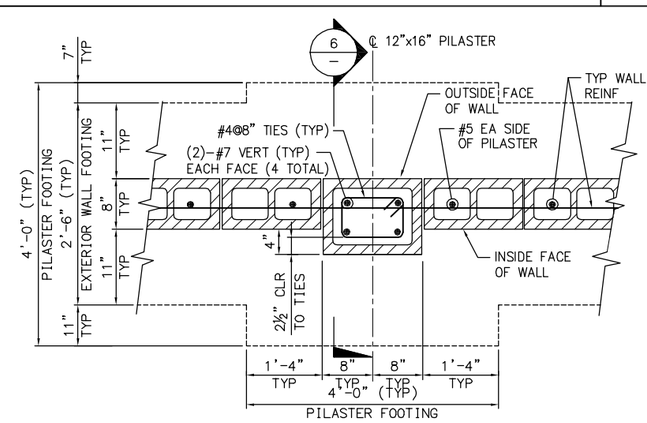

DETAIL 5 – TYP PILASTER FOOTING PLAN
N.T.S

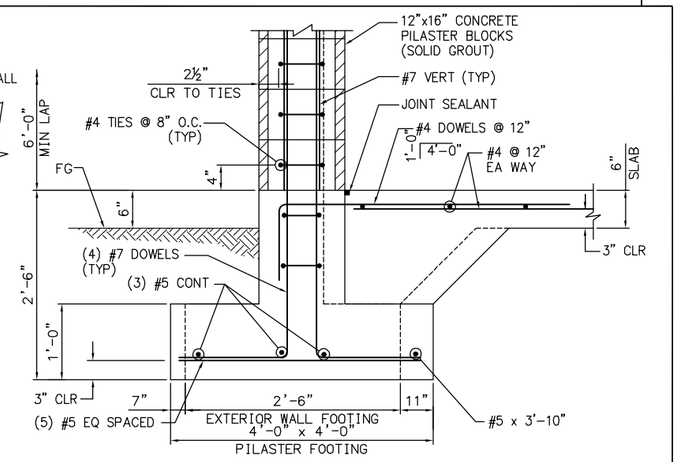

DETAIL 6 – PILASTER FOOTING SECTION
N.T.S

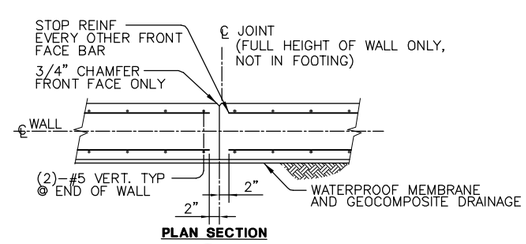

DETAIL 7 – CONC WALL CONTROL JOINT DETAIL
N.T.S

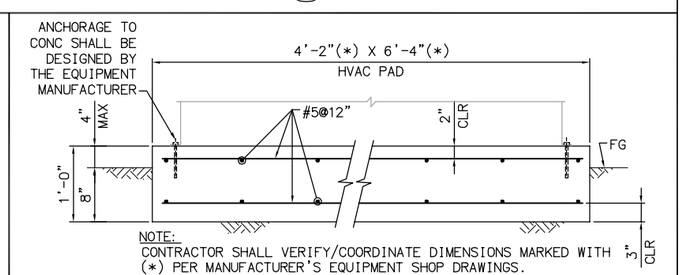

NOTE:
CONTRACTOR SHALL VERIFY/COORDINATE DIMENSIONS MARKED WITH (*) PER MANUFACTURER'S EQUIPMENT SHOP DRAWINGS.

DETAIL 8 – HVAC CONCRETE PAD DETAIL
N.T.S

No.	DATE	REVISIONS	APPROVED

DESIGNED: FSD
DRAWN: CS
CHECKED: SMS

RBF CONSULTING

carollo

IRVINE RANCH WATER DISTRICT

SALAHUDDIN M. SHEIKH	RCE NO. 32677	STRUCTURAL ENGINEER	DATE
CINDY MILLER	RCE NO. 58116	PROJECT MANAGER	DATE
PATRICIA UEMATSU	RCE NO. 36762	PRINCIPAL ENGINEER	DATE

IRVINE RANCH WATER DISTRICT
BAKER WATER TREATMENT PLANT
PROJECT NO. 11218

TCWD PUMP STATION
MISC. SECT. AND DET. - SHEET 1

DRAWING **S116**
SHEET **197** OF **632**

FILENAME: 6232-S116.dwg
LAST UPDATED: 01/21/2012 05:27 PM
LAST SAVED BY: csteleo

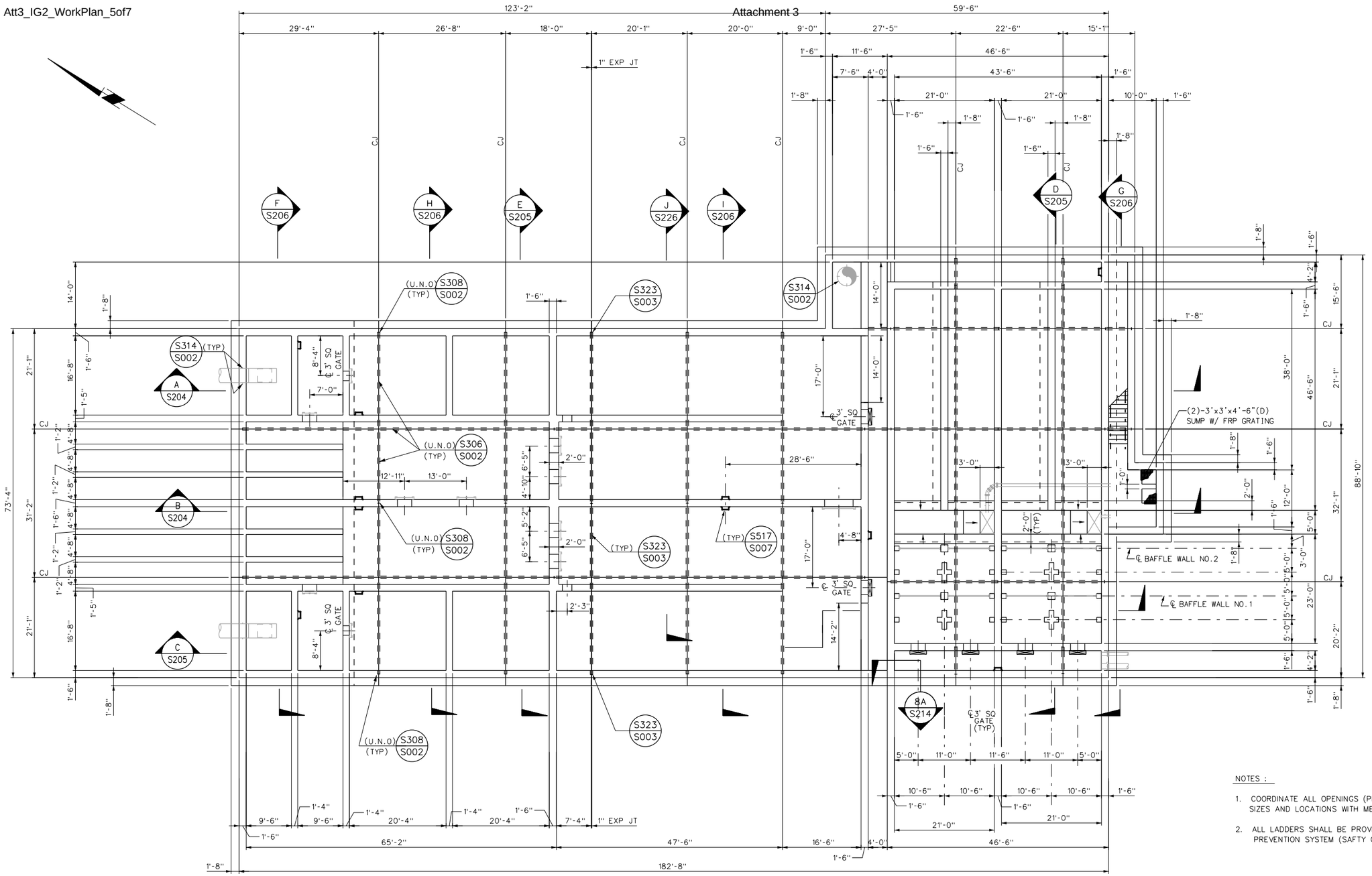

NOTES :

1. COORDINATE ALL OPENINGS (PIPES, GATES, ETC.) SIZES AND LOCATIONS WITH MECH DRAWINGS.
2. ALL LADDERS SHALL BE PROVIDED WITH FALL PREVENTION SYSTEM (SAFTY CLIMB) TYPICAL.

FOUNDATION PLAN

SCALE: 3/32" = 1'-0"

No.	DATE	REVISIONS	APPROVED

DESIGNED: OAA
DRAWN: GMT
CHECKED: OAA

RBF CONSULTING

carollo

IRVINE RANCH WATER DISTRICT

M. OSAMA ABDEL-AAL RCE NO. 34252 PROJECT MANAGER DATE
JIM MEYERHOFER RCE NO. 48451 PROJECT MANAGER DATE
PATRICIA UEMATSU RCE NO. 36762 PRINCIPAL ENGINEER DATE

IRVINE RANCH WATER DISTRICT
BAKER WATER TREATMENT PLANT
PROJECT NO. 11218

FOREBAY FOUNDATION

DRAWING S201

NOTES:

1. COORDINATE WITH MECH DWGS FOR EQUIPMENT PAD LOCATIONS AND SIZES.
2. COORDINATE WITH HVAC DWGS FOR EQUIPMENT AND LOVER LOCATIONS AND SIZES.
3. COORDINATE WITH ARCH DWGS FOR DOOR, WINDOW OPENING SIZES, DIMENSIONS AND STUD WALL LOCATIONS.

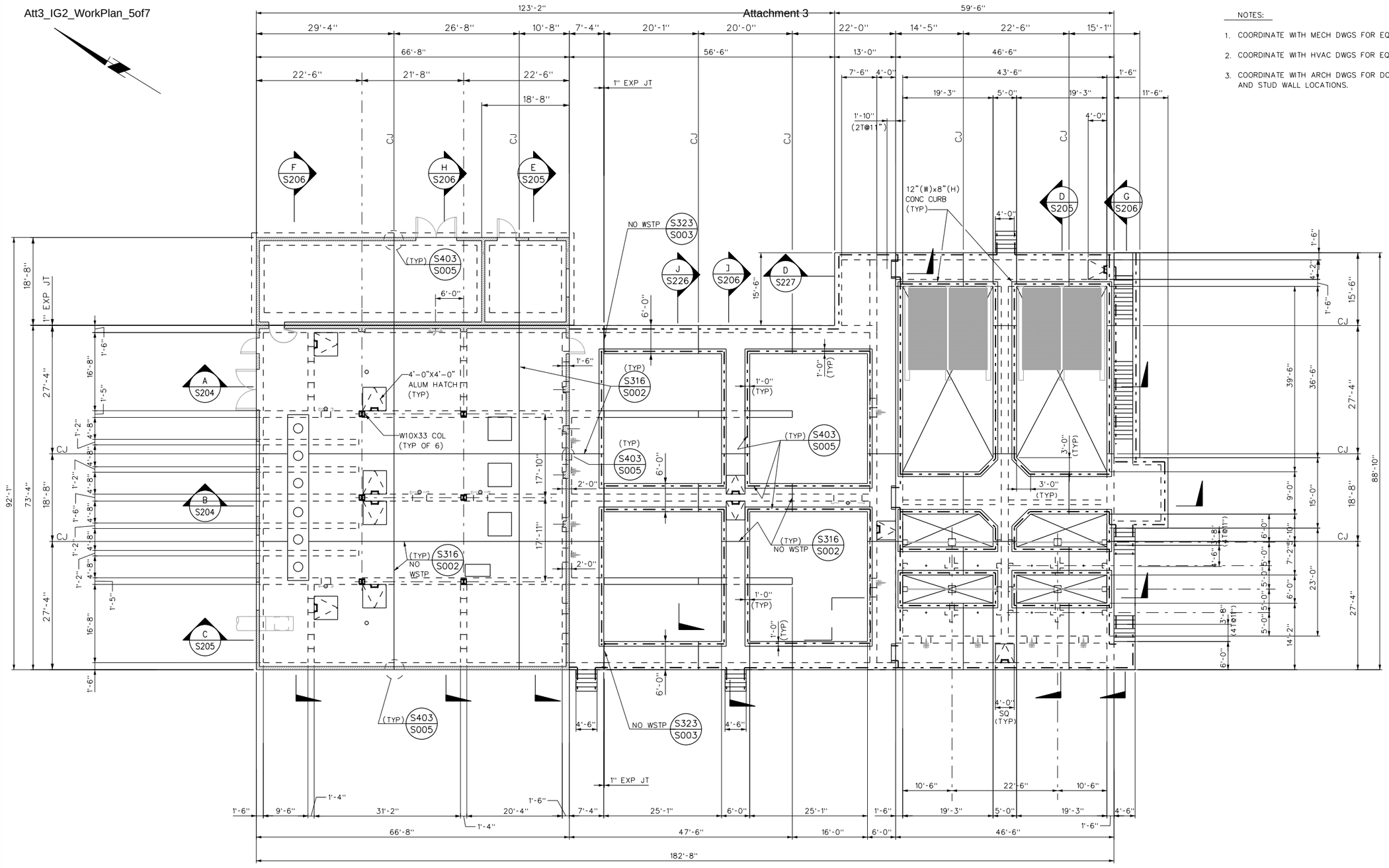

PLAN AT EL 636.00

SCALE: 3/32" = 1'-0"

No.	DATE	REVISIONS	APPROVED

DESIGNED: OAA
DRAWN: GMT
CHECKED: OAA

RBF CONSULTING

carollo

IRVINE RANCH WATER DISTRICT

M. OSAMA ABDEL-AAL RCE NO. 34252 PROJECT MANAGER DATE
JIM MEYERHOFER RCE NO. 48451 PROJECT MANAGER DATE
PATRICIA UEMATSU RCE NO. 36762 PRINCIPAL ENGINEER DATE

IRVINE RANCH WATER DISTRICT
BAKER WATER TREATMENT PLANT
PROJECT NO. 11218

FOREBAY
PLAN AT EL 636.00

DRAWING S202

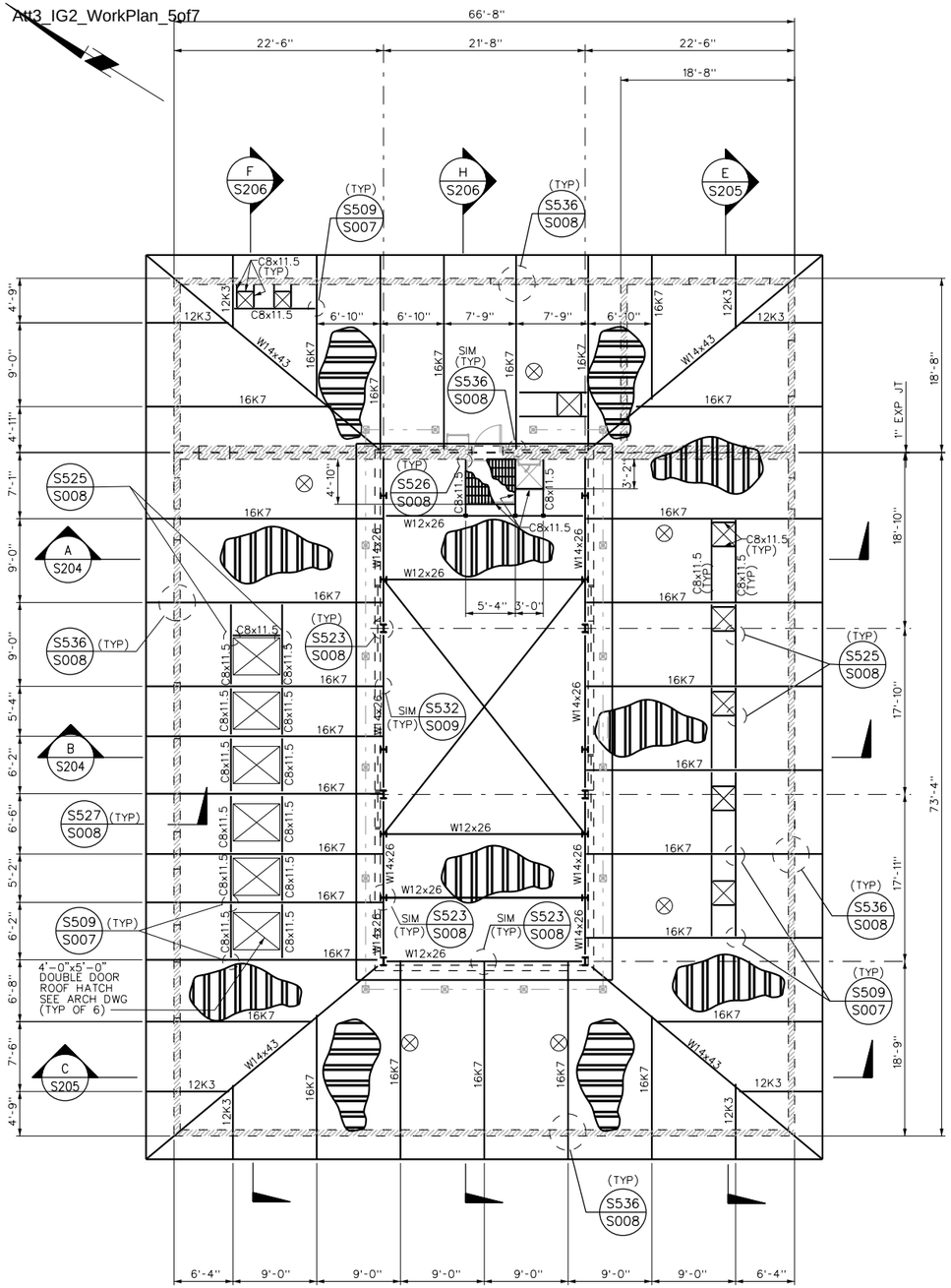

LOWER ROOF FRAMING PLAN

SCALE: 1/8"=1'-0"

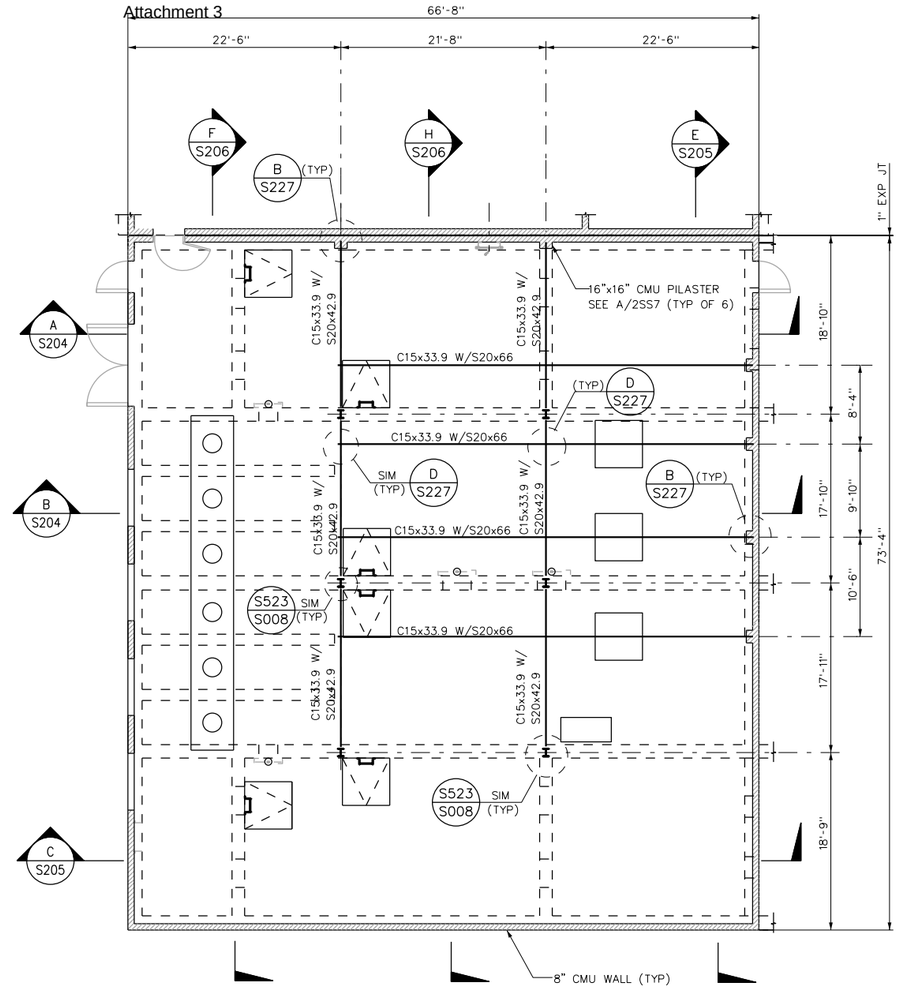

MONORAIL FRAMING PLAN

SCALE: 1/8"=1'-0"

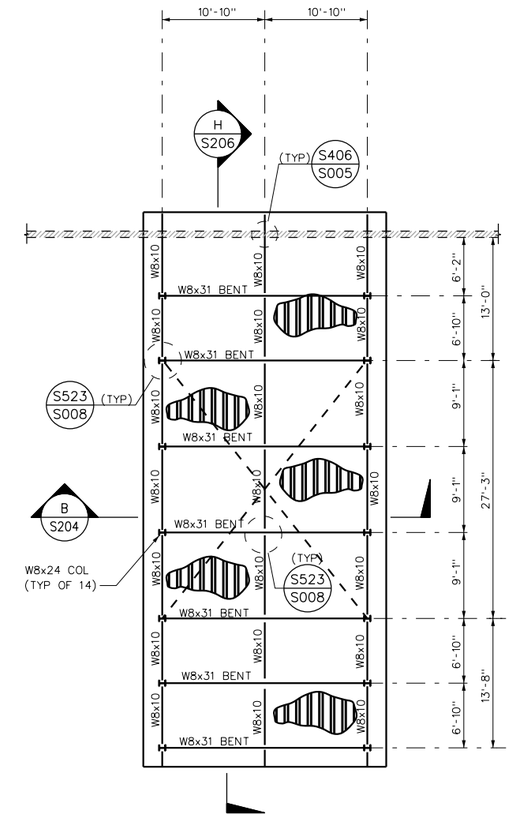

HIGHER ROOF FRAMING PLAN

SCALE: 1/8"=1'-0"

NOTES :

1. SEE SHEET S001 TO S110 FOR STRUCTURAL STANDARD DETAILS AND MISC. PLANS, SECTIONS & DETAILS.
2. ROOF METAL DECK SHALL BE 1 1/2", 18GA. GALV. STEEL DECK, TYPE B-36 BY "VERCO" OR APPROVED EQUAL.

DECK WELDING :

WELD DECK SECTIONS TO ALL SUPPORTING MEMBERS, BEARING PLATES OR SUPPORTS AT BUTT JOINTS, AT INTERMEDIATE SUPPORTS, SIDE SUPPORTS, AND AT END SUPPORTS WITH ½" EFFECTIVE DIAMETER PUDDLE WELDS SPACED AT 12 INCHES ON CENTER AT MEMBERS PARALLEL TO THE RIBS AND AT EVERY RIB VALLEY AT MEMBERS PERPENDICULAR TO THE RIBS.
SIDE LAPS AND LOMGITUDINAL JOINS BETWEEN DECK SECTIONS SHALL BE WELDE WITH 1 1/2" LONG TOP SEAM WELDS, SPACED AT 12" ON CENTER.

3. PROVIDE 4-#5 CHORD REINF. CONTINUOUS AT TOP OF CMU WALLS AT ROOF LEVEL (54" LAP STAGGERED) TYP.
4. ROOF STEEL JOISTS OF TYPE "K" OR "LH" ARE BY VULCRAFT OR EQUAL.
5. ALL CANTILIVERED JOIST TOP CHORD SHALL BE DESIGNED FOR 560 LB/FT AND 1500 LBS CONCENTRATED LOAD.
6. COORDINATE ROOF PENETRATIONS WITH ARCHITECTURAL AND HVAC DRAWINGS.
7. ALL JOISTS SHALL BE DESIGNED FOR NET UPLIFT OF 10 PSF (ASD).
8. FOR SOLAR TUBES SEE ARCHITECTURAL DRAWING FOR LOCATIONS.
9. JOIST MANFACTURER SHALL SUBMIT DESIGN CALC'S TO VERIFY JOIST CAPACITY FOR THE JOIST FOLLOWING LOADING CONDITIONS:

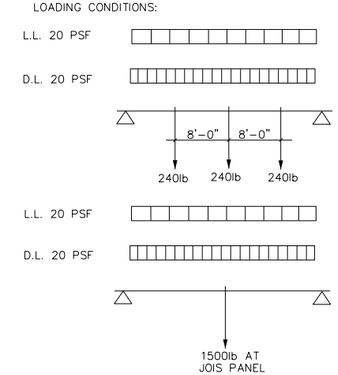

No.	DATE	REVISIONS	APPROVED

DESIGNED: OAA
DRAWN: GMT
CHECKED: OAA

RBF CONSULTING
carollo
IRVINE RANCH WATER DISTRICT

M. OSAMA ABDEL-AAL RCE NO. 34252 PROJECT MANAGER DATE
JIM MEYERHOFER RCE NO. 48451 PROJECT MANAGER DATE
PATRICIA UEMATSU RCE NO. 36762 PRINCIPAL ENGINEER DATE

IRVINE RANCH WATER DISTRICT
BAKER WATER TREATMENT PLANT
PROJECT NO. 11218

FOREBAY
ROOF FRAMING PLAN

DRAWING S203
SHEET 200 OF 632

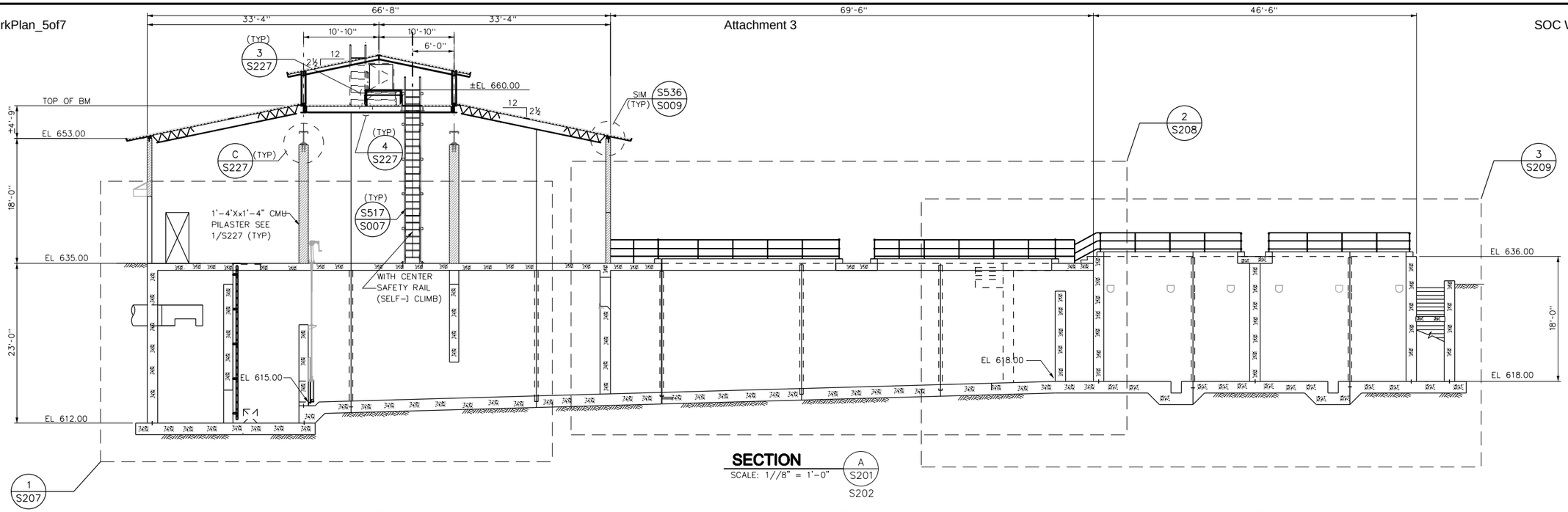

SECTION A S201 S202
SCALE: 1//8" = 1'-0"

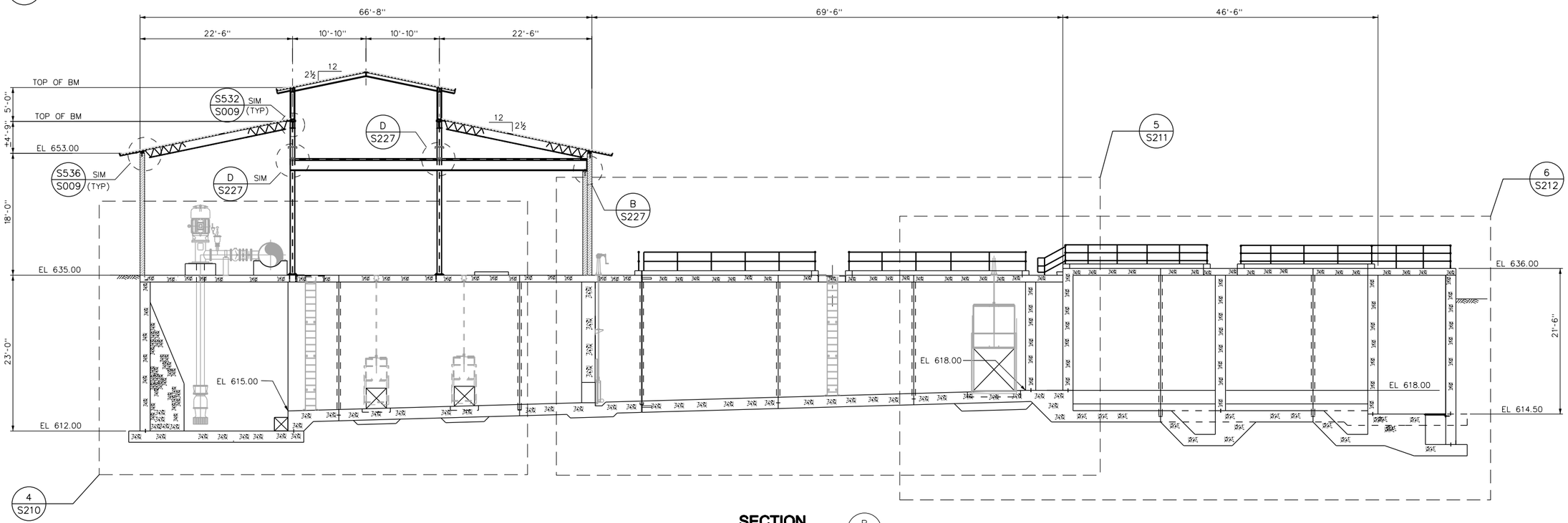

SECTION B S201 S202
SCALE: 1//8" = 1'-0"

No.	DATE	REVISIONS	APPROVED

DESIGNED: OAA
DRAWN: GMT
CHECKED: OAA

RBF CONSULTING

carollo

IRVINE RANCH WATER DISTRICT

M. OSAMA ABDEL-AAL RCE NO. 34252 PROJECT MANAGER DATE
JIM MEYERHOFER RCE NO. 48451 PROJECT MANAGER DATE
PATRICIA UEMATSU RCE NO. 36762 PRINCIPAL ENGINEER DATE

IRVINE RANCH WATER DISTRICT
BAKER WATER TREATMENT PLANT
PROJECT NO. 11218

FOREBAY
SECTION - A AND B

DRAWING
S204
SHEET
201 OF 632

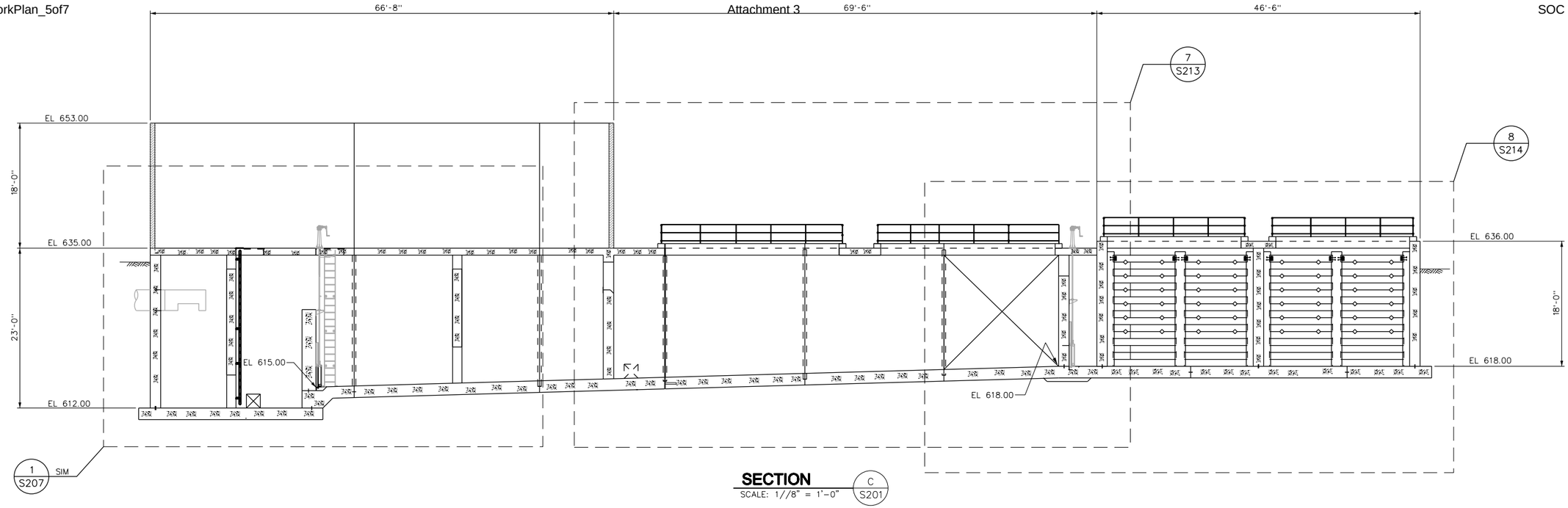

SECTION C S201 / S202
SCALE: 1//8" = 1'-0"

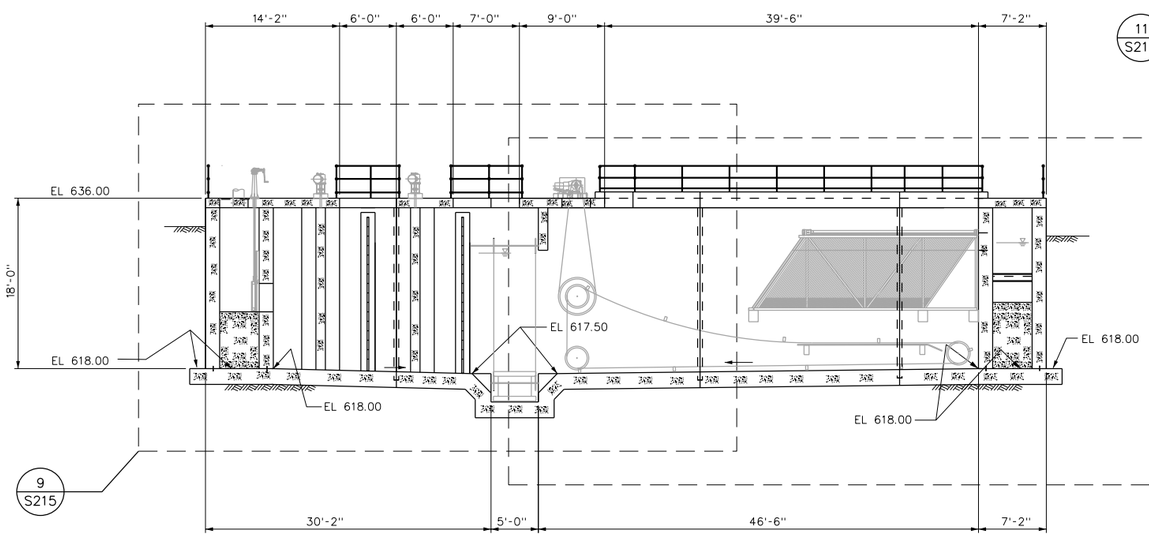

SECTION D S201 / S202
SCALE: 1//8" = 1'-0"

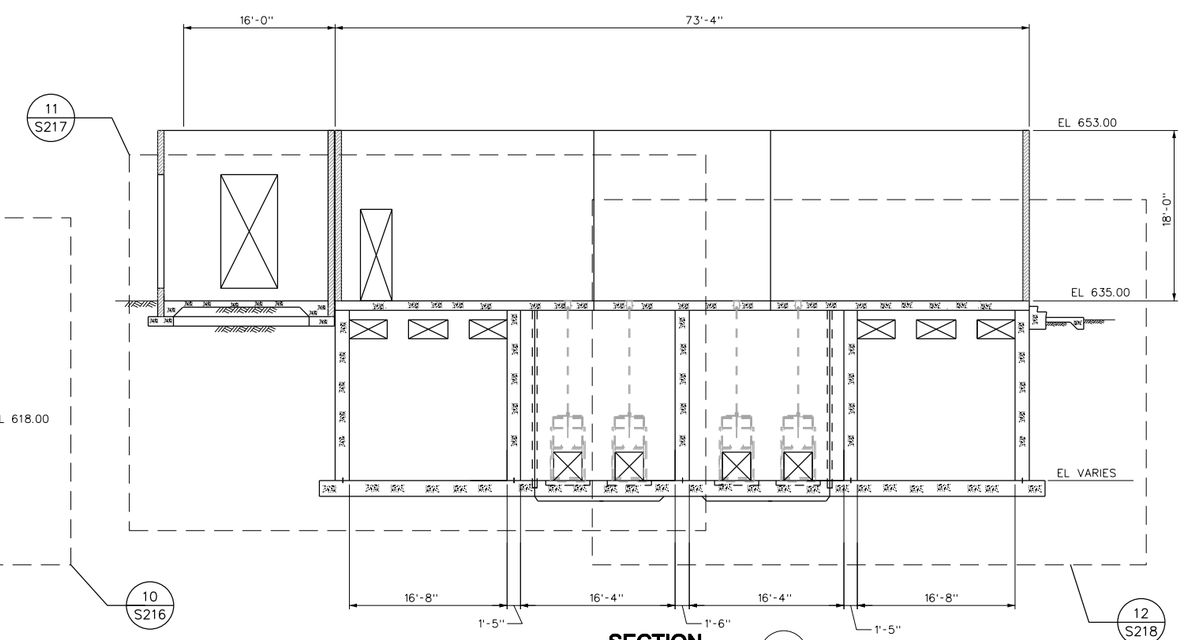

SECTION E S201 / S202
SCALE: 1//8" = 1'-0"

No.	DATE	REVISIONS	APPROVED

DESIGNED: OAA
DRAWN: GMT
CHECKED: OAA

RBF CONSULTING

carollo

IRVINE RANCH WATER DISTRICT

M. OSAMA ABDEL-AAL RCE NO. 34252 PROJECT MANAGER DATE
JIM MEYERHOFER RCE NO. 48451 PROJECT MANAGER DATE
PATRICIA UEMATSU RCE NO. 36762 PRINCIPAL ENGINEER DATE

IRVINE RANCH WATER DISTRICT
BAKER WATER TREATMENT PLANT
PROJECT NO. 11218

FOREBAY
SECTION - C, D AND E

DRAWING
S205
SHEET
202 OF 632

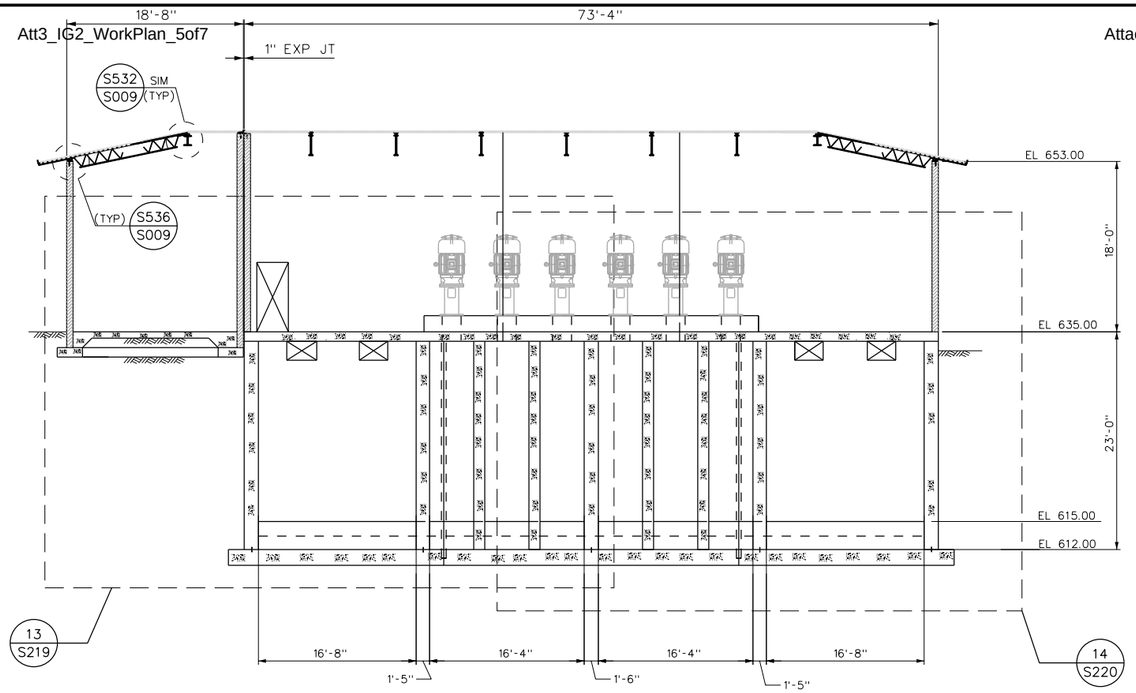

SECTION F S201 / S202
SCALE: 1/8" = 1'-0"

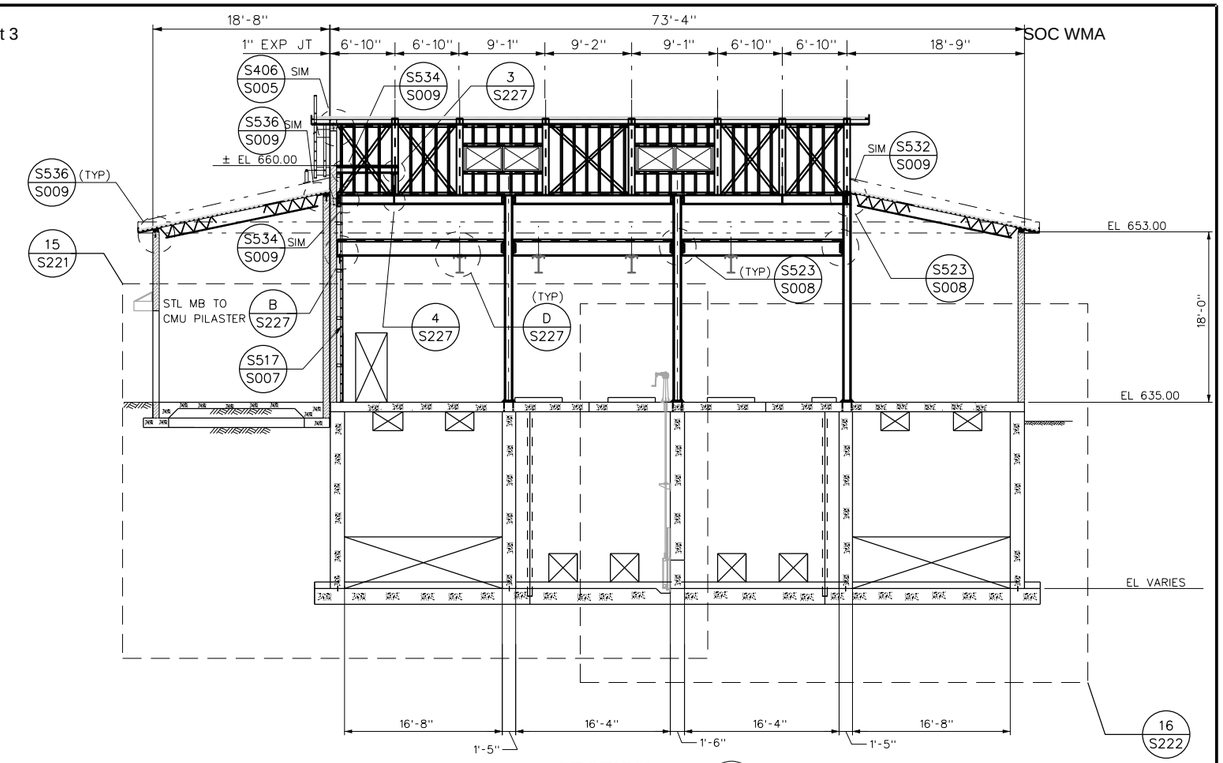

SECTION H S201 / S202
SCALE: 1/8" = 1'-0"

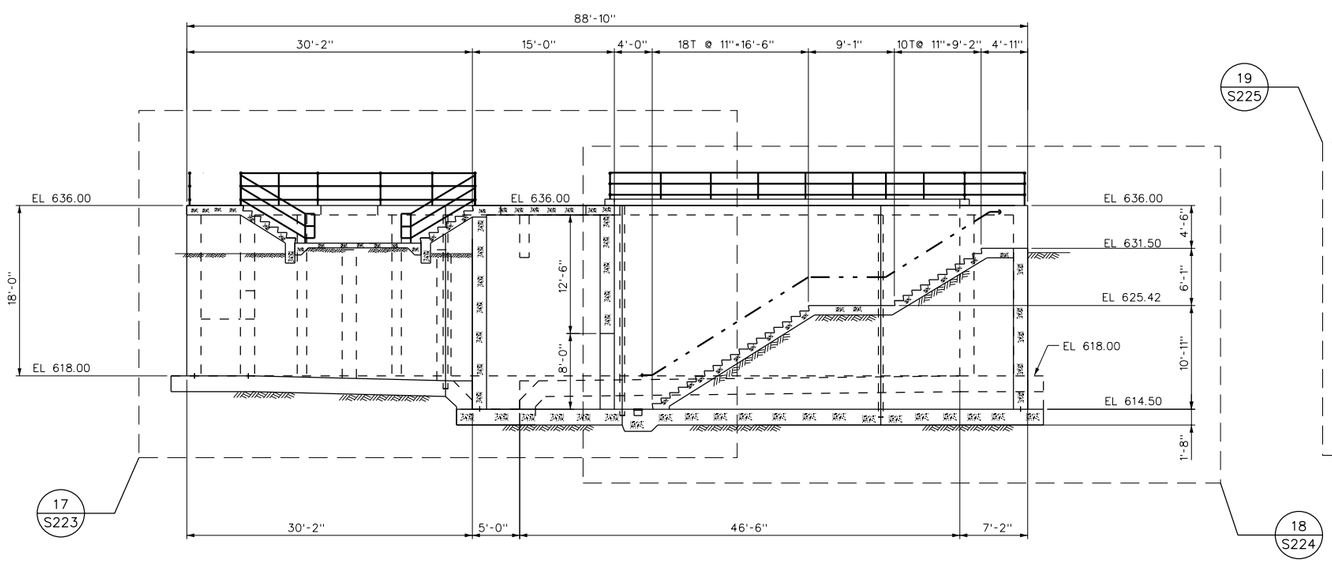

SECTION G S201 / S202
SCALE: 1/8" = 1'-0"

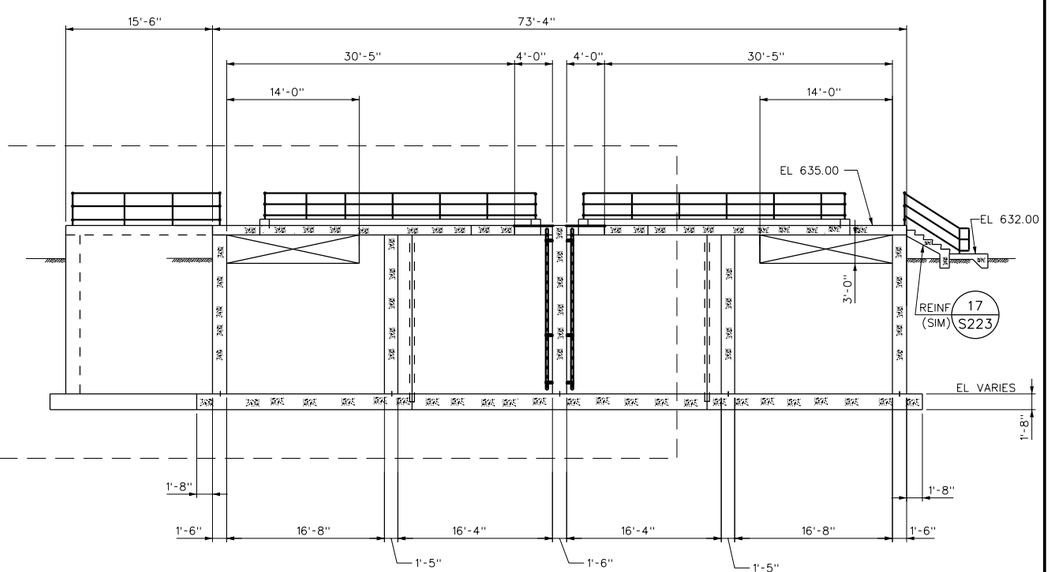

SECTION J S201 / S202
SCALE: 1/8" = 1'-0"

No.	DATE	REVISIONS	APPROVED

DESIGNED: OAA
DRAWN: GMT
CHECKED: OAA

RBF CONSULTING

carollo

IRVINE RANCH WATER DISTRICT

M. OSAMA ABDEL-AAL RCE NO. 34252 PROJECT MANAGER DATE
JIM MEYERHOFER RCE NO. 48451 PROJECT MANAGER DATE
PATRICIA UEMATSU RCE NO. 36762 PRINCIPAL ENGINEER DATE

IRVINE RANCH WATER DISTRICT
BAKER WATER TREATMENT PLANT
PROJECT NO. 11218

FOREBAY
SECTION - F AND G

DRAWING
S206
SHEET
203 OF 632

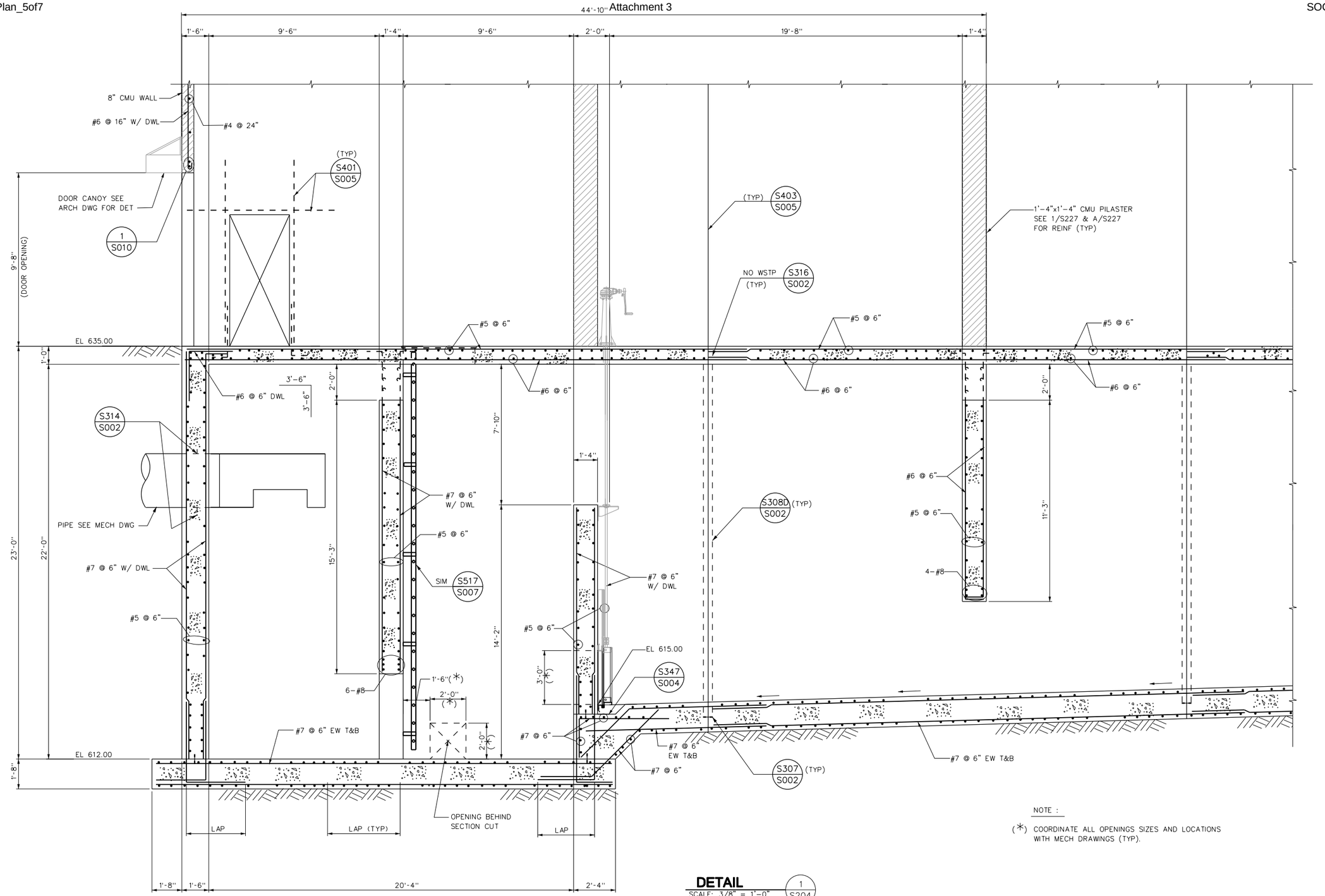

NOTE :

(*) COORDINATE ALL OPENINGS SIZES AND LOCATIONS WITH MECH DRAWINGS (TYP).

DETAIL 1 / S204
SCALE: 3/8" = 1'-0"

No.	DATE	REVISIONS	APPROVED

DESIGNED: OAA
DRAWN: GMT
CHECKED: OAA

RBF CONSULTING

carollo

IRVINE RANCH WATER DISTRICT

M. OSAMA ABDEL-AAL RCE NO. 34252 PROJECT MANAGER DATE
JIM MEYERHOFER RCE NO. 48451 PROJECT MANAGER DATE
PATRICIA UEMATSU RCE NO. 36762 PRINCIPAL ENGINEER DATE

IRVINE RANCH WATER DISTRICT
BAKER WATER TREATMENT PLANT
PROJECT NO. 11218

FOREBAY DETAIL - 1

DRAWING **S207**
SHEET **204** OF 632

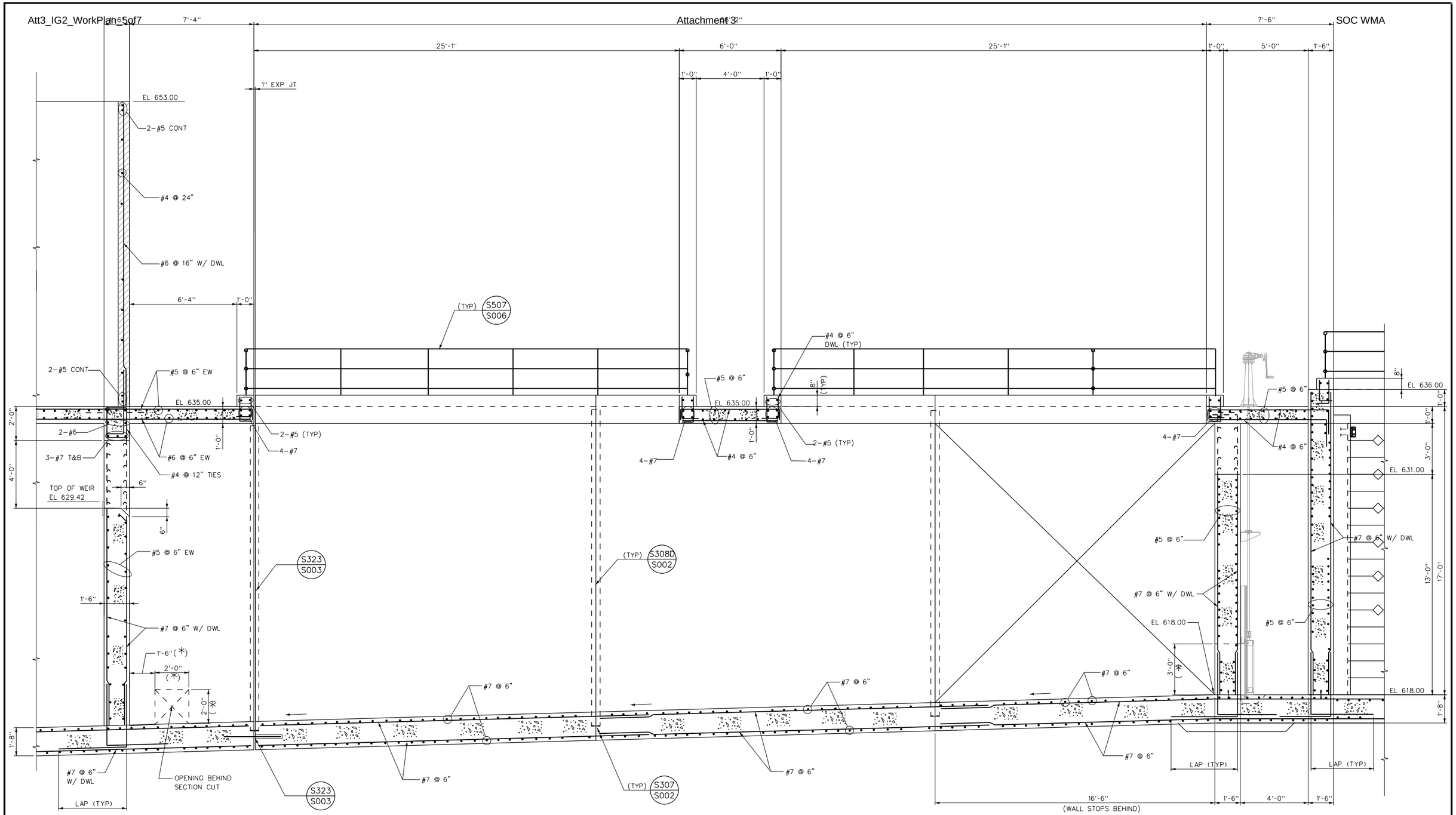

NOTE :

(*) COORDINATE ALL OPENINGS SIZES AND LOCATIONS WITH MECH DRAWINGS (TYP).

DETAIL 7 / S205
SCALE: 3/8" = 1'-0"

No.	DATE	REVISIONS	APPROVED

DESIGNED: OAA
DRAWN: GMT
CHECKED: OAA

RBF CONSULTING

carollo

IRVINE RANCH WATER DISTRICT

M. OSAMA ABDEL-AAL	RCE NO. 34252	PROJECT MANAGER	DATE
JIM MEYERHOFER	RCE NO. 48451	PROJECT MANAGER	DATE
PATRICIA UEMATSU	RCE NO. 36762	PRINCIPAL ENGINEER	DATE

IRVINE RANCH WATER DISTRICT
BAKER WATER TREATMENT PLANT
PROJECT NO. 11218

FOREBAY DETAIL - 2

DRAWING **S208**
SHEET **205** OF 632

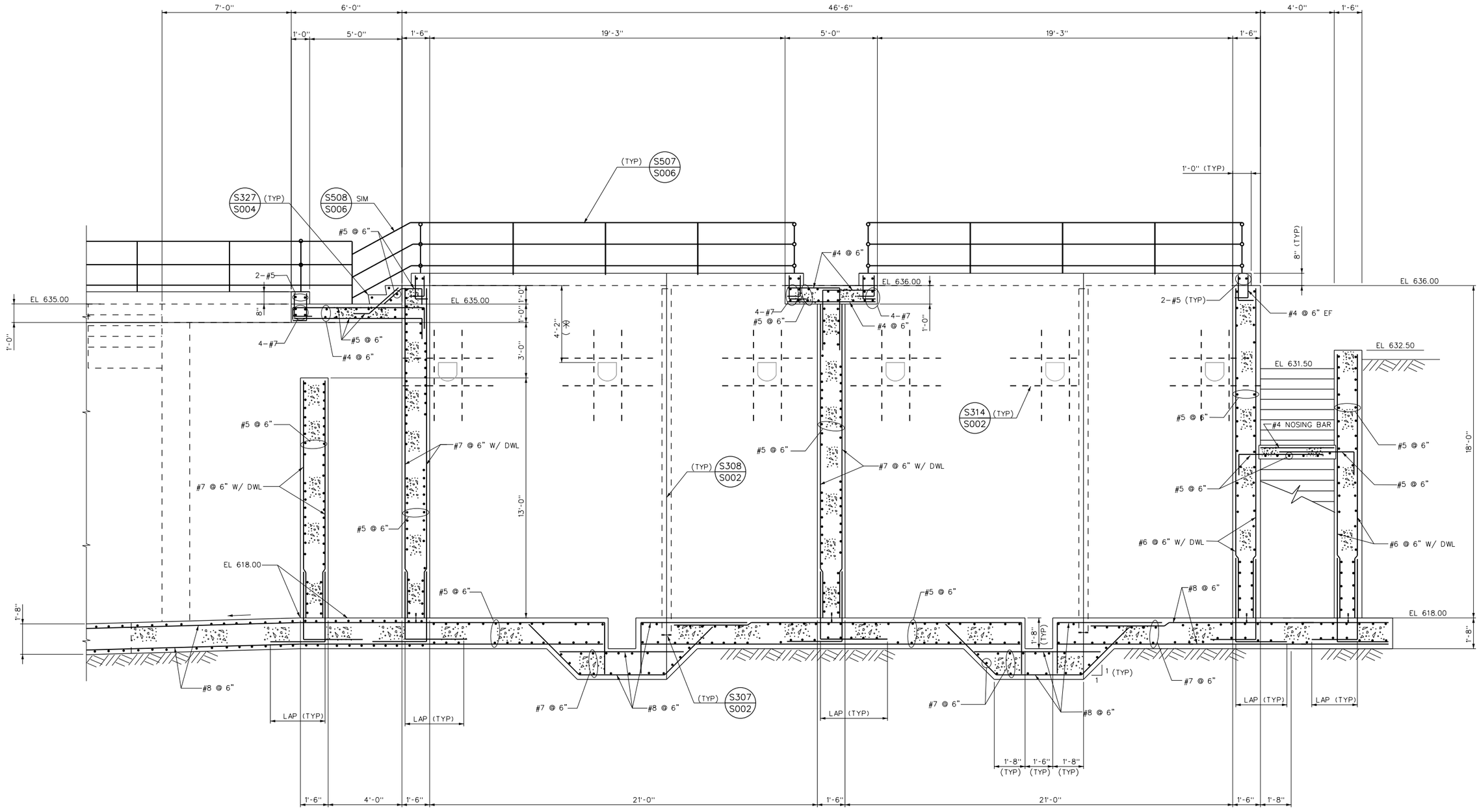

DETAIL 3/S204
SCALE: 3/8" = 1'-0"

NOTE :

(*) COORDINATE TROUGH SIZES AND LOCATIONS WITH MFR'S SHOP DRAWINGS (TYP).

No.	DATE	REVISIONS	APPROVED

DESIGNED: OAA
DRAWN: GMT
CHECKED: OAA

RBF CONSULTING

carollo

IRVINE RANCH WATER DISTRICT

M. OSAMA ABDEL-AAL	RCE NO. 34252	PROJECT MANAGER	DATE
JIM MEYERHOFER	RCE NO. 48451	PROJECT MANAGER	DATE
PATRICIA UEMATSU	RCE NO. 36762	PRINCIPAL ENGINEER	DATE

IRVINE RANCH WATER DISTRICT
BAKER WATER TREATMENT PLANT
PROJECT NO. 11218

FOREBAY DETAIL - 3

DRAWING **S209**

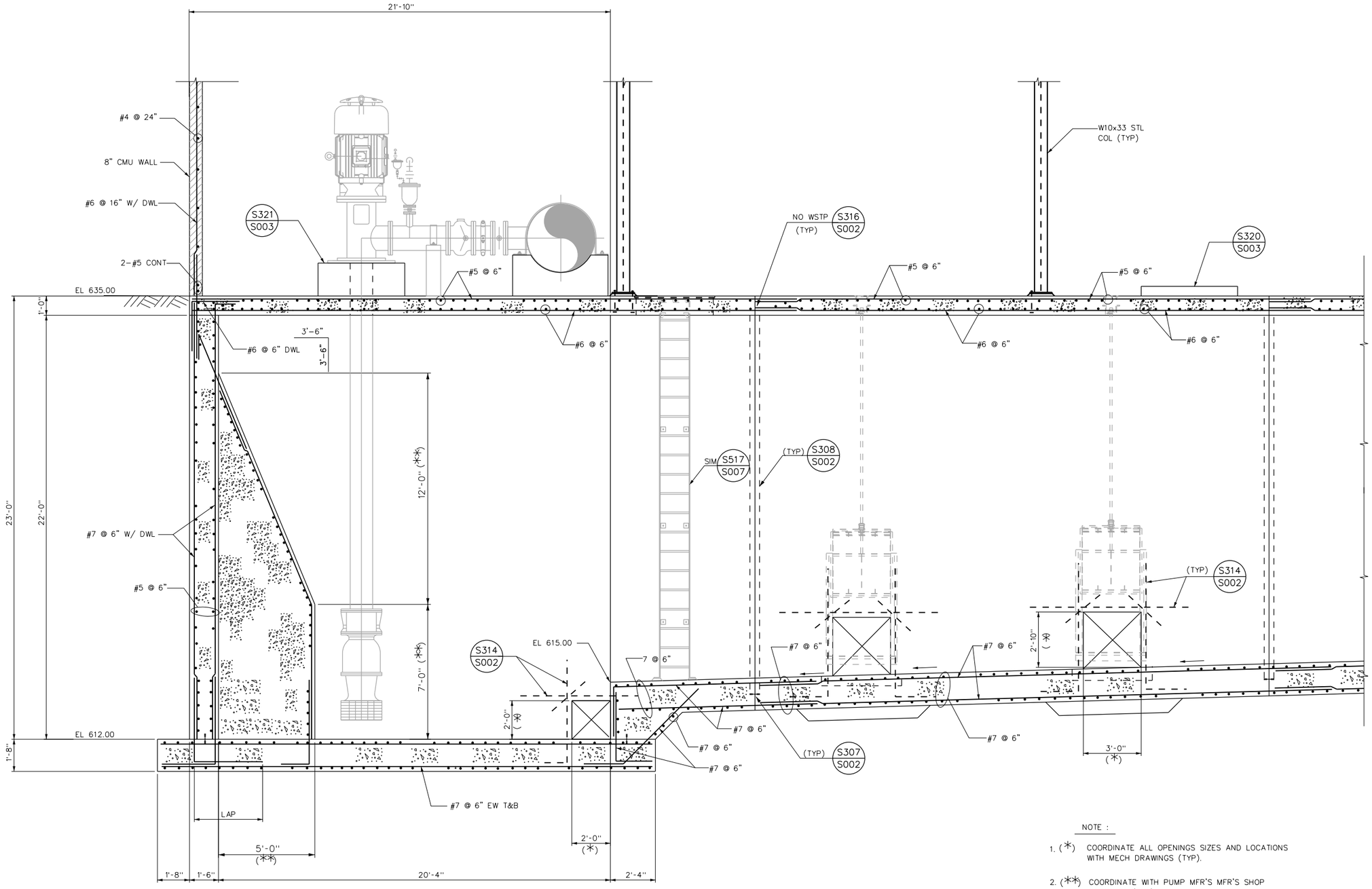

NOTE :

1. (*) COORDINATE ALL OPENINGS SIZES AND LOCATIONS WITH MECH DRAWINGS (TYP).

2. (**) COORDINATE WITH PUMP MFR'S MFR'S SHOP DRAWINGS (TYP).

DETAIL 4 / S204

SCALE: 3/8" = 1'-0"

No.	DATE	REVISIONS	APPROVED

DESIGNED: OAA
DRAWN: GMT
CHECKED: OAA

RBF CONSULTING

carollo

IRVINE RANCH WATER DISTRICT

M. OSAMA ABDEL-AAL RCE NO. 34252 PROJECT MANAGER DATE
JIM MEYERHOFER RCE NO. 48451 PROJECT MANAGER DATE
PATRICIA UEMATSU RCE NO. 36762 PRINCIPAL ENGINEER DATE

IRVINE RANCH WATER DISTRICT
BAKER WATER TREATMENT PLANT
PROJECT NO. 11218

FOREBAY DETAIL - 4

DRAWING **S210**

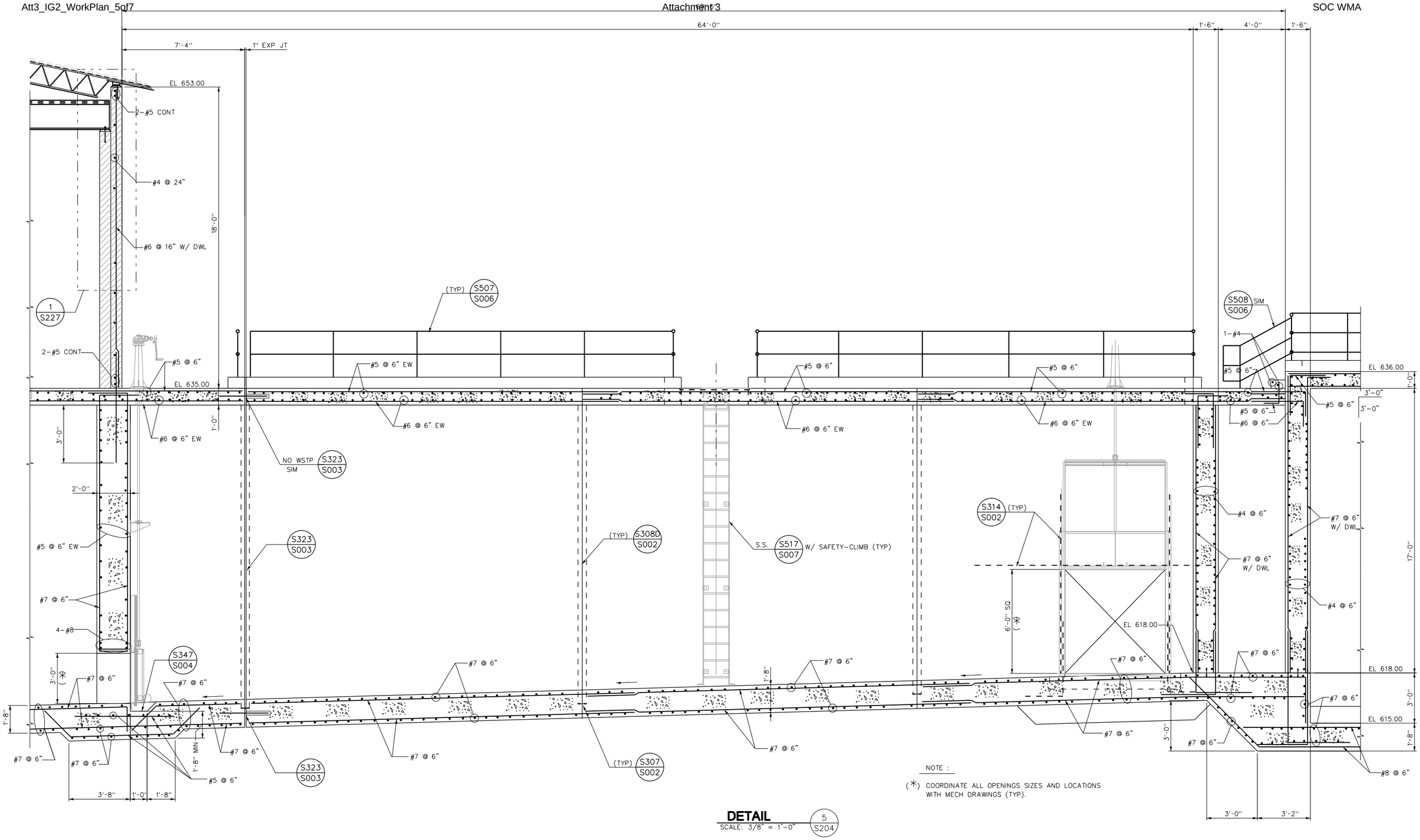

NOTE :

(*) COORDINATE ALL OPENINGS SIZES AND LOCATIONS WITH MECH DRAWINGS (TYP).

DETAIL 5 / S204
SCALE: 3/8" = 1'-0"

No.	DATE	REVISIONS	APPROVED

DESIGNED: OAA
DRAWN: GMT
CHECKED: OAA

RBF CONSULTING

carollo

IRVINE RANCH WATER DISTRICT

M. OSAMA ABDEL-AAL	RCE NO. 34252	PROJECT MANAGER	DATE
JIM MEYERHOFER	RCE NO. 48451	PROJECT MANAGER	DATE
PATRICIA UEMATSU	RCE NO. 36762	PRINCIPAL ENGINEER	DATE

IRVINE RANCH WATER DISTRICT
BAKER WATER TREATMENT PLANT
PROJECT NO. 11218

FOREBAY DETAIL - 5

DRAWING
S211
SHEET
208 OF 632

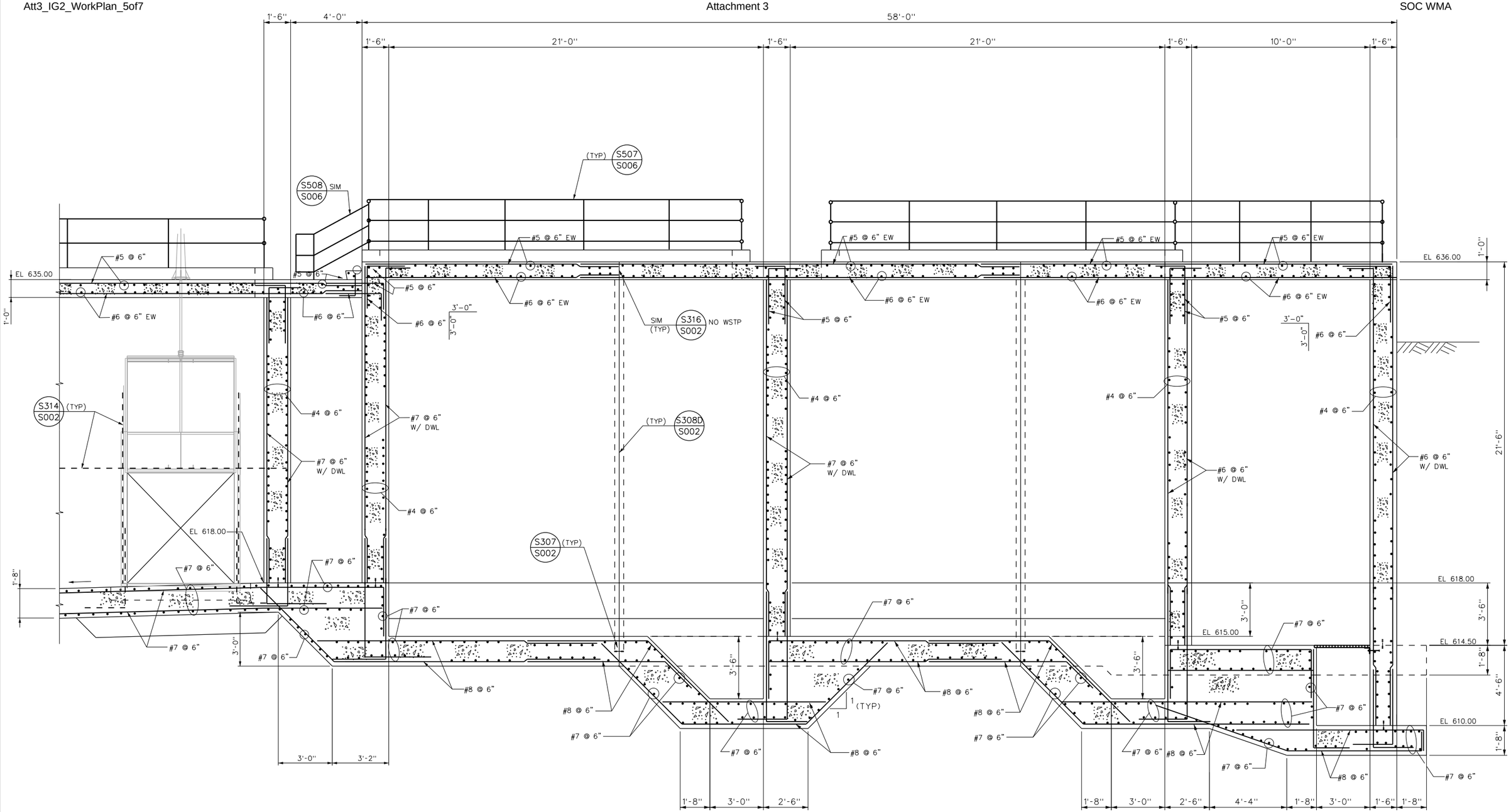

DETAIL 6 S204
SCALE: 3/8" = 1'-0"

No.	DATE	REVISIONS	APPROVED

DESIGNED: OAA
DRAWN: GMT
CHECKED: OAA

RBF CONSULTING

carollo

IRVINE RANCH WATER DISTRICT

M. OSAMA ABDEL-AAL RCE NO. 34252 PROJECT MANAGER DATE
JIM MEYERHOFER RCE NO. 48451 PROJECT MANAGER DATE
PATRICIA UEMATSU RCE NO. 36762 PRINCIPAL ENGINEER DATE

IRVINE RANCH WATER DISTRICT
BAKER WATER TREATMENT PLANT
PROJECT NO. 11218

FOREBAY DETAIL - 6

DRAWING **S212**

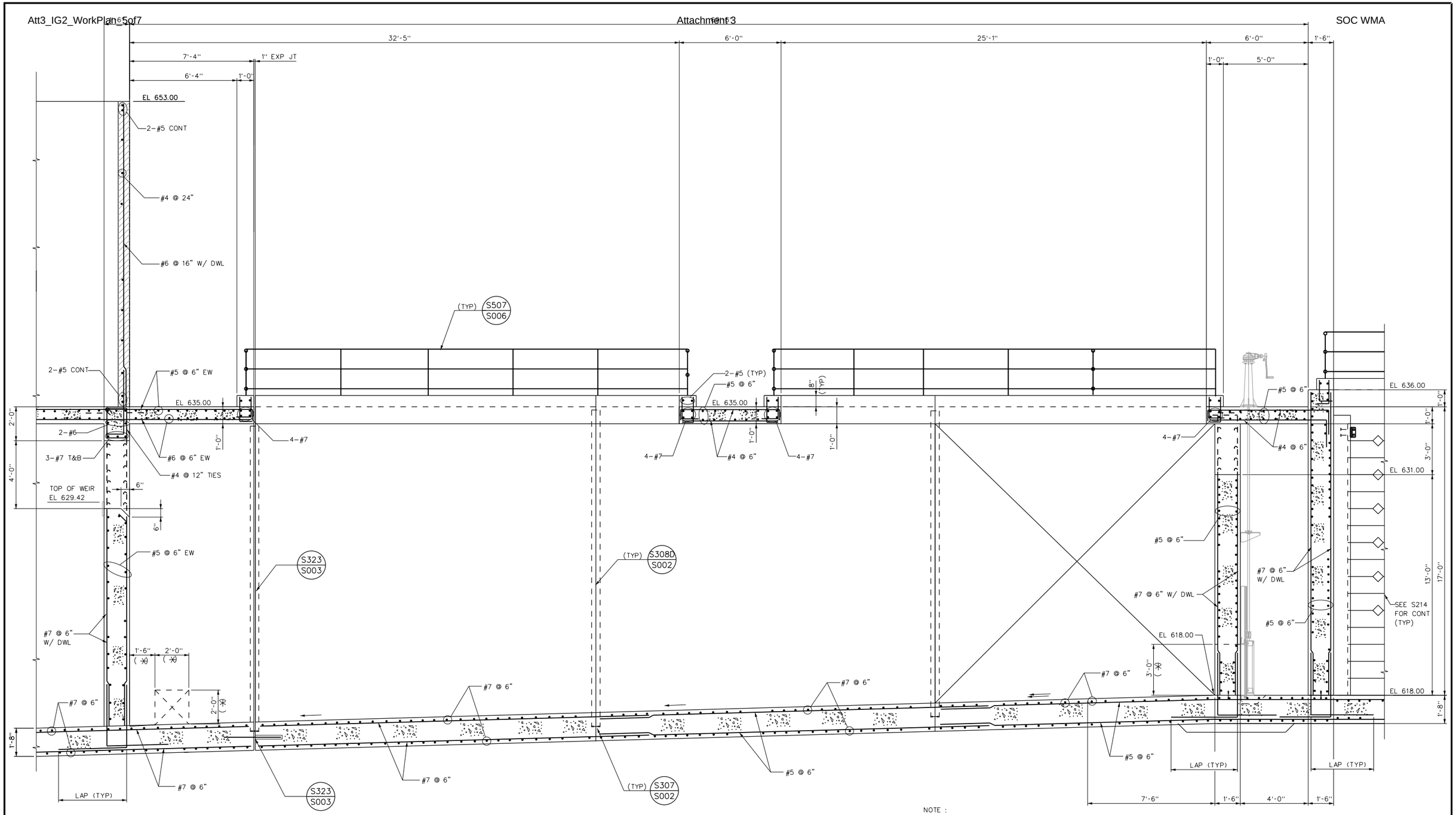

NOTE :

(*) COORDINATE ALL OPENINGS SIZES AND LOCATIONS WITH MECH DRAWINGS (TYP).

DETAIL 7 / S205
SCALE: 3/8" = 1'-0"

No.	DATE	REVISIONS	APPROVED

DESIGNED: OAA
DRAWN: GMT
CHECKED: OAA

RBF CONSULTING

carollo

IRVINE RANCH WATER DISTRICT

M. OSAMA ABDEL-AAL RCE NO. 34252 PROJECT MANAGER DATE
JIM MEYERHOFER RCE NO. 48451 PROJECT MANAGER DATE
PATRICIA UEMATSU RCE NO. 36762 PRINCIPAL ENGINEER DATE

IRVINE RANCH WATER DISTRICT
BAKER WATER TREATMENT PLANT
PROJECT NO. 11218

FOREBAY DETAIL - 7

DRAWING
S213
SHEET
210 OF 632

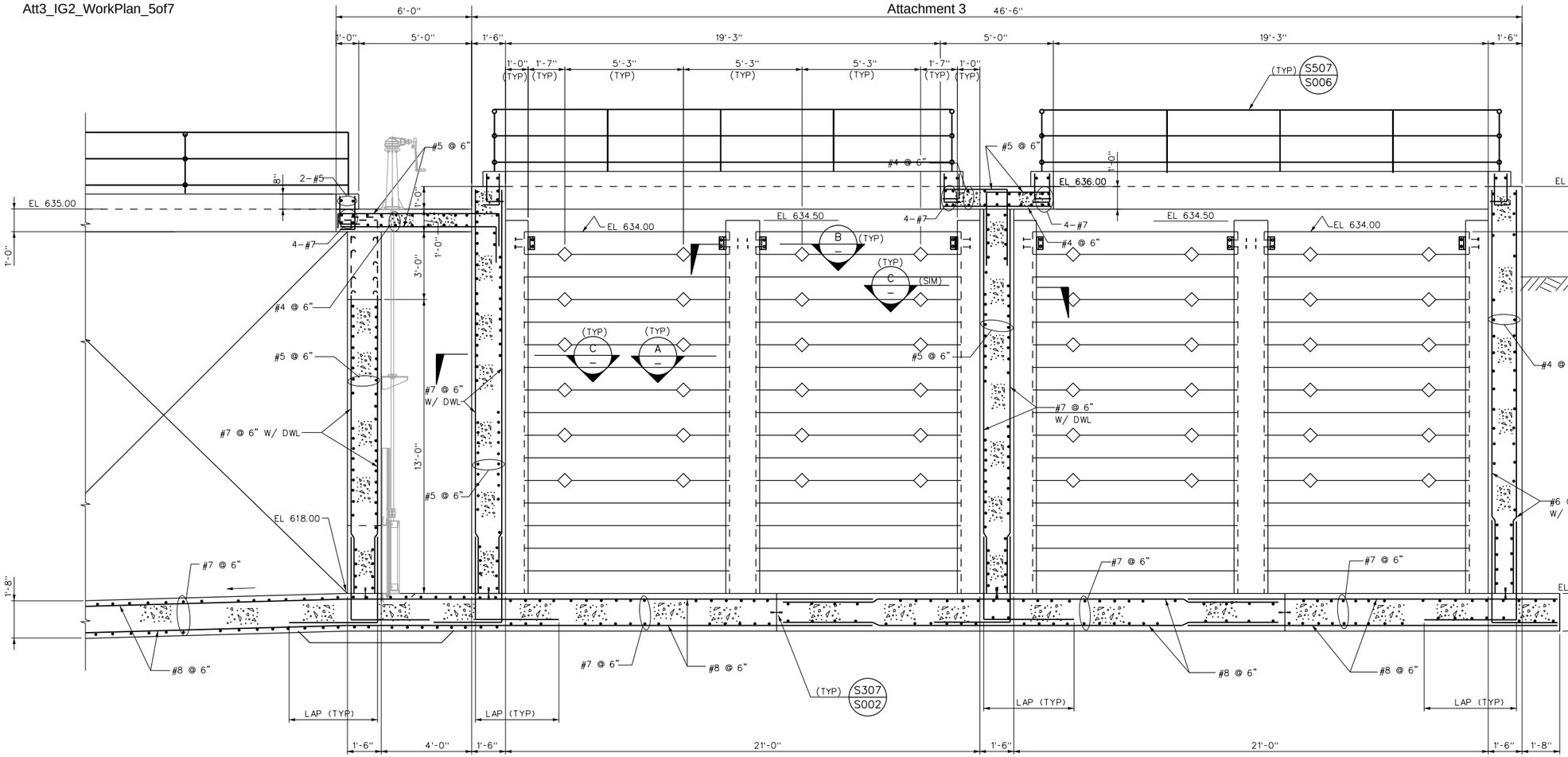

DETAIL 8 / S205
SCALE: 3/8" = 1'-0"

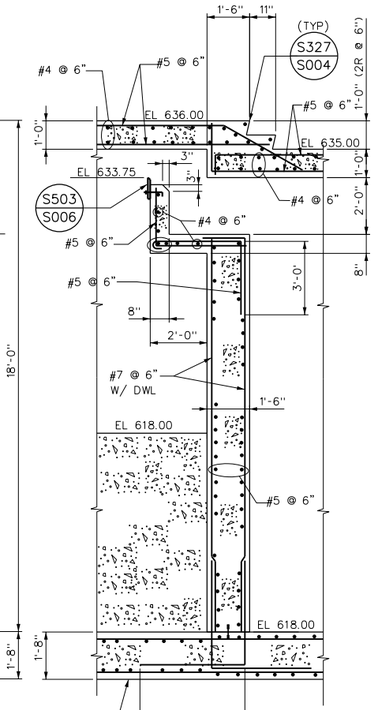

8 FOR REINF (TYP)

DETAIL 8A / S205
SCALE: 3/8" = 1'-0"

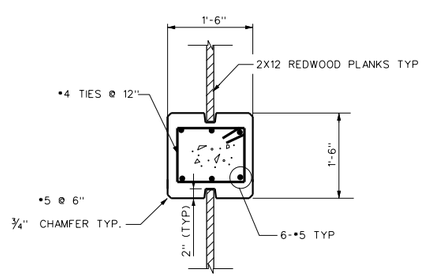

DETAIL A
SCALE: 3/4" = 1'-0"

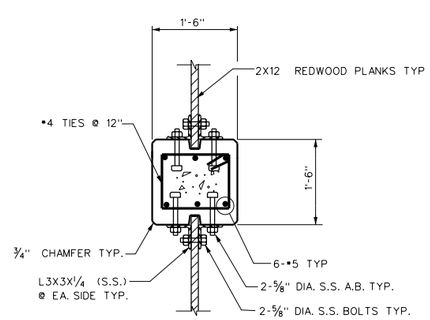

DETAIL B
SCALE: 3/4" = 1'-0"

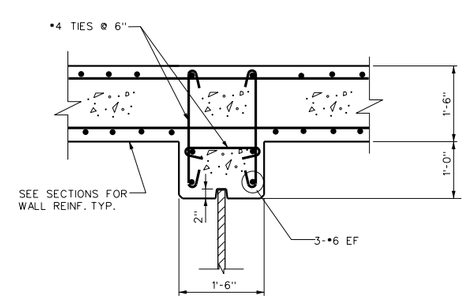

DETAIL C
SCALE: 3/4" = 1'-0"

ORIFICE SIZE, SPACING OF EACH BAFFLE WALL				
BAFFLE WALL NUMBER	NO. OF ORIFICES ROWS	NO. OF ORIFICES PER ROW PER BASIN	TOTAL NO. OF ORIFICES PER BASIN	ORIFICE SIZE
1	6	4	24	4"x4"
2	6	4	24	4.5"x4.5"

No.	DATE	REVISIONS	APPROVED

DESIGNED: OAA
DRAWN: GMT
CHECKED: OAA

RBF CONSULTING

carollo

IRVINE RANCH WATER DISTRICT

M. OSAMA ABDEL-AAL RCE NO. 34252 PROJECT MANAGER DATE
JIM MEYERHOFER RCE NO. 48451 PROJECT MANAGER DATE
PATRICIA UEMATSU RCE NO. 36762 PRINCIPAL ENGINEER DATE

IRVINE RANCH WATER DISTRICT
BAKER WATER TREATMENT PLANT
PROJECT NO. 11218

FOREBAY
DETAIL - 8

DRAWING S214

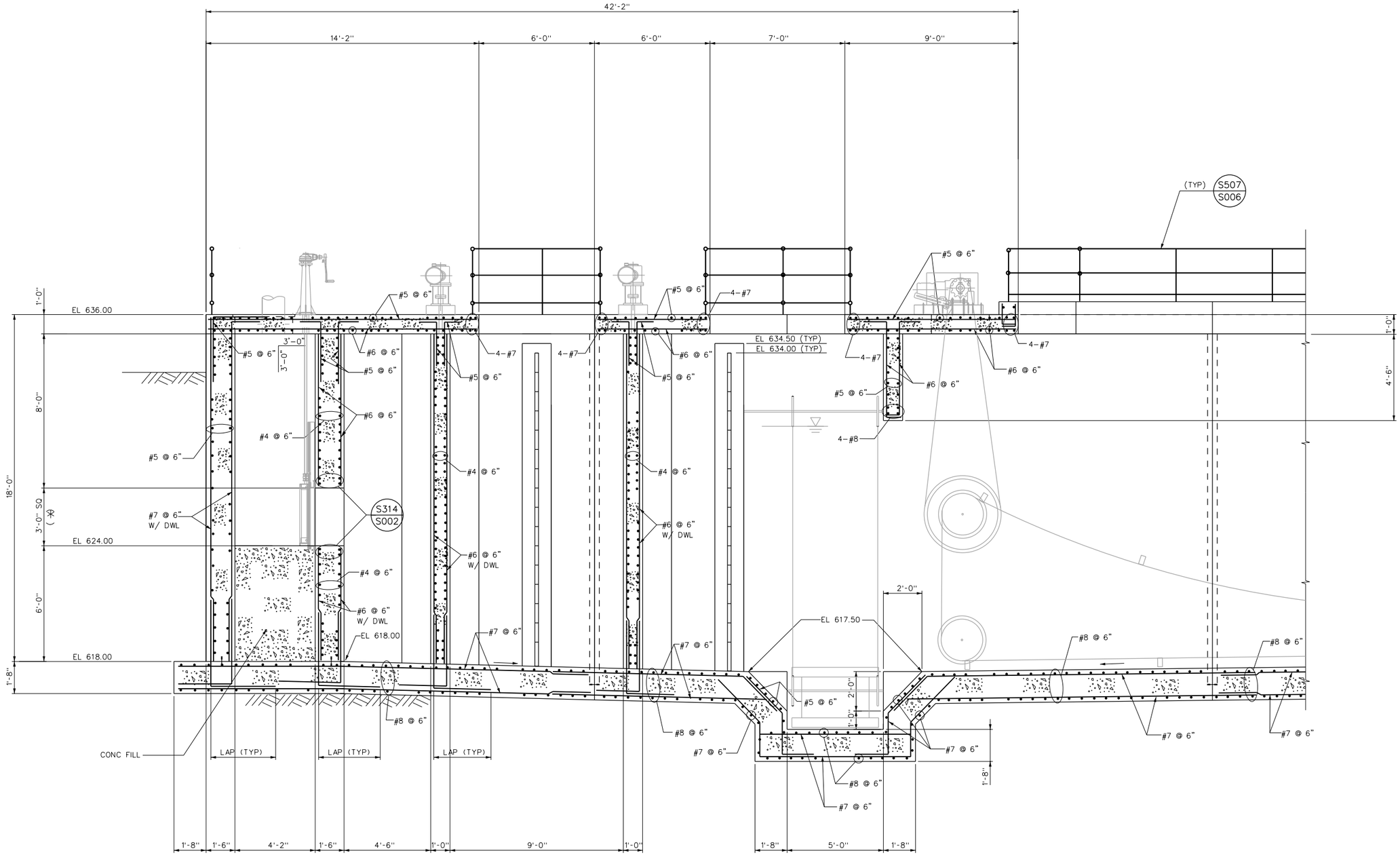

NOTE :

(*) COORDINATE ALL OPENINGS SIZES AND LOCATIONS WITH MECH DRAWINGS (TYP).

DETAIL 9 / S205
SCALE: 3/8" = 1'-0"

No.	DATE	REVISIONS	APPROVED

DESIGNED: OAA
DRAWN: GMT
CHECKED: OAA

RBF CONSULTING

carollo

IRVINE RANCH WATER DISTRICT

M. OSAMA ABDEL-AAL	RCE NO. 34252	PROJECT MANAGER	DATE
JIM MEYERHOFER	RCE NO. 48451	PROJECT MANAGER	DATE
PATRICIA UEMATSU	RCE NO. 36762	PRINCIPAL ENGINEER	DATE

IRVINE RANCH WATER DISTRICT
BAKER WATER TREATMENT PLANT
PROJECT NO. 11218

FOREBAY DETAIL - 9

DRAWING S215

SHEET 212 OF 632

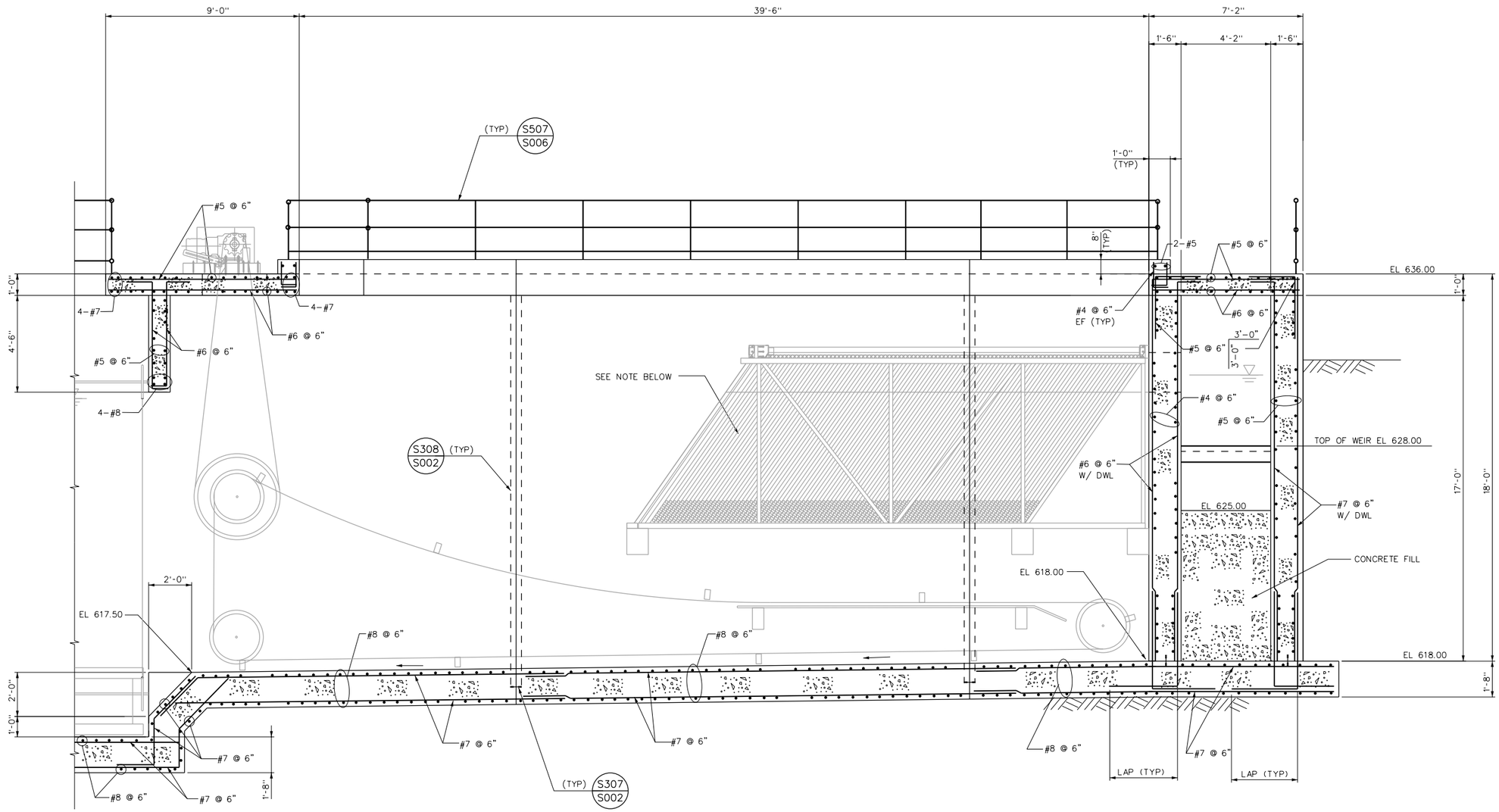

NOTE :

FOR PLATESETTLERS AND CHAIN AND FLIGHTS SUPPORTS DESIGN AND DETAILS, SEE MFR'S SHOP DRAWINGS (TYP).

DETAIL 10 / S205
SCALE: 3/8" = 1'-0"

No.	DATE	REVISIONS	APPROVED

DESIGNED: OAA
DRAWN: GMT
CHECKED: OAA

RBF CONSULTING

carollo

IRVINE RANCH WATER DISTRICT

M. OSAMA ABDEL-AAL RCE NO. 34252 PROJECT MANAGER DATE
JIM MEYERHOFER RCE NO. 48451 PROJECT MANAGER DATE
PATRICIA UEMATSU RCE NO. 36762 PRINCIPAL ENGINEER DATE

IRVINE RANCH WATER DISTRICT
BAKER WATER TREATMENT PLANT
PROJECT NO. 11218

FOREBAY DETAIL - 10

DRAWING **S216**
SHEET **213** OF 632

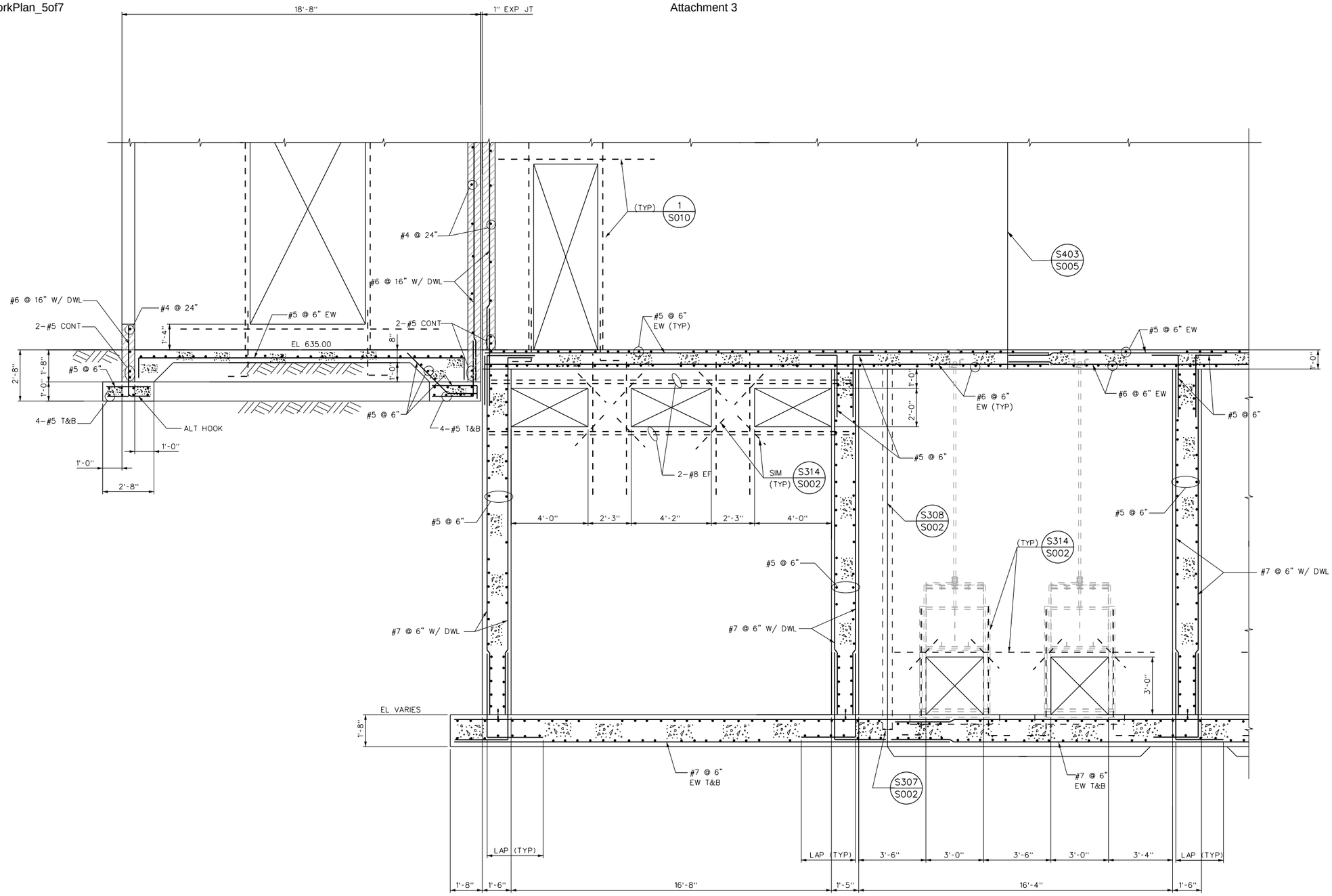

DETAIL 11 S205
SCALE: 3/8" = 1'-0"

No.	DATE	REVISIONS	APPROVED

DESIGNED: OAA
DRAWN: GMT
CHECKED: OAA

RBF CONSULTING

carollo

IRVINE RANCH WATER DISTRICT

M. OSAMA ABDEL-AAL RCE NO. 34252 PROJECT MANAGER DATE
JIM MEYERHOFER RCE NO. 48451 PROJECT MANAGER DATE
PATRICIA UEMATSU RCE NO. 36762 PRINCIPAL ENGINEER DATE

IRVINE RANCH WATER DISTRICT
BAKER WATER TREATMENT PLANT
PROJECT NO. 11218

FOREBAY DETAIL - 11

DRAWING **S217**

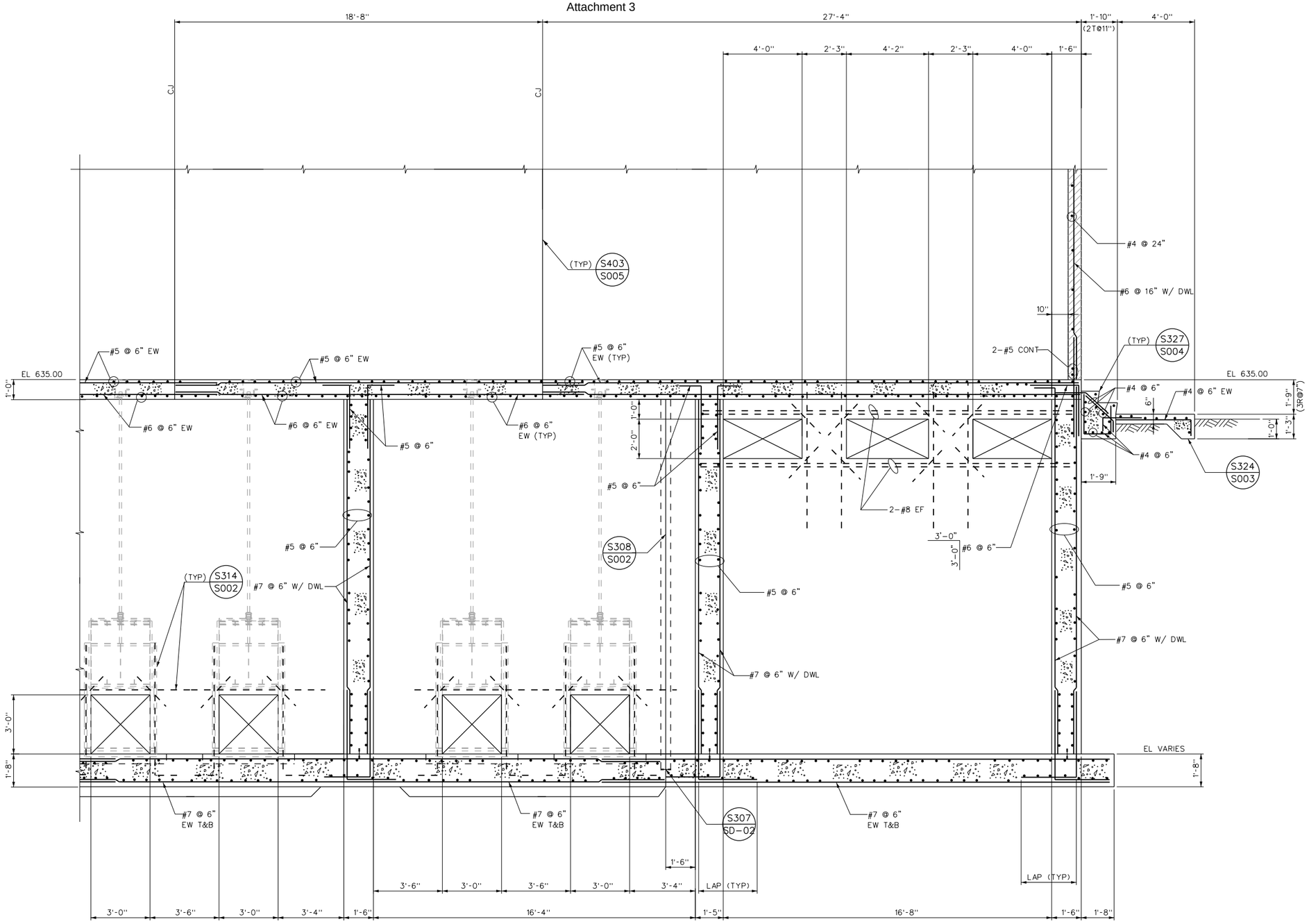

DETAIL 12 / S205

SCALE: 3/8" = 1'-0"

No.	DATE	REVISIONS	APPROVED

DESIGNED: OAA

DRAWN: GMT

CHECKED: OAA

RBF CONSULTING

carollo

IRVINE RANCH WATER DISTRICT

M. OSAMA ABDEL-AAL	RCE NO. 34252	PROJECT MANAGER	DATE
JIM MEYERHOFER	RCE NO. 48451	PROJECT MANAGER	DATE
PATRICIA UEMATSU	RCE NO. 36762	PRINCIPAL ENGINEER	DATE

IRVINE RANCH WATER DISTRICT
BAKER WATER TREATMENT PLANT
PROJECT NO. 11218

FOREBAY DETAIL - 12

DRAWING **S218**

SHEET **215** OF 632

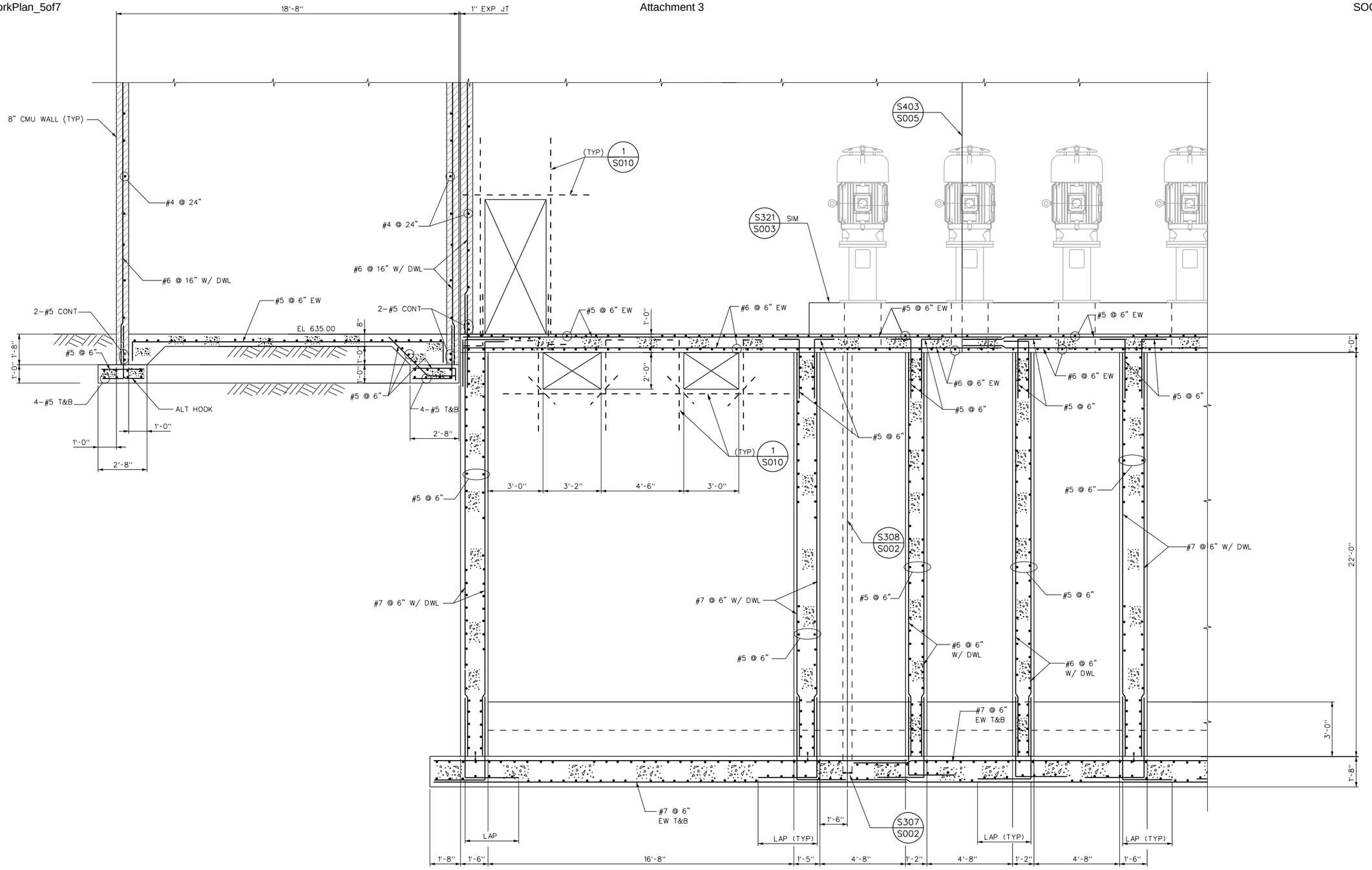

DETAIL 13 S206
SCALE: 3/8" = 1'-0"

No.	DATE	REVISIONS	APPROVED

DESIGNED: OAA
DRAWN: GMT
CHECKED: OAA

RBF CONSULTING

carollo

IRVINE RANCH WATER DISTRICT

M. OSAMA ABDEL-AAL RCE NO. 34252 PROJECT MANAGER DATE
JIM MEYERHOFER RCE NO. 48451 PROJECT MANAGER DATE
PATRICIA UEMATSU RCE NO. 36762 PRINCIPAL ENGINEER DATE

IRVINE RANCH WATER DISTRICT
BAKER WATER TREATMENT PLANT
PROJECT NO. 11218

FOREBAY DETAIL - 13

DRAWING **S219**
SHEET **216** OF 632

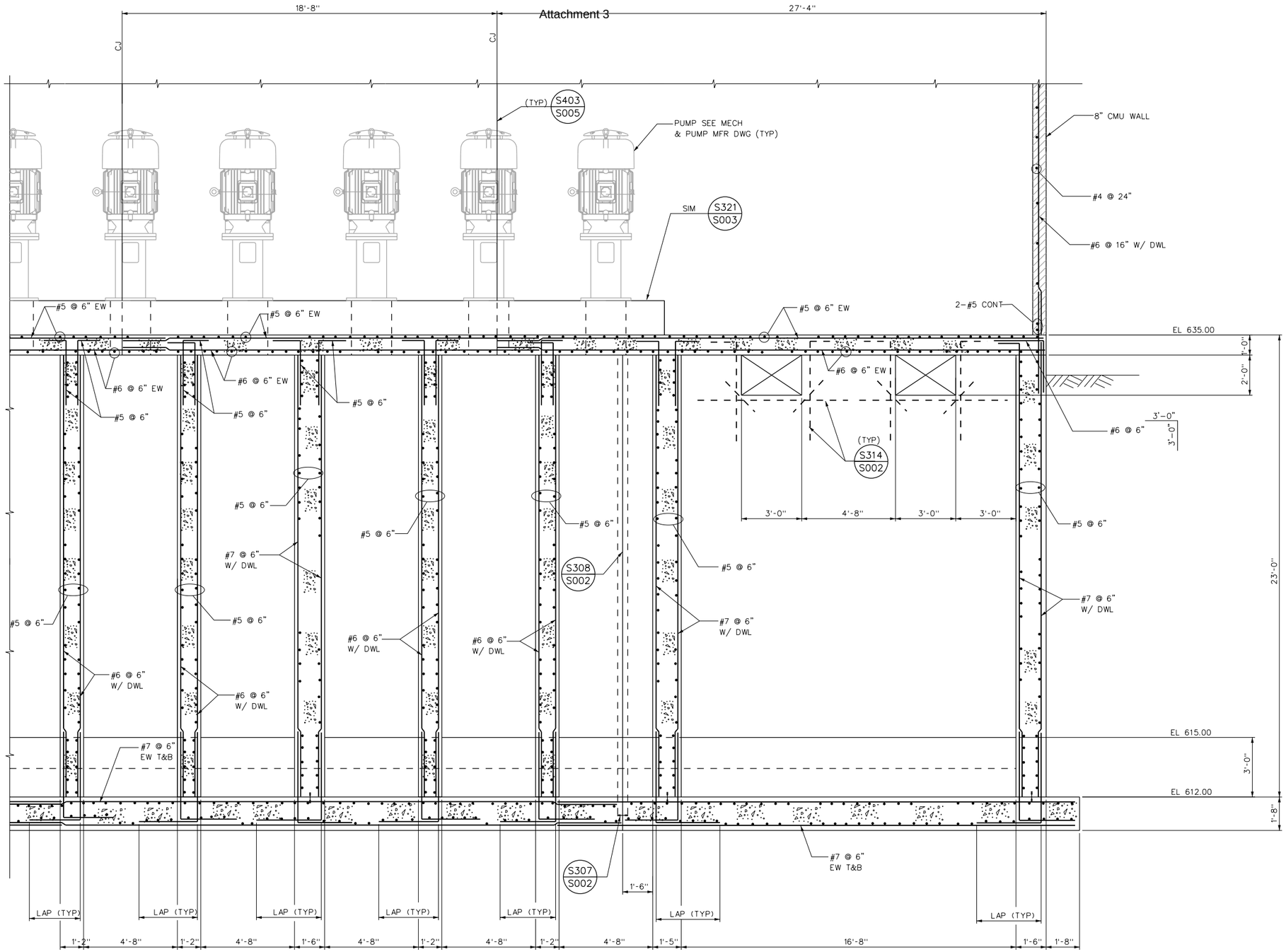

DETAIL 14 / S206
SCALE: 3/8" = 1'-0"

No.	DATE	REVISIONS	APPROVED

DESIGNED: OAA
DRAWN: GMT
CHECKED: OAA

RBF CONSULTING
carollo
IRVINE RANCH WATER DISTRICT

M. OSAMA ABDEL-AAL	RCE NO. 34252	PROJECT MANAGER	DATE
JIM MEYERHOFER	RCE NO. 48451	PROJECT MANAGER	DATE
PATRICIA UEMATSU	RCE NO. 36762	PRINCIPAL ENGINEER	DATE

IRVINE RANCH WATER DISTRICT
BAKER WATER TREATMENT PLANT
PROJECT NO. 11218

FOREBAY DETAIL - 14

DRAWING **S220**
SHEET **217** OF 632

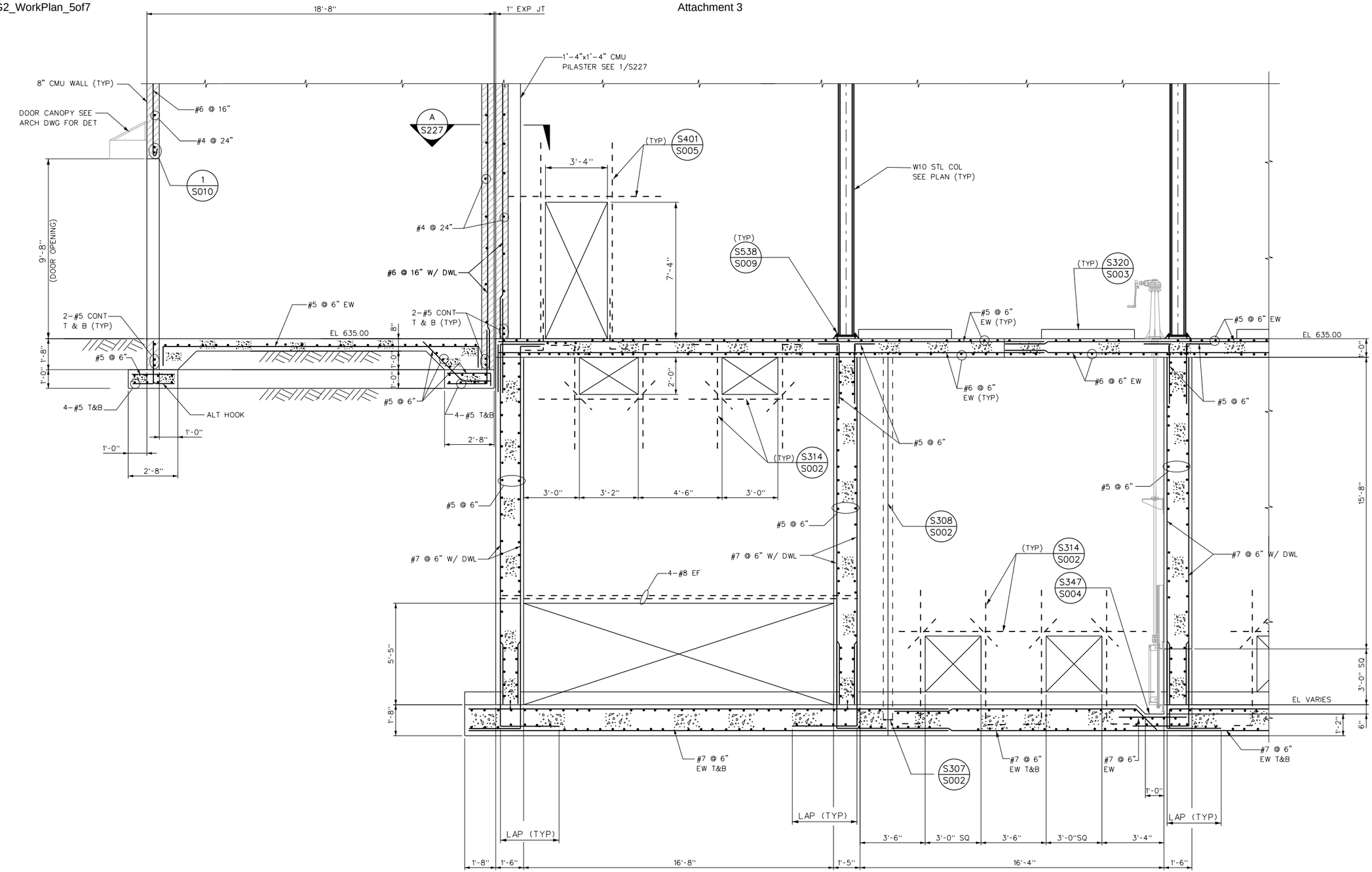

DETAIL 15 / S206
SCALE: 3/8" = 1'-0"

No.	DATE	REVISIONS	APPROVED

DESIGNED: OAA
DRAWN: GMT
CHECKED: OAA

RBF CONSULTING

carollo

IRVINE RANCH WATER DISTRICT

M. OSAMA ABDEL-AAL	RCE NO. 34252	PROJECT MANAGER	DATE
JIM MEYERHOFER	RCE NO. 48451	PROJECT MANAGER	DATE
PATRICIA UEMATSU	RCE NO. 36762	PRINCIPAL ENGINEER	DATE

IRVINE RANCH WATER DISTRICT
BAKER WATER TREATMENT PLANT
PROJECT NO. 11218

FOREBAY DETAIL - 15

DRAWING **S221**

SHEET **218** OF 632

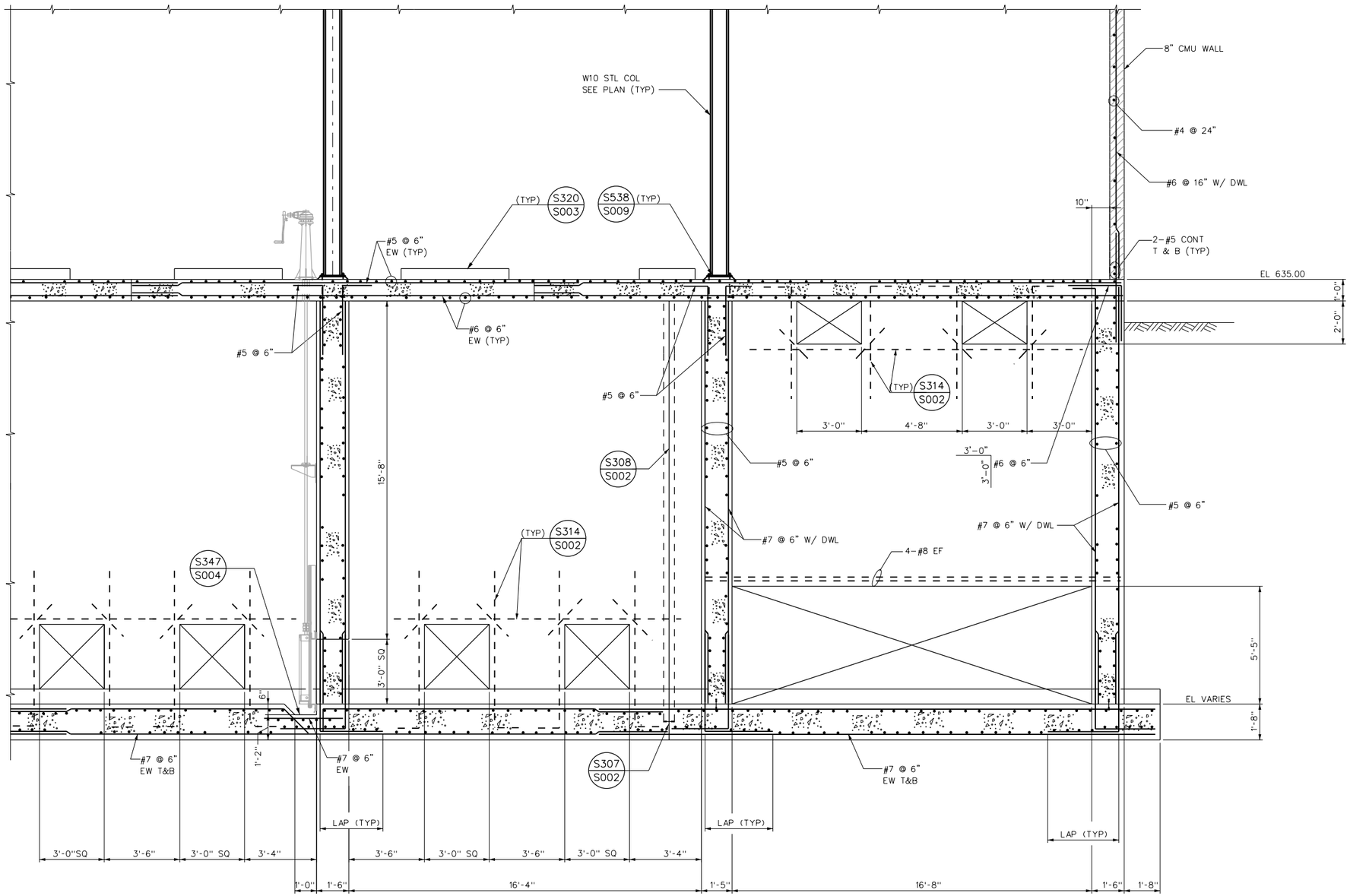

DETAIL 16 / S206
SCALE: 3/8" = 1'-0"

No.	DATE	REVISIONS	APPROVED

DESIGNED: OAA
DRAWN: GMT
CHECKED: OAA

RBF CONSULTING

carollo

IRVINE RANCH WATER DISTRICT

M. OSAMA ABDEL-AAL	RCE NO. 34252	PROJECT MANAGER	DATE
JIM MEYERHOFER	RCE NO. 48451	PROJECT MANAGER	DATE
PATRICIA UEMATSU	RCE NO. 36762	PRINCIPAL ENGINEER	DATE

IRVINE RANCH WATER DISTRICT
BAKER WATER TREATMENT PLANT
PROJECT NO. 11218

FOREBAY DETAIL - 16

DRAWING **S222**

SHEET 219 OF 632

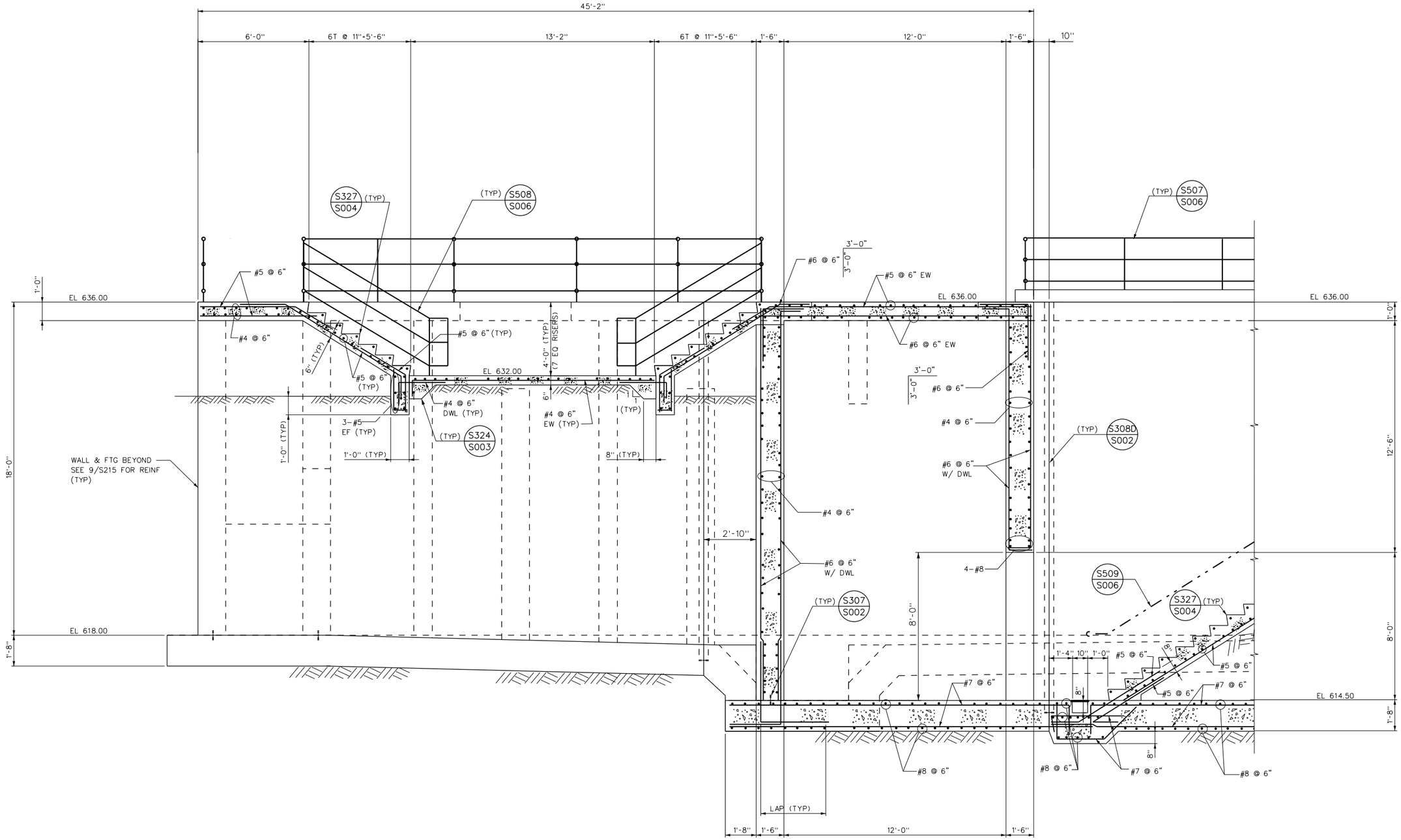

DETAIL 17 / S206
SCALE: 3/8" = 1'-0"

No.	DATE	REVISIONS	APPROVED

DESIGNED: OAA
DRAWN: GMT
CHECKED: OAA

RBF CONSULTING

carollo

IRVINE RANCH WATER DISTRICT

M. OSAMA ABDEL-AAL RCE NO. 34252 PROJECT MANAGER DATE
JIM MEYERHOFER RCE NO. 48451 PROJECT MANAGER DATE
PATRICIA UEMATSU RCE NO. 36762 PRINCIPAL ENGINEER DATE

IRVINE RANCH WATER DISTRICT
BAKER WATER TREATMENT PLANT
PROJECT NO. 11218

FOREBAY DETAIL - 17

DRAWING **S223**
SHEET 220 OF 632

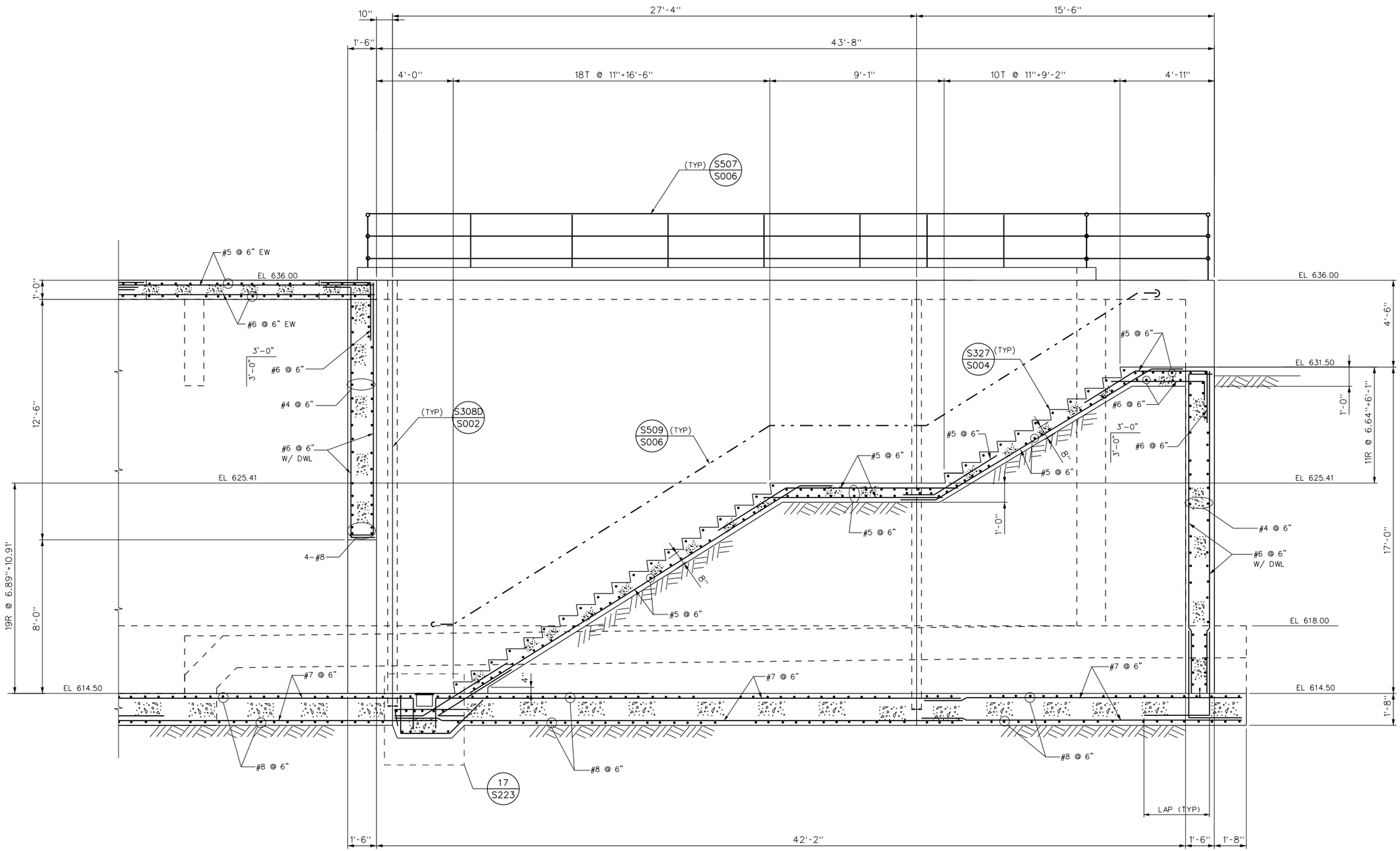

DETAIL 18 S206
SCALE: 3/8" = 1'-0"

No.	DATE	REVISIONS	APPROVED

DESIGNED: OAA
DRAWN: GMT
CHECKED: OAA

RBF CONSULTING

carollo

IRVINE RANCH WATER DISTRICT

M. OSAMA ABDEL-AAL	RCE NO. 34252	PROJECT MANAGER	DATE
JIM MEYERHOFER	RCE NO. 48451	PROJECT MANAGER	DATE
PATRICIA UEMATSU	RCE NO. 36762	PRINCIPAL ENGINEER	DATE

IRVINE RANCH WATER DISTRICT
BAKER WATER TREATMENT PLANT
PROJECT NO. 11218

FOREBAY DETAIL - 18

DRAWING **S224**

SHEET 221 OF 632

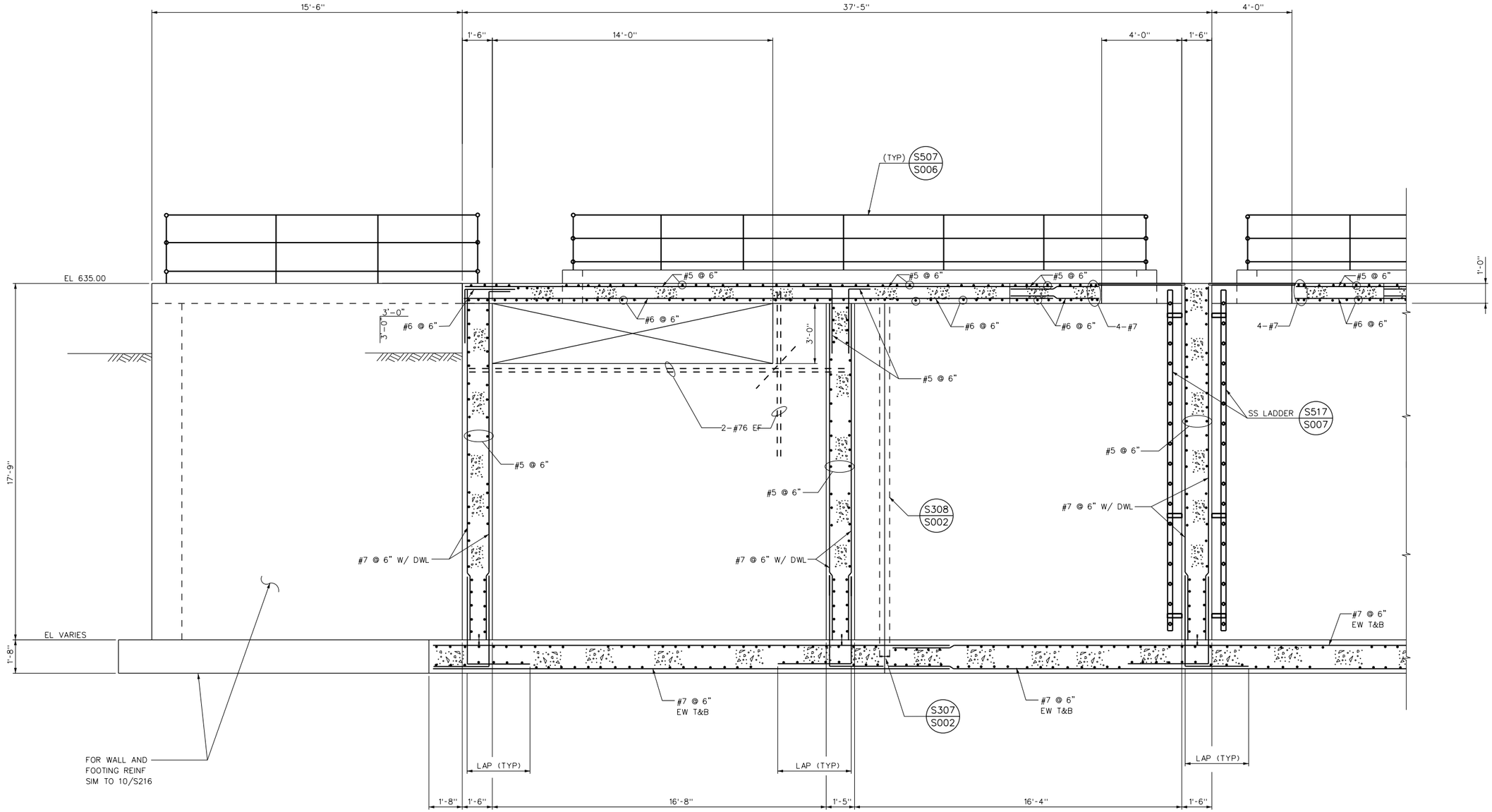

DETAIL 19 S206
SCALE: 3/8" = 1'-0"

No.	DATE	REVISIONS	APPROVED

DESIGNED: OAA
DRAWN: GMT
CHECKED: OAA

RBF CONSULTING

carollo

IRVINE RANCH WATER DISTRICT

M. OSAMA ABDEL-AAL	RCE NO. 34252	PROJECT MANAGER	DATE
JIM MEYERHOFER	RCE NO. 48451	PROJECT MANAGER	DATE
PATRICIA UEMATSU	RCE NO. 36762	PRINCIPAL ENGINEER	DATE

IRVINE RANCH WATER DISTRICT
BAKER WATER TREATMENT PLANT
PROJECT NO. 11218

FOREBAY DETAIL - 19

DRAWING **S225**
SHEET **222** OF 632

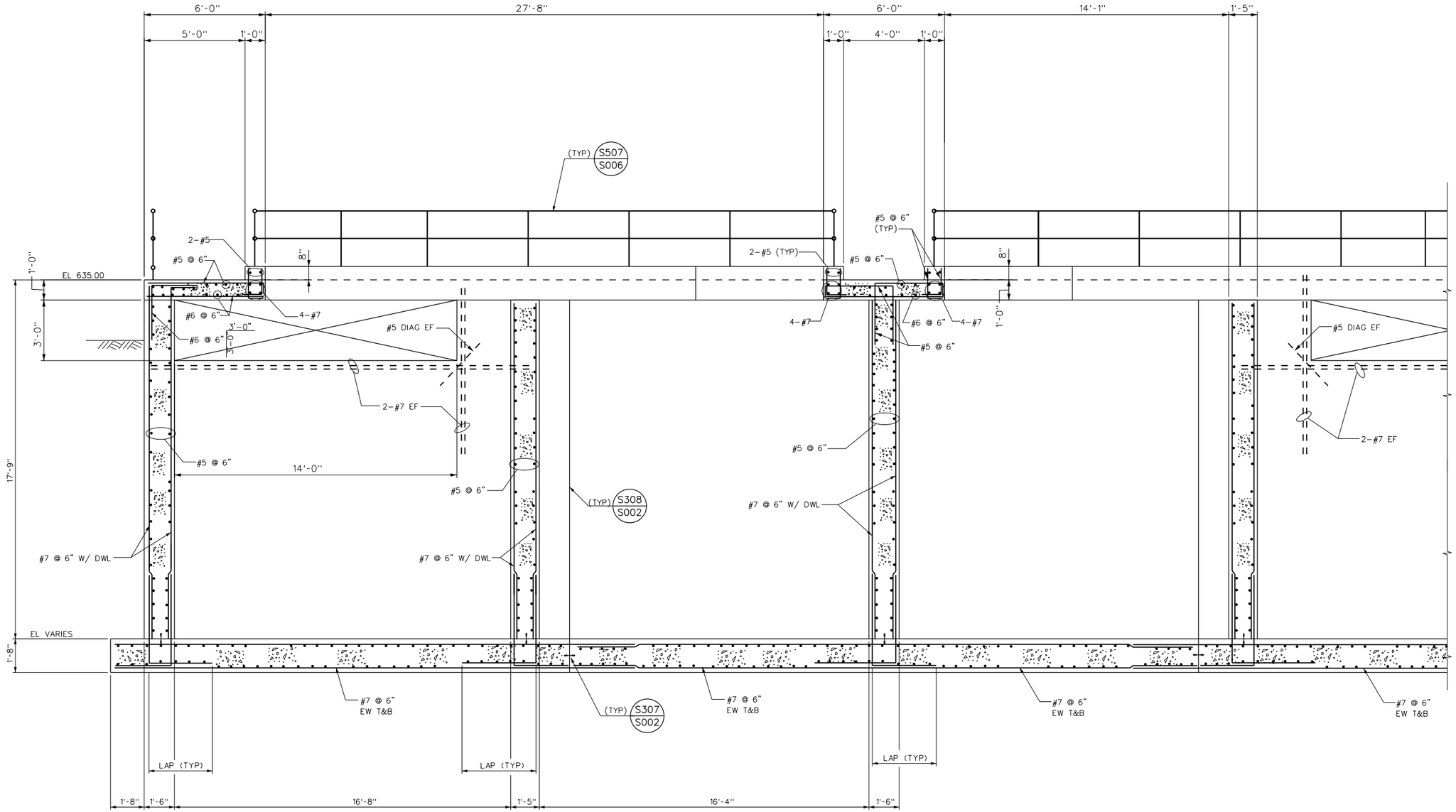

SECTION J S201 / S202
SCALE: 3/8" = 1'-0"

No.	DATE	REVISIONS	APPROVED

DESIGNED: OAA
DRAWN: GMT
CHECKED: OAA

RBF CONSULTING

carollo

IRVINE RANCH WATER DISTRICT

M. OSAMA ABDEL-AAL RCE NO. 34252 PROJECT MANAGER DATE
JIM MEYERHOFER RCE NO. 48451 PROJECT MANAGER DATE
PATRICIA UEMATSU RCE NO. 36762 PRINCIPAL ENGINEER DATE

IRVINE RANCH WATER DISTRICT
BAKER WATER TREATMENT PLANT
PROJECT NO. 11218

FOREBAY
SECTION - J

DRAWING S226
SHEET 223 OF 632

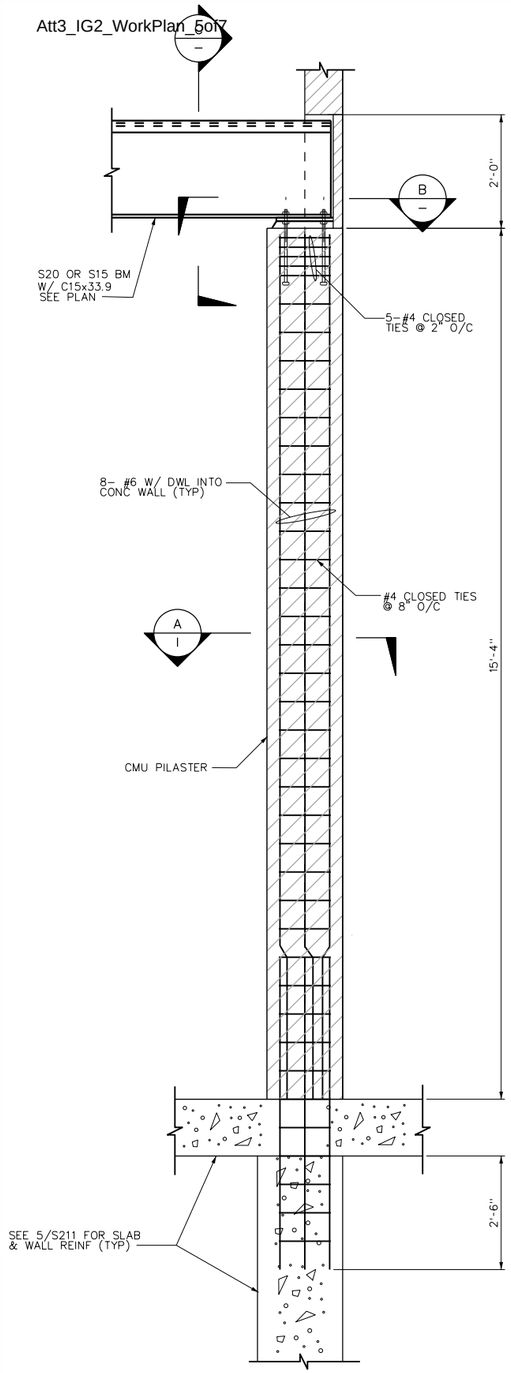

DETAIL 1 VAR
SCALE: ¾"=1'-0"

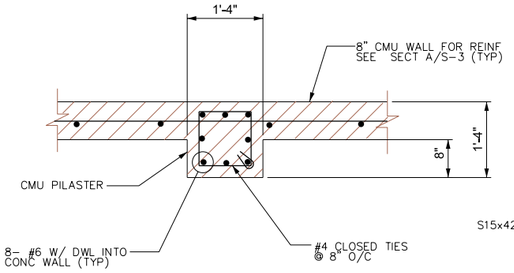

SECTION A –
SCALE: NO SCALE

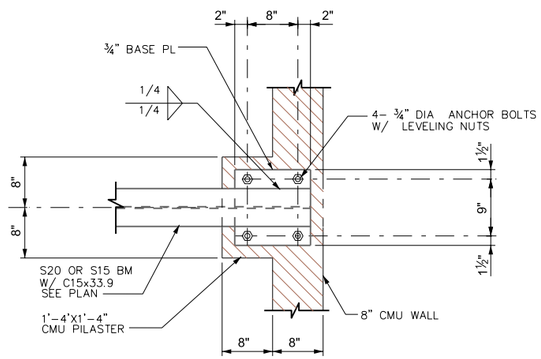

SECTION B –
SCALE: NO SCALE

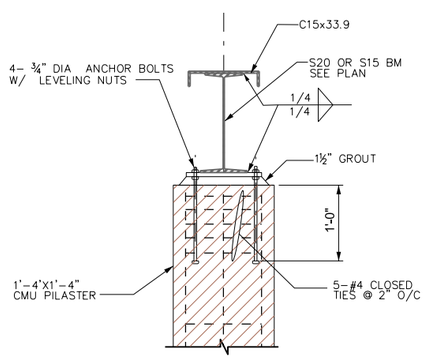

SECTION C –
SCALE: NO SCALE

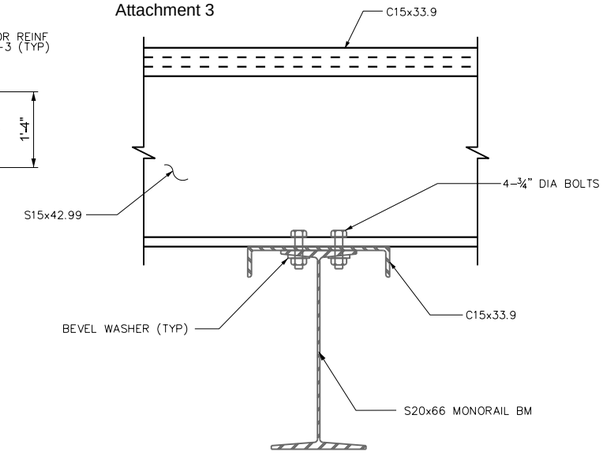

DETAIL 2 VAR
SCALE: 1½"= 1'-0"

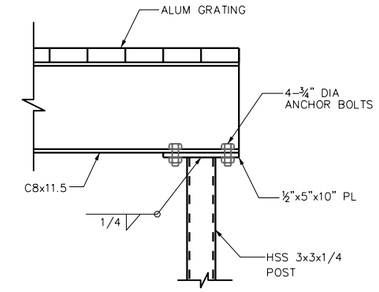

DETAIL 3 VAR
SCALE: 1½"= 1'-0"

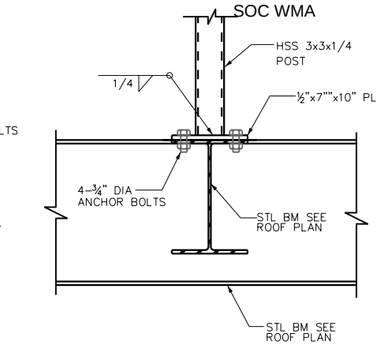

DETAIL 4 VAR
SCALE: 1½"= 1'-0"

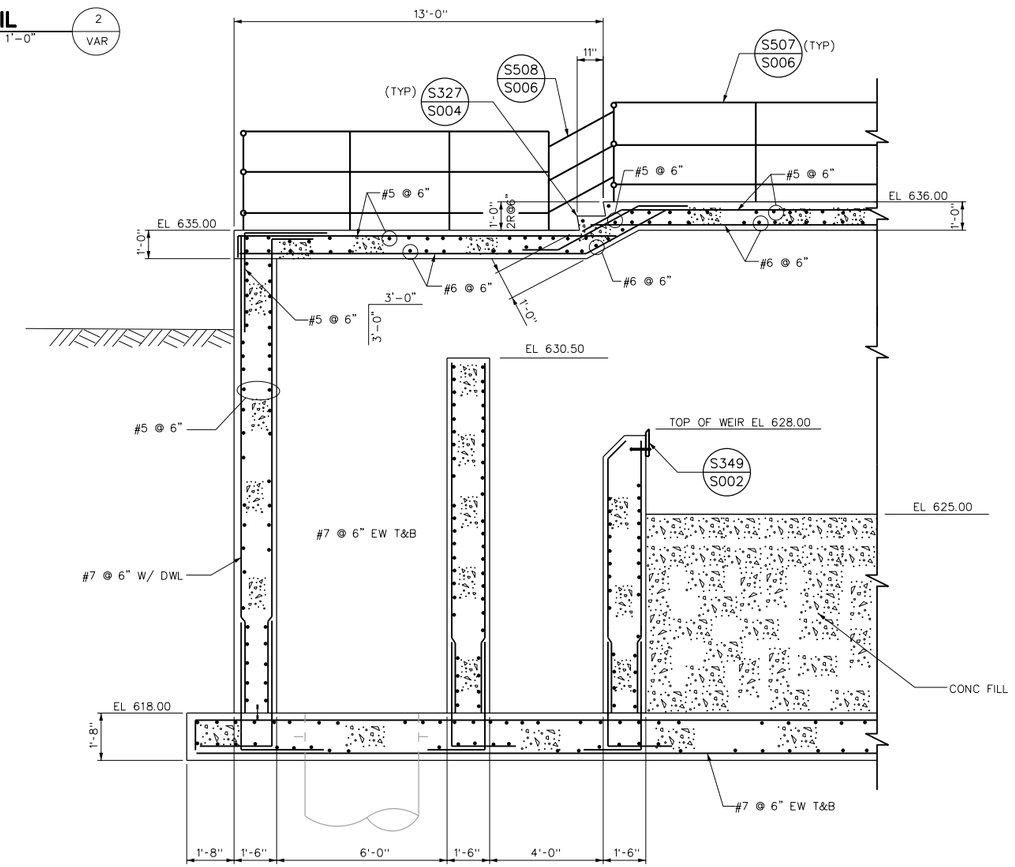

SECTION D
SCALE: NO SCALE
S201 ,202

No.	DATE	REVISIONS	APPROVED

DESIGNED: OAA
DRAWN: GMT
CHECKED: OAA

RBF CONSULTING

carollo

IRVINE RANCH WATER DISTRICT

M. OSAMA ABDEL-AAL	RCE NO. 34252	PROJECT MANAGER	DATE
JIM MEYERHOFER	RCE NO. 48451	PROJECT MANAGER	DATE
PATRICIA UEMATSU	RCE NO. 36762	PRINCIPAL ENGINEER	DATE

IRVINE RANCH WATER DISTRICT
BAKER WATER TREATMENT PLANT
PROJECT NO. 11218

FOREBAY MISCELLANEOUS DETAILS

DRAWING
S227
SHEET
224 OF 632

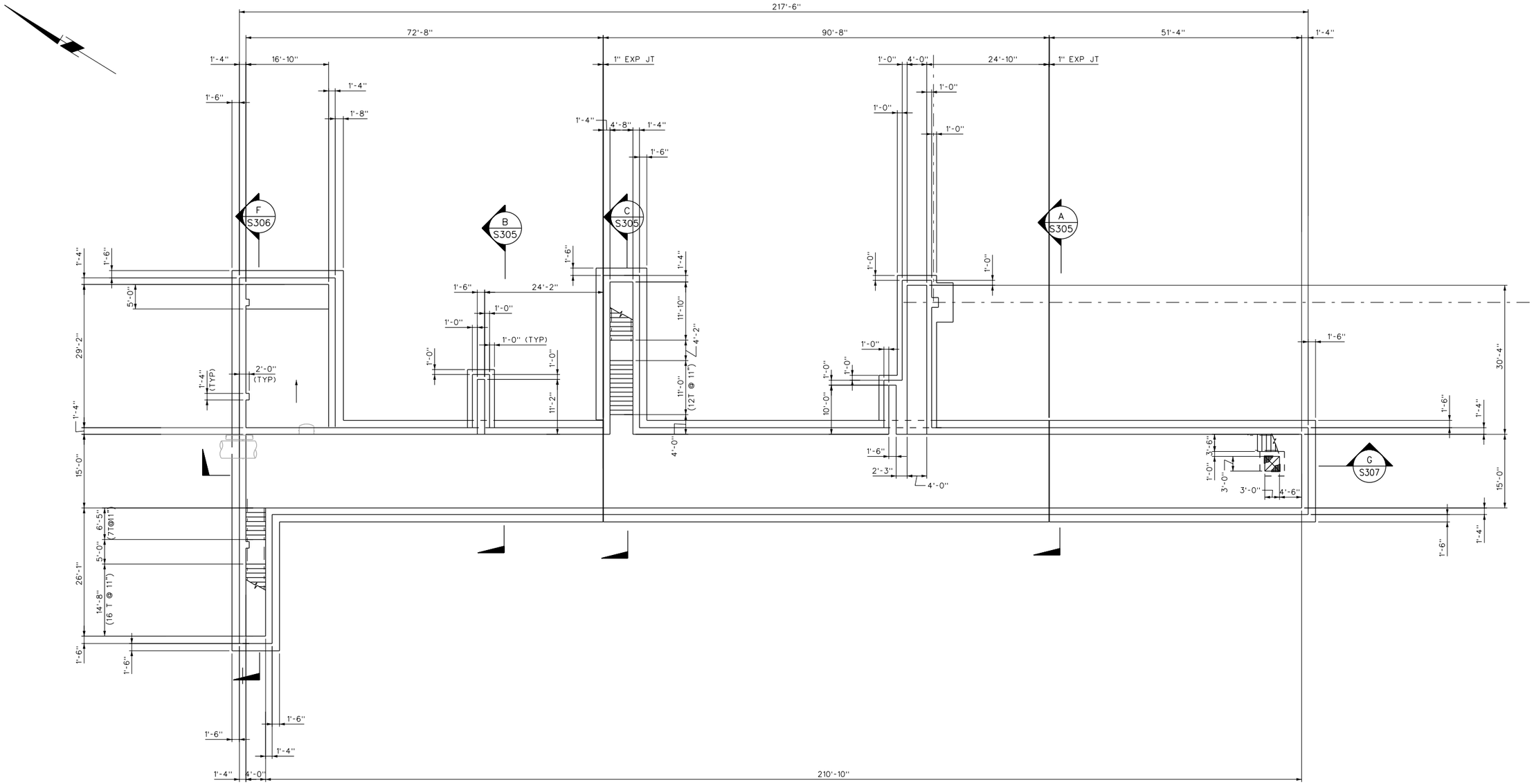

LOWER LEVEL PLAN

SCALE: 3/32" = 1'-0"

No.	DATE	REVISIONS	APPROVED

DESIGNED: OAA
DRAWN: GMT
CHECKED: OAA

RBF CONSULTING

carollo

IRVINE RANCH WATER DISTRICT

M. OSAMA ABDEL-AAL RCE NO. 34252 PROJECT MANAGER DATE
JIM MEYERHOFER RCE NO. 48451 PROJECT MANAGER DATE
PATRICIA UEMATSU RCE NO. 36762 PRINCIPAL ENGINEER DATE

IRVINE RANCH WATER DISTRICT
BAKER WATER TREATMENT PLANT
PROJECT NO. 11218

TREATMENT BUILDING
LOWER LEVEL PLAN
AT EL 614.50

DRAWING S301

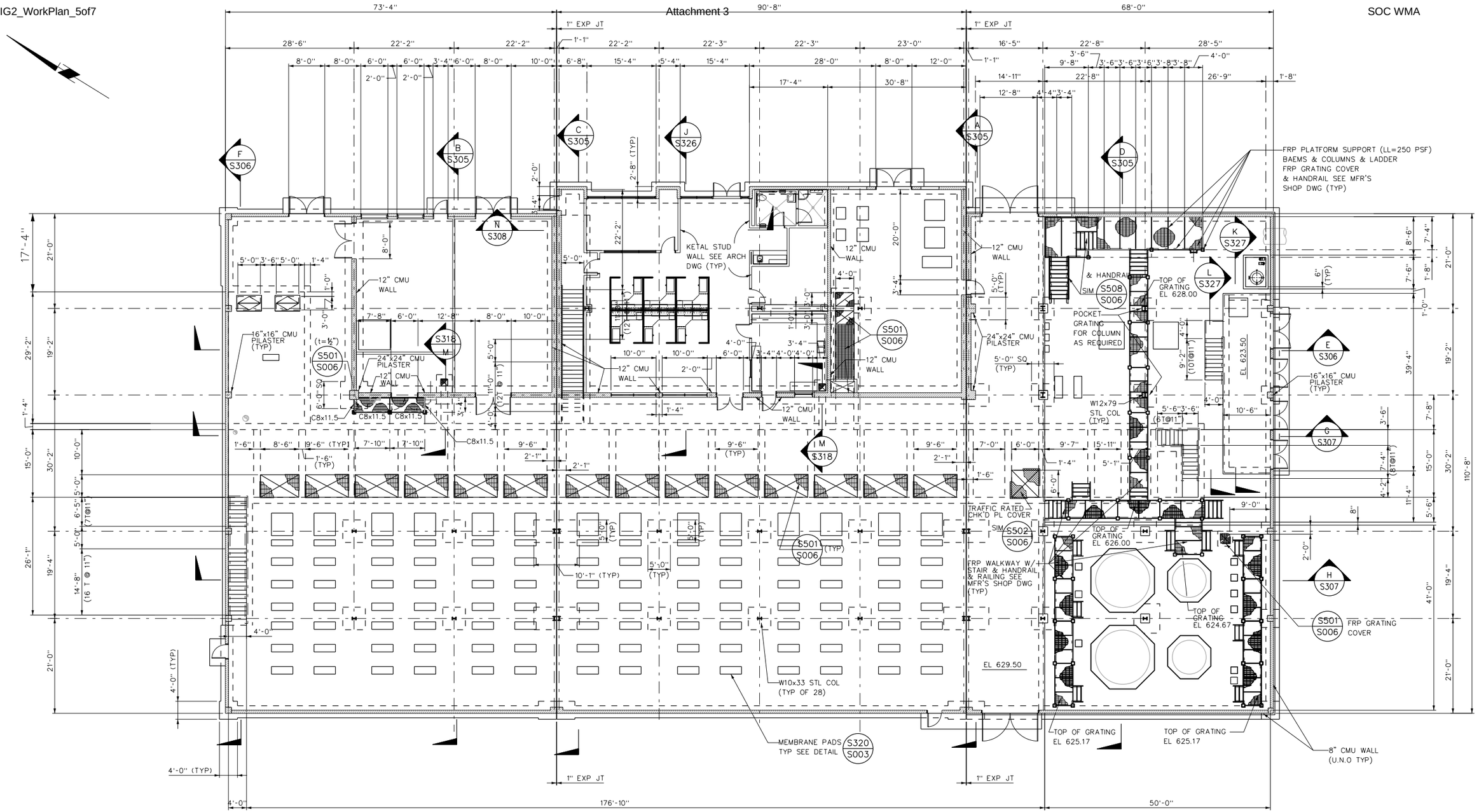

FOUNDATION & FLOOR PLAN

SCALE: 3/32" = 1'-0"

NOTES:

1. COORDINATE WITH MECH DWGS FOR EQUIPMENT PAD LOCATIONS AND SIZES.
2. COORDINATE WITH HVAC DWGS FOR EQUIPMENT AND LOVER LOCATIONS AND SIZES.
3. COORDINATE WITH ARCH DWGS FOR DOOR, WINDOW OPENING SIZES, DIMENSIONS AND STUD WALL LOCATIONS.
4. FRP GRATING WELDS ARE APPROXIMATE. GRATING MANUFACTURE TO COORDINATE AWS SPECIFICATION 06611.

No.	DATE	REVISIONS	APPROVED

DESIGNED: OAA
DRAWN: GMT
CHECKED: OAA

RBF CONSULTING

carollo

IRVINE RANCH WATER DISTRICT

M. OSAMA ABDEL-AAL RCE NO. 34252 PROJECT MANAGER DATE
JIM MEYERHOFER RCE NO. 48451 PROJECT MANAGER DATE
PATRICIA UEMATSU RCE NO. 36762 PRINCIPAL ENGINEER DATE

IRVINE RANCH WATER DISTRICT
BAKER WATER TREATMENT PLANT
PROJECT NO. 11218

TREATMENT BUILDING
FOUNDATION & FLOOR PLAN
AT EL 629.50

DRAWING S302

NOTE :

SEE ROOF NOTES PER SHEET S304

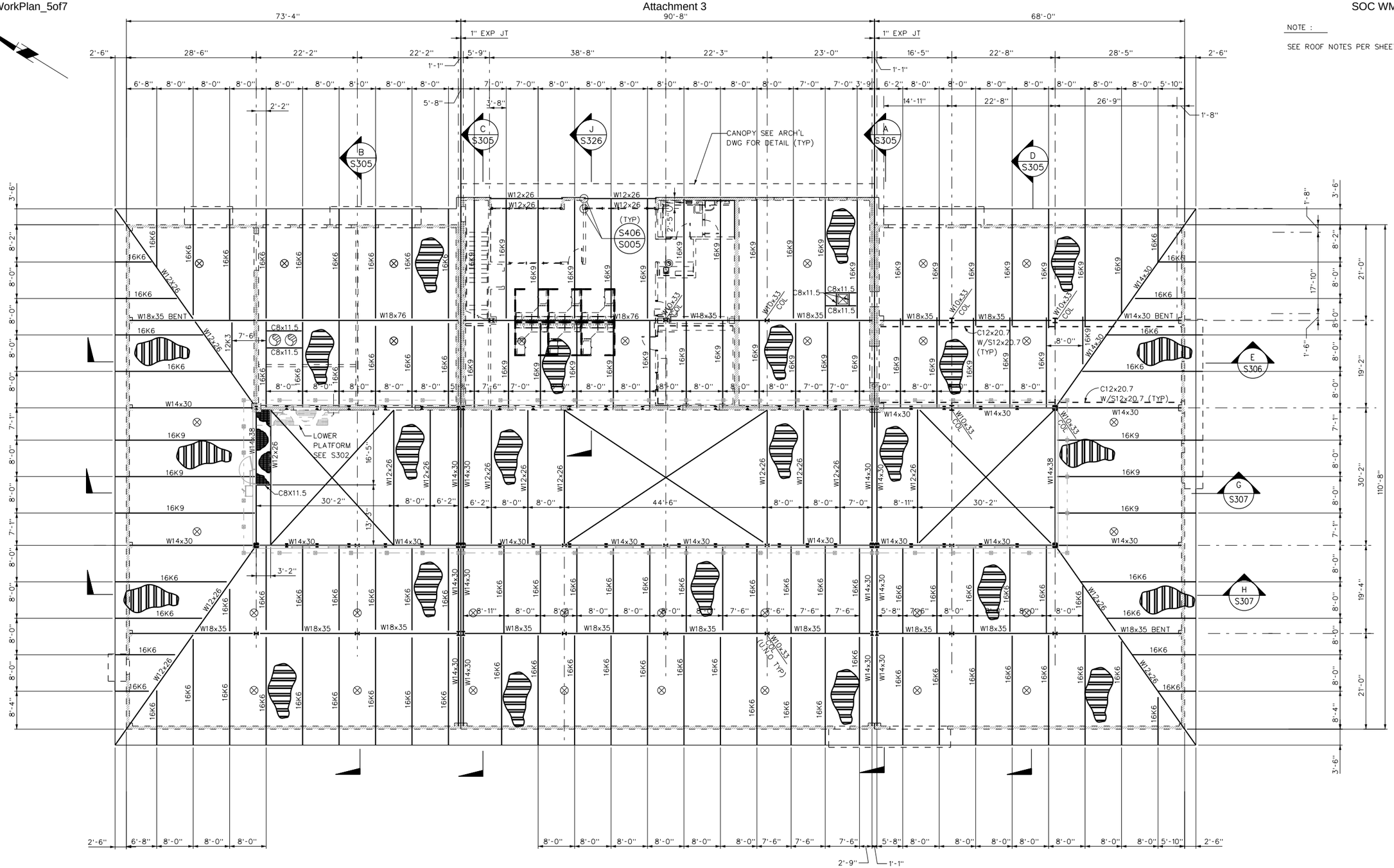

LOWER ROOF PLAN

SCALE: 3/32" = 1'-0"

No.	DATE	REVISIONS	APPROVED

DESIGNED: OAA

DRAWN: GMT

CHECKED: OAA

RBF CONSULTING

carollo

IRVINE RANCH WATER DISTRICT

M. OSAMA ABDEL-AAL RCE NO. 34252 PROJECT MANAGER DATE

JIM MEYERHOFER RCE NO. 48451 PROJECT MANAGER DATE

PATRICIA UEMATSU RCE NO. 36762 PRINCIPAL ENGINEER DATE

IRVINE RANCH WATER DISTRICT
BAKER WATER TREATMENT PLANT
PROJECT NO. 11218

TREATMENT BUILDING
LOWER ROOF PLAN

DRAWING S303

SHEET 227 OF 632

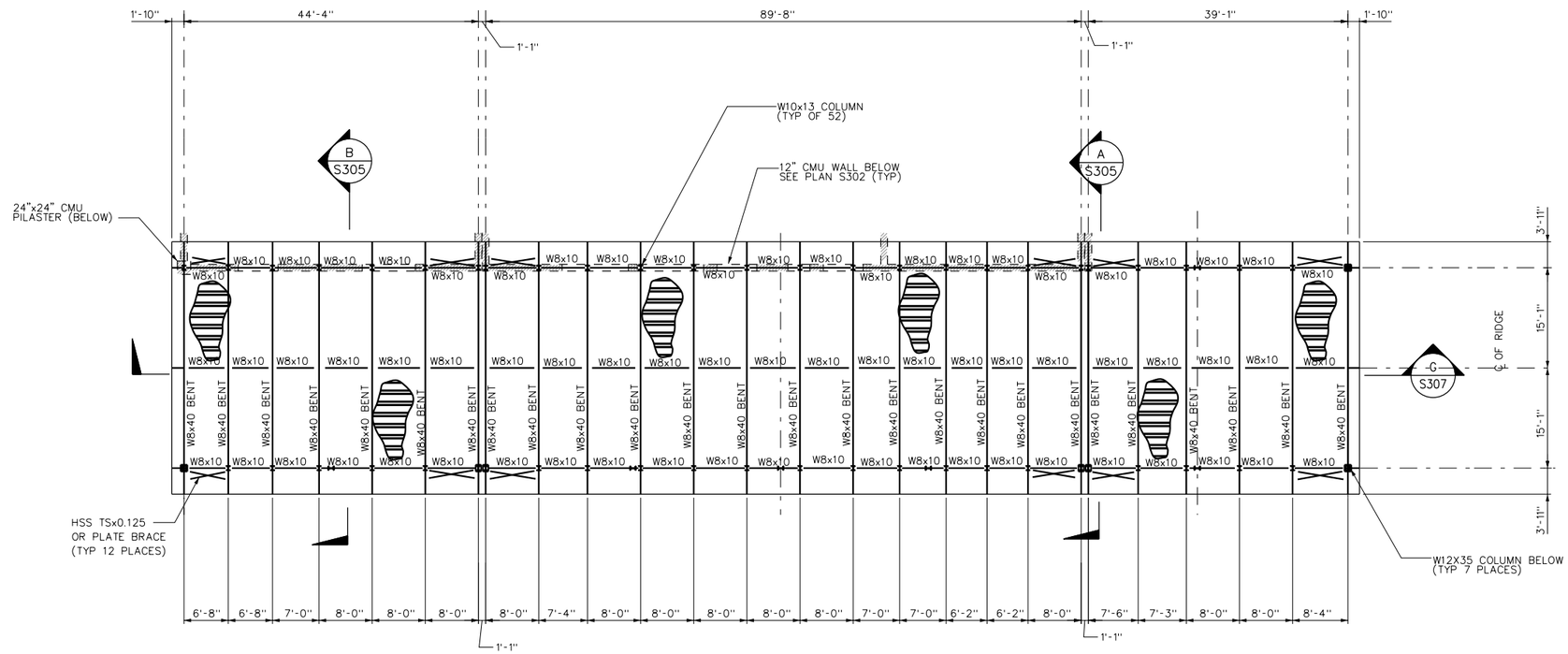

HIGHER ROOF PLAN

SCALE: 3/32" = 1'-0"

NOTES :

1. SEE SHEET S001 TO S110 FOR STRUCTURAL STANDARD DETAILS AND MISC. PLANS, SECTIONS & DETAILS.
2. ROOF METAL DECK SHALL BE 1 1/2", 18GA. GALV. STEEL DECK, TYPE B-36 BY "VERCO" OR APPROVED EQUAL.

DECK WELDING :

WELD DECK SECTIONS TO ALL SUPPORTING MEMBERS, BEARING PLATES OR SUPPORTS AT BUTT JOINTS, AT INTERMEDIATE SUPPORTS, SIDE SUPPORTS, AND AT END SUPPORTS WITH ½" EFFECTIVE DIAMETER PUDDLE WELDS SPACED AT 12 INCHES ON CENTER AT MEMBERS PARALLEL TO THE RIBS AND AT EVERY RIB VALLEY AT MEMBERS PERPENDICULAR TO THE RIBS. SIDE LAPS AND LOMGITUDINAL JOINS BETWEEN DECK SECTIONS SHALL BE WELDE WITH 1 1/2" LONG TOP SEAM WELDS, SPACED AT 12" ON CENTER.

3. PROVIDE 4-#5 CHORD REINF. CONTINUOUS AT TOP OF CMU WALLS AT ROOF LEVEL (54" LAP STAGGERED) TYP.
4. ROOF STEEL JOISTS OF TYPE "K" OR "LH" ARE BY VULCRAFT OR EQUAL.
5. ALL CANTILIVERED JOIST TOP CHORD SHALL BE DESIGNED FOR 560 LB/FT AND 1500 LBS CONCENTRATED LOAD.
6. COORDINATE ROOF PENETRATIONS WITH ARCHITECTURAL AND HVAC DRAWINGS.
7. JOIST MANFACTURER SHALL SUBMIT DESIGN CALC'S TO VERIFY JOIST CAPACITY FOR THE JOIST FOLLOWING LOADING CONDITIONS:

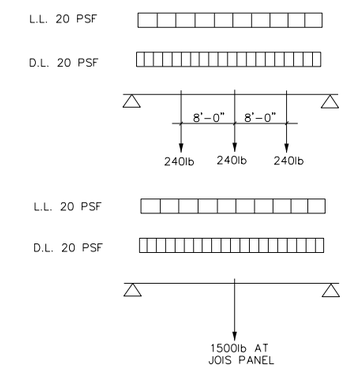

8. ALL JOISTS SHALL BE DESIGNED FOR NET UPLIFT OF 10 PSF (ASD).
9. FOR SOLAR TUBES SEE ARCHITECTURAL DRAWING FOR LOCATIONS.

No.	DATE	REVISIONS	APPROVED

DESIGNED: OAA
DRAWN: GMT
CHECKED: OAA

RBF CONSULTING

carollo

IRVINE RANCH WATER DISTRICT

M. OSAMA ABDEL-AAL RCE NO. 34252 PROJECT MANAGER DATE
JIM MEYERHOFER RCE NO. 48451 PROJECT MANAGER DATE
PATRICIA UEMATSU RCE NO. 36762 PRINCIPAL ENGINEER DATE

IRVINE RANCH WATER DISTRICT
BAKER WATER TREATMENT PLANT
PROJECT NO. 11218

TREATMENT BUILDING
HIGHER ROOF PLAN

DRAWING S304

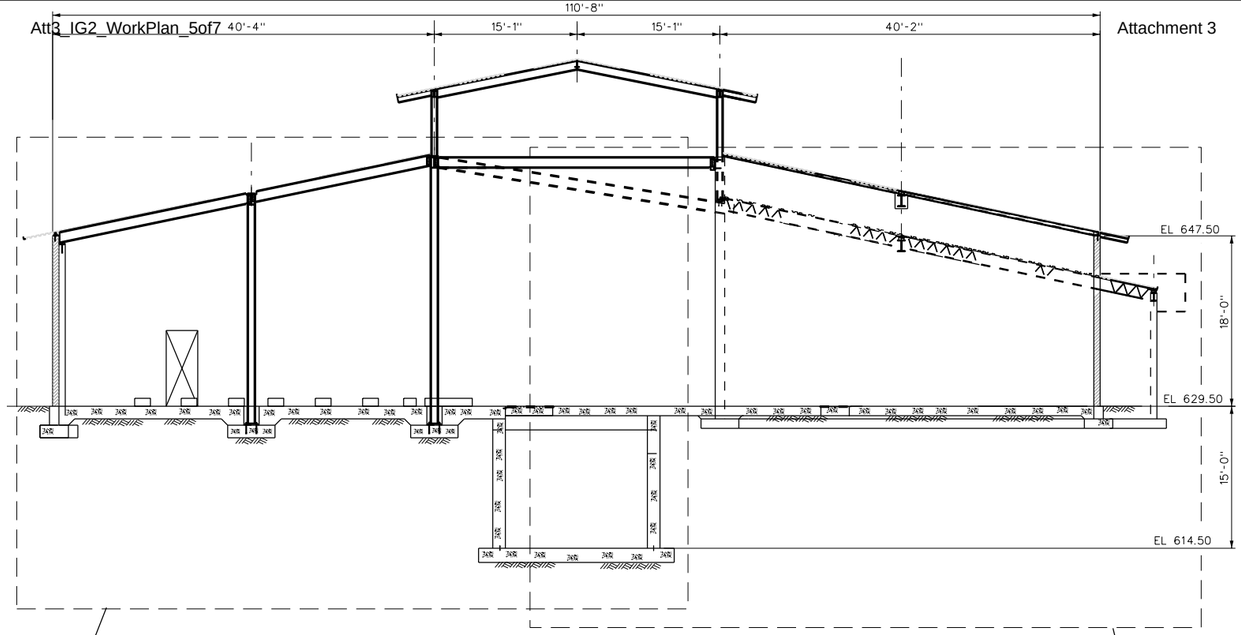

1 S308 SIM

SECTION A S301
SCALE: 1//8" = 1'-0"
S302, S303, S304

3 S310

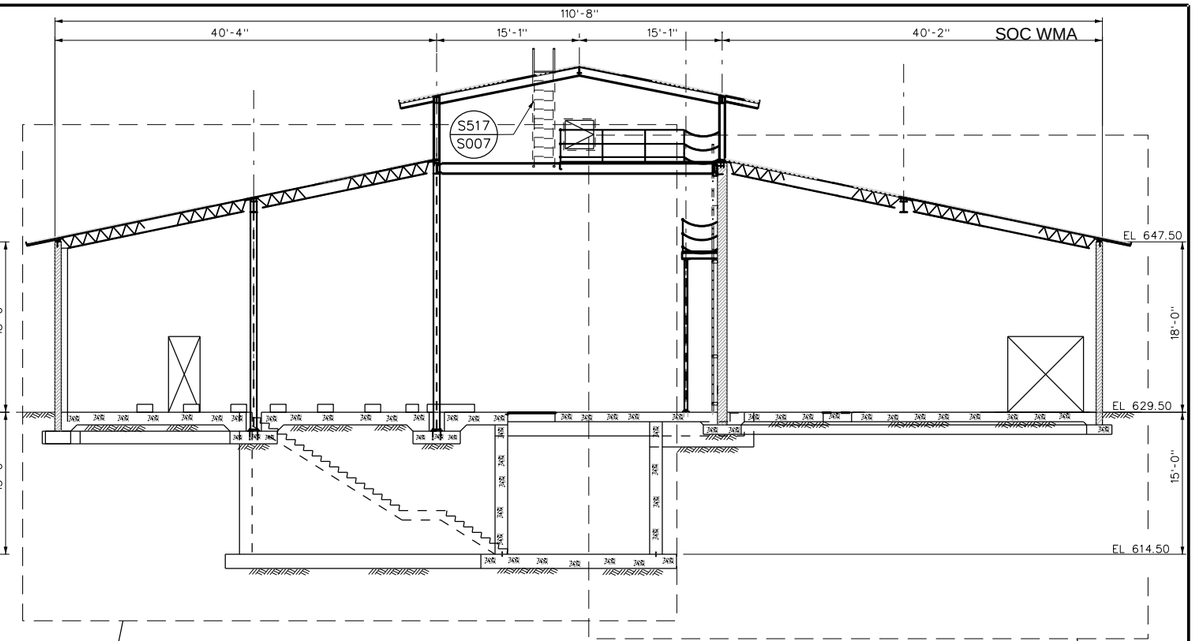

1 S308

SECTION B S301
SCALE: 1//8" = 1'-0"
S302, S303, S304

2 S309

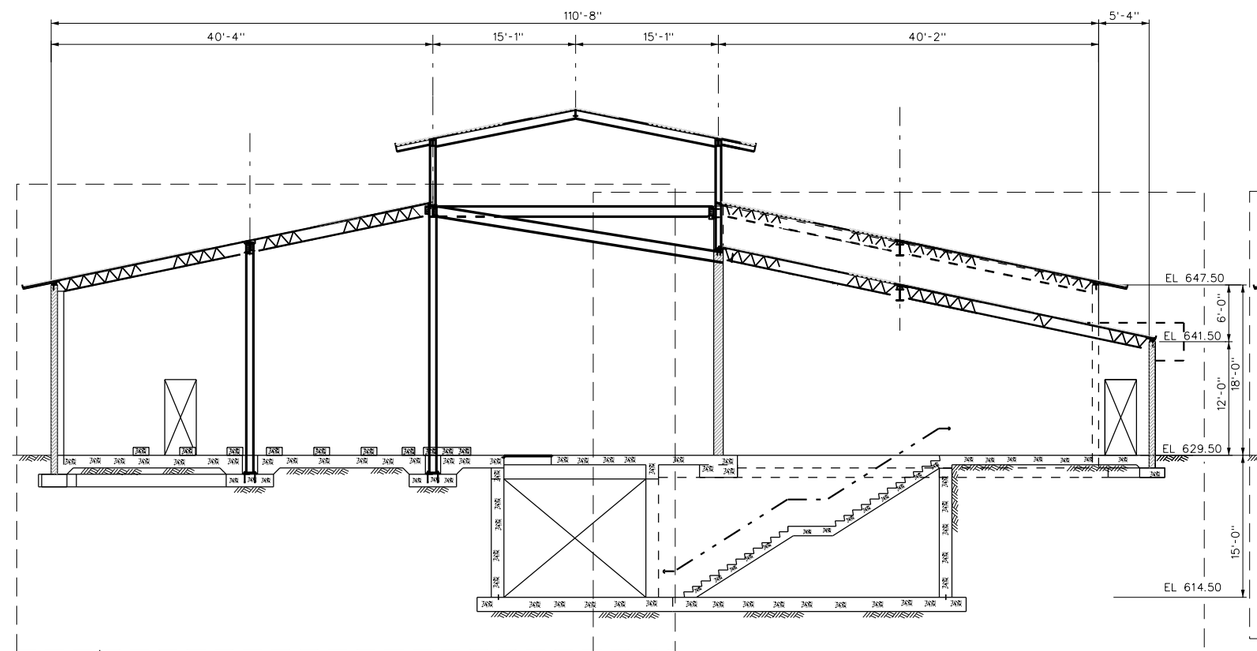

1 S308 SIM

SECTION C S301
SCALE: 1//8" = 1'-0"
S302, S303, S304

4 S311

5 S312

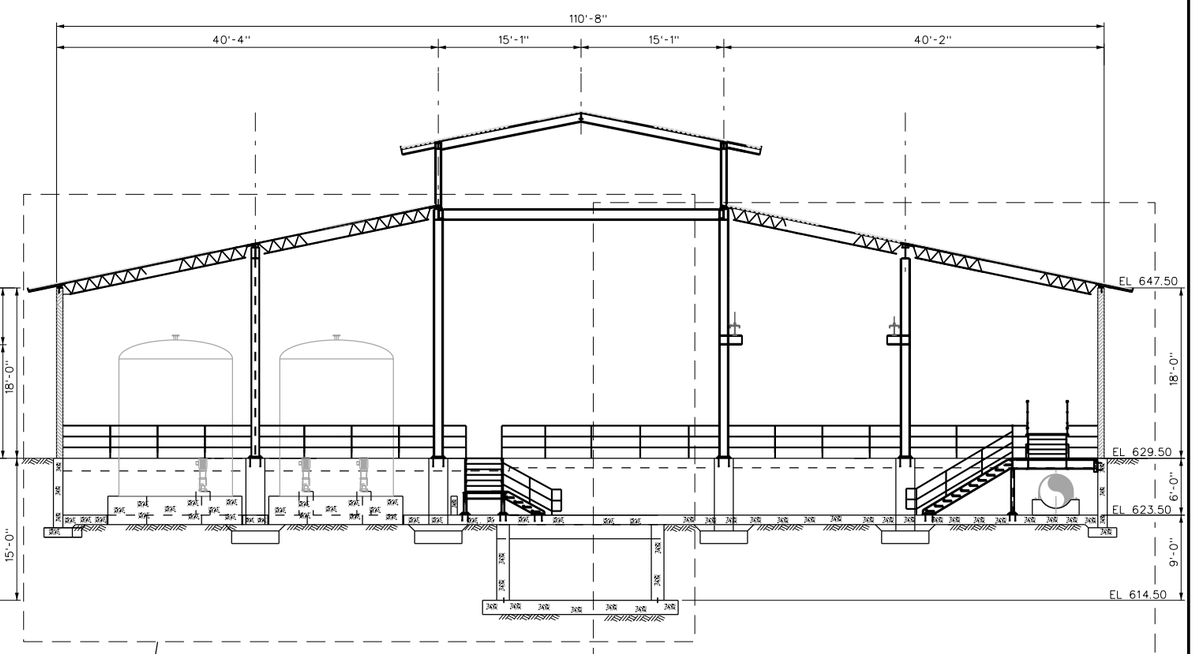

SECTION D S302
SCALE: 1//8" = 1'-0"
S303

2 S313

No.	DATE	REVISIONS	APPROVED

DESIGNED: OAA
DRAWN: GMT
CHECKED: OAA

RBF CONSULTING

carollo

IRVINE RANCH WATER DISTRICT

M. OSAMA ABDEL-AAL	RCE NO. 34252	PROJECT MANAGER	DATE
JIM MEYERHOFER	RCE NO. 48451	PROJECT MANAGER	DATE
PATRICIA UEMATSU	RCE NO. 36762	PRINCIPAL ENGINEER	DATE

IRVINE RANCH WATER DISTRICT
BAKER WATER TREATMENT PLANT
PROJECT NO. 11218

TREATMAENT BUILDING
SECTION - A, B, C, AND D

DRAWING
S305
SHEET
229 OF 632

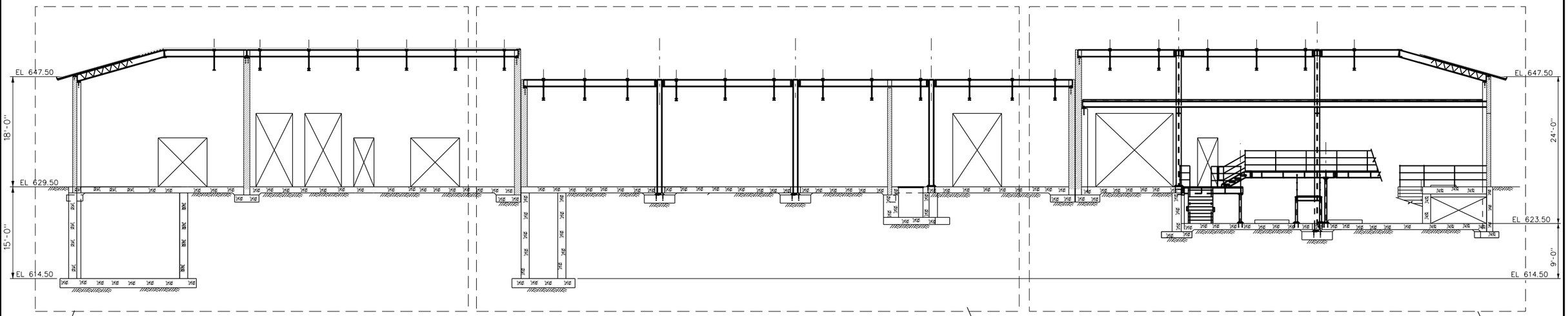

SECTION E S301 S303
SCALE: 1//8" = 1'-0"

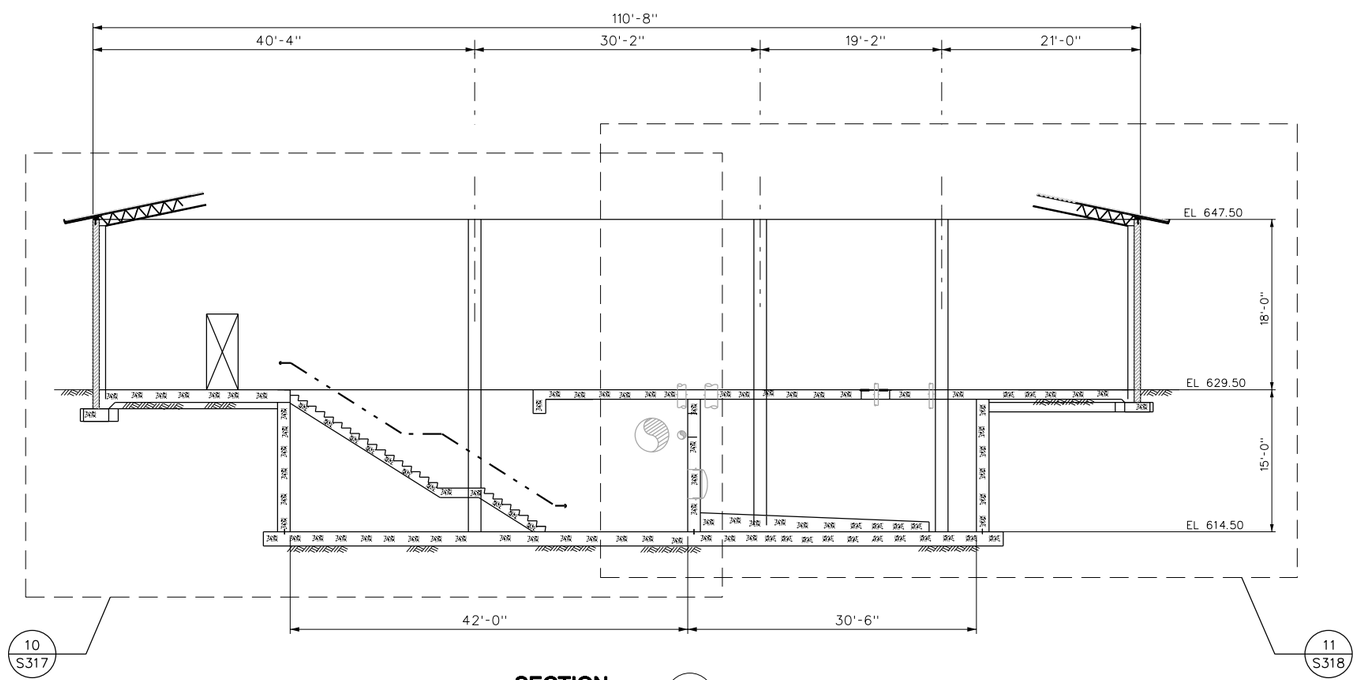

SECTION F S301 S302, S303
SCALE: 1//8" = 1'-0"

No.	DATE	REVISIONS	APPROVED

DESIGNED: OAA
DRAWN: GMT
CHECKED: OAA

RBF CONSULTING

carollo

IRVINE RANCH WATER DISTRICT

M. OSAMA ABDEL-AAL RCE NO. 34252 PROJECT MANAGER DATE
JIM MEYERHOFER RCE NO. 48451 PROJECT MANAGER DATE
PATRICIA UEMATSU RCE NO. 36762 PRINCIPAL ENGINEER DATE

IRVINE RANCH WATER DISTRICT
BAKER WATER TREATMENT PLANT
PROJECT NO. 11218

TREATMAENT BUILDING SECTION - E AND F

DRAWING **S306**
SHEET **230** OF 632

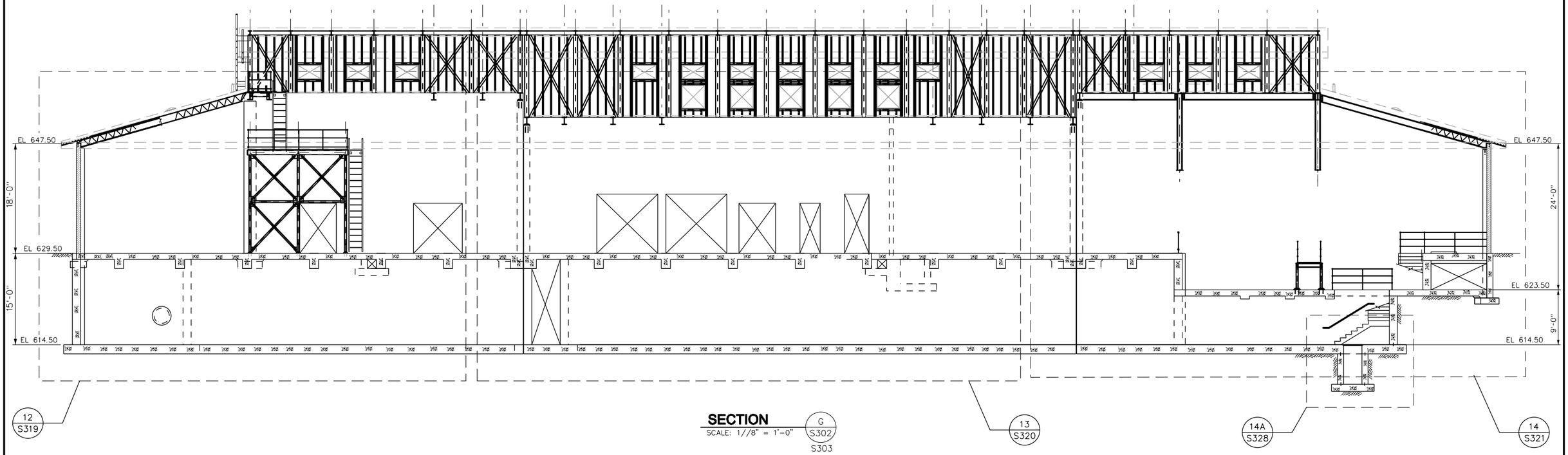

SECTION G S302 S303
SCALE: 1//8" = 1'-0"

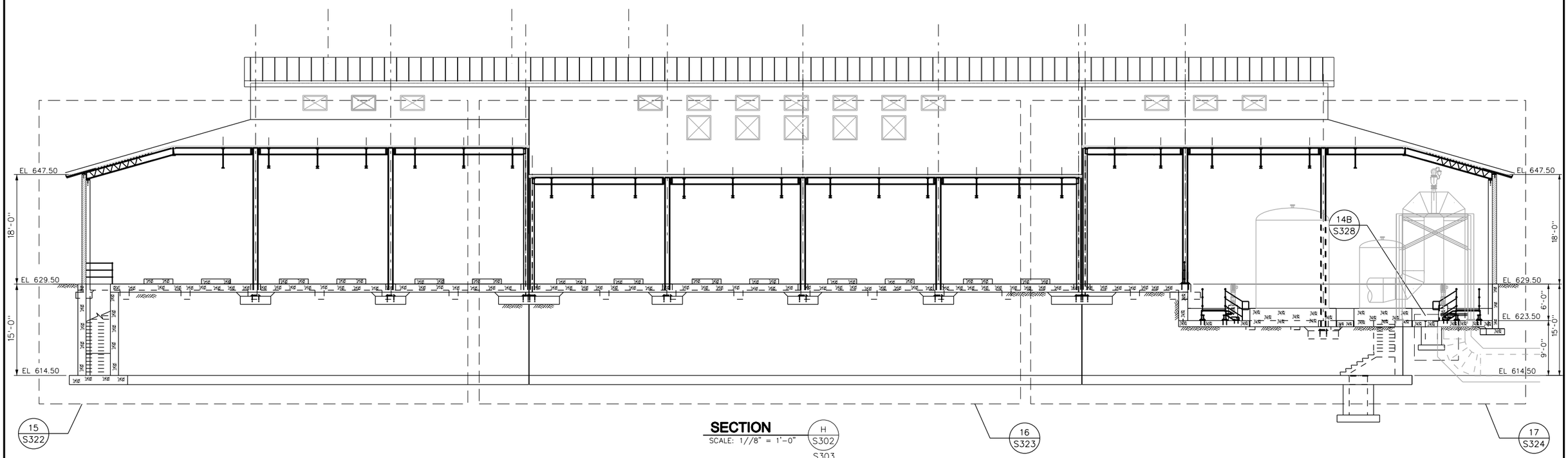

SECTION H S302 S303
SCALE: 1//8" = 1'-0"

No.	DATE	REVISIONS	APPROVED

DESIGNED: OAA
DRAWN: GMT
CHECKED: OAA

RBF CONSULTING

carollo

IRVINE RANCH WATER DISTRICT

M. OSAMA ABDEL-AAL RCE NO. 34252 PROJECT MANAGER DATE
JIM MEYERHOFER RCE NO. 48451 PROJECT MANAGER DATE
PATRICIA UEMATSU RCE NO. 36762 PRINCIPAL ENGINEER DATE

IRVINE RANCH WATER DISTRICT
BAKER WATER TREATMENT PLANT
PROJECT NO. 11218

TREATMAENT BUILDING
SECTION - G AND H

DRAWING S307
SHEET 231 OF 632

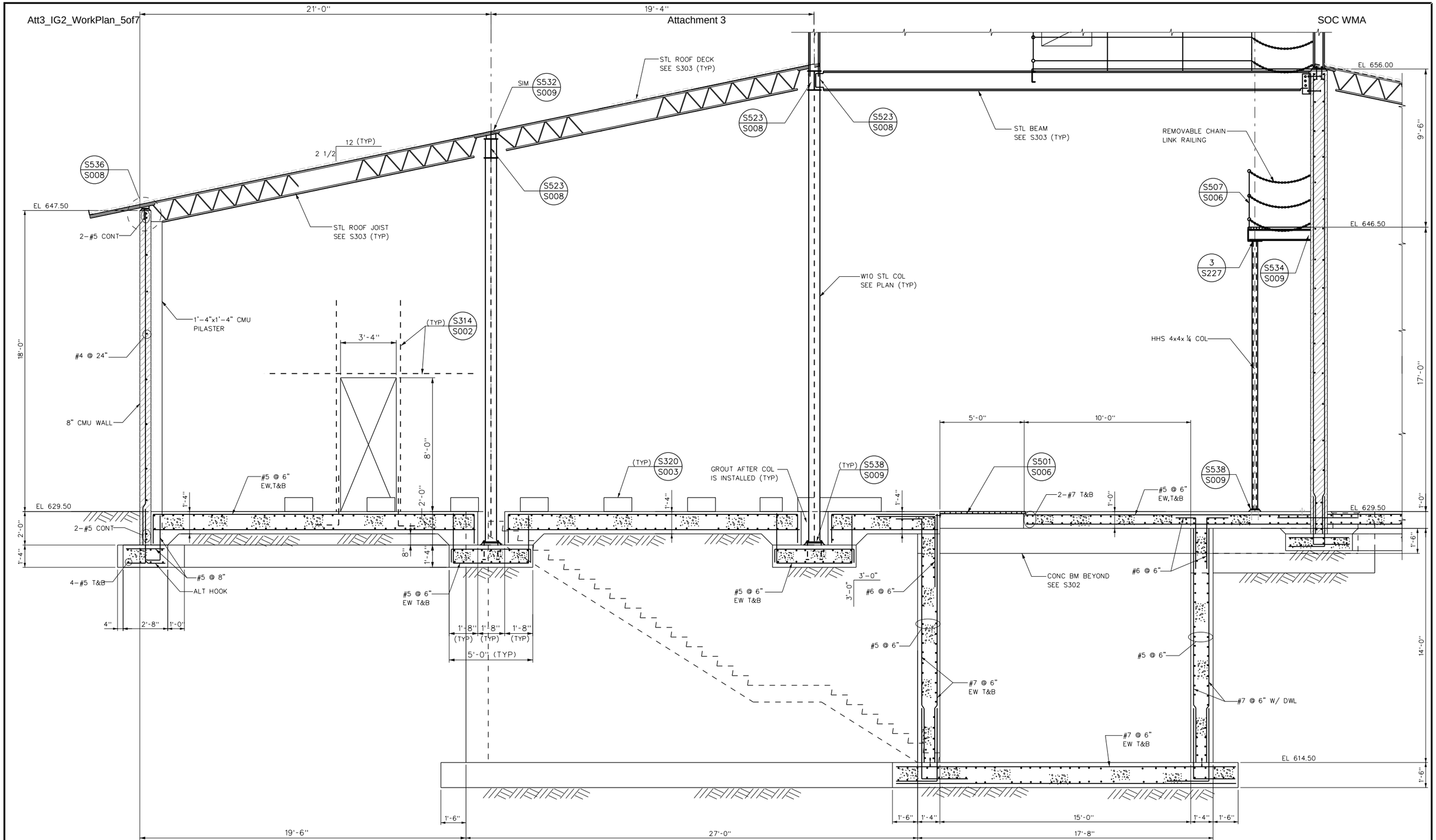

DETAIL 1 / S305
SCALE: 3/8"=1'-0"

No.	DATE	REVISIONS	APPROVED

DESIGNED: OAA
DRAWN: GMT
CHECKED: OAA

RBF CONSULTING

carollo

IRVINE RANCH WATER DISTRICT

M. OSAMA ABDEL-AAL	RCE NO. 34252	PROJECT MANAGER	DATE
JIM MEYERHOFER	RCE NO. 48451	PROJECT MANAGER	DATE
PATRICIA UEMATSU	RCE NO. 36762	PRINCIPAL ENGINEER	DATE

IRVINE RANCH WATER DISTRICT
BAKER WATER TREATMENT PLANT
PROJECT NO. 11218

TREATMENT BUILDING
DETAIL - 1

DRAWING
S308
SHEET
232 OF 632

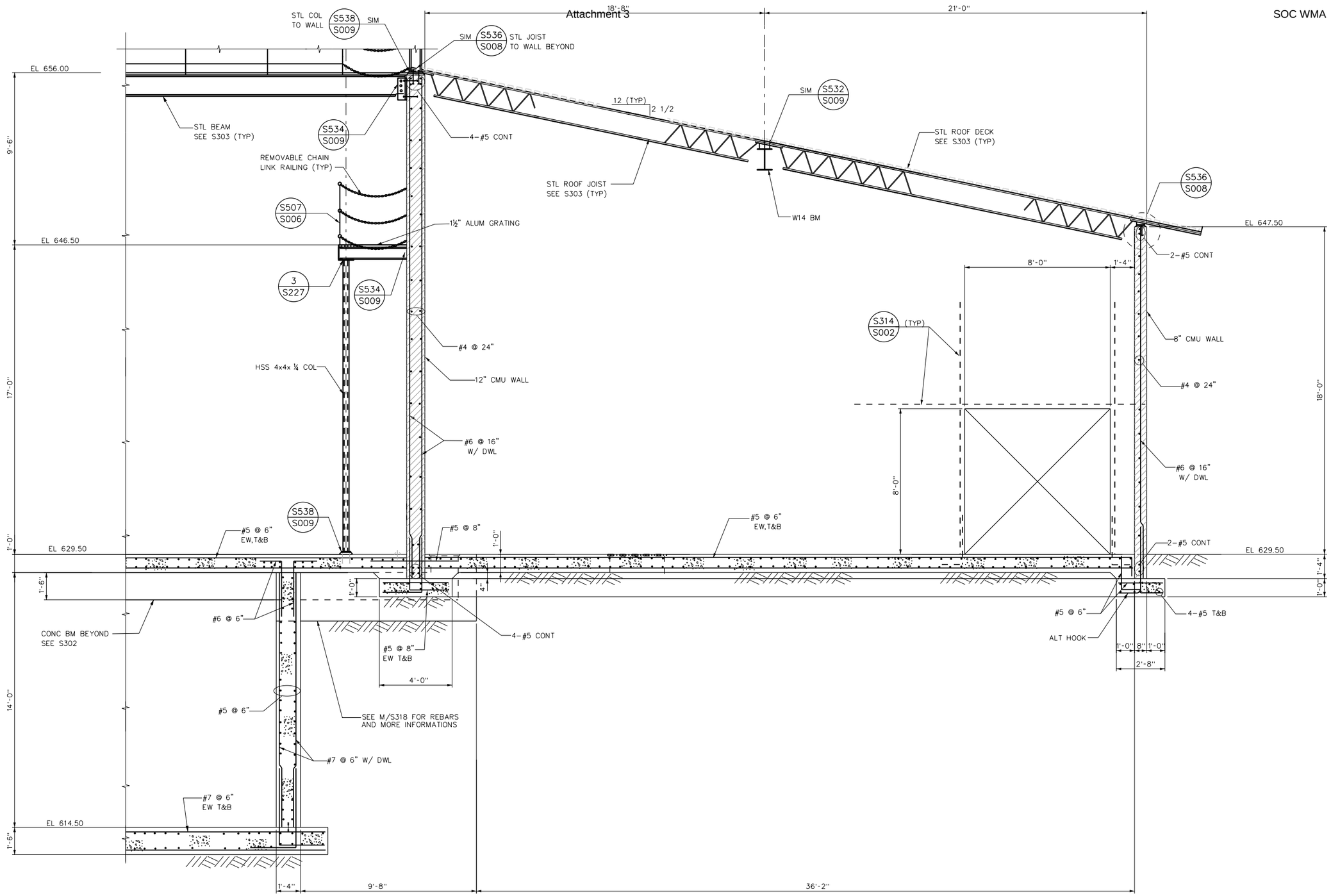

DETAIL 2/S305
SCALE: 3/8"=1'-0"

No.	DATE	REVISIONS	APPROVED

DESIGNED: OAA
DRAWN: GMT
CHECKED: OAA

RBF CONSULTING
carollo
IRVINE RANCH WATER DISTRICT

M. OSAMA ABDEL-AAL	RCE NO. 34252	PROJECT MANAGER	DATE
JIM MEYERHOFER	RCE NO. 48451	PROJECT MANAGER	DATE
PATRICIA UEMATSU	RCE NO. 36762	PRINCIPAL ENGINEER	DATE

IRVINE RANCH WATER DISTRICT
BAKER WATER TREATMENT PLANT
PROJECT NO. 11218

TREATMENT BUILDING DETAIL - 2

DRAWING **S309**
SHEET 233 OF 632

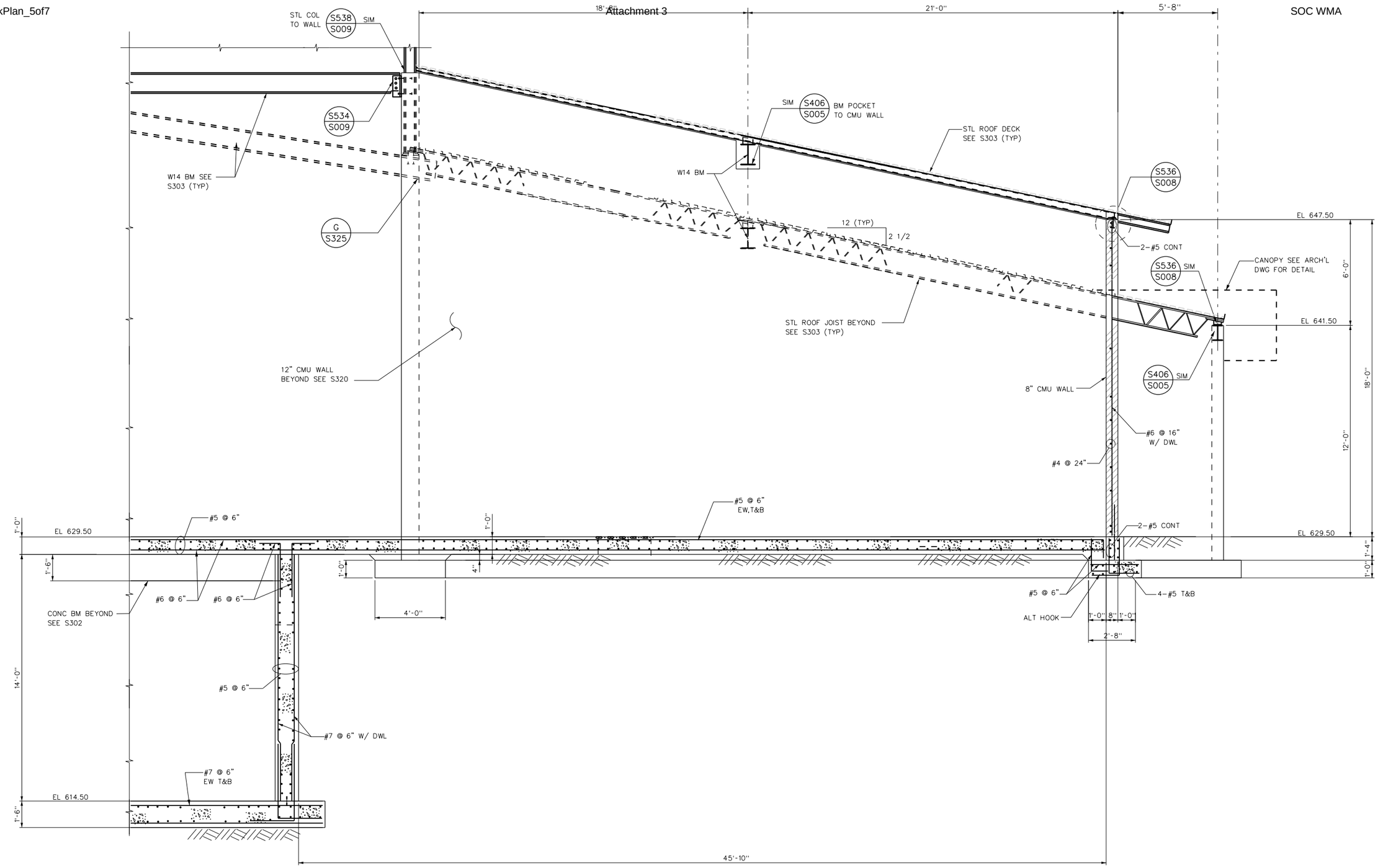

DETAIL 3 / S305
SCALE: 3/8"=1'-0"

No.	DATE	REVISIONS	APPROVED

DESIGNED: OAA
DRAWN: GMT
CHECKED: OAA

RBF CONSULTING

carollo

IRVINE RANCH WATER DISTRICT

M. OSAMA ABDEL-AAL	RCE NO. 34252	PROJECT MANAGER	DATE
JIM MEYERHOFER	RCE NO. 48451	PROJECT MANAGER	DATE
PATRICIA UEMATSU	RCE NO. 36762	PRINCIPAL ENGINEER	DATE

IRVINE RANCH WATER DISTRICT
BAKER WATER TREATMENT PLANT
PROJECT NO. 11218

TREATMENT BUILDING DETAIL - 3

DRAWING **S310**
SHEET **234** OF 632

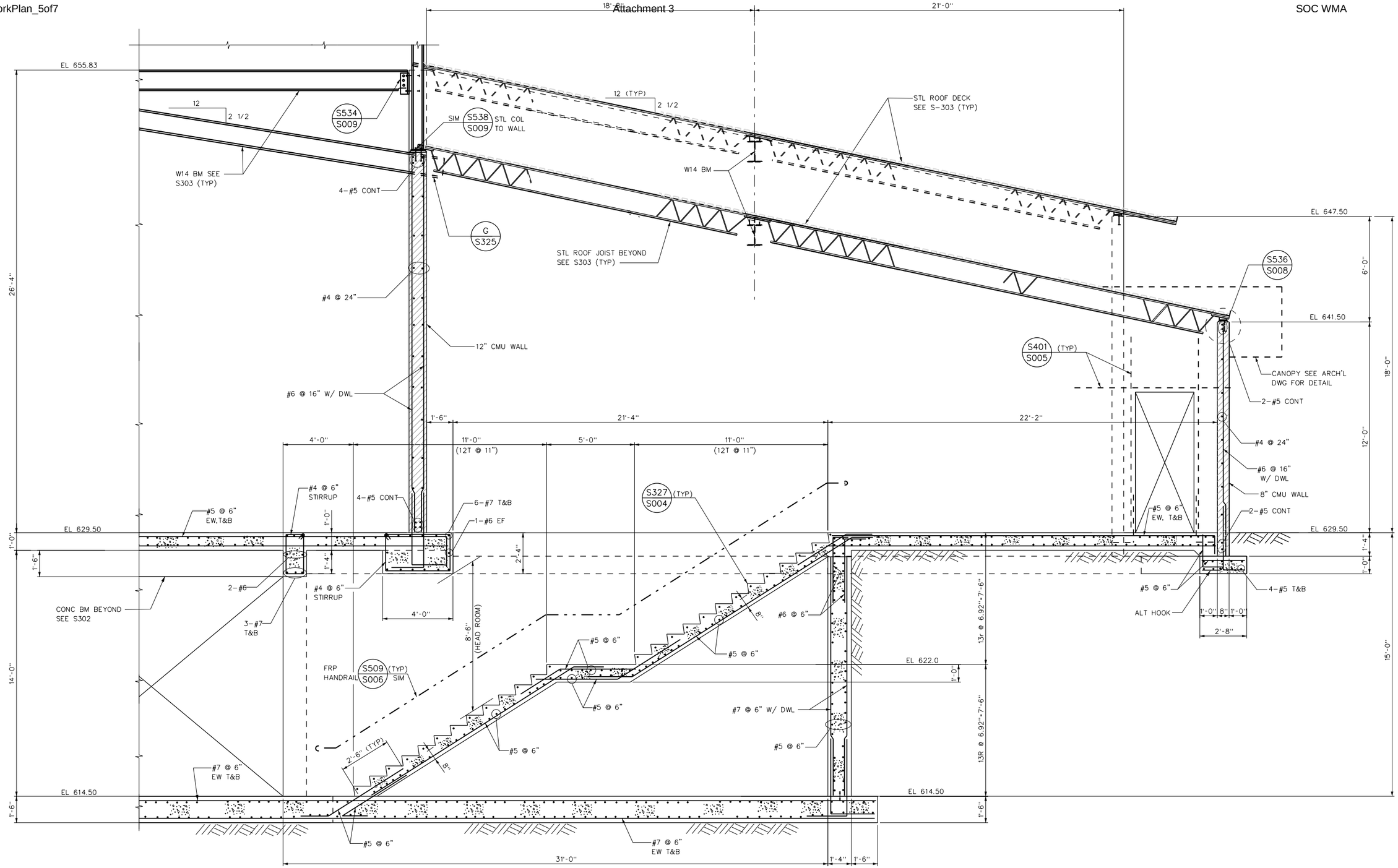

DETAIL 4 / S305
SCALE: 3/8"=1'-0"

No.	DATE	REVISIONS	APPROVED

DESIGNED: OAA
DRAWN: GMT
CHECKED: OAA

RBF CONSULTING
carollo
IRVINE RANCH WATER DISTRICT

M. OSAMA ABDEL-AAL	RCE NO. 34252	PROJECT MANAGER	DATE
JIM MEYERHOFER	RCE NO. 48451	PROJECT MANAGER	DATE
PATRICIA UEMATSU	RCE NO. 36762	PRINCIPAL ENGINEER	DATE

IRVINE RANCH WATER DISTRICT
BAKER WATER TREATMENT PLANT
PROJECT NO. 11218

TREATMENT BUILDING
DETAIL - 4

DRAWING
S311
SHEET
235 OF 632

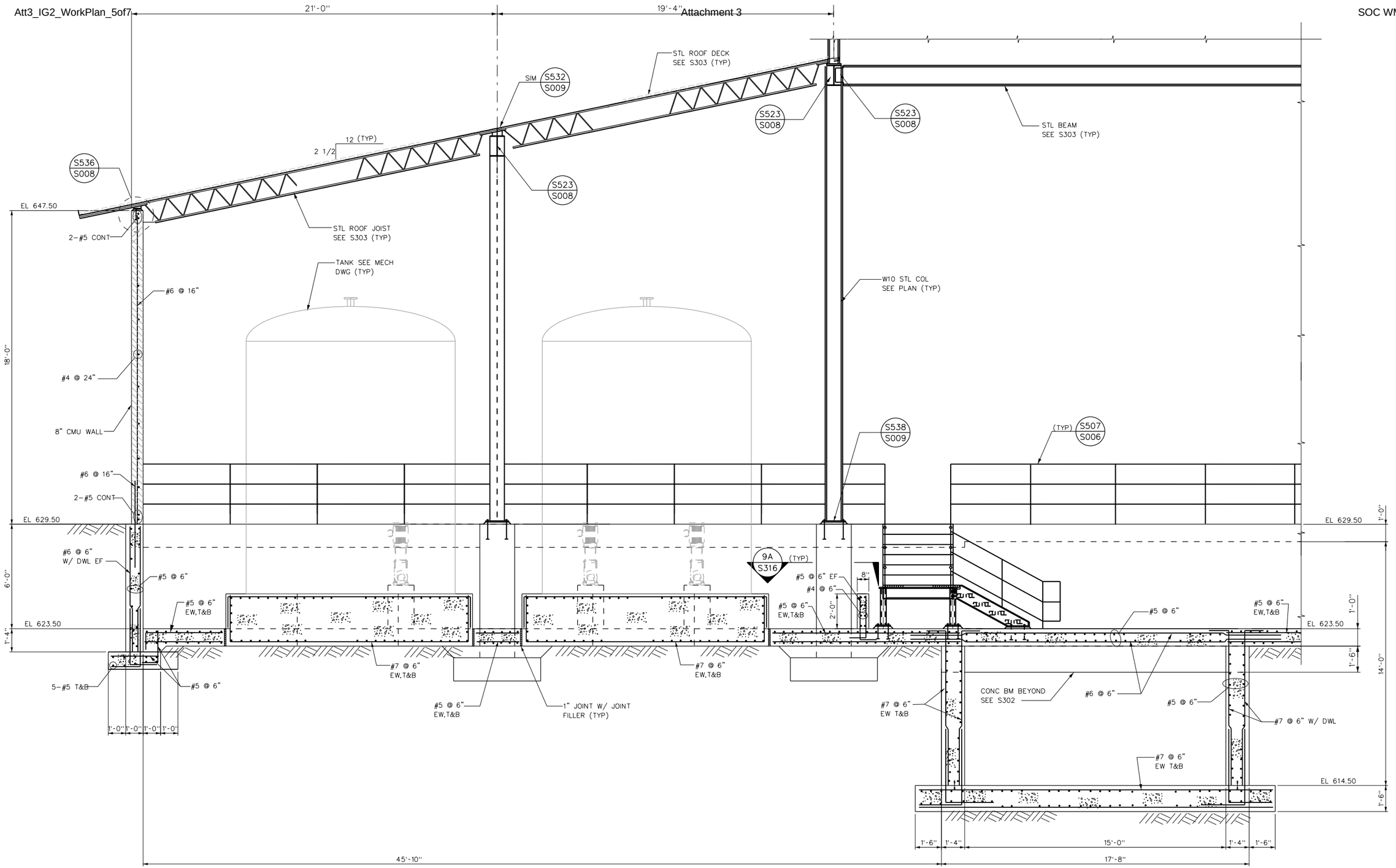

DETAIL 5 / S305
SCALE: 3/8"=1'-0"

No.	DATE	REVISIONS	APPROVED

DESIGNED: OAA
DRAWN: GMT
CHECKED: OAA

RBF CONSULTING

carollo

IRVINE RANCH WATER DISTRICT

M. OSAMA ABDEL-AAL RCE NO. 34252 PROJECT MANAGER DATE
JIM MEYERHOFER RCE NO. 48451 PROJECT MANAGER DATE
PATRICIA UEMATSU RCE NO. 36762 PRINCIPAL ENGINEER DATE

IRVINE RANCH WATER DISTRICT
BAKER WATER TREATMENT PLANT
PROJECT NO. 11218

TREATMENT BUILDING
DETAIL - 5

DRAWING
S312
SHEET
236 OF 632

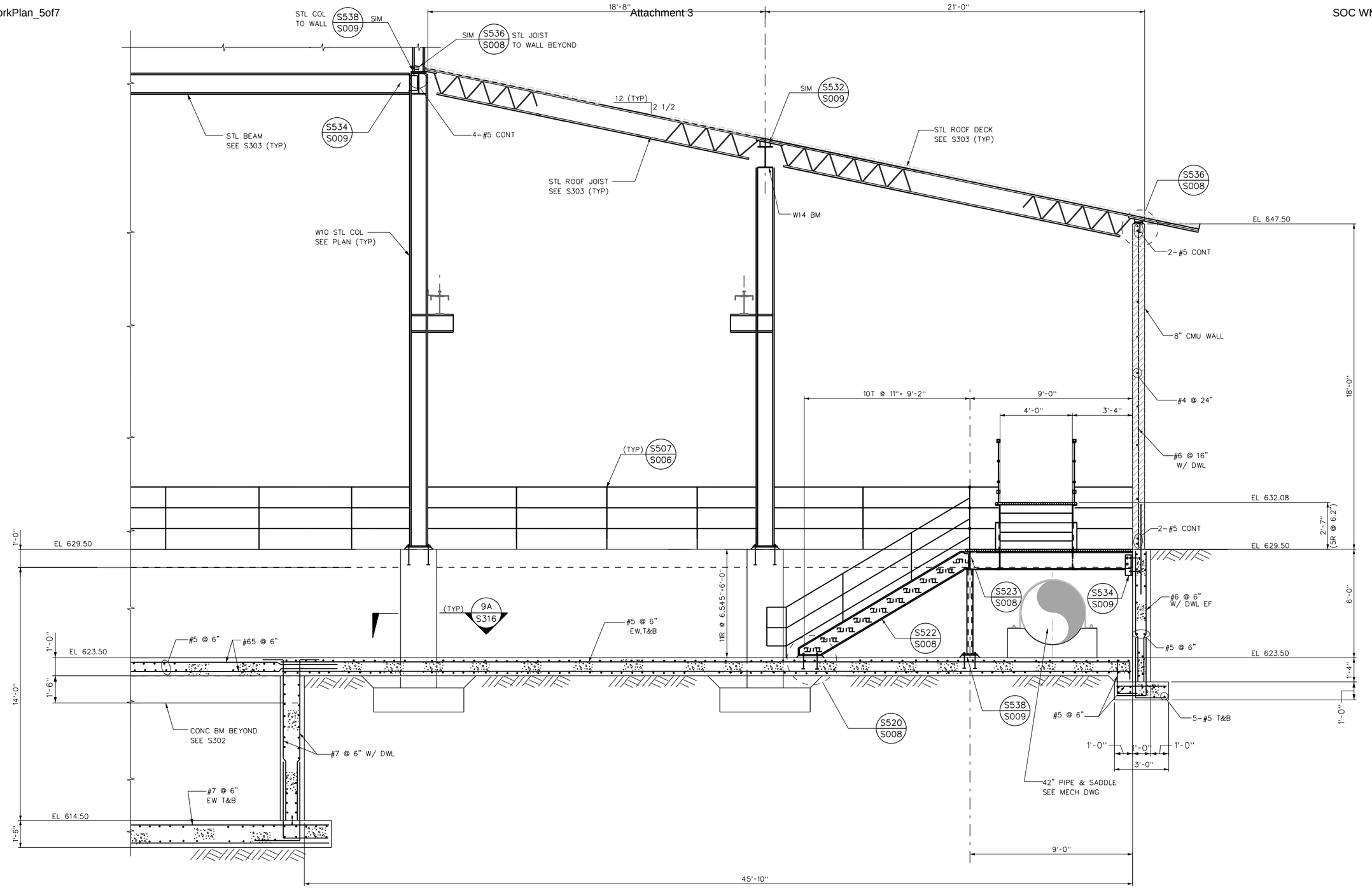

DETAIL 2 S305
SCALE: 3/8"=1'-0"

No.	DATE	REVISIONS	APPROVED

DESIGNED: OAA
DRAWN: GMT
CHECKED: OAA

RBF CONSULTING

carollo

IRVINE RANCH WATER DISTRICT

M. OSAMA ABDEL-AAL RCE NO. 34252 PROJECT MANAGER DATE
JIM MEYERHOFER RCE NO. 48451 PROJECT MANAGER DATE
PATRICIA UEMATSU RCE NO. 36762 PRINCIPAL ENGINEER DATE

IRVINE RANCH WATER DISTRICT
BAKER WATER TREATMENT PLANT
PROJECT NO. 11218

TREATMENT BUILDING
DETAIL - 6

DRAWING
S313
SHEET
237 OF 632

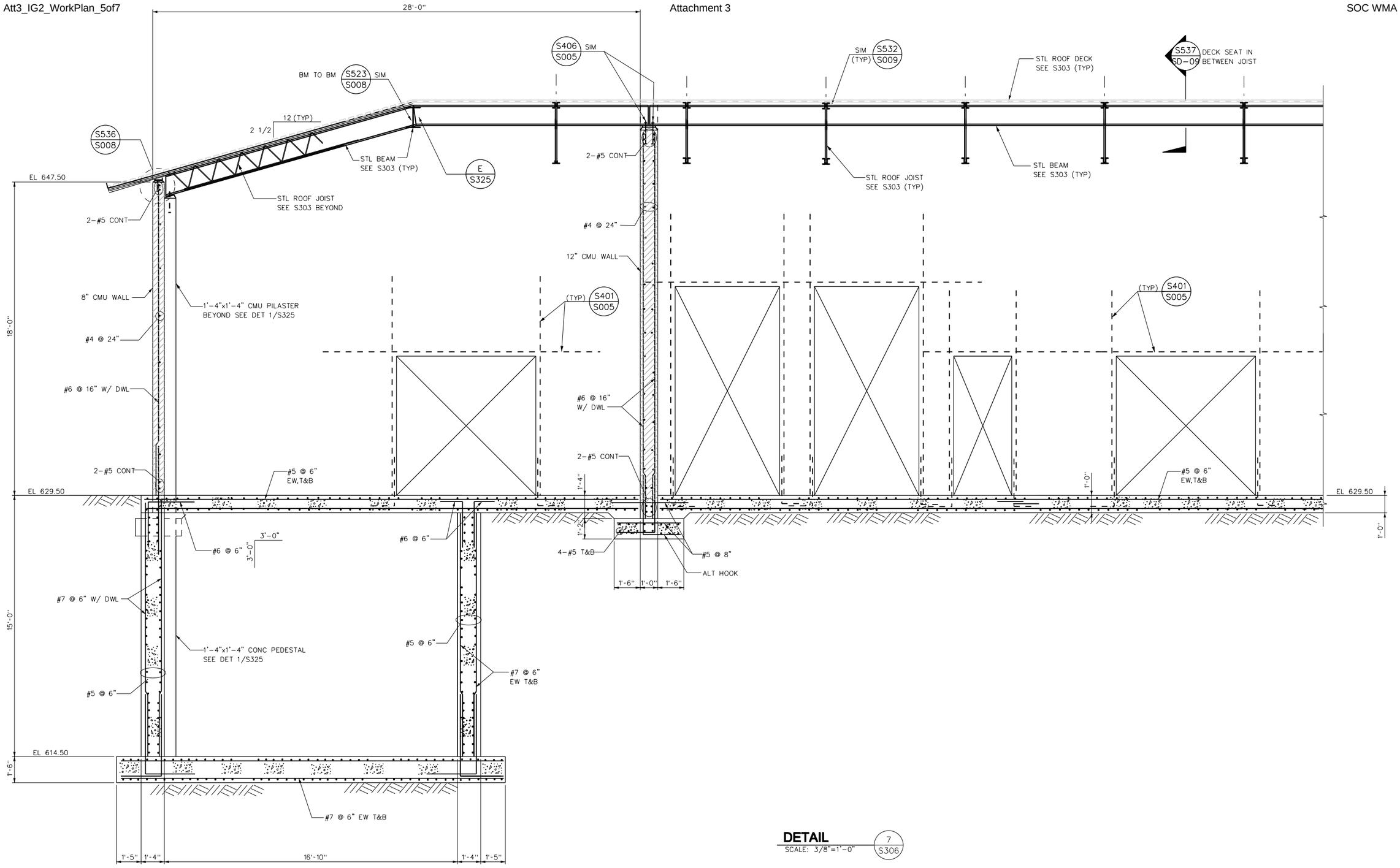

DETAIL 7 / S306
SCALE: 3/8"=1'-0"

No.	DATE	REVISIONS	APPROVED

DESIGNED: OAA
DRAWN: GMT
CHECKED: OAA

RBF CONSULTING

carollo

IRVINE RANCH WATER DISTRICT

M. OSAMA ABDEL-AAL RCE NO. 34252 PROJECT MANAGER DATE
JIM MEYERHOFER RCE NO. 48451 PROJECT MANAGER DATE
PATRICIA UEMATSU RCE NO. 36762 PRINCIPAL ENGINEER DATE

IRVINE RANCH WATER DISTRICT
BAKER WATER TREATMENT PLANT
PROJECT NO. 11218

TREATMENT BUILDING
DETAIL - 7

DRAWING
S314
SHEET
238 OF 632

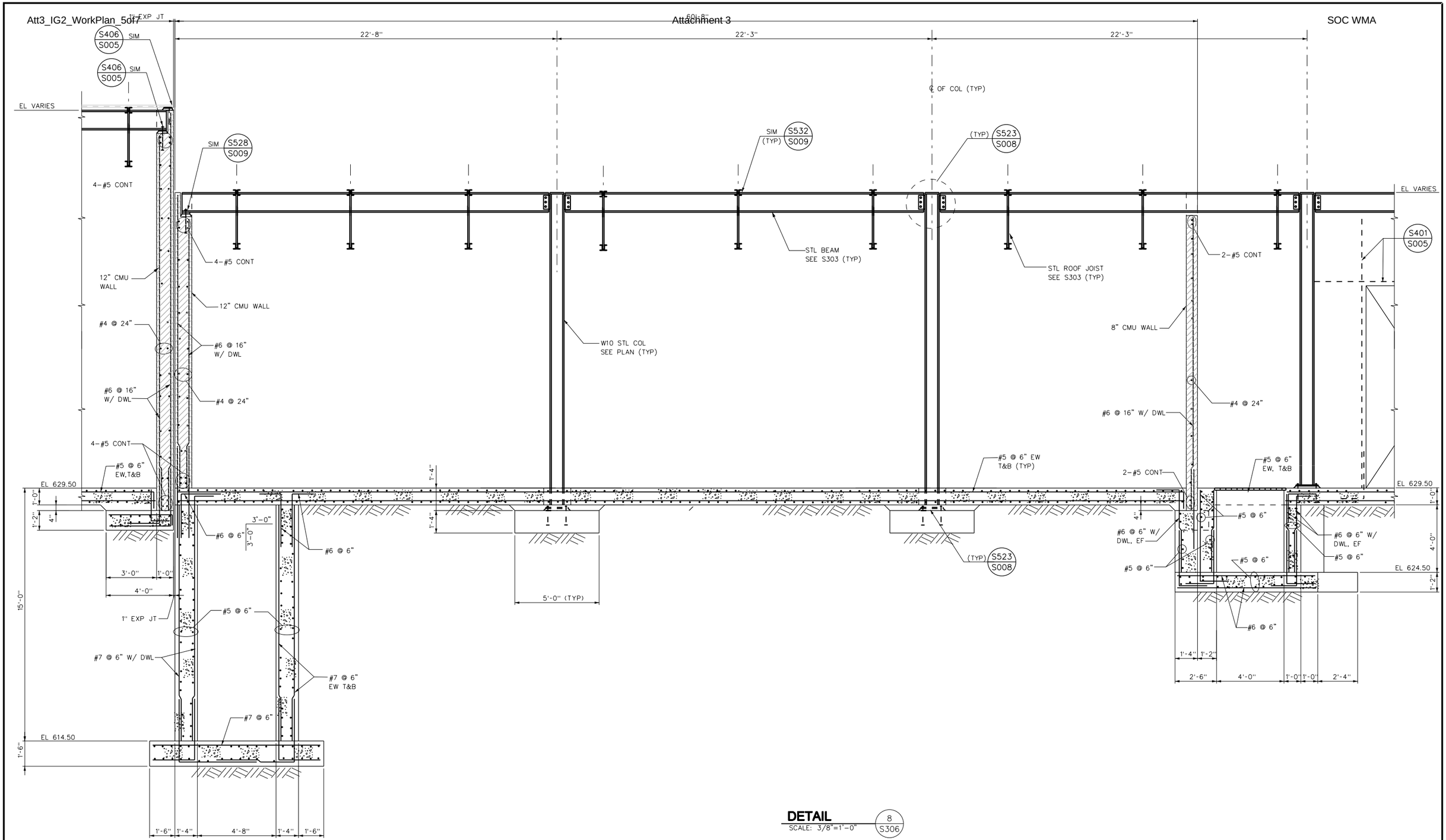

DETAIL 8 / S306
SCALE: 3/8"=1'-0"

No.	DATE	REVISIONS	APPROVED

DESIGNED: OAA
DRAWN: GMT
CHECKED: OAA

RBF CONSULTING

carollo

IRVINE RANCH WATER DISTRICT

M. OSAMA ABDEL-AAL RCE NO. 34252 PROJECT MANAGER DATE
JIM MEYERHOFER RCE NO. 48451 PROJECT MANAGER DATE
PATRICIA UEMATSU RCE NO. 36762 PRINCIPAL ENGINEER DATE

IRVINE RANCH WATER DISTRICT
BAKER WATER TREATMENT PLANT
PROJECT NO. 11218

TREATMENT BUILDING
DETAIL - 8

DRAWING S315
SHEET 239 OF 632

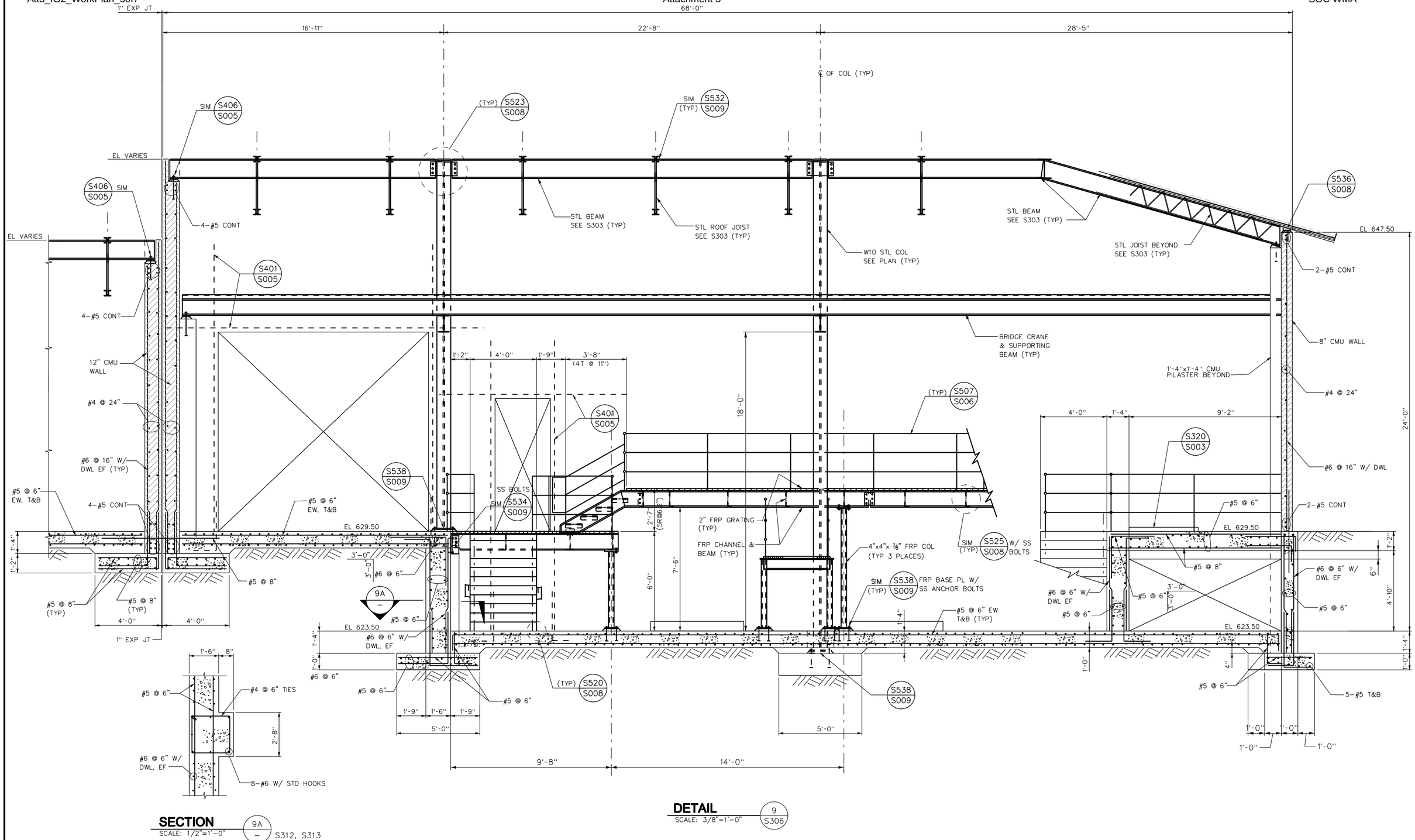

No.	DATE	REVISIONS	APPROVED

DESIGNED: OAA
DRAWN: GMT
CHECKED: OAA

RBF CONSULTING

carollo

IRVINE RANCH WATER DISTRICT

M. OSAMA ABDEL-AAL	RCE NO. 34252	PROJECT MANAGER	DATE
JIM MEYERHOFER	RCE NO. 48451	PROJECT MANAGER	DATE
PATRICIA UEMATSU	RCE NO. 36762	PRINCIPAL ENGINEER	DATE

IRVINE RANCH WATER DISTRICT
BAKER WATER TREATMENT PLANT
PROJECT NO. 11218

TREATMENT BUILDING
DETAIL - 9

DRAWING
S316
SHEET
240 OF 632

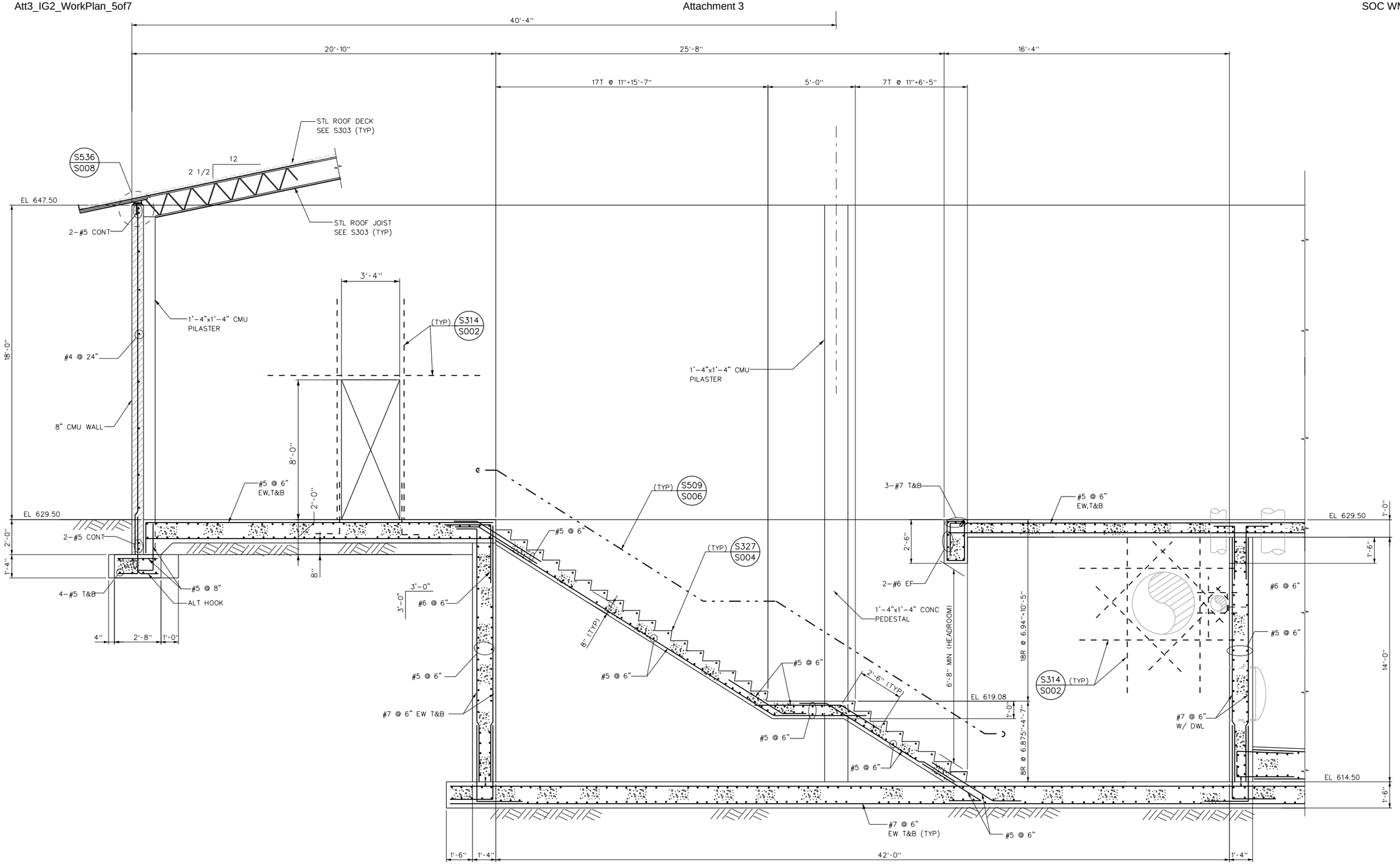

DETAIL 10 / S306

SCALE: 3/8"=1'-0"

No.	DATE	REVISIONS	APPROVED

DESIGNED: OAA
DRAWN: GMT
CHECKED: OAA

RBF CONSULTING

carollo

IRVINE RANCH WATER DISTRICT

M. OSAMA ABDEL-AAL	RCE NO. 34252	PROJECT MANAGER	DATE
JIM MEYERHOFER	RCE NO. 48451	PROJECT MANAGER	DATE
PATRICIA UEMATSU	RCE NO. 36762	PRINCIPAL ENGINEER	DATE

IRVINE RANCH WATER DISTRICT
BAKER WATER TREATMENT PLANT
PROJECT NO. 11218

TREATMENT BUILDING
DETAIL - 10

DRAWING
S317
SHEET
241 OF 632

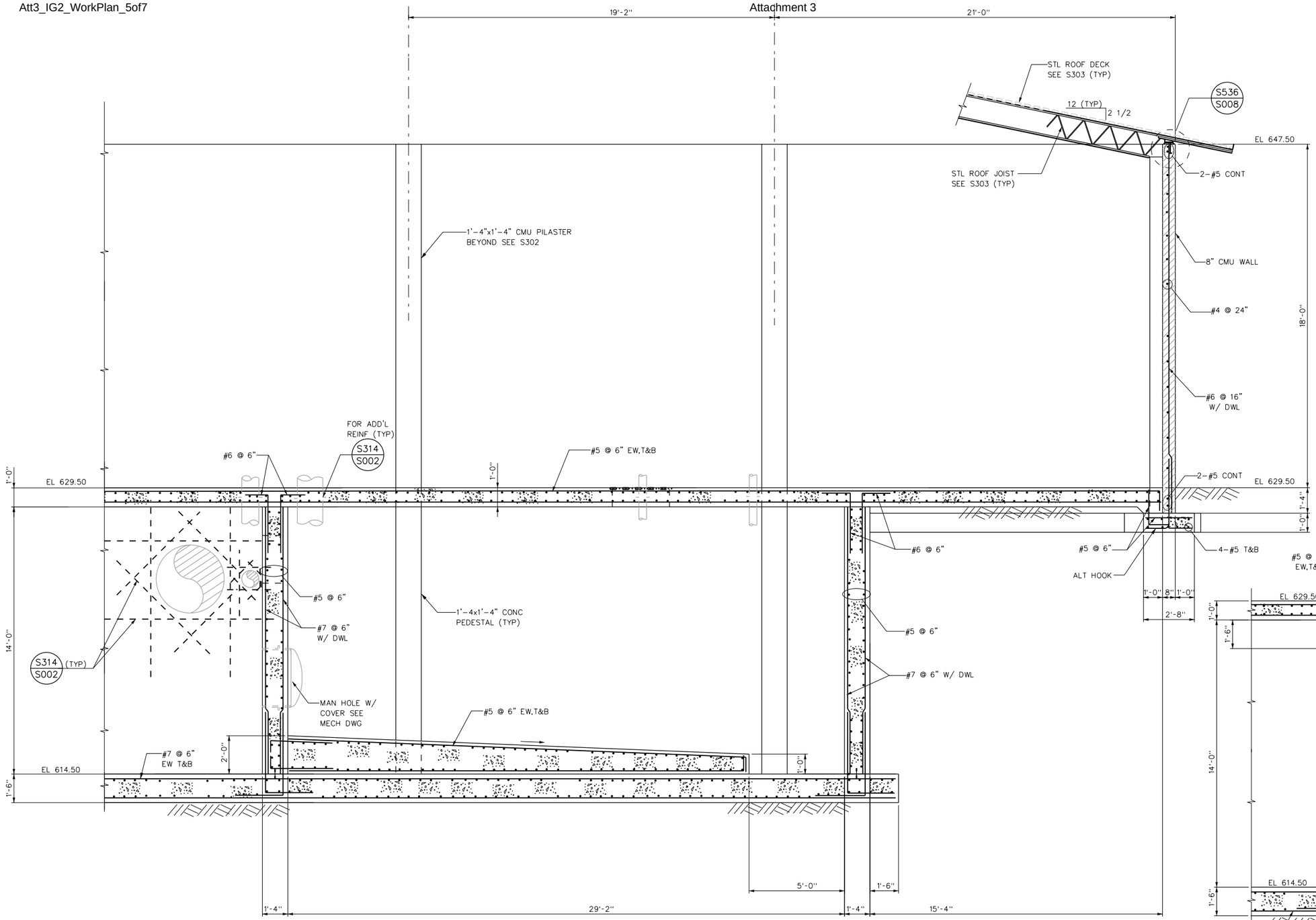

DETAIL 11/S306
SCALE: 3/8"=1'-0"

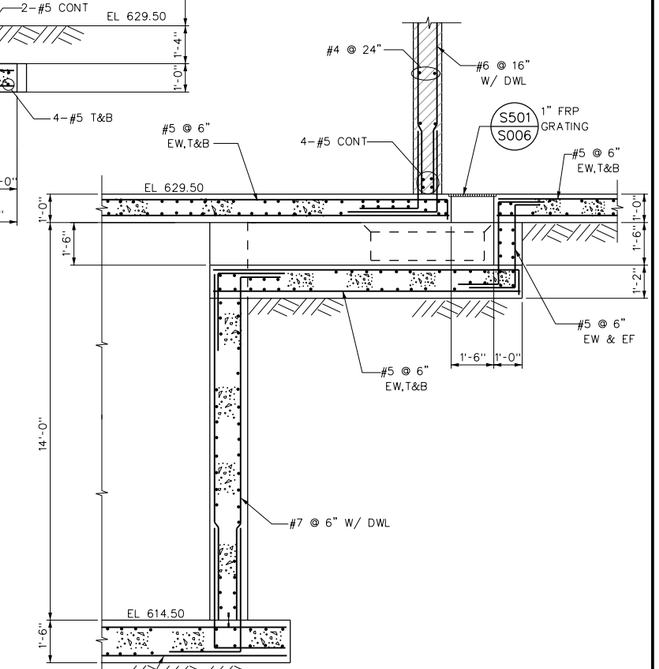

SECTION M/S302
SCALE: 3/8"=1'-0"

No.	DATE	REVISIONS	APPROVED

DESIGNED: OAA
DRAWN: GMT
CHECKED: OAA

RBF CONSULTING

carollo

IRVINE RANCH WATER DISTRICT

M. OSAMA ABDEL-AAL RCE NO. 34252 PROJECT MANAGER DATE
JIM MEYERHOFER RCE NO. 48451 PROJECT MANAGER DATE
PATRICIA UEMATSU RCE NO. 36762 PRINCIPAL ENGINEER DATE

IRVINE RANCH WATER DISTRICT
BAKER WATER TREATMENT PLANT
PROJECT NO. 11218

TREATMENT BUILDING
DETAIL - 11 & SECTION - M

DRAWING
S318
SHEET
242 OF 632

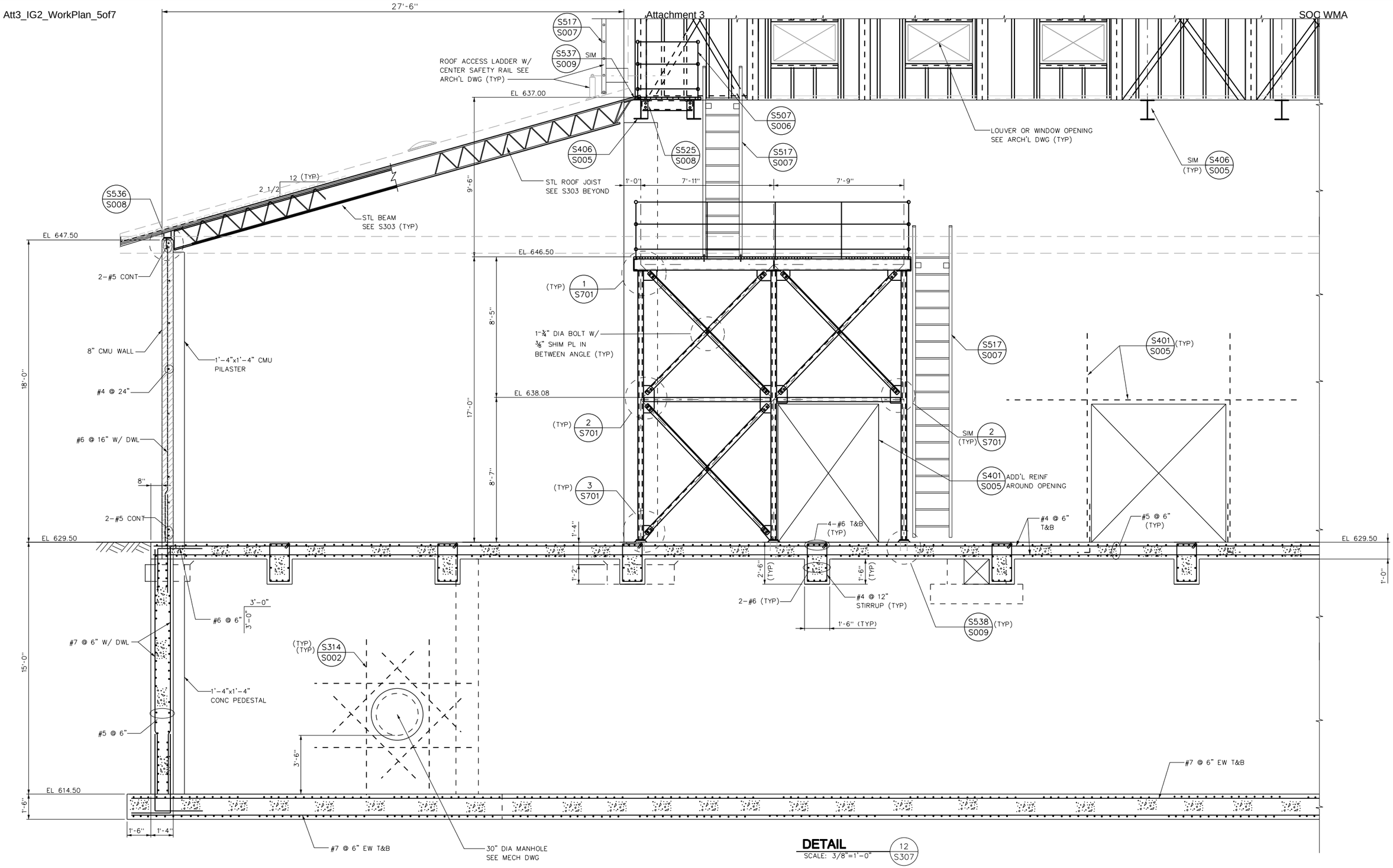

DETAIL 12 / S307
SCALE: 3/8"=1'-0"

No.	DATE	REVISIONS	APPROVED

DESIGNED: OAA
DRAWN: GMT
CHECKED: OAA

RBF CONSULTING
carollo
IRVINE RANCH WATER DISTRICT

M. OSAMA ABDEL-AAL RCE NO. 34252 PROJECT MANAGER DATE
JIM MEYERHOFER RCE NO. 48451 PROJECT MANAGER DATE
PATRICIA UEMATSU RCE NO. 36762 PRINCIPAL ENGINEER DATE

IRVINE RANCH WATER DISTRICT
BAKER WATER TREATMENT PLANT
PROJECT NO. 11218

TREATMENT BUILDING
DETAIL - 12

DRAWING
S319
SHEET
243 OF 632

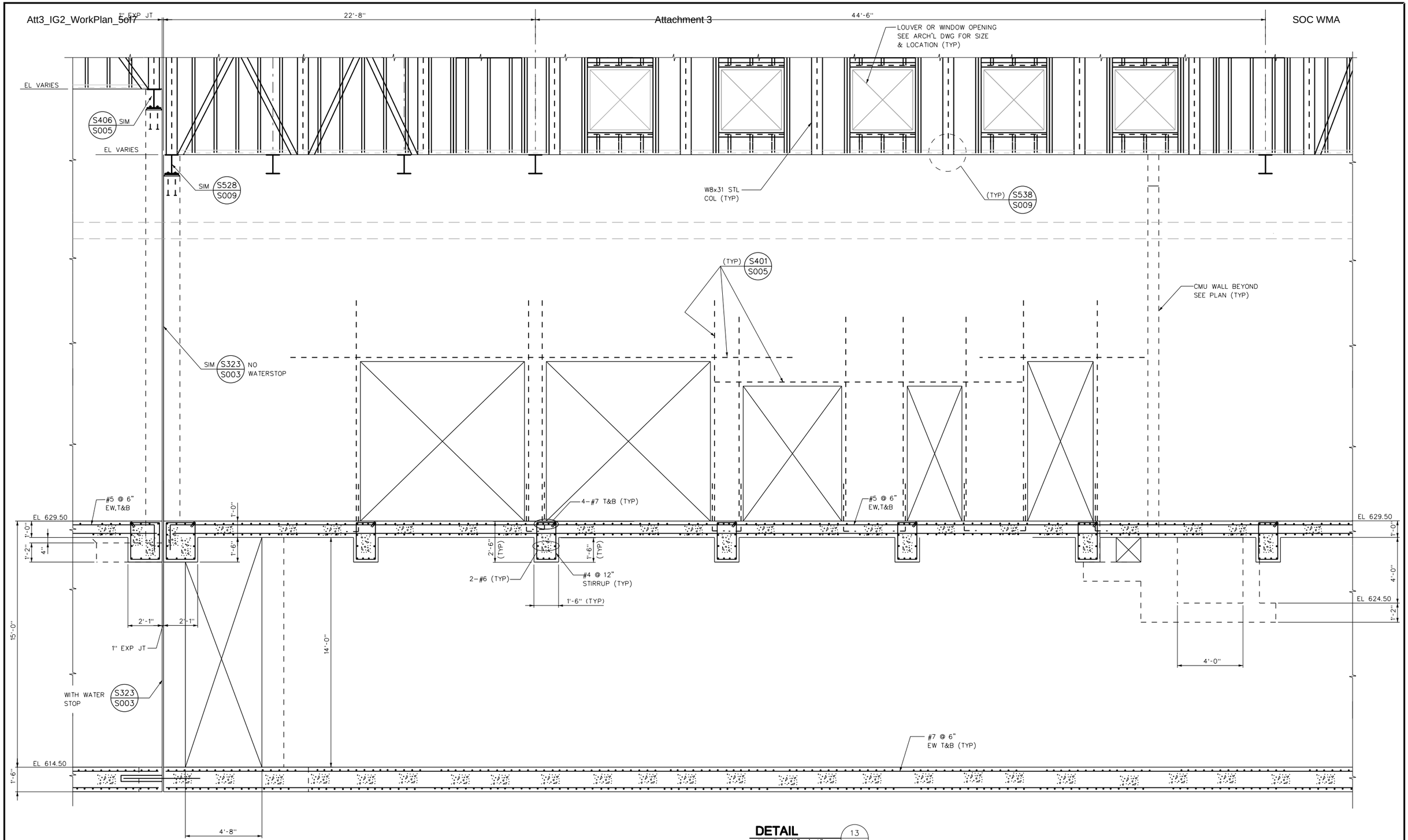

DETAIL 13/S307
SCALE: 3/8"=1'-0"

No.	DATE	REVISIONS	APPROVED

DESIGNED: OAA
DRAWN: GMT
CHECKED: OAA

RBF CONSULTING

carollo

IRVINE RANCH WATER DISTRICT

M. OSAMA ABDEL-AAL	RCE NO. 34252	PROJECT MANAGER	DATE
JIM MEYERHOFER	RCE NO. 48451	PROJECT MANAGER	DATE
PATRICIA UEMATSU	RCE NO. 36762	PRINCIPAL ENGINEER	DATE

IRVINE RANCH WATER DISTRICT
BAKER WATER TREATMENT PLANT
PROJECT NO. 11218

TREATMENT BUILDING
DETAIL - 13

DRAWING
S320
SHEET
244 OF 632

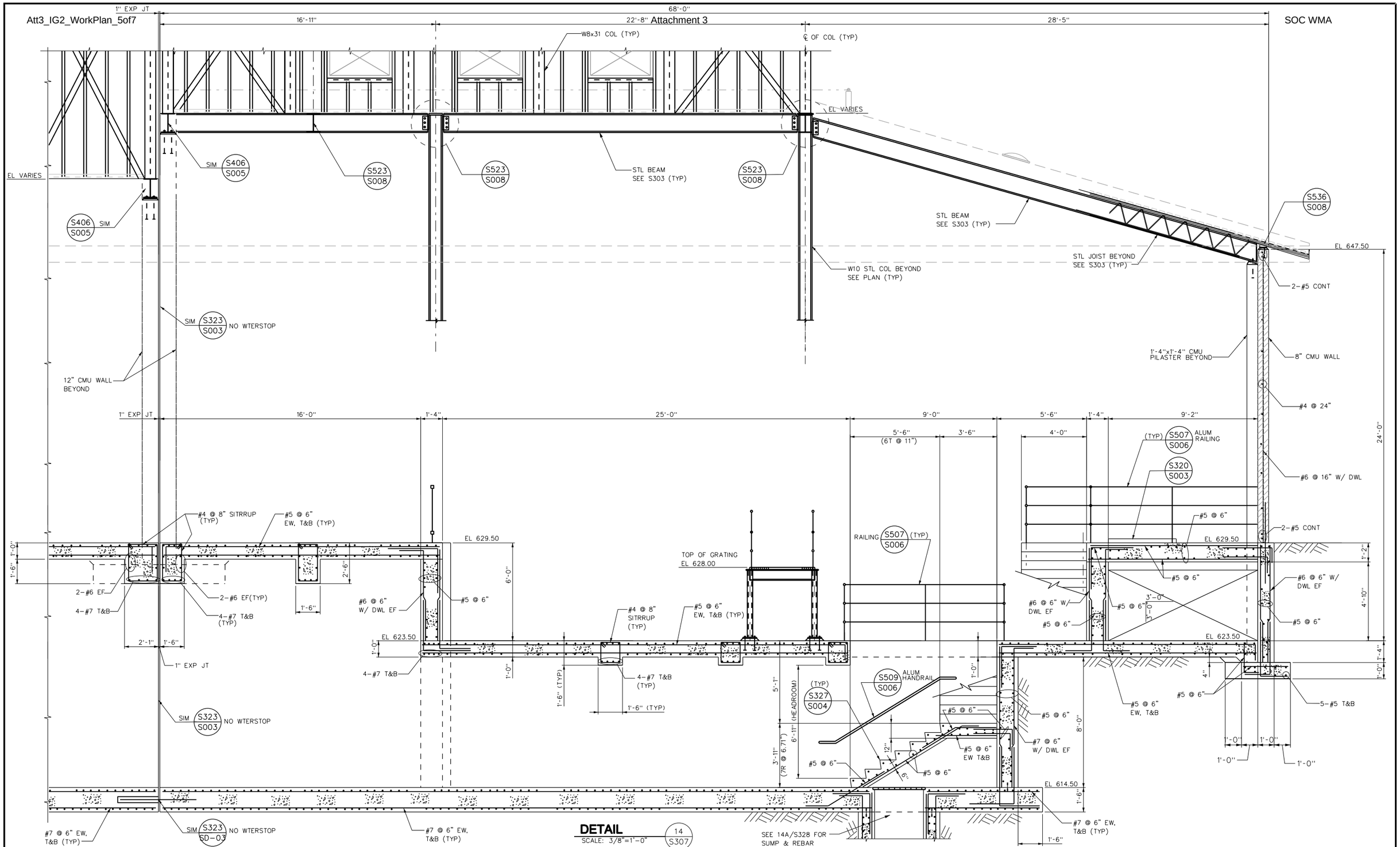

DETAIL 14 / S307
SCALE: 3/8"=1'-0"

No.	DATE	REVISIONS	APPROVED

DESIGNED: OAA
DRAWN: GMT
CHECKED: OAA

RBF CONSULTING

carollo

IRVINE RANCH WATER DISTRICT

M. OSAMA ABDEL-AAL	RCE NO. 34252	PROJECT MANAGER	DATE
JIM MEYERHOFER	RCE NO. 48451	PROJECT MANAGER	DATE
PATRICIA UEMATSU	RCE NO. 36762	PRINCIPAL ENGINEER	DATE

IRVINE RANCH WATER DISTRICT
BAKER WATER TREATMENT PLANT
PROJECT NO. 11218

TREATMENT BUILDING
DETAIL - 14

DRAWING
S321
SHEET

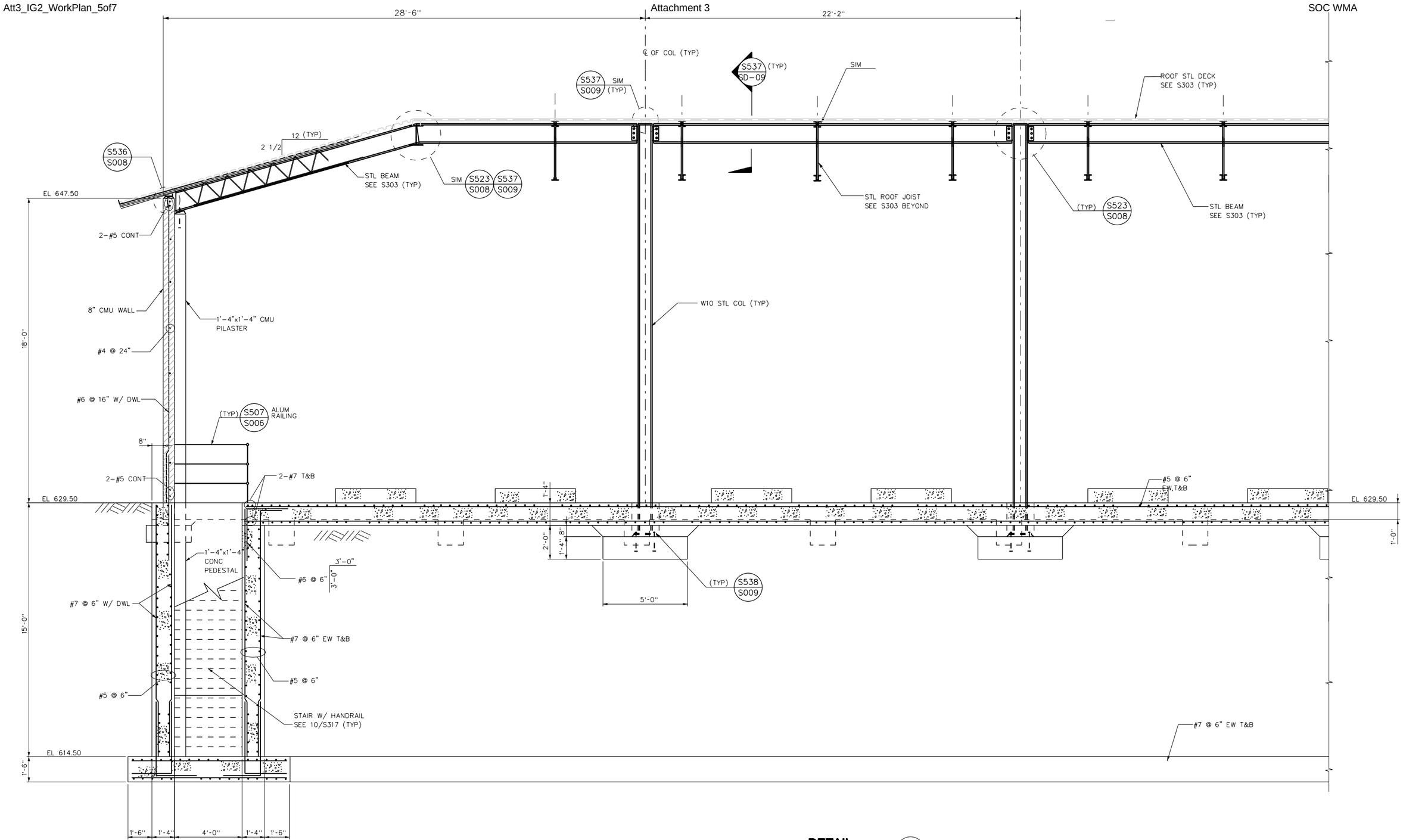

DETAIL 12 / S307
SCALE: 3/8"=1'-0"

No.	DATE	REVISIONS	APPROVED

DESIGNED: OAA
DRAWN: GMT
CHECKED: OAA

RBF CONSULTING
carollo
IRVINE RANCH WATER DISTRICT

M. OSAMA ABDEL-AAL RCE NO. 34252 PROJECT MANAGER DATE
JIM MEYERHOFER RCE NO. 48451 PROJECT MANAGER DATE
PATRICIA UEMATSU RCE NO. 36762 PRINCIPAL ENGINEER DATE

IRVINE RANCH WATER DISTRICT
BAKER WATER TREATMENT PLANT
PROJECT NO. 11218

TREATMENT BUILDING
DETAIL - 15

DRAWING
S322
SHEET
246 OF 632

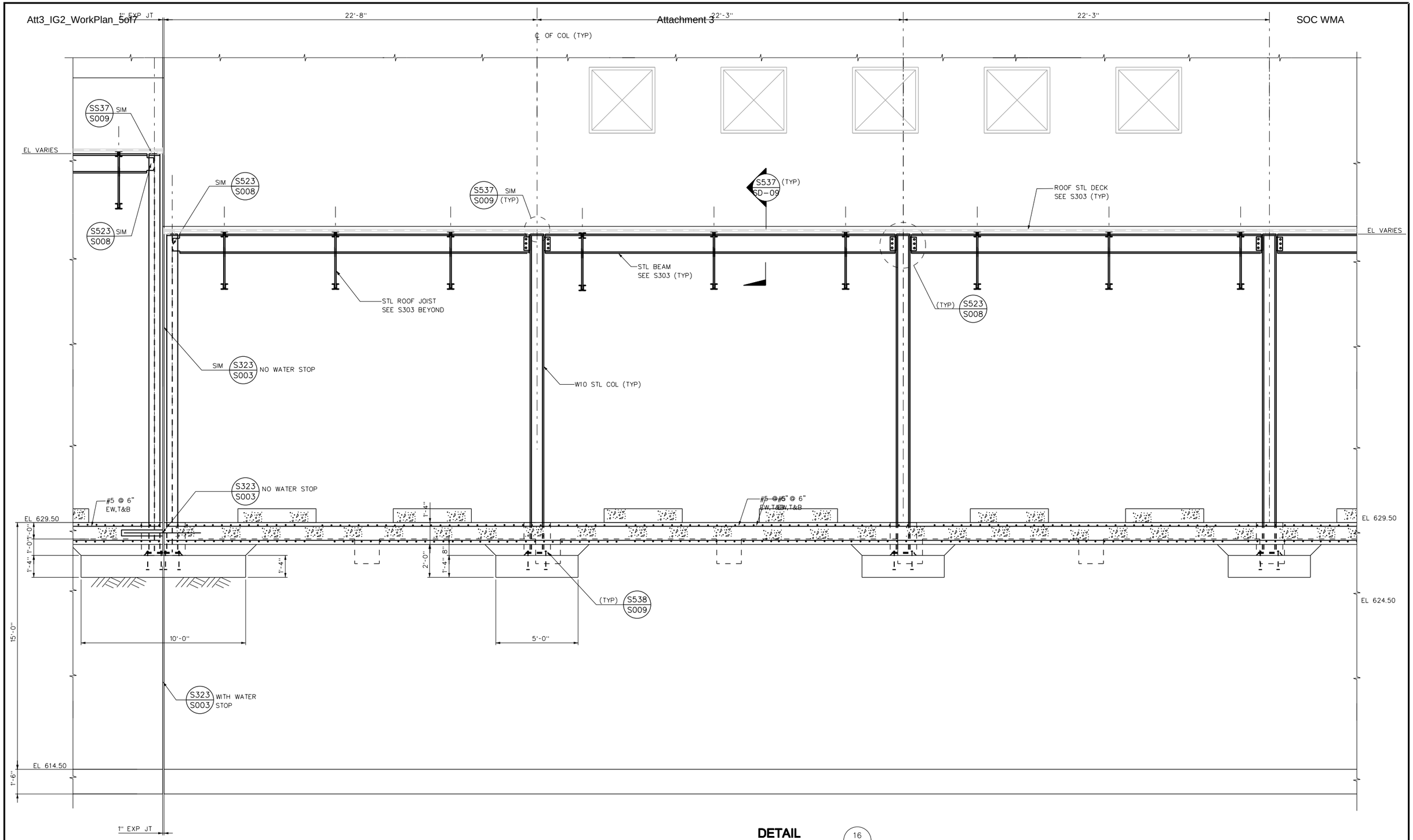

DETAIL 16 / S307
SCALE: 3/8"=1'-0"

No.	DATE	REVISIONS	APPROVED

DESIGNED: OAA
DRAWN: GMT
CHECKED: OAA

RBF CONSULTING

carollo

IRVINE RANCH WATER DISTRICT

M. OSAMA ABDEL-AAL RCE NO. 34252 PROJECT MANAGER DATE
JIM MEYERHOFER RCE NO. 48451 PROJECT MANAGER DATE
PATRICIA UEMATSU RCE NO. 36762 PRINCIPAL ENGINEER DATE

IRVINE RANCH WATER DISTRICT
BAKER WATER TREATMENT PLANT
PROJECT NO. 11218

TREATMENT BUILDING
DETAIL - 16

DRAWING
S323
SHEET
247 OF 632

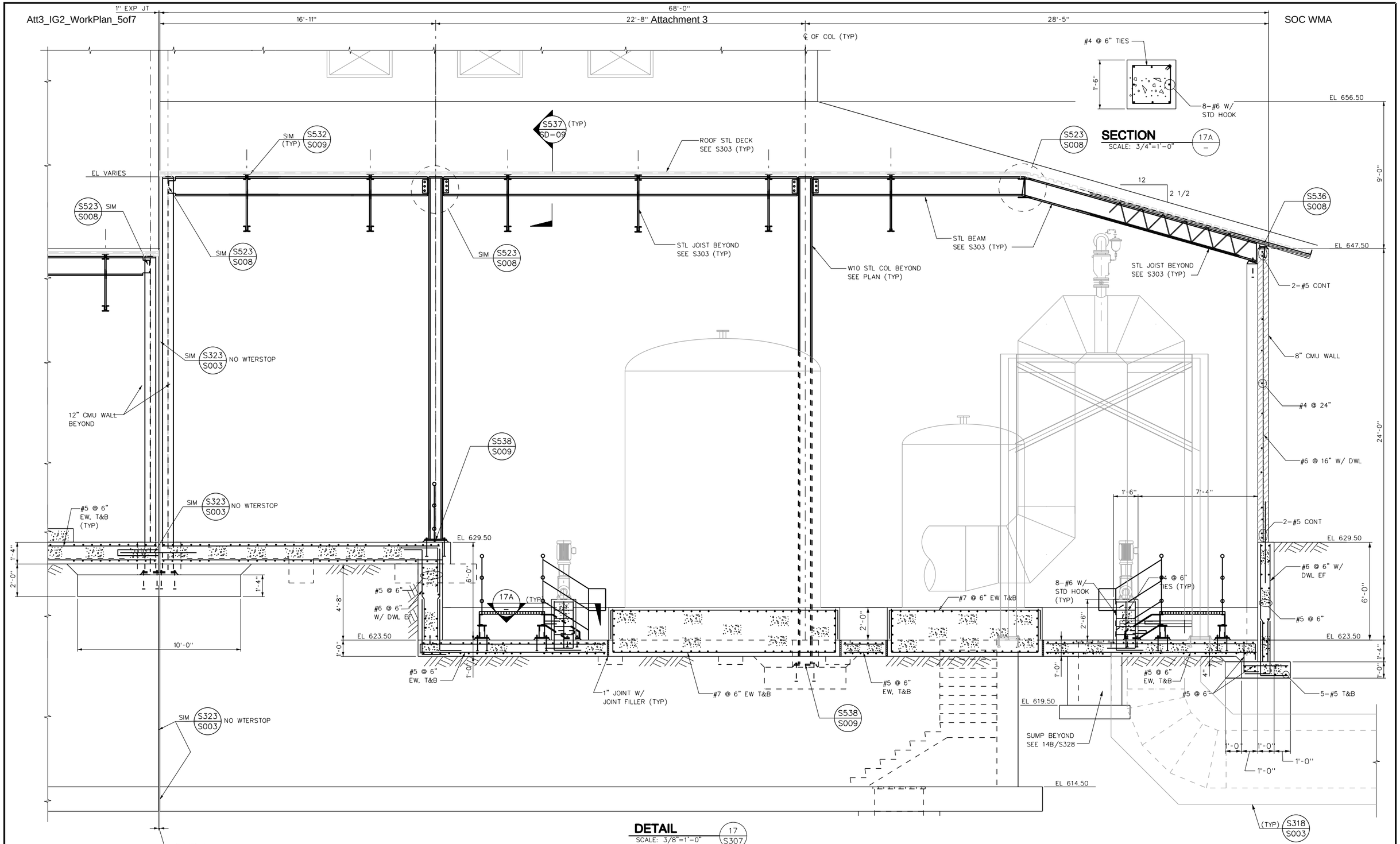

DETAIL 17 / S307
SCALE: 3/8"=1'-0"

No.	DATE	REVISIONS	APPROVED

DESIGNED: OAA
DRAWN: GMT
CHECKED: OAA

RBF CONSULTING
carollo
IRVINE RANCH WATER DISTRICT

M. OSAMA ABDEL-AAL RCE NO. 34252 PROJECT MANAGER DATE
JIM MEYERHOFER RCE NO. 48451 PROJECT MANAGER DATE
PATRICIA UEMATSU RCE NO. 36762 PRINCIPAL ENGINEER DATE

IRVINE RANCH WATER DISTRICT
BAKER WATER TREATMENT PLANT
PROJECT NO. 11218

TREATMENT BUILDING
DETAIL - 17

DRAWING
S324
SHEET

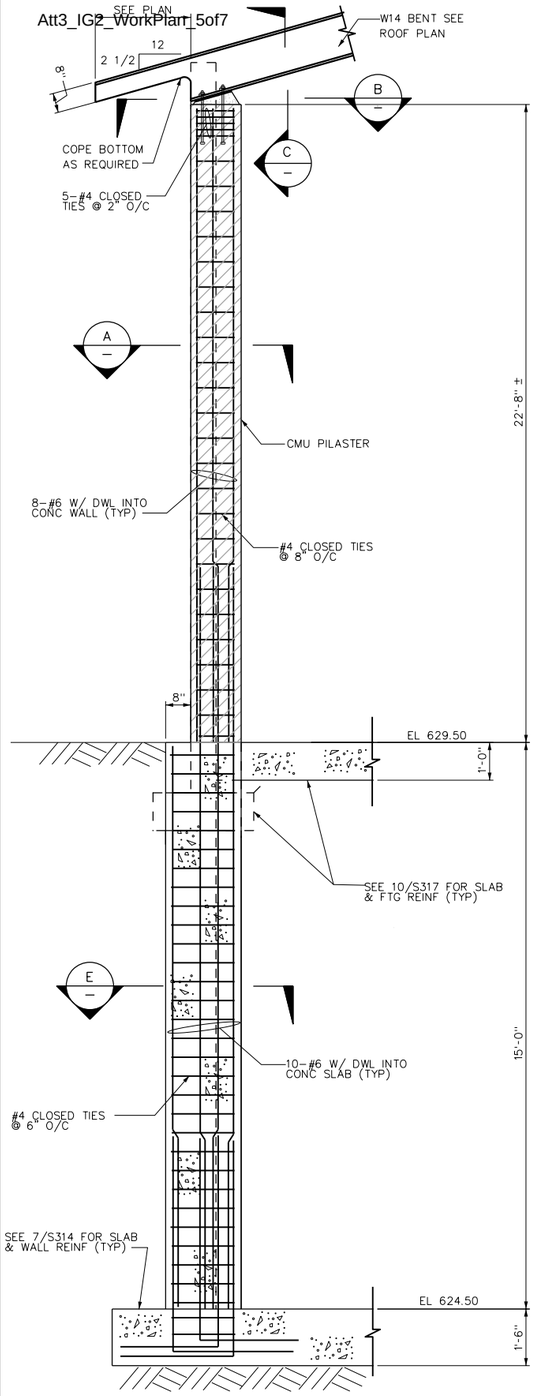

DETAIL 1 VAR
SCALE: 1/2"=1'-0"

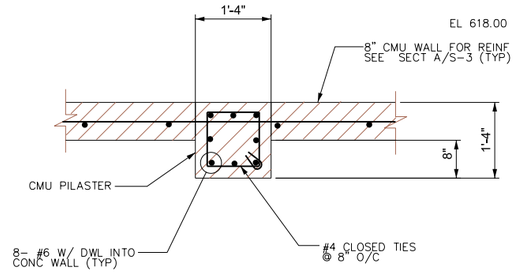

SECTION A
SCALE: 3/4"=1'-0"

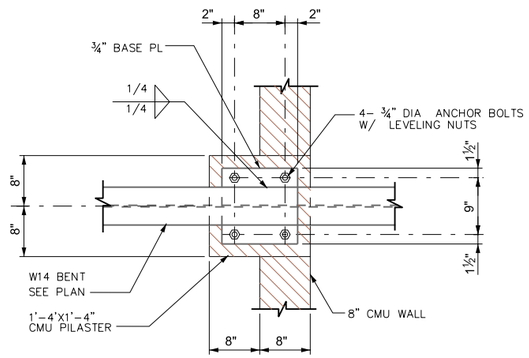

SECTION B
NO SCALE

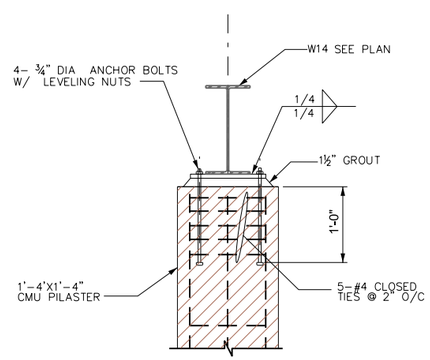

SECTION C
NO SCALE

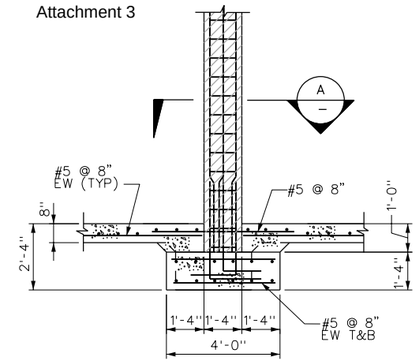

DETAIL D
SCALE: 3/4" = 1'-0"

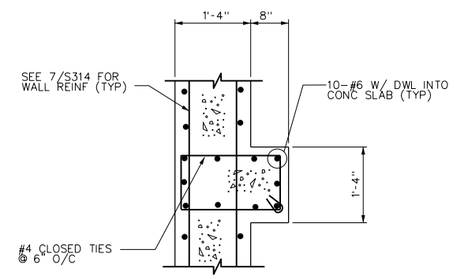

SECTION E
SCALE: 3/4"=1'-0"

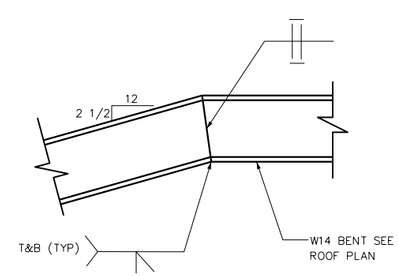

SECTION F
SCALE: 3/4"=1'-0"

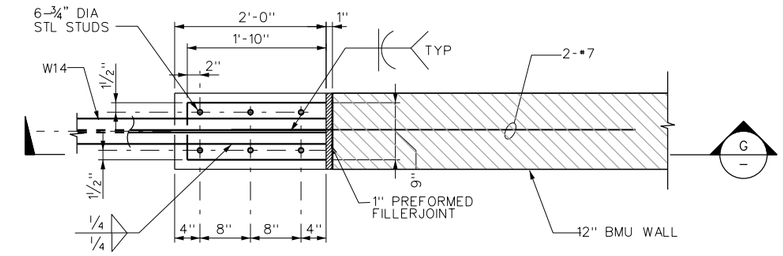

DETAIL 2 VAR
NO SCALE

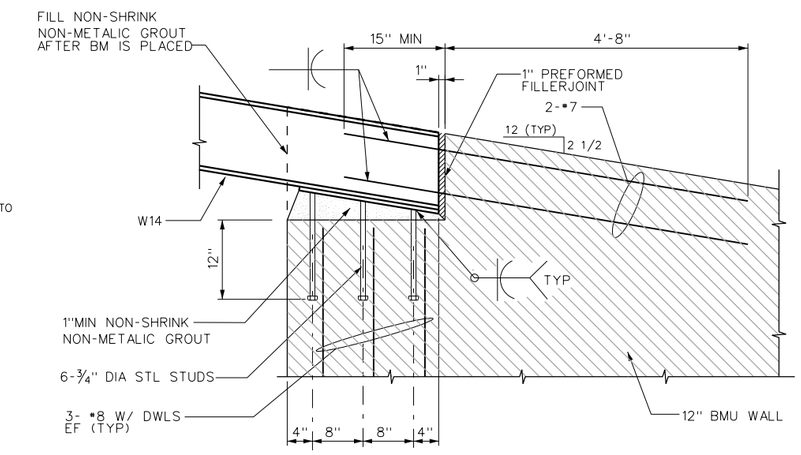

SECTION G S310,S311
NO SCALE

No.	DATE	REVISIONS	APPROVED

DESIGNED: OAA
DRAWN: GMT
CHECKED: OAA

RBF CONSULTING

carollo

IRVINE RANCH WATER DISTRICT

M. OSAMA ABDEL-AAL	RCE NO. 34252	PROJECT MANAGER	DATE
JIM MEYERHOFER	RCE NO. 48451	PROJECT MANAGER	DATE
PATRICIA UEMATSU	RCE NO. 36762	PRINCIPAL ENGINEER	DATE

IRVINE RANCH WATER DISTRICT
BAKER WATER TREATMENT PLANT
PROJECT NO. 11218

TREATMENT BUILDING MISCELLANEOUS DETAILS

DRAWING
S325
SHEET

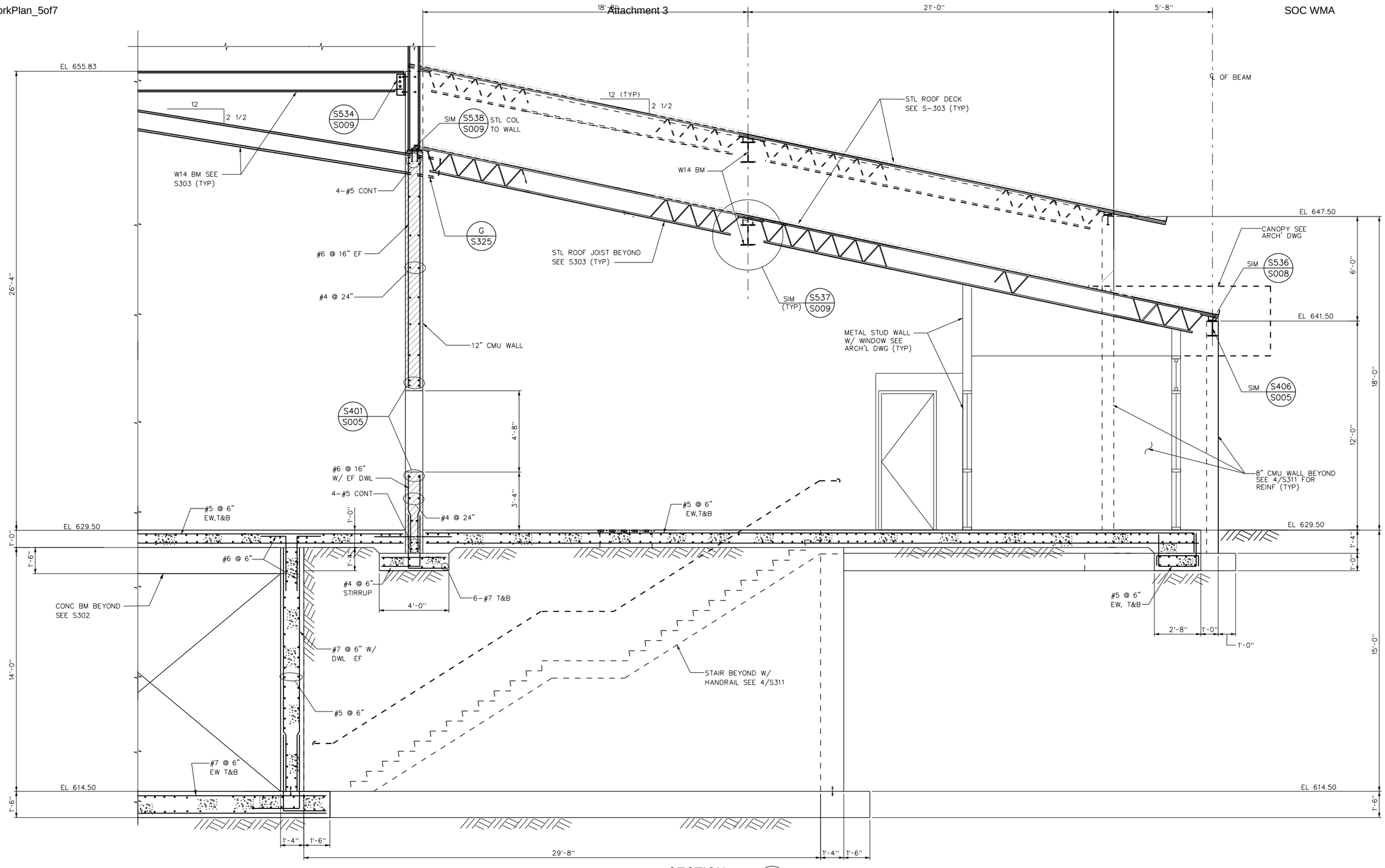

SECTION J S302 S303
SCALE: 3/8"=1'-0"

No.	DATE	REVISIONS	APPROVED

DESIGNED: OAA
DRAWN: GMT
CHECKED: OAA

RBF CONSULTING

carollo

IRVINE RANCH WATER DISTRICT

M. OSAMA ABDEL-AAL	RCE NO. 34252	PROJECT MANAGER	DATE
JIM MEYERHOFER	RCE NO. 48451	PROJECT MANAGER	DATE
PATRICIA UEMATSU	RCE NO. 36762	PRINCIPAL ENGINEER	DATE

IRVINE RANCH WATER DISTRICT
BAKER WATER TREATMENT PLANT
PROJECT NO. 11218

TREATMENT BUILDING
SECTION - J

DRAWING
S326
SHEET
250 OF 632

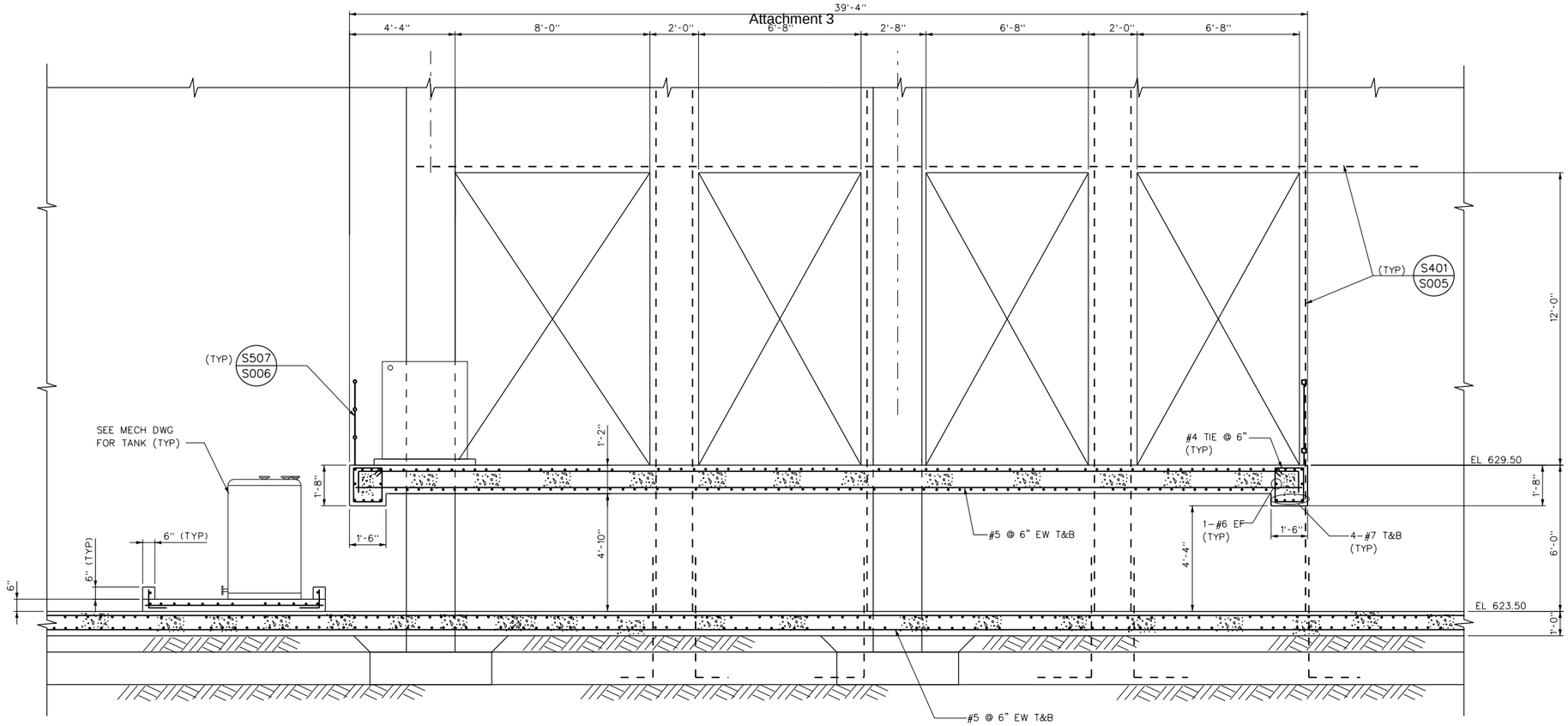

SECTION K S302
SCALE: 3/8"=1'-0"

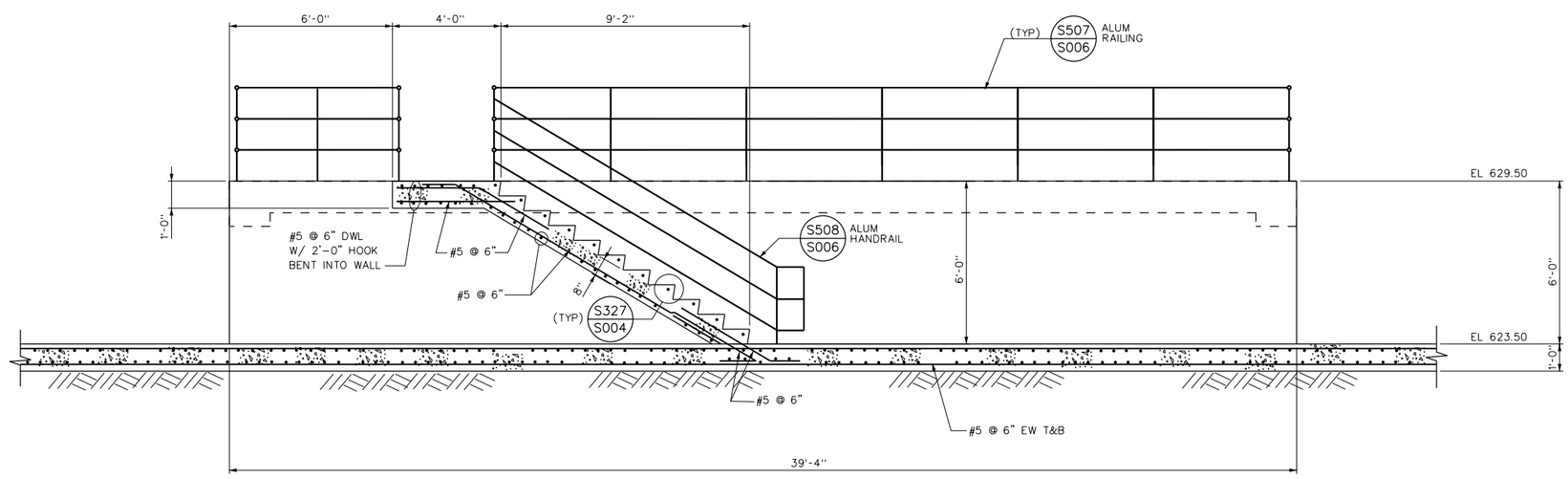

SECTION L S302
SCALE: 3/8"=1'-0"

No.	DATE	REVISIONS	APPROVED

DESIGNED: OAA
DRAWN: GMT
CHECKED: OAA

RBF CONSULTING
carollo
IRVINE RANCH WATER DISTRICT

M. OSAMA ABDEL-AAL RCE NO. 34252 PROJECT MANAGER DATE
JIM MEYERHOFER RCE NO. 48451 PROJECT MANAGER DATE
PATRICIA UEMATSU RCE NO. 36762 PRINCIPAL ENGINEER DATE

IRVINE RANCH WATER DISTRICT
BAKER WATER TREATMENT PLANT
PROJECT NO. 11218

TREATMENT BUILDING SECTION - K & L

DRAWING **S327**
SHEET **251** OF 632

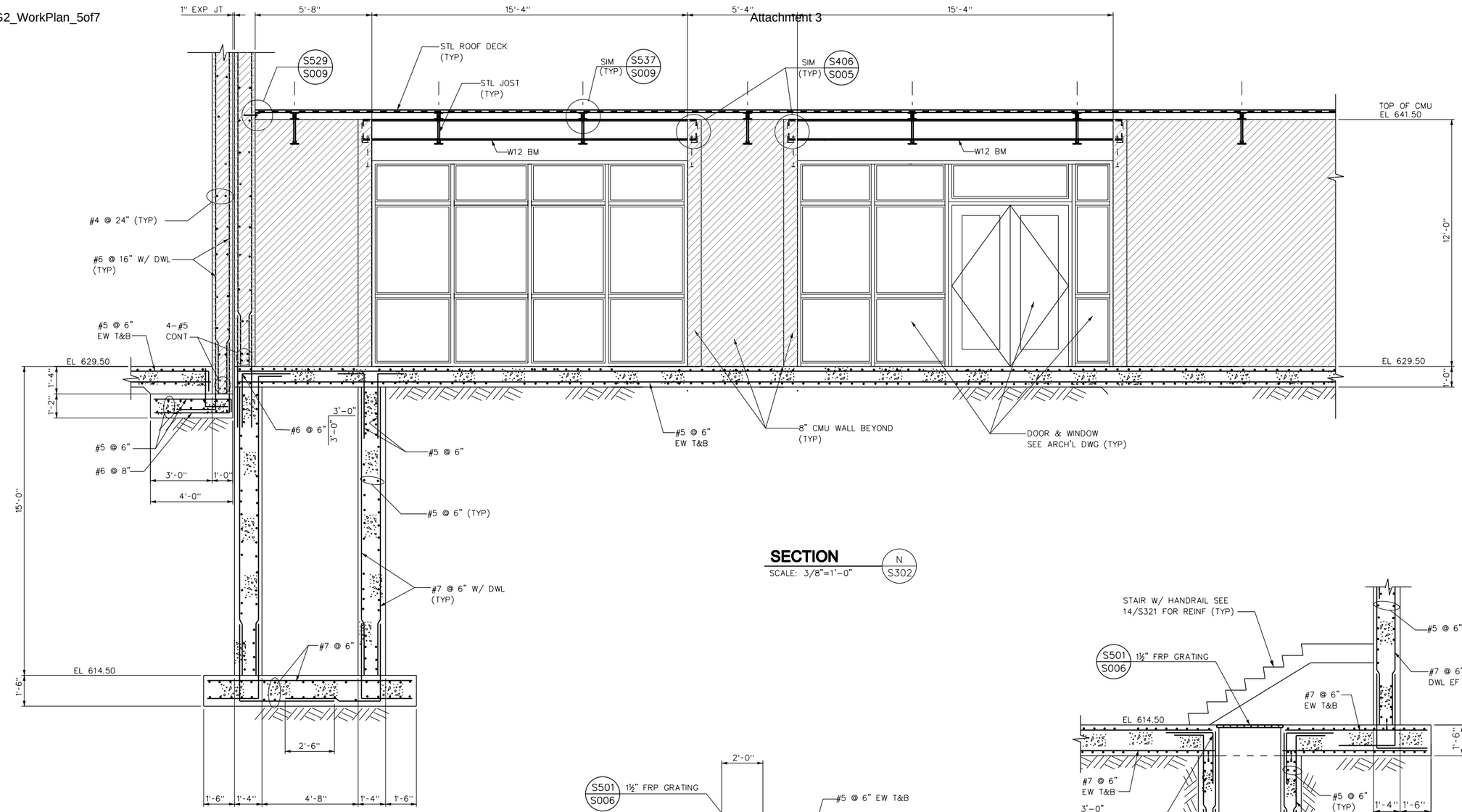

SECTION N / S302
SCALE: 3/8"=1'-0"

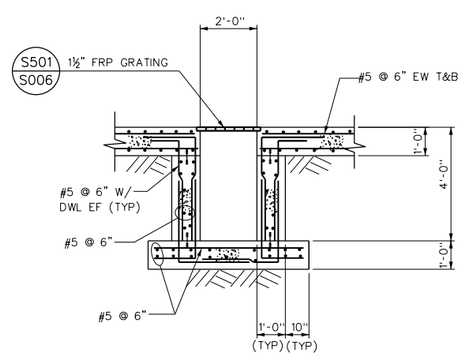

DETAIL 14B / S302 S324 S307
SCALE: 3/8"=1'-0"

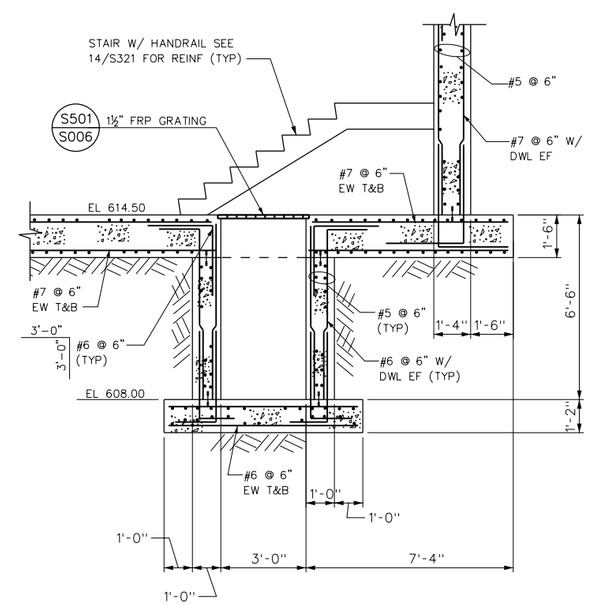

DETAIL 14A / S321 S307
SCALE: 3/8"=1'-0"

No.	DATE	REVISIONS	APPROVED

DESIGNED: OAA
DRAWN: GMT
CHECKED: OAA

RBF CONSULTING

carollo

IRVINE RANCH WATER DISTRICT

M. OSAMA ABDEL-AAL RCE NO. 34252 PROJECT MANAGER DATE
JIM MEYERHOFER RCE NO. 48451 PROJECT MANAGER DATE
PATRICIA UEMATSU RCE NO. 36762 PRINCIPAL ENGINEER DATE

IRVINE RANCH WATER DISTRICT
BAKER WATER TREATMENT PLANT
PROJECT NO. 11218

TREATMENT BUILDING SECTION & DETAILS

DRAWING
S328
SHEET
252 OF 632

NOTES:

1. COORDINATE ALL OPENING SIZES AND LOCATIONS WITH MECH DRAWINGS.

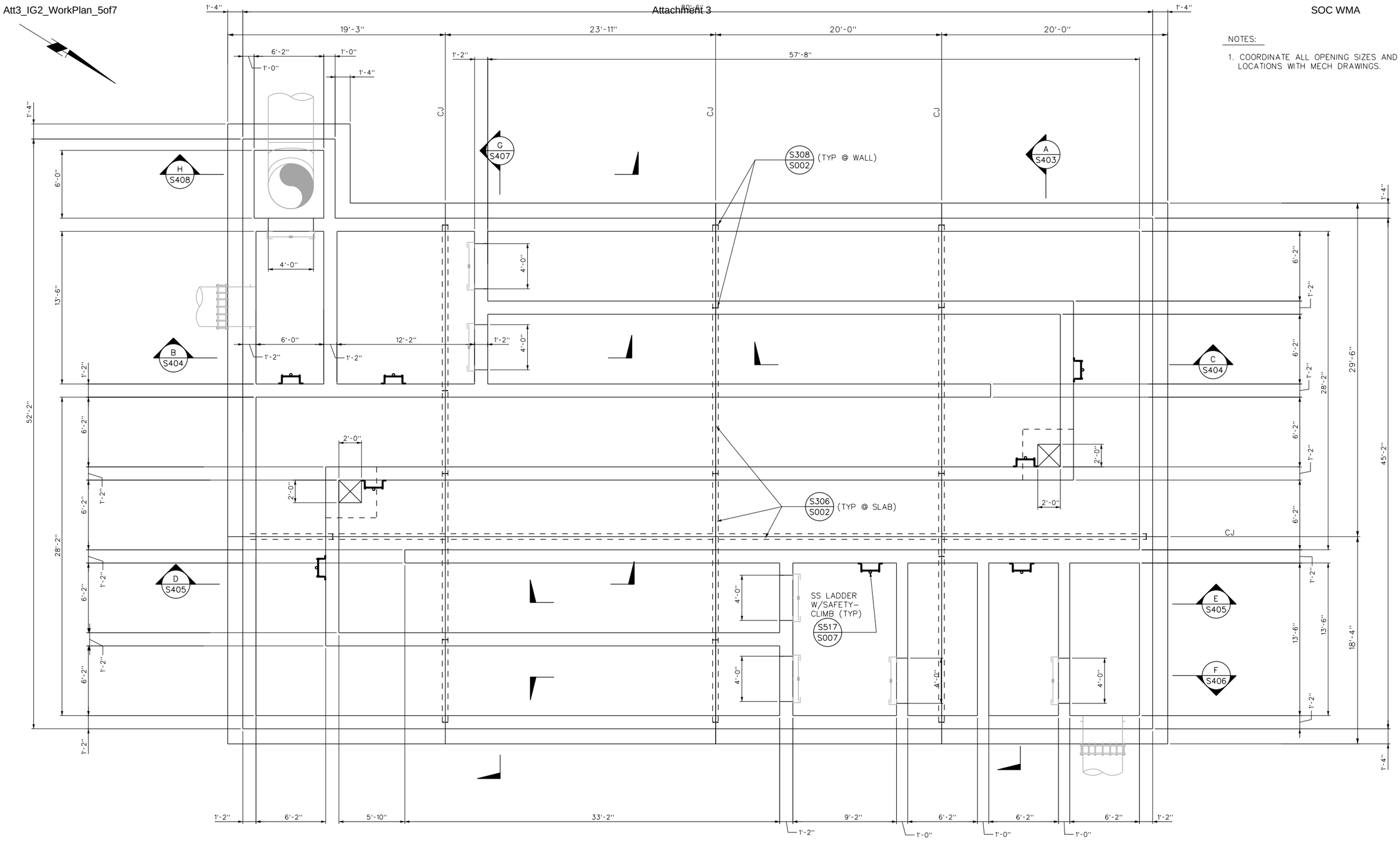

FOUNDATION PLAN

SCALE: 1/4" = 1'-0"

No.	DATE	REVISIONS	APPROVED

DESIGNED: OAA
DRAWN: GMT
CHECKED: OAA

RBF CONSULTING

carollo

IRVINE RANCH WATER DISTRICT

M. OSAMA ABDEL-AAL	RCE NO. 34252	PROJECT MANAGER	DATE
JIM MEYERHOFER	RCE NO. 48451	PROJECT MANAGER	DATE
PATRICIA UEMATSU	RCE NO. 36762	PRINCIPAL ENGINEER	DATE

IRVINE RANCH WATER DISTRICT
BAKER WATER TREATMENT PLANT
PROJECT NO. 11218

CT BASIN
FOUNDATION PLAN

DRAWING
S401
SHEET
253 OF 632

SOC WMA

NOTES:

1. COORDINATE W/ MECH DWGS FOR EQUIPMENT PADS LOCATIONS & SIZES.
2. COORDINATE W/ HVAC DWGS FOR EQUIPMENT & LOUVERS, SIZES & LOCATIONS.
3. COORDINATE W/ ARCH DWGS FOR DOORS, WINDOWS & STUD WALLS LOCATIONS.

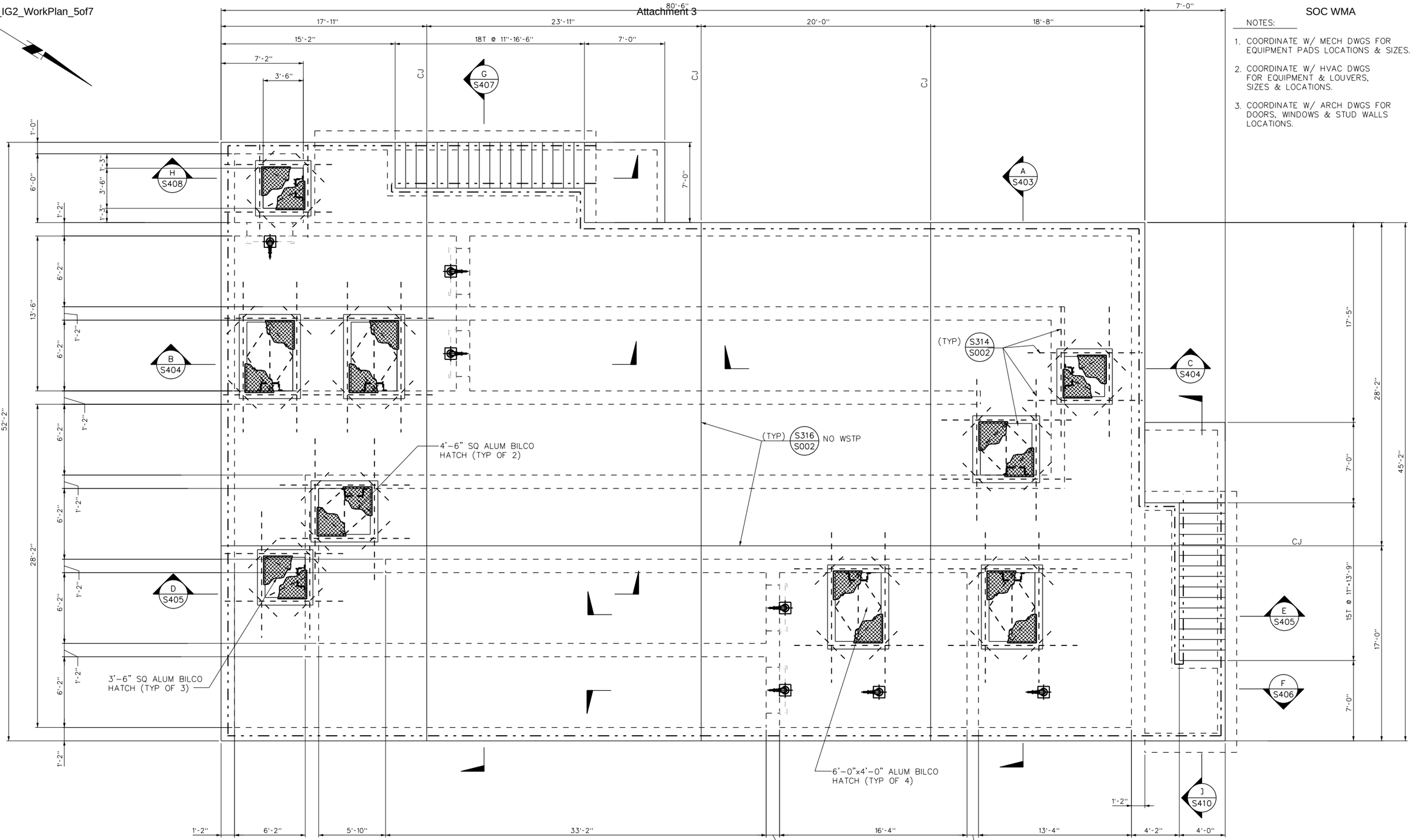

TOP PLAN

SCALE: 1/4" = 1'-0"

No.	DATE	REVISIONS	APPROVED

DESIGNED: OAA
DRAWN: GMT
CHECKED: OAA

RBF CONSULTING

carollo

IRVINE RANCH WATER DISTRICT

M. OSAMA ABDEL-AAL RCE NO. 34252 PROJECT MANAGER DATE
JIM MEYERHOFER RCE NO. 48451 PROJECT MANAGER DATE
PATRICIA UEMATSU RCE NO. 36762 PRINCIPAL ENGINEER DATE

IRVINE RANCH WATER DISTRICT
BAKER WATER TREATMENT PLANT
PROJECT NO. 11218

CT BASIN
TOP PLAN

DRAWING S402

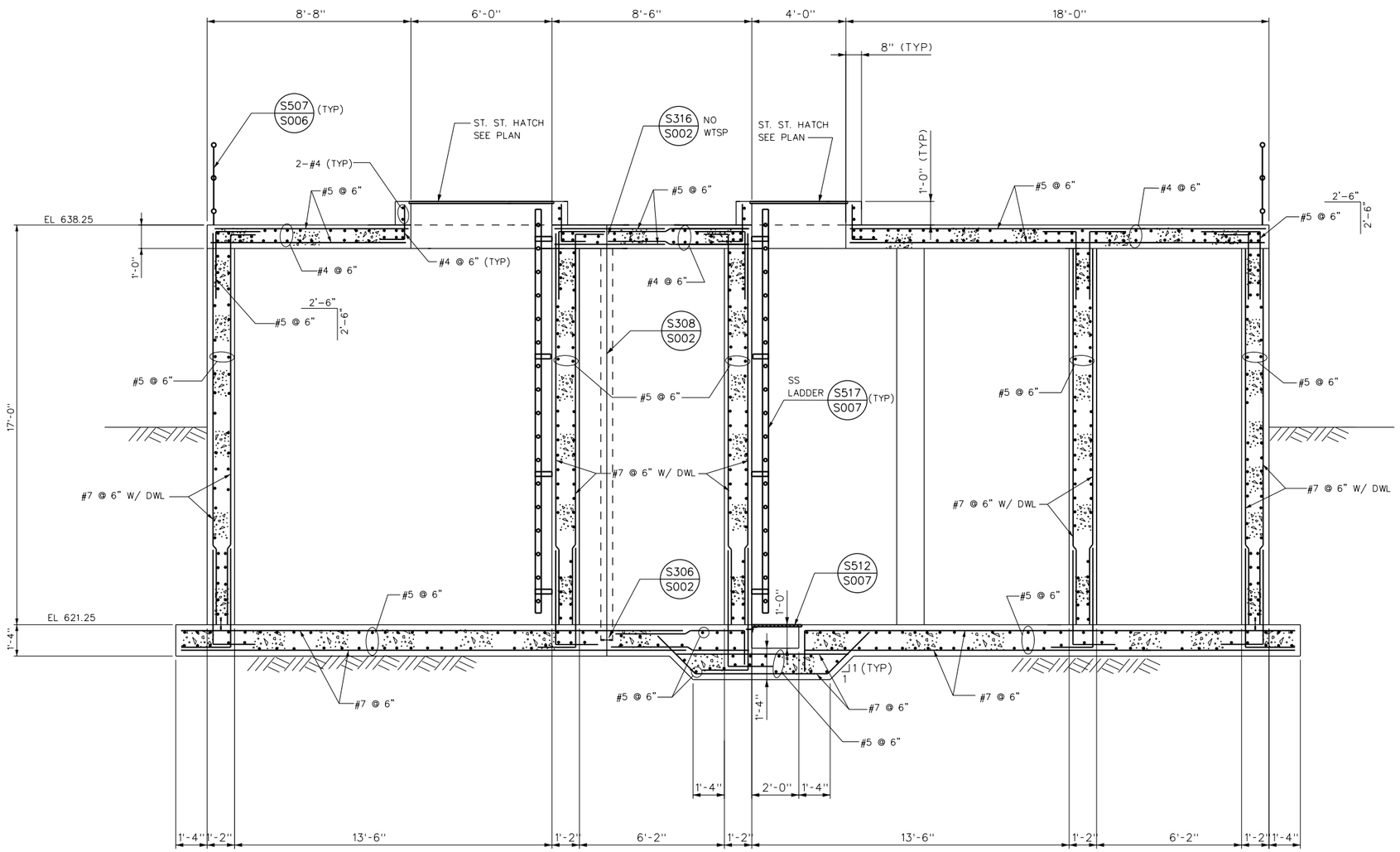

SECTION A S401 / S402

SCALE: 3/8" = 1'-0"

No.	DATE	REVISIONS	APPROVED

DESIGNED: OAA
DRAWN: GMT
CHECKED: OAA

RBF CONSULTING

carollo

IRVINE RANCH WATER DISTRICT

M. OSAMA ABDEL-AAL RCE NO. 34252 PROJECT MANAGER DATE
JIM MEYERHOFER RCE NO. 48451 PROJECT MANAGER DATE
PATRICIA UEMATSU RCE NO. 36762 PRINCIPAL ENGINEER DATE

IRVINE RANCH WATER DISTRICT
BAKER WATER TREATMENT PLANT
PROJECT NO. 11218

CT BASIN
SECTION - A

DRAWING S403

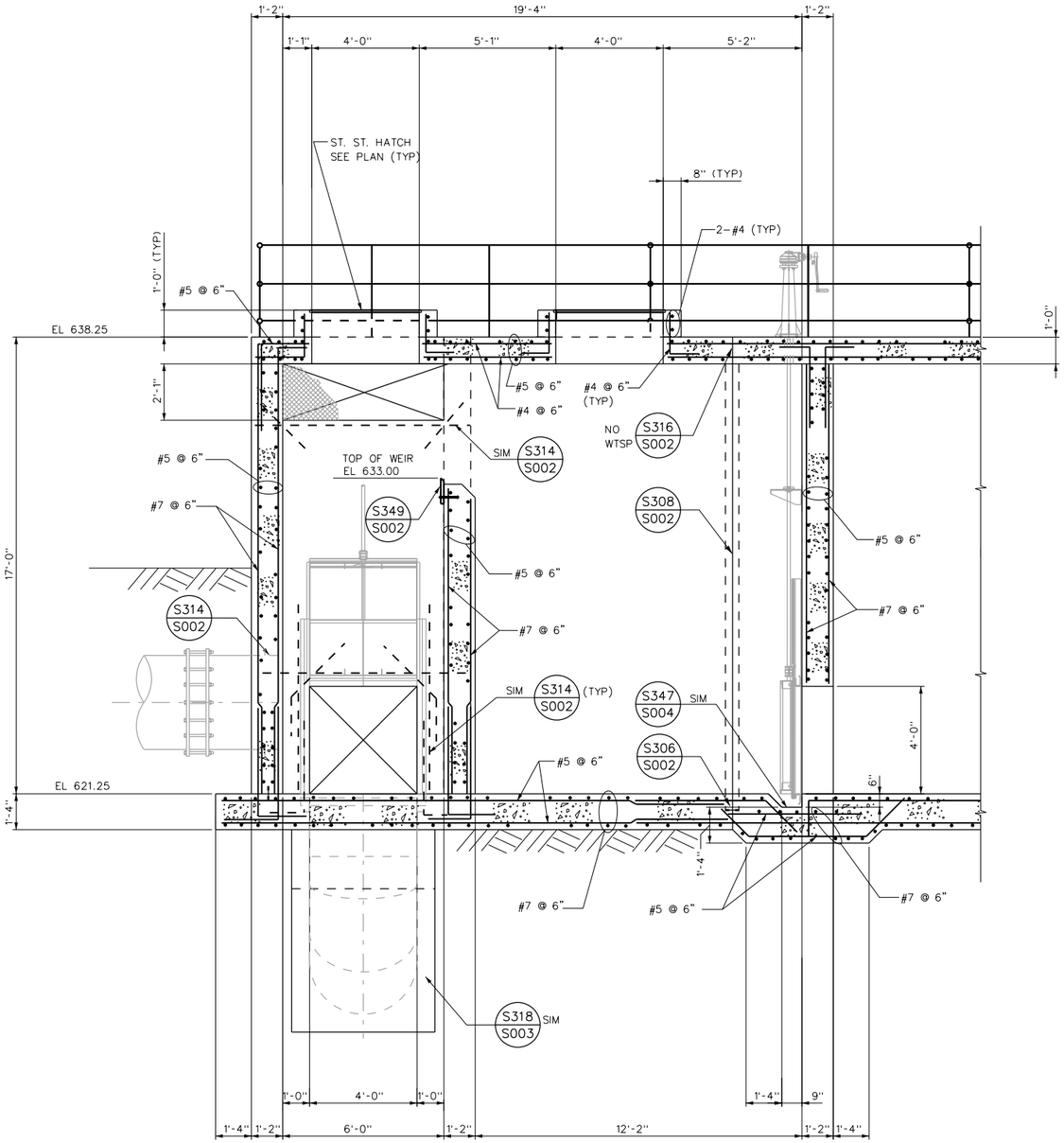

SECTION B S401 / S402
SCALE: 3/8" = 1'-0"

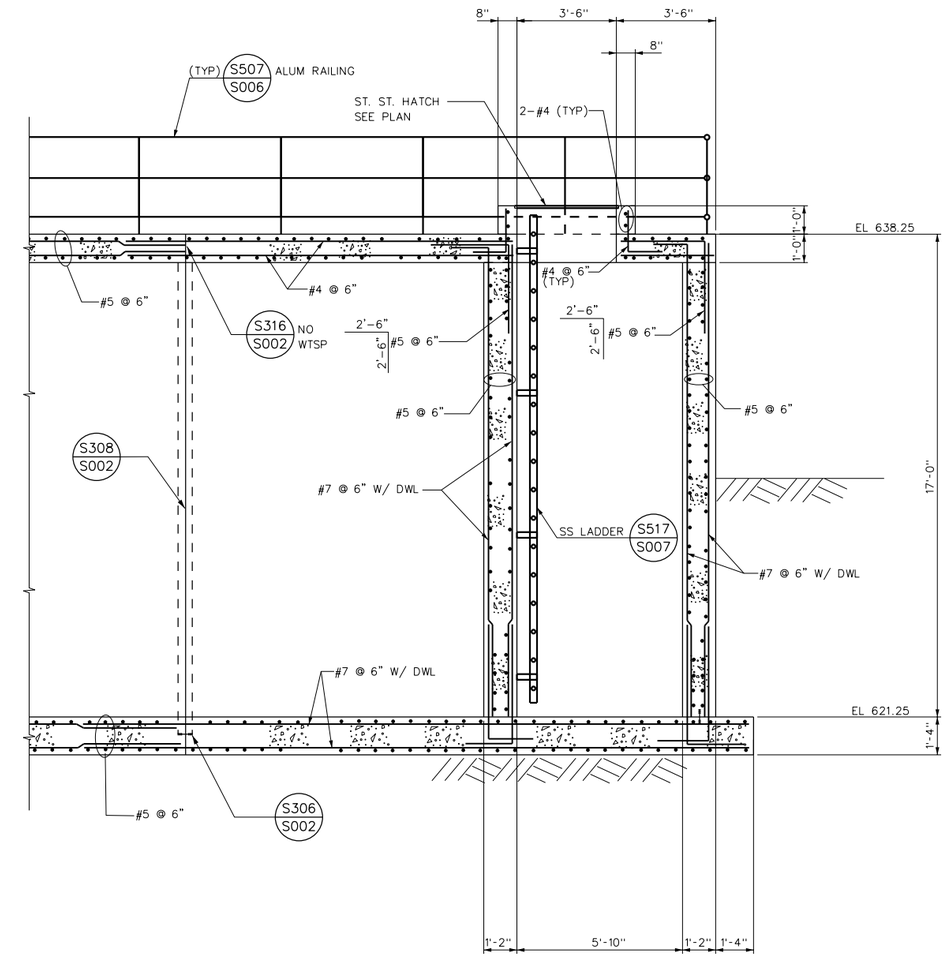

SECTION C S401 / S402
SCALE: 3/8" = 1'-0"

No.	DATE	REVISIONS	APPROVED

DESIGNED: OAA
DRAWN: GMT
CHECKED: OAA

RBF CONSULTING

carollo

IRVINE RANCH WATER DISTRICT

M. OSAMA ABDEL-AAL RCE NO. 34252 PROJECT MANAGER DATE
JIM MEYERHOFER RCE NO. 48451 PROJECT MANAGER DATE
PATRICIA UEMATSU RCE NO. 36762 PRINCIPAL ENGINEER DATE

IRVINE RANCH WATER DISTRICT
BAKER WATER TREATMENT PLANT
PROJECT NO. 11218

CT BASIN
SECTION - B & C

DRAWING
S404
SHEET
256 OF 632

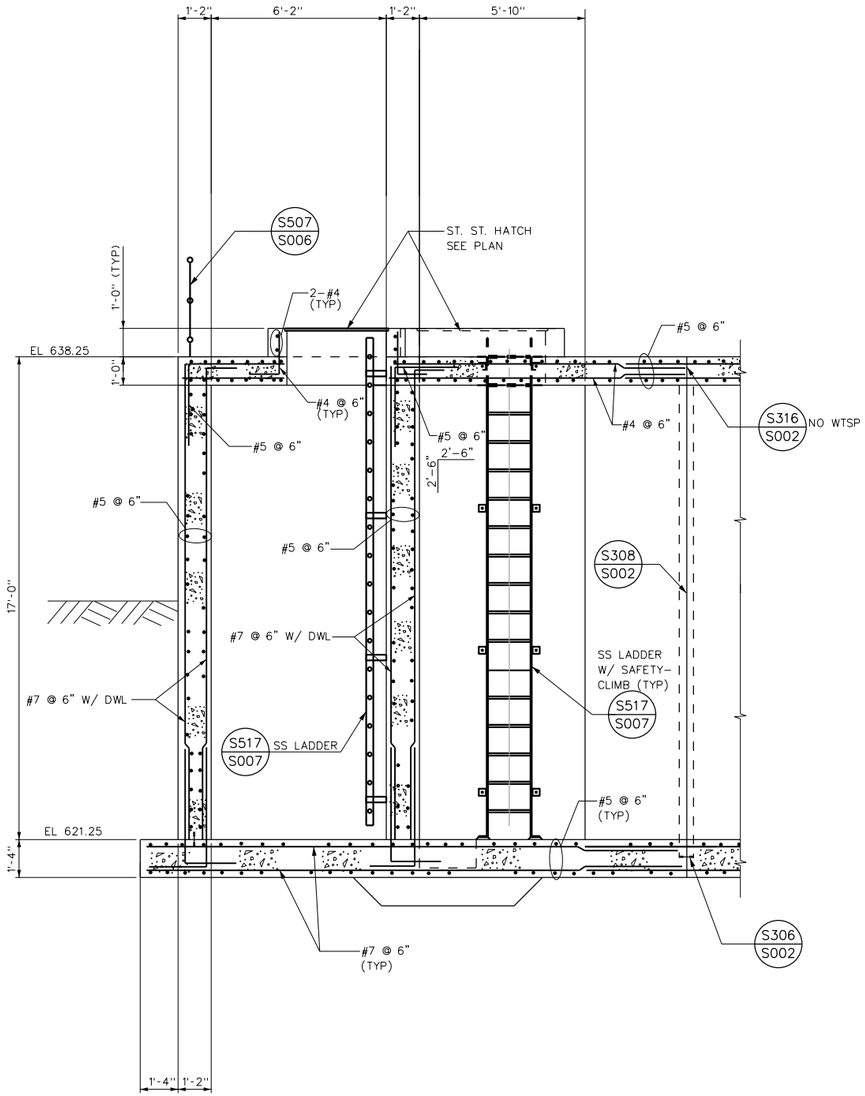

SECTION D S401 S402
SCALE: 3/8" = 1'-0"

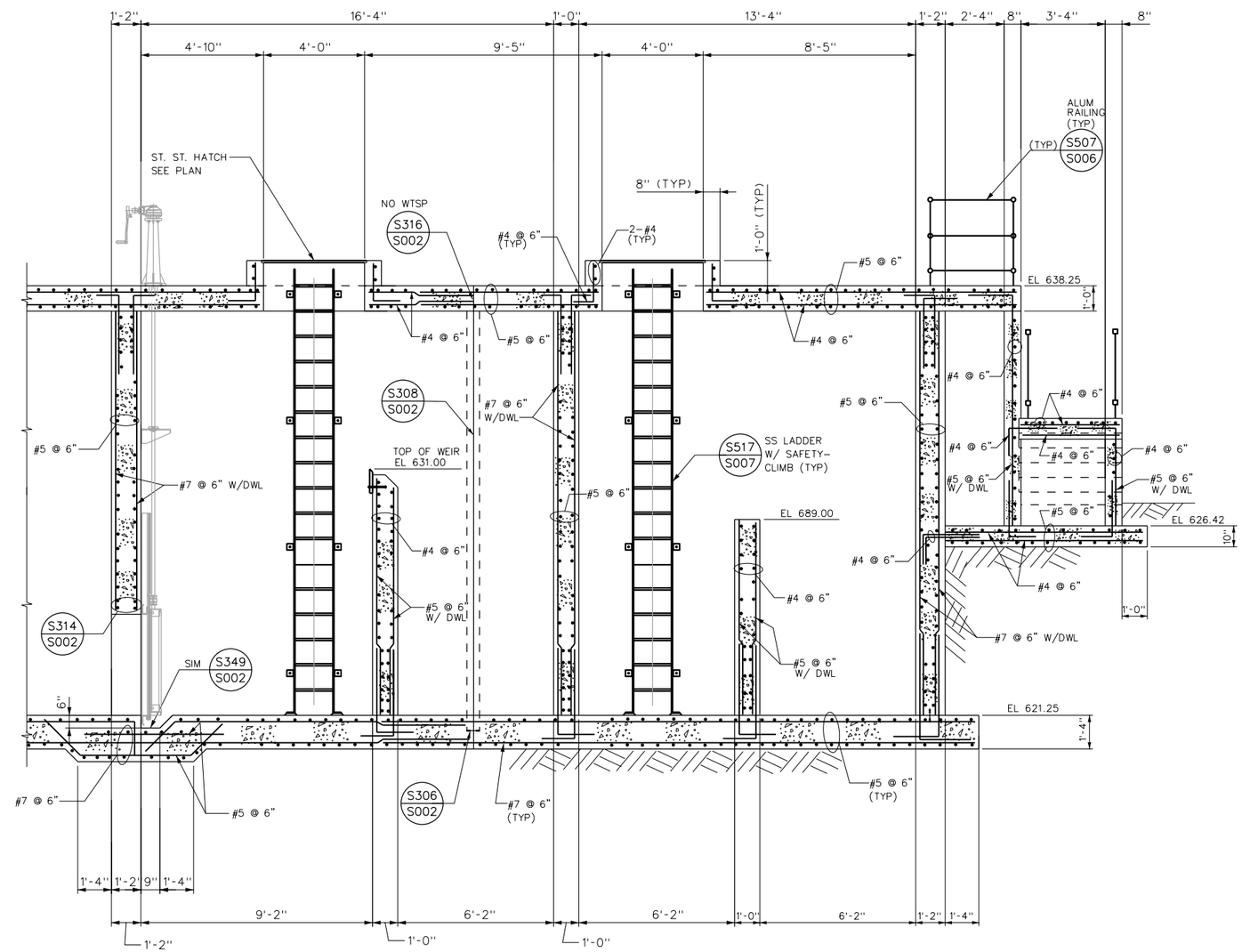

SECTION E S401 S402
SCALE: 3/8" = 1'-0"

No.	DATE	REVISIONS	APPROVED

DESIGNED: OAA
DRAWN: GMT
CHECKED: OAA

RBF CONSULTING

carollo

IRVINE RANCH WATER DISTRICT

M. OSAMA ABDEL-AAL RCE NO. 34252 PROJECT MANAGER DATE
JIM MEYERHOFER RCE NO. 48451 PROJECT MANAGER DATE
PATRICIA UEMATSU RCE NO. 36762 PRINCIPAL ENGINEER DATE

IRVINE RANCH WATER DISTRICT
BAKER WATER TREATMENT PLANT
PROJECT NO. 11218

CT BASIN
SECTION - D & E

DRAWING
S405
SHEET
257 OF 632

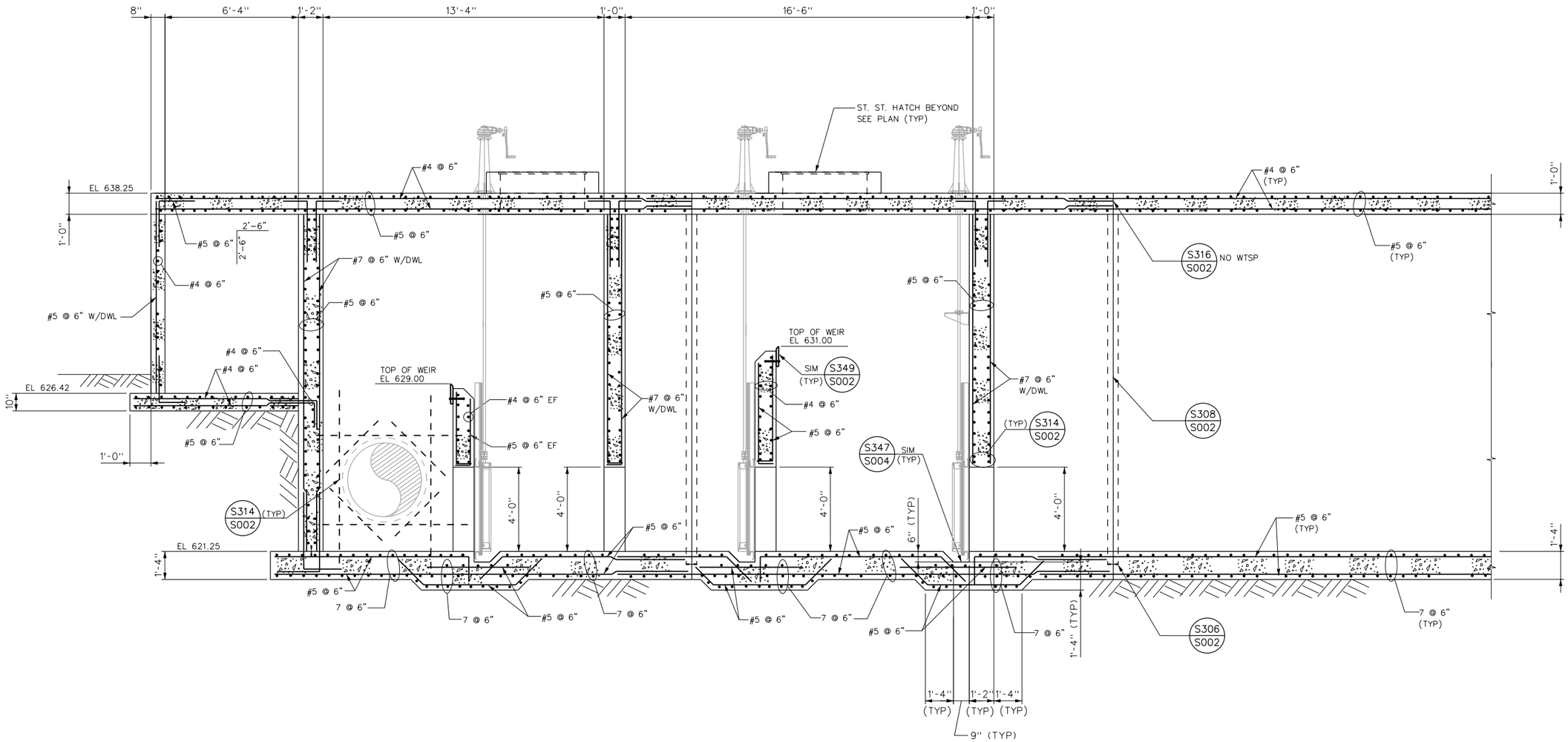

SECTION F S401 S402
SCALE: 3/8" = 1'-0"

No.	DATE	REVISIONS	APPROVED

DESIGNED: OAA
DRAWN: GMT
CHECKED: OAA

RBF CONSULTING

carollo

IRVINE RANCH WATER DISTRICT

M. OSAMA ABDEL-AAL RCE NO. 34252 PROJECT MANAGER DATE
JIM MEYERHOFER RCE NO. 48451 PROJECT MANAGER DATE
PATRICIA UEMATSU RCE NO. 36762 PRINCIPAL ENGINEER DATE

IRVINE RANCH WATER DISTRICT
BAKER WATER TREATMENT PLANT
PROJECT NO. 11218

CT BASIN
SECTION - F

DRAWING
S406
SHEET
258 OF 632

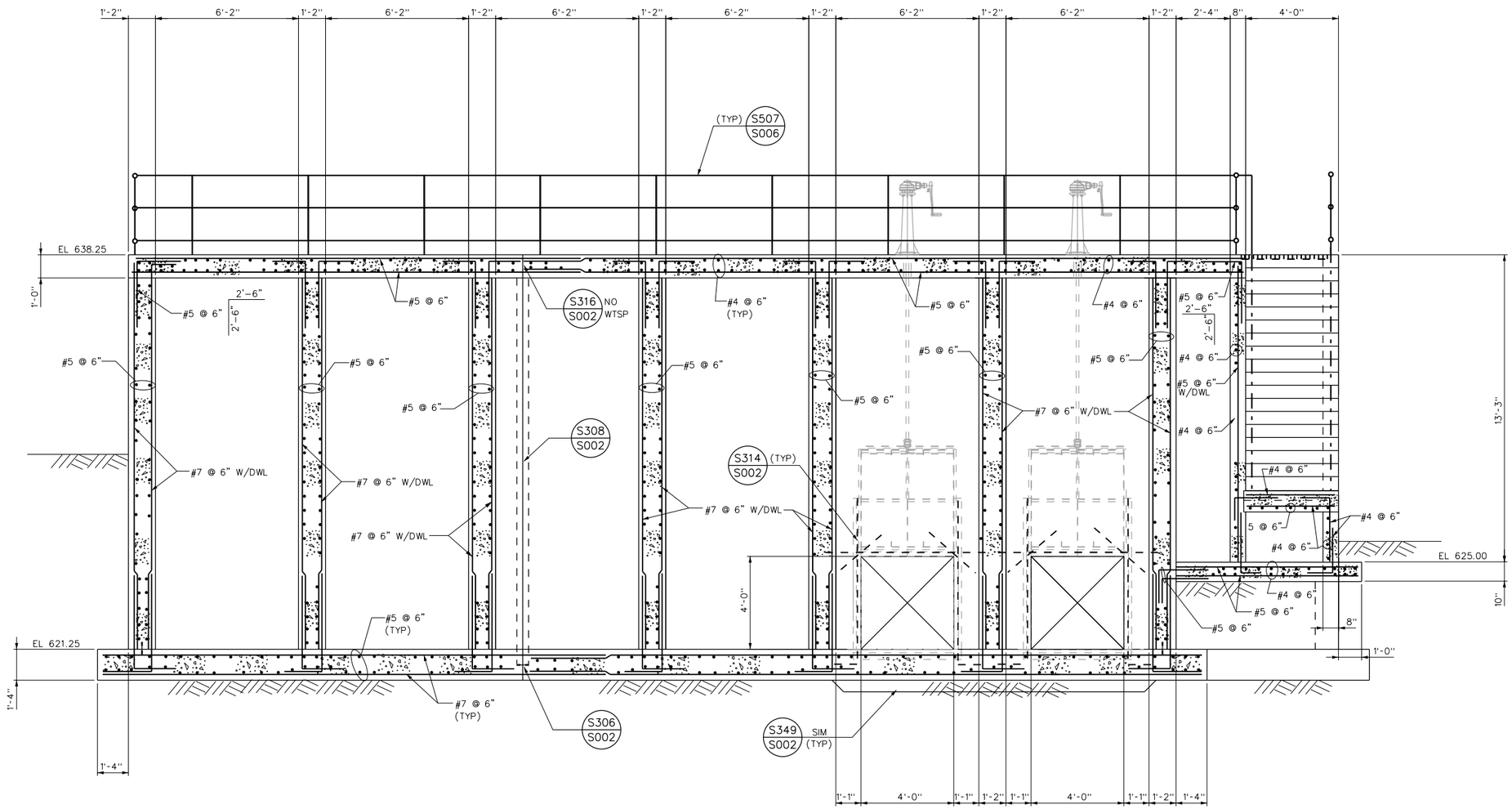

SECTION G S401 S402
SCALE: 3/8" = 1'-0"

No.	DATE	REVISIONS	APPROVED

DESIGNED: OAA
DRAWN: GMT
CHECKED: OAA

RBF CONSULTING

carollo

IRVINE RANCH WATER DISTRICT

M. OSAMA ABDEL-AAL RCE NO. 34252 PROJECT MANAGER DATE
JIM MEYERHOFER RCE NO. 48451 PROJECT MANAGER DATE
PATRICIA UEMATSU RCE NO. 36762 PRINCIPAL ENGINEER DATE

IRVINE RANCH WATER DISTRICT
BAKER WATER TREATMENT PLANT
PROJECT NO. 11218

CT BASIN
SECTION - G

DRAWING S407
SHEET 259 OF 632

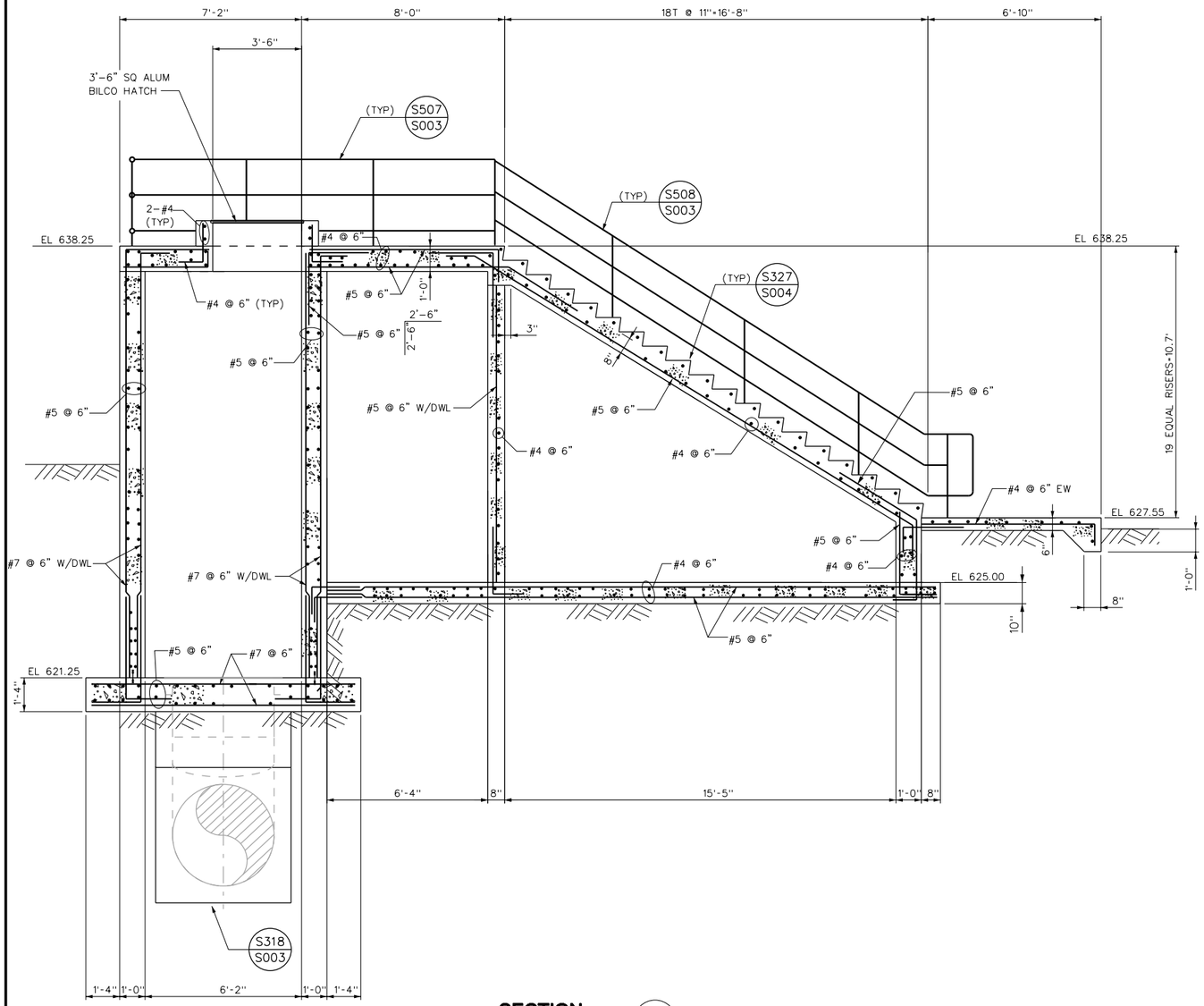

SECTION H S401 S402
SCALE: 3/8"=1'-0"

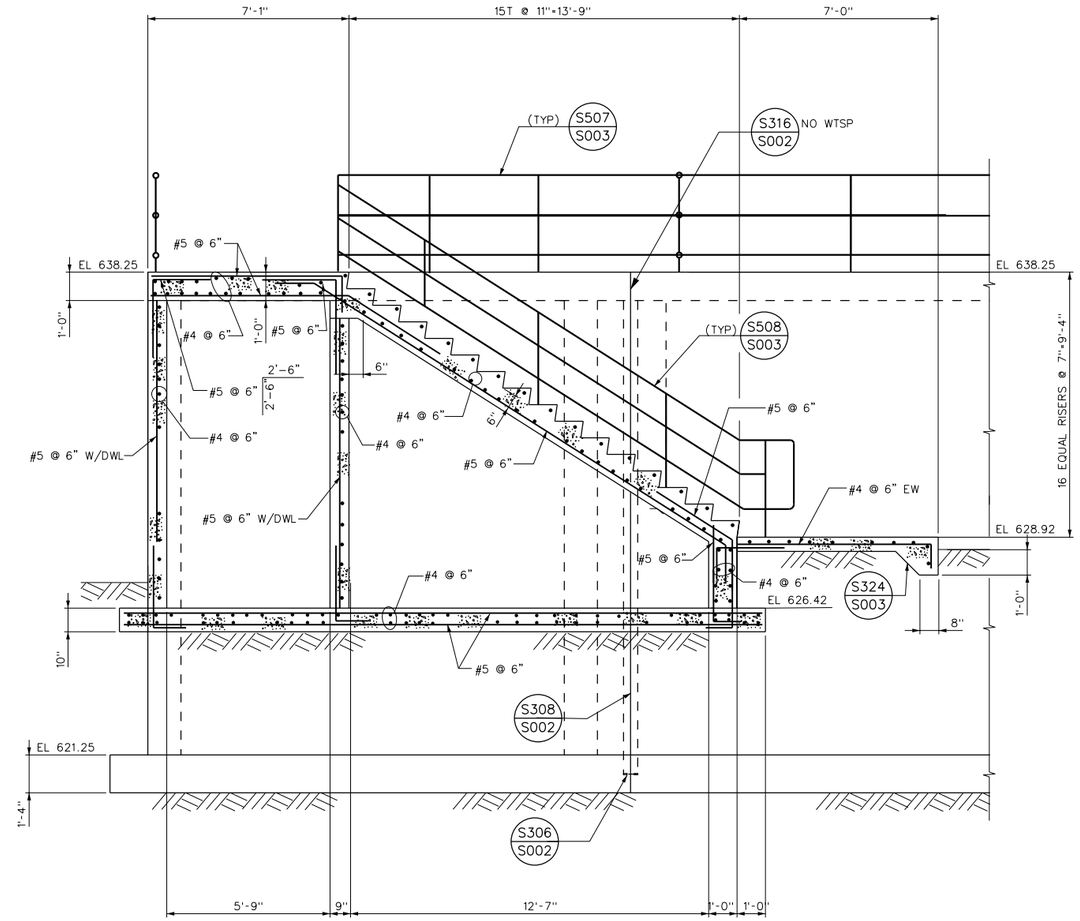

SECTION J S402
SCALE: 3/8"=1'-0"

No.	DATE	REVISIONS	APPROVED

DESIGNED: OAA
DRAWN: GMT
CHECKED: OAA

RBF CONSULTING
carollo
IRVINE RANCH WATER DISTRICT

M. OSAMA ABDEL-AAL RCE NO. 34252 PROJECT MANAGER DATE
JIM MEYERHOFER RCE NO. 48451 PROJECT MANAGER DATE
PATRICIA UEMATSU RCE NO. 36762 PRINCIPAL ENGINEER DATE

IRVINE RANCH WATER DISTRICT
BAKER WATER TREATMENT PLANT
PROJECT NO. 11218

CT BASIN
SECTION - H & I

DRAWING **S408**
SHEET **260** OF 632

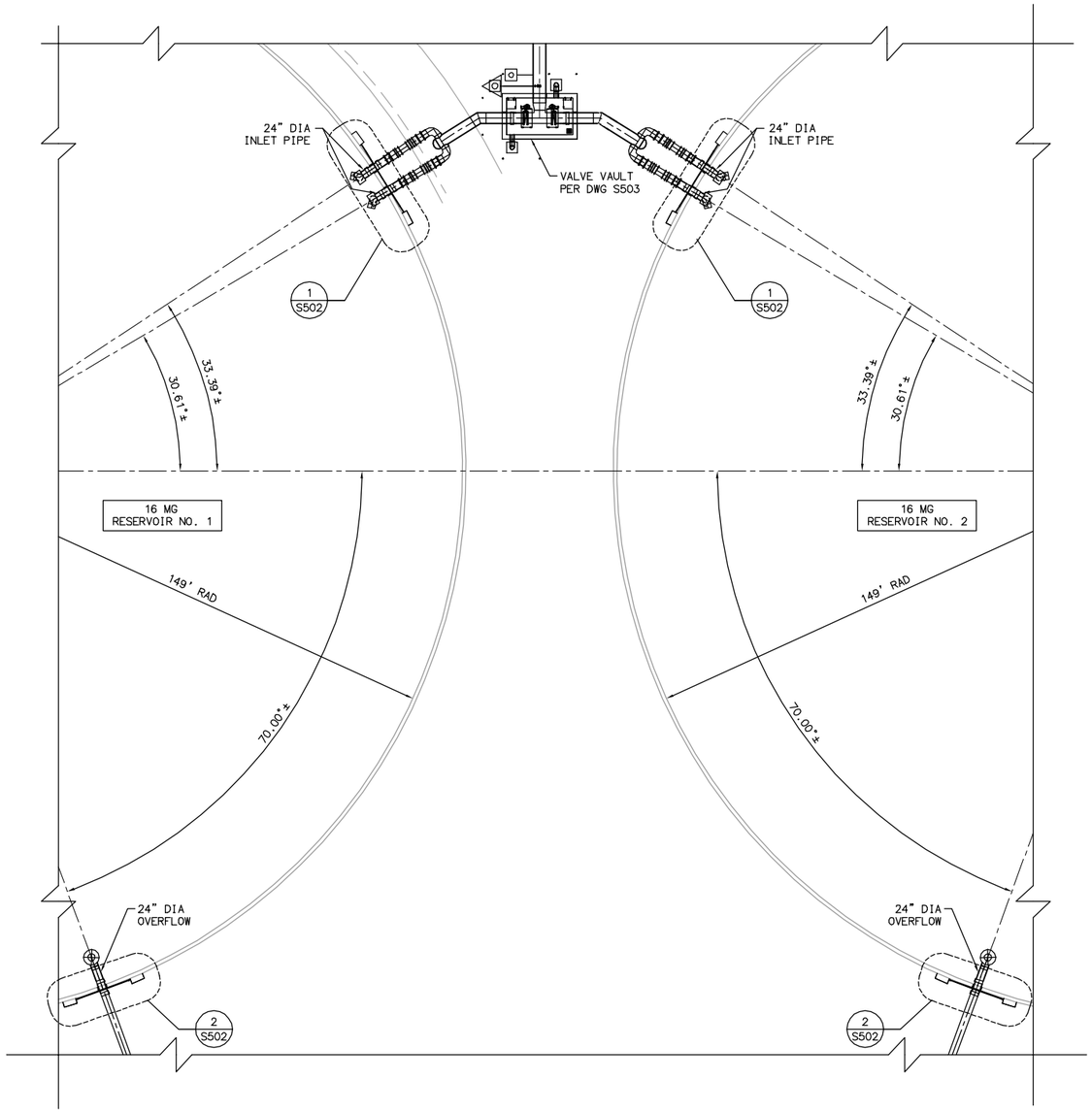

INLET PIPING MODIFICATIONS - PLAN

SCALE: 1" = 20'

NOTES:

1. SEE DRAWING M500 FOR NORTHING/EASTING COORDINATES FOR TANK AND VALVE VAULT LOCATION AND RELATIVE LOCATION OF INLET/OVERFLOW PIPING.
2. PIPE PENETRATION LOCATION AT WALL IS APPROXIMATE AND SUBJECT TO CHANGE BASED ON EXACT LOCATION OF VERTICAL TENDONS IN THE TANK WALLS.
3. PIPING ORIENTATION IN THE VALVE VAULT SHALL BE ADJUSTED AFTER DETERMINATION OF INLET PIPING LOCATION IN THE WALL.
4. LOCATION OF VERTICAL TENDONS SHALL BE CLEARLY MARKED ON THE ROOF EDGE AND WALLS ALONG THE INLET/OVERFLOW PIPES WORK AREA PRIOR TO ANY CORING OPERATION.

LAST SAVED BY: csteleo LAST UPDATED: 01/20/2012 11:39 AM FILENAME: 6232-S501.dwg

No.	DATE	REVISIONS	APPROVED

DESIGNED: SMS
DRAWN: CS
CHECKED: SMS

RBF CONSULTING

carollo

IRVINE RANCH WATER DISTRICT

SALAHUDDIN M. SHEIKH RCE NO. 32677 STRUCTURAL ENGINEER DATE
CINDY MILLER RCE NO. 58116 PROJECT MANAGER DATE
PATRICIA UEMATSU RCE NO. 36762 PRINCIPAL ENGINEER DATE

IRVINE RANCH WATER DISTRICT
BAKER WATER TREATMENT PLANT
PROJECT NO. 11218

PRODUCT WATER CLEARWELLS INLET PIPING MODIFICATIONS PLAN AND NOTES

DRAWING
S501
SHEET

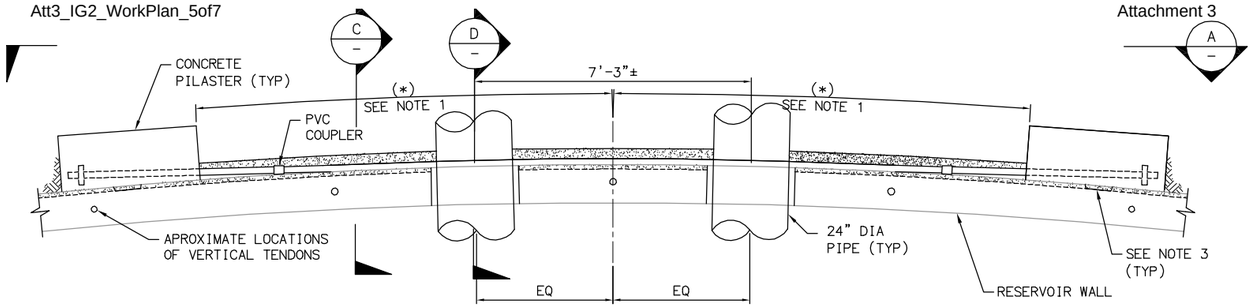

INLET PIPE PENETRATION DETAIL (1 / S501)

SCALE: 3/8" = 1'-0"

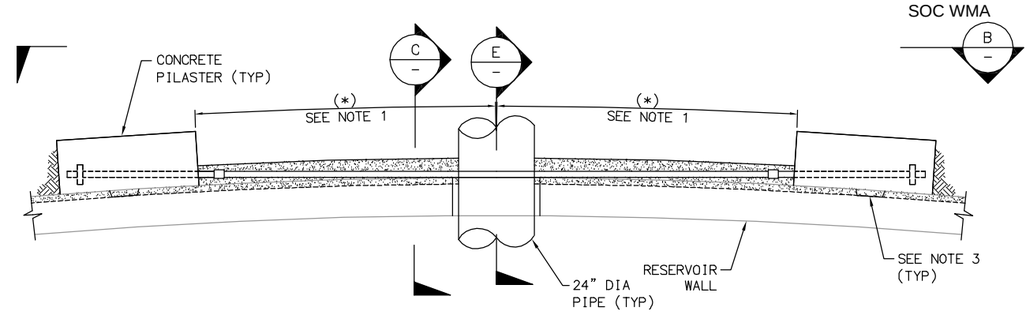

OVERFLOW PIPE PENETRATION DETAIL (2 / S501)

SCALE: 3/8" = 1'-0"

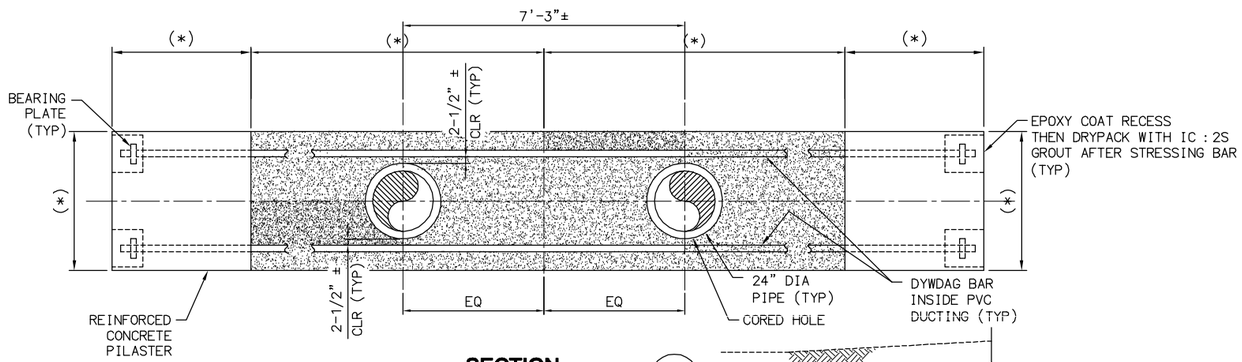

SECTION (A)

SCALE: 3/8" = 1'-0"

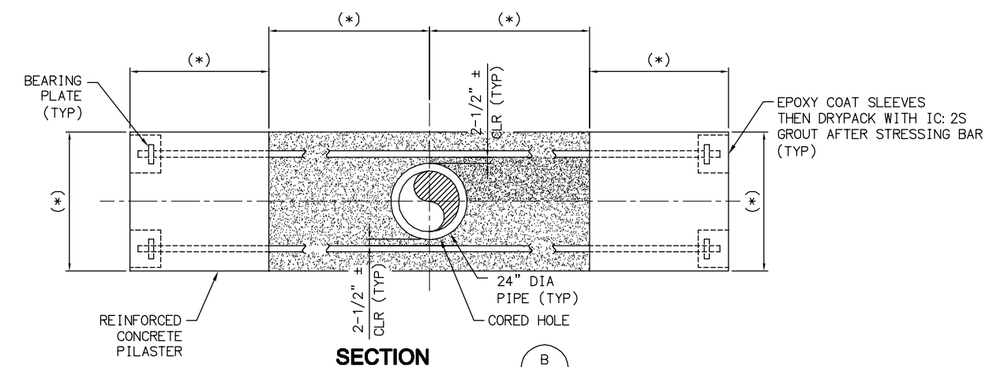

SECTION (B)

SCALE: 3/8" = 1'-0"

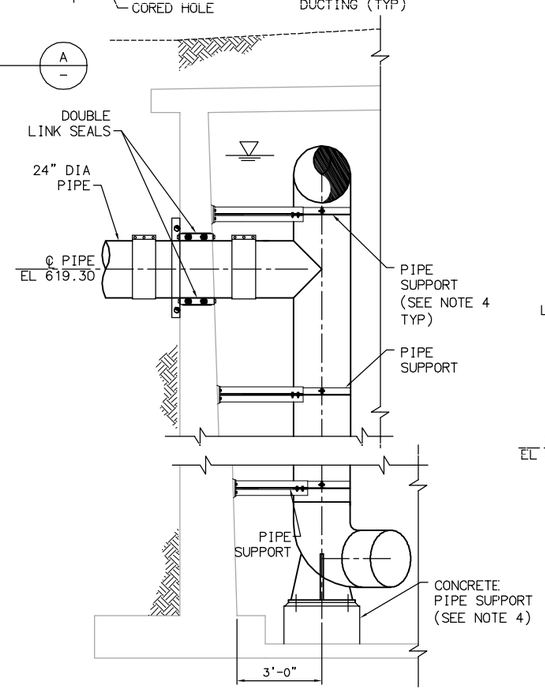

SECTION (D)

SCALE: 3/8" = 1'-0"

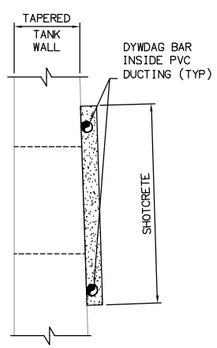

SECTION (C)

SCALE: 3/4" = 1'-0"

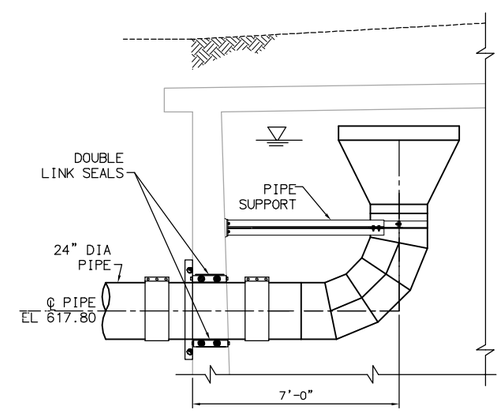

SECTION (E)

SCALE: 3/8" = 1'-0"

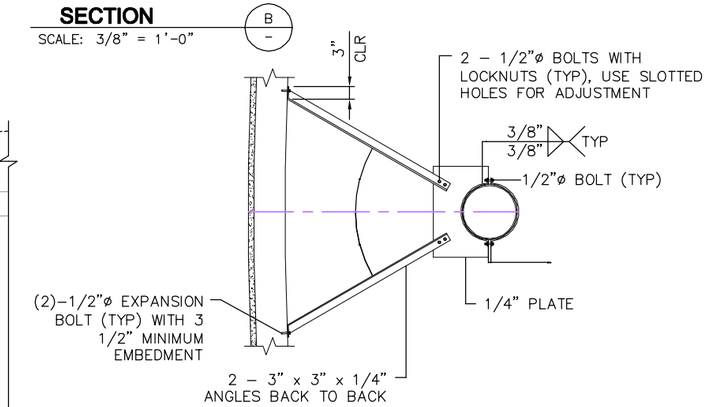

TYPICAL PIPE SUPPORT DETAIL (3)

NTS

NOTES:

1. DIMENSIONS MARKED WITH (*) SHALL BE DETERMINED BY THE CONTRACTOR.
2. PILASTER REINFORCING SHALL BE DETERMINED BY THE CONTRACTOR (SEE SPECIFICATIONS).
3. EXPOSE PORTION OF EXISTING SHOTCRETE TO EXPOSE CIRCUMFERENTIAL PRESTRESSING STRANDS PRIOR TO DRILLING HOLES FOR THE SHEAR BARS. REPLACE WITH SHOTCRETE OR DRYPACK IC : 2S PRIOR TO PLACING THE PILASTER, (TYP).
4. PIPE SUPPORTS SHALL BE DESIGNED BY THE CONTRACTOR.

FILENAME: 6232-S502.dwg
LAST UPDATED: 01/20/2012 11:40 AM
LAST SAVED BY: cstelea

No.	DATE	REVISIONS	APPROVED

DESIGNED: SMS
DRAWN: CS
CHECKED: SMS

RBF CONSULTING

carollo

IRVINE RANCH WATER DISTRICT

SALAHUDDIN M. SHEIKH RCE NO. 32677 STRUCTURAL ENGINEER DATE
CINDY MILLER RCE NO. 58116 PROJECT MANAGER DATE
PATRICIA UEMATSU RCE NO. 36762 PRINCIPAL ENGINEER DATE

IRVINE RANCH WATER DISTRICT
BAKER WATER TREATMENT PLANT
PROJECT NO. 11218

PRODUCT WATER CLEARWELLS
INLET PIPING MODIFICATIONS
SECTIONS AND DETAILS

DRAWING S502

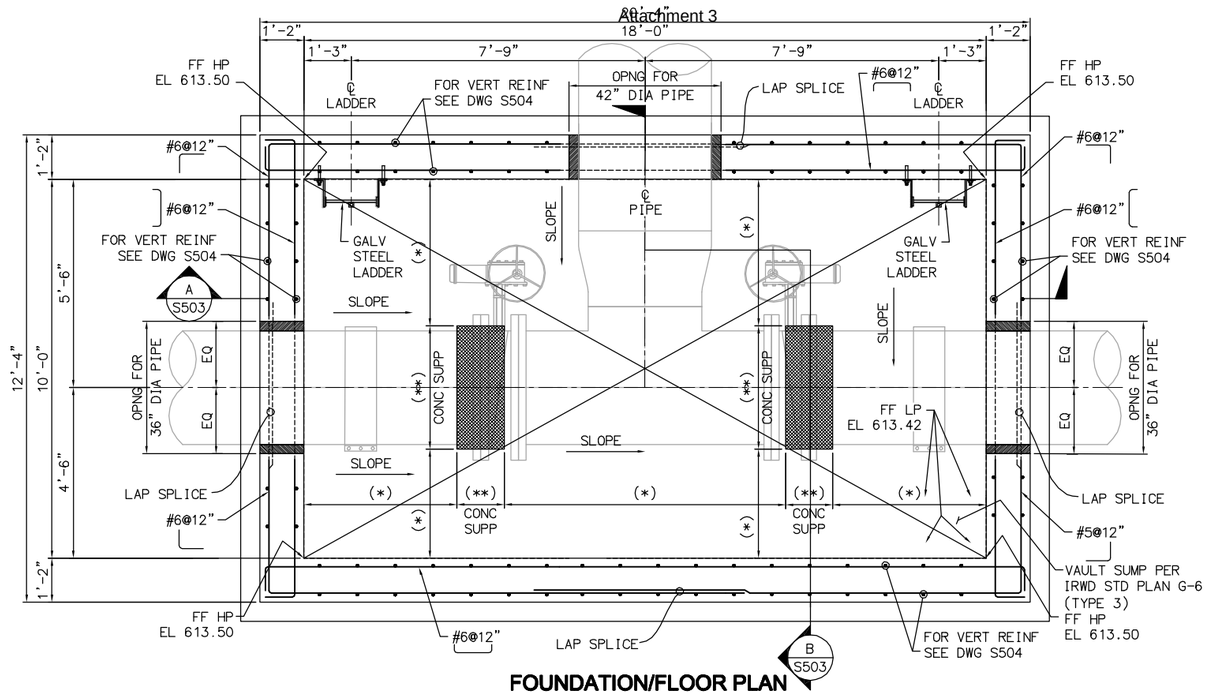

FOUNDATION/FLOOR PLAN

SCALE: 1/2"=1'-0"

NOTES:

1. CONTRACTOR SHALL VERIFY DIMENSIONS MARKED WITH (*) PER VALVES/PIPING SHOP DRAWINGS.
2. DIMENSIONS MARKED WITH (**) SHALL BE PER DETAIL 5 ON DRAWING M007.

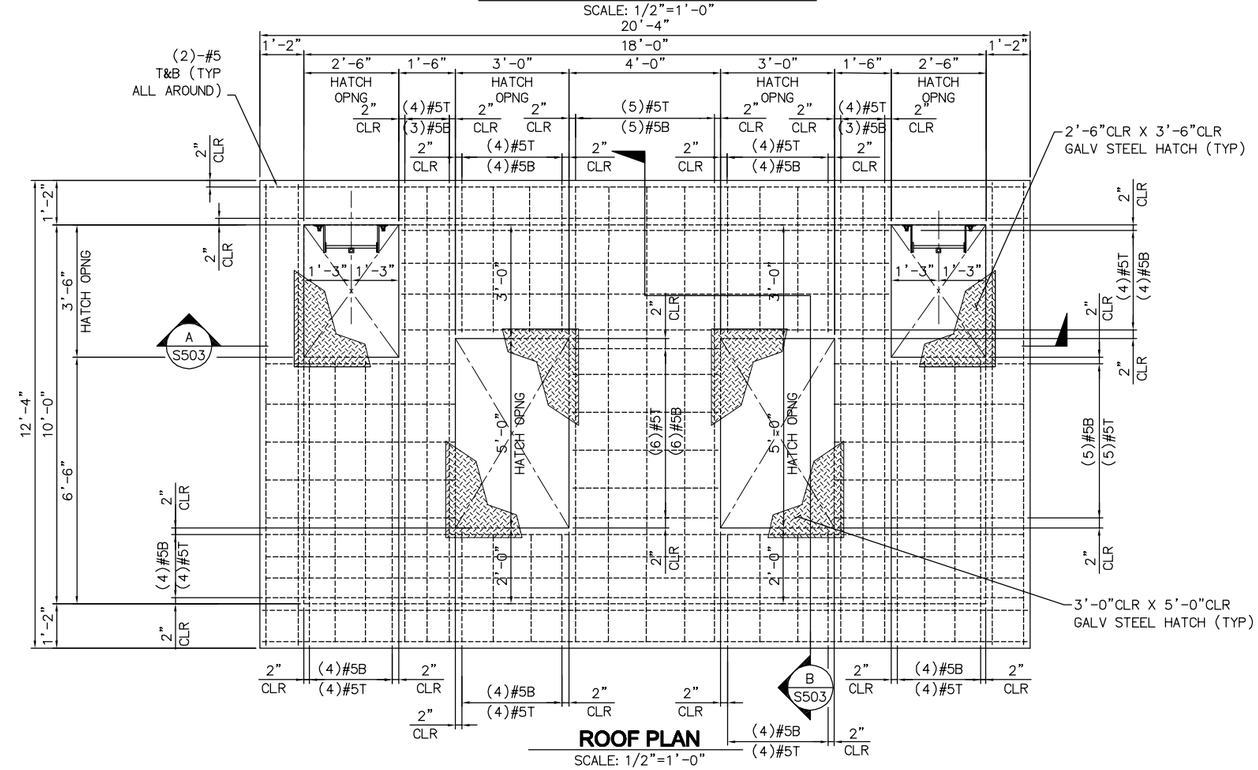

ROOF PLAN

SCALE: 1/2"=1'-0"

LEGEND:

- CONCRETE PIPE SUPPORT
- GALV STEEL HATCH

No.	DATE	REVISIONS	APPROVED

DESIGNED: FSD
DRAWN: CS
CHECKED: SMS

RBF CONSULTING

carollo

IRVINE RANCH WATER DISTRICT

SALAHUDDIN M. SHEIKH	RCE NO. 32677	STRUCTURAL ENGINEER	DATE
CINDY MILLER	RCE NO. 58116	PROJECT MANAGER	DATE
PATRICIA UEMATSU	RCE NO. 36762	PRINCIPAL ENGINEER	DATE

IRVINE RANCH WATER DISTRICT
BAKER WATER TREATMENT PLANT
PROJECT NO. 11218

PRODUCT WATER CLEARWELLS INLET PIPING VAULT FOUNDATION AND ROOF PLANS

DRAWING **S503**

SHEET **263** OF **632**

LAST SAVED BY: csteleg LAST UPDATED: 01/21/2012 06:23 PM FILENAME: 6232-S503.dwg

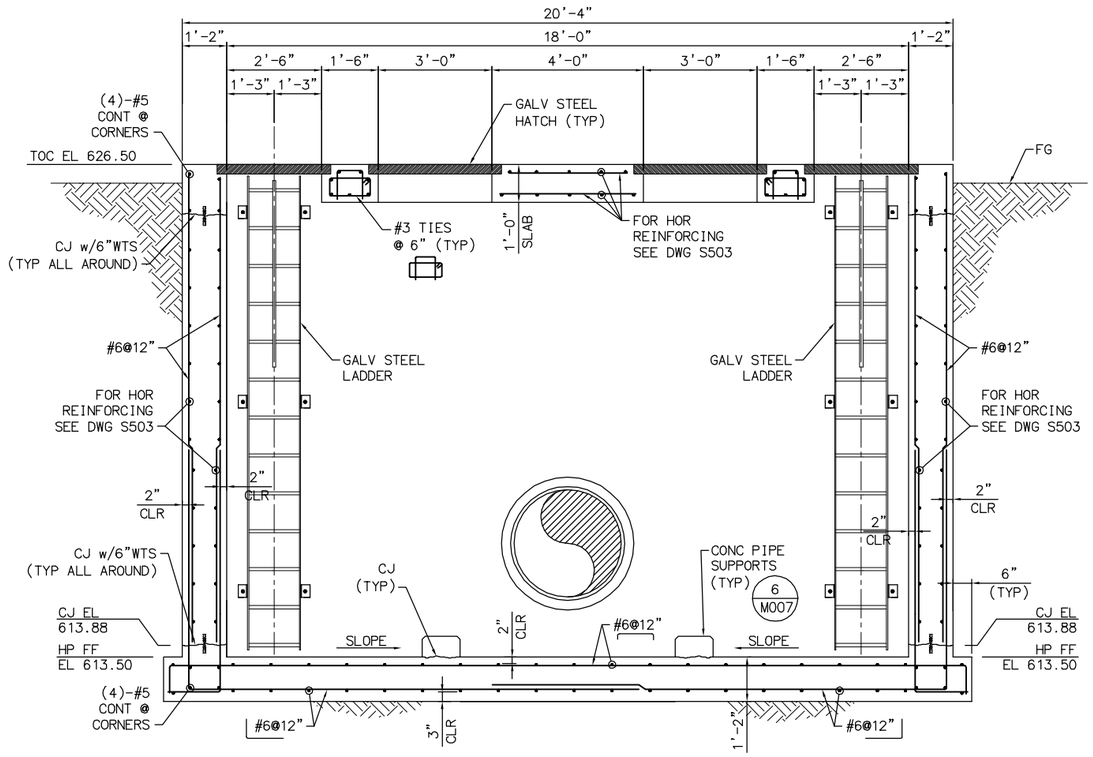

SECTION A
SCALE: 1/2" = 1'-0"

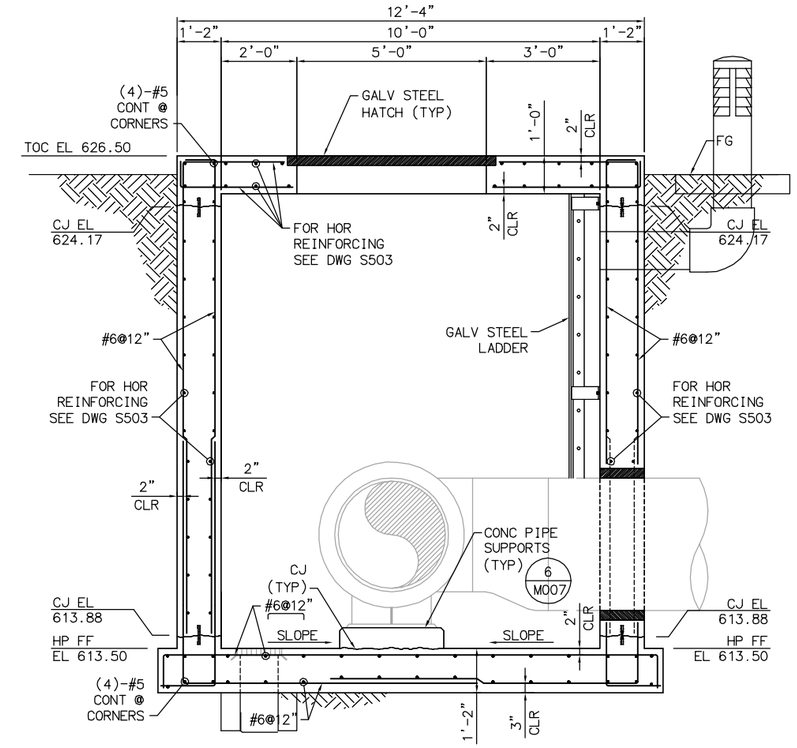

SECTION B
SCALE: 1/2" = 1'-0"

LAST SAVED BY: csteleo LAST UPDATED: 01/20/2012 11:42 AM FILENAME: 6232-S504.dwg

No.	DATE	REVISIONS	APPROVED

DESIGNED: FSD
DRAWN: CS
CHECKED: SMS

RBF CONSULTING

carollo

IRVINE RANCH WATER DISTRICT

SALAHUDDIN M. SHEIKH RCE NO. 32677 STRUCTURAL ENGINEER DATE
CINDY MILLER RCE NO. 58116 PROJECT MANAGER DATE
PATRICIA UEMATSU RCE NO. 36762 PRINCIPAL ENGINEER DATE

IRVINE RANCH WATER DISTRICT
BAKER WATER TREATMENT PLANT
PROJECT NO. 11218

PRODUCT WATER CLEARWELLS INLET PIPING VAULT SECTIONS AND DETAILS

DRAWING **S504**

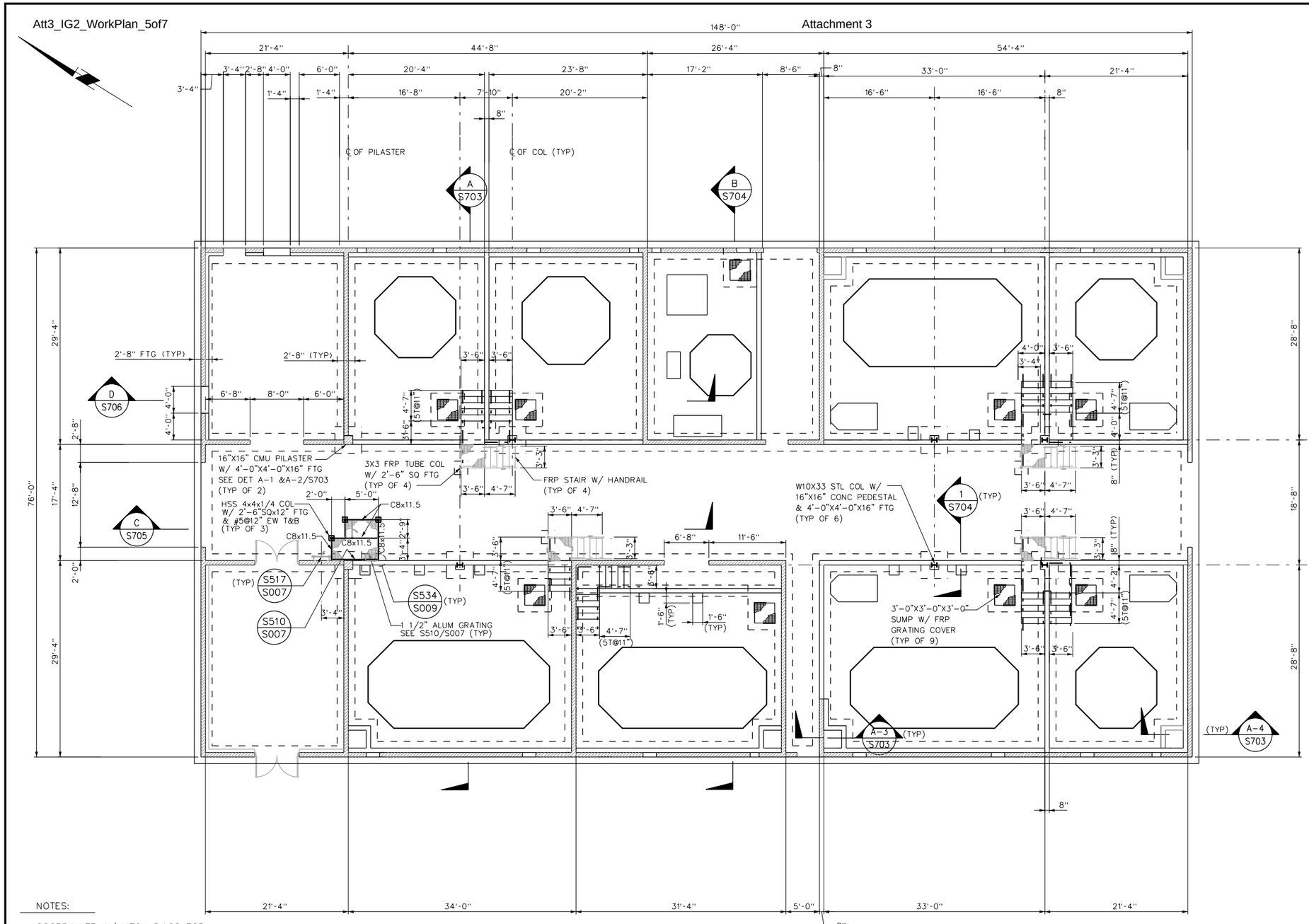

FOUNDATION PLAN

SCALE: 1/8" = 1'-0"

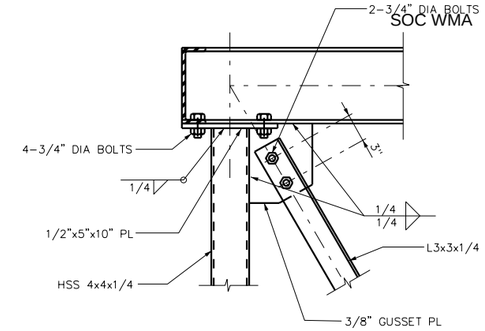

DETAIL 1/S705

SCALE: 1½" = 1'-0"

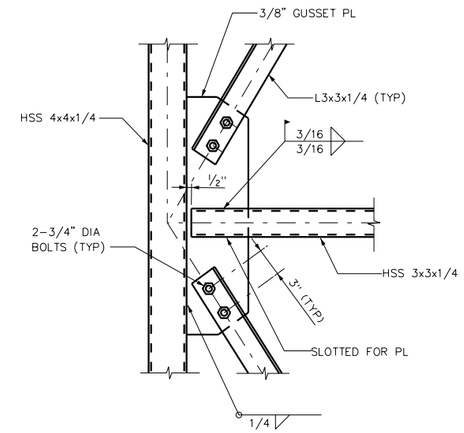

DETAIL 2/S705

SCALE: 1½" = 1'-0"

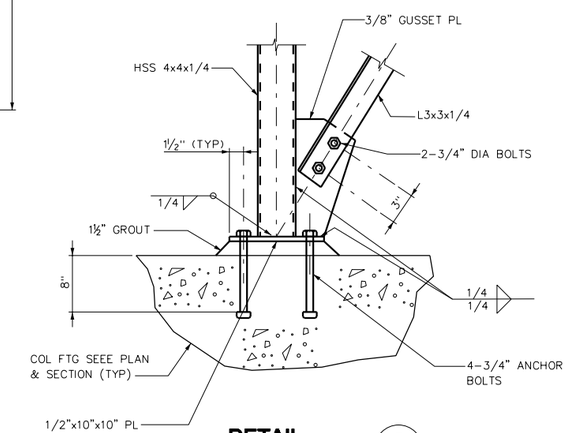

DETAIL 3/S705

SCALE: 1½" = 1'-0"

NOTES:

1. COORDINATE W/ MECH DWGS FOR EQUIPMENT PADS LOCATIONS & SIZES.
2. COORDINATE W/ HVAC DWGS FOR EQUIPMENT & LOUVERS, SIZES & LOCATIONS.
3. COORDINATE W/ ARCH DWGS FOR DOORS, WINDOWS & STUD WALLS LOCATIONS.

No.	DATE	REVISIONS	APPROVED

DESIGNED: OAA
DRAWN: GMT
CHECKED: OAA

RBF CONSULTING

carollo

IRVINE RANCH WATER DISTRICT

M. OSAMA ABDEL-AAL	RCE NO. 34252	PROJECT MANAGER	DATE
JIM MEYERHOFER	RCE NO. 48451	PROJECT MANAGER	DATE
PATRICIA UEMATSU	RCE NO. 36762	PRINCIPAL ENGINEER	DATE

IRVINE RANCH WATER DISTRICT
BAKER WATER TREATMENT PLANT
PROJECT NO. 11218

CHEMICAL BUILDING
FOUNDATION PLAN AND DETAILS

DRAWING S701

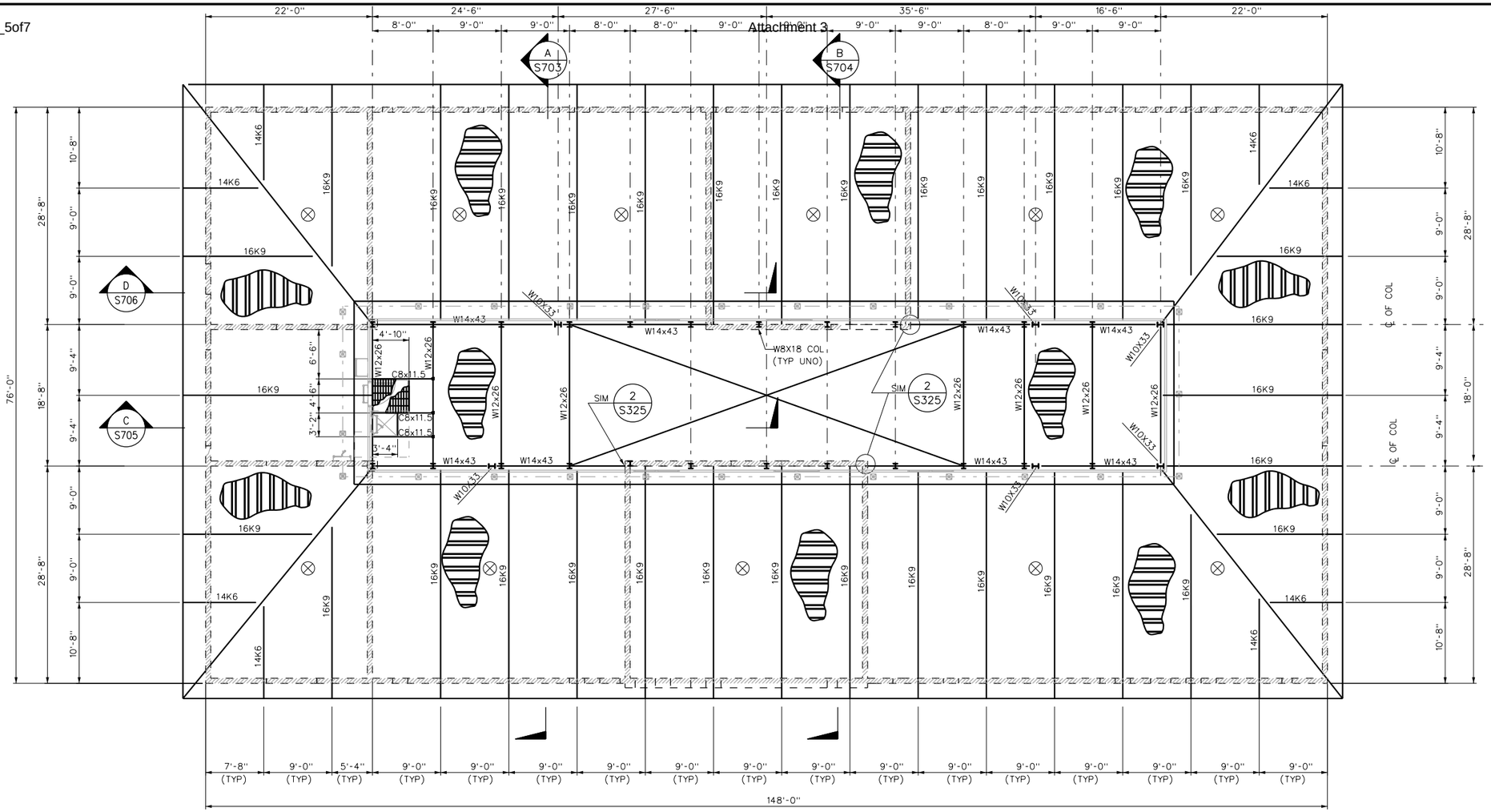

LOWER ROOF FRAMING PLAN

SCALE: 1/8" = 1'-0"

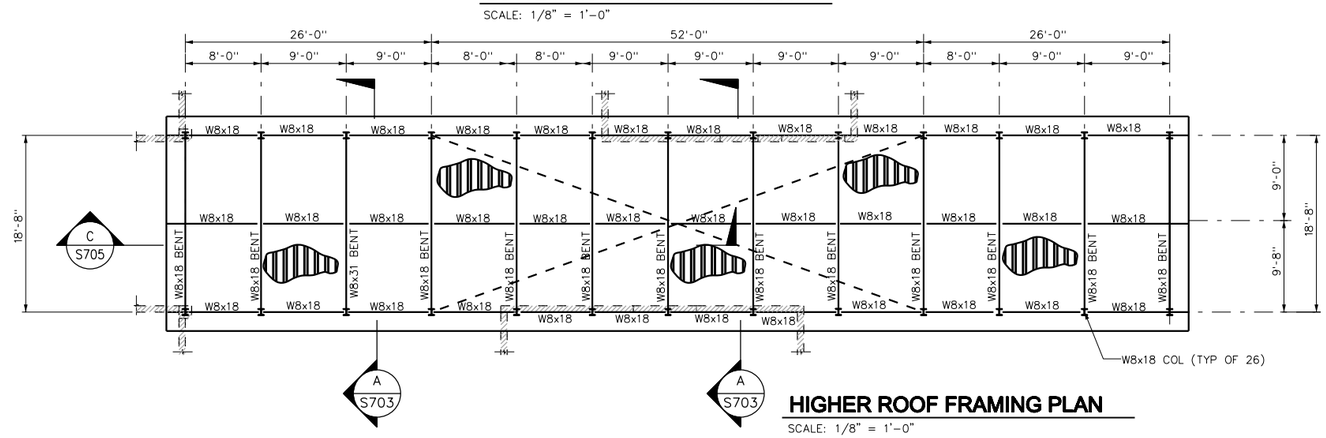

HIGHER ROOF FRAMING PLAN

SCALE: 1/8" = 1'-0"

NOTES : **SOC WMA**

1. SEE SHEET S001 TO S110 FOR STRUCTURAL STANDARD DETAILS AND MISC. PLANS, SECTIONS & DETAILS.
2. ROOF METAL DECK SHALL BE 1 1/2", 18GA. GALV. STEEL DECK, TYPE B-36 BY "VERCO" OR APPROVED EQUAL.

DECK WELDING :

WELD DECK SECTIONS TO ALL SUPPORTING MEMBERS, BEARING PLATES OR SUPPORTS AT BUTT JOINTS, AT INTERMEDIATE SUPPORTS, SIDE SUPPORTS, AND AT END SUPPORTS WITH ½" EFFECTIVE DIAMETER PUDDLE WELDS SPACED AT 12 INCHES ON CENTER AT MEMBERS PARALLEL TO THE RIBS AND AT EVERY RIB VALLEY AT MEMBERS PERPENDICULAR TO THE RIBS.
SIDE LAPS AND LOMGITUDINAL JOINS BETWEEN DECK SECTIONS SHALL BE WELDE WITH 1 1/2" LONG TOP SEAM WELDS, SPACED AT 12" ON CENTER.

3. PROVIDE 4-#5 CHORD REINF. CONTINUOUS AT TOP OF CMU WALLS AT ROOF LEVEL (54" LAP STAGGERED) TYP.
4. ROOF STEEL JOISTS OF TYPE "K" OR "LH" ARE BY VULCRAFT OR EQUAL.
5. ALL CANTILIVERED JOIST TOP CHORD SHALL BE DESIGNED FOR 560 LB/FT AND 1500 LBS CONCENTRATED LOAD.
6. COORDINATE ROOF PENETRATIONS WITH ARCHITECTURAL AND HVAC DRAWINGS.
7. JOIST MANFACTURER SHALL SUBMIT DESIGN CALC'S TO VERIFY JOIST CAPACITY FOR THE JOIST FOLLOWING LOADING CONDITIONS:

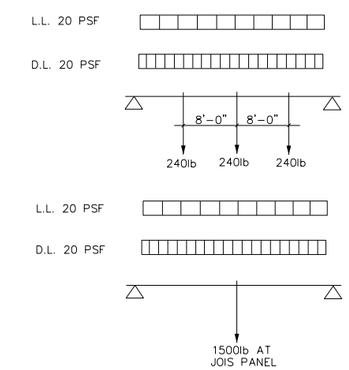

8. ALL JOISTS SHALL BE DESIGNED FOR NET UPLIFT OF 10 PSF (ASD).
9. FOR SOLAR TUBES SEE ARCHITECTURAL DRAWING FOR LOCATIONS.

No.	DATE	REVISIONS	APPROVED

DESIGNED: OAA
DRAWN: GMT
CHECKED: OAA

RBF CONSULTING

carollo

IRVINE RANCH WATER DISTRICT

M. OSAMA ABDEL-AAL	RCE NO. 34252	PROJECT MANAGER	DATE
JIM MEYERHOFER	RCE NO. 48451	PROJECT MANAGER	DATE
PATRICIA UEMATSU	RCE NO. 36762	PRINCIPAL ENGINEER	DATE

IRVINE RANCH WATER DISTRICT
BAKER WATER TREATMENT PLANT
PROJECT NO. 11218

CHEMICAL BUILDING ROOF FRAMING PLAN

DRAWING **S702**

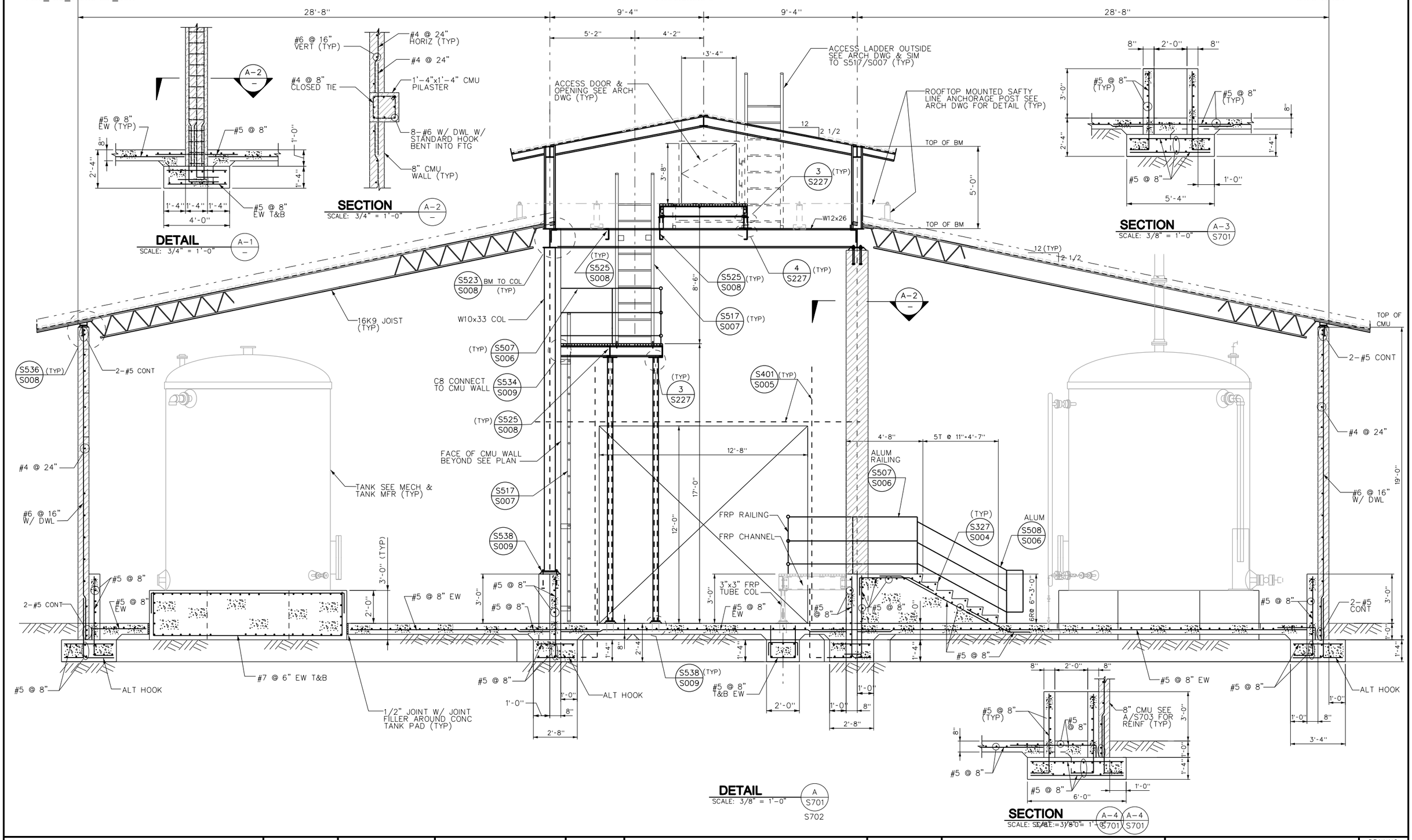

No.	DATE	REVISIONS	APPROVED

DESIGNED: OAA
DRAWN: GMT
CHECKED: OAA

RBF CONSULTING

carollo

IRVINE RANCH WATER DISTRICT

M. OSAMA ABDEL-AAL	RCE NO. 34252	PROJECT MANAGER	DATE
JIM MEYERHOFER	RCE NO. 48451	PROJECT MANAGER	DATE
PATRICIA UEMATSU	RCE NO. 36762	PRINCIPAL ENGINEER	DATE

IRVINE RANCH WATER DISTRICT
BAKER WATER TREATMENT PLANT
PROJECT NO. 11218

CHEMICAL BUILDING
SECTION - A

DRAWING
S703
SHEET
279 OF 632

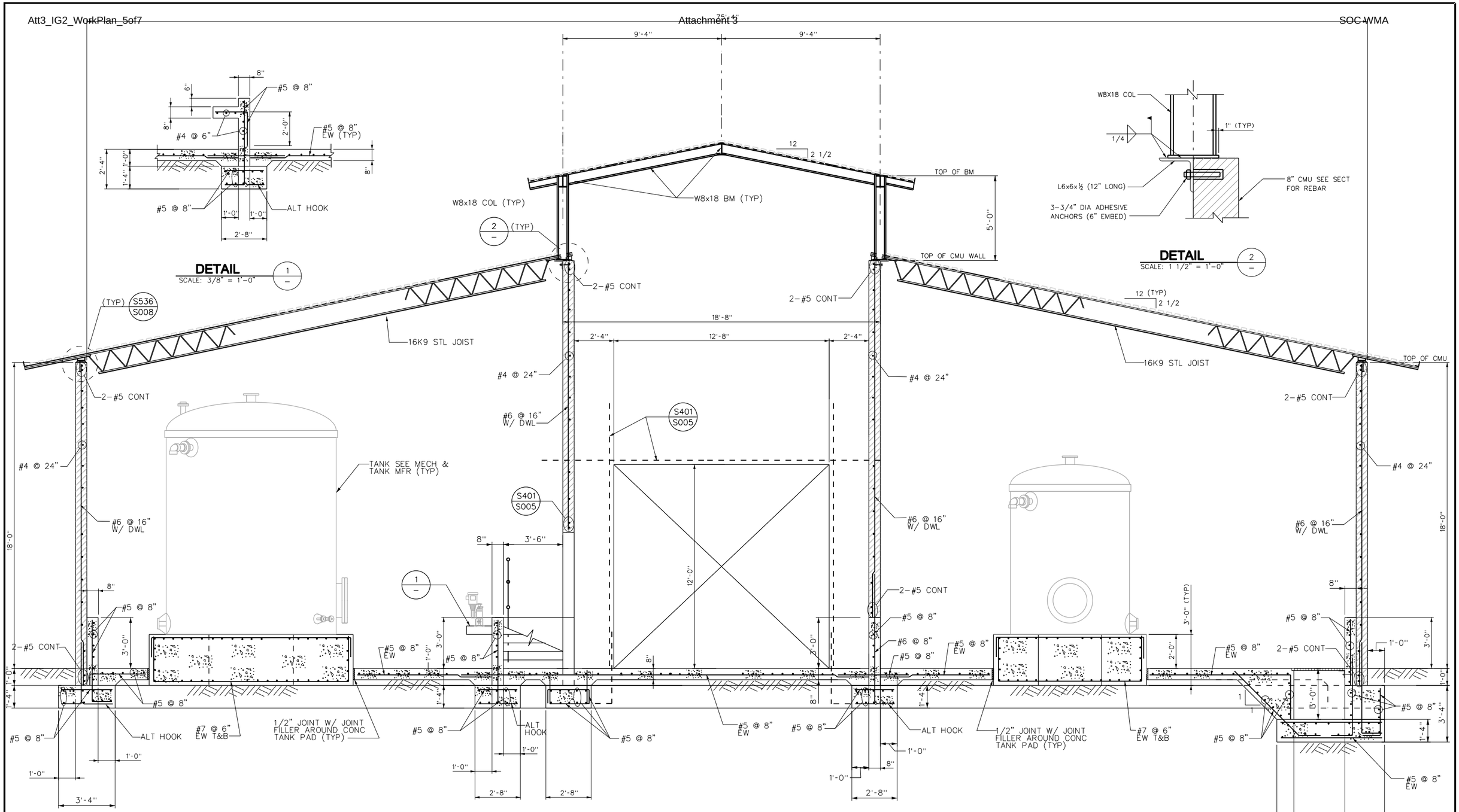

No.	DATE	REVISIONS	APPROVED

DESIGNED: OAA
DRAWN: GMT
CHECKED: OAA

RBF CONSULTING

carollo

IRVINE RANCH WATER DISTRICT

M. OSAMA ABDEL-AAL RCE NO. 34252 PROJECT MANAGER DATE
JIM MEYERHOFER RCE NO. 48451 PROJECT MANAGER DATE
PATRICIA UEMATSU RCE NO. 36762 PRINCIPAL ENGINEER DATE

IRVINE RANCH WATER DISTRICT
BAKER WATER TREATMENT PLANT
PROJECT NO. 11218

CHEMICAL BUILDING SECTION - B

DRAWING **S704**

SHEET **280** OF 632

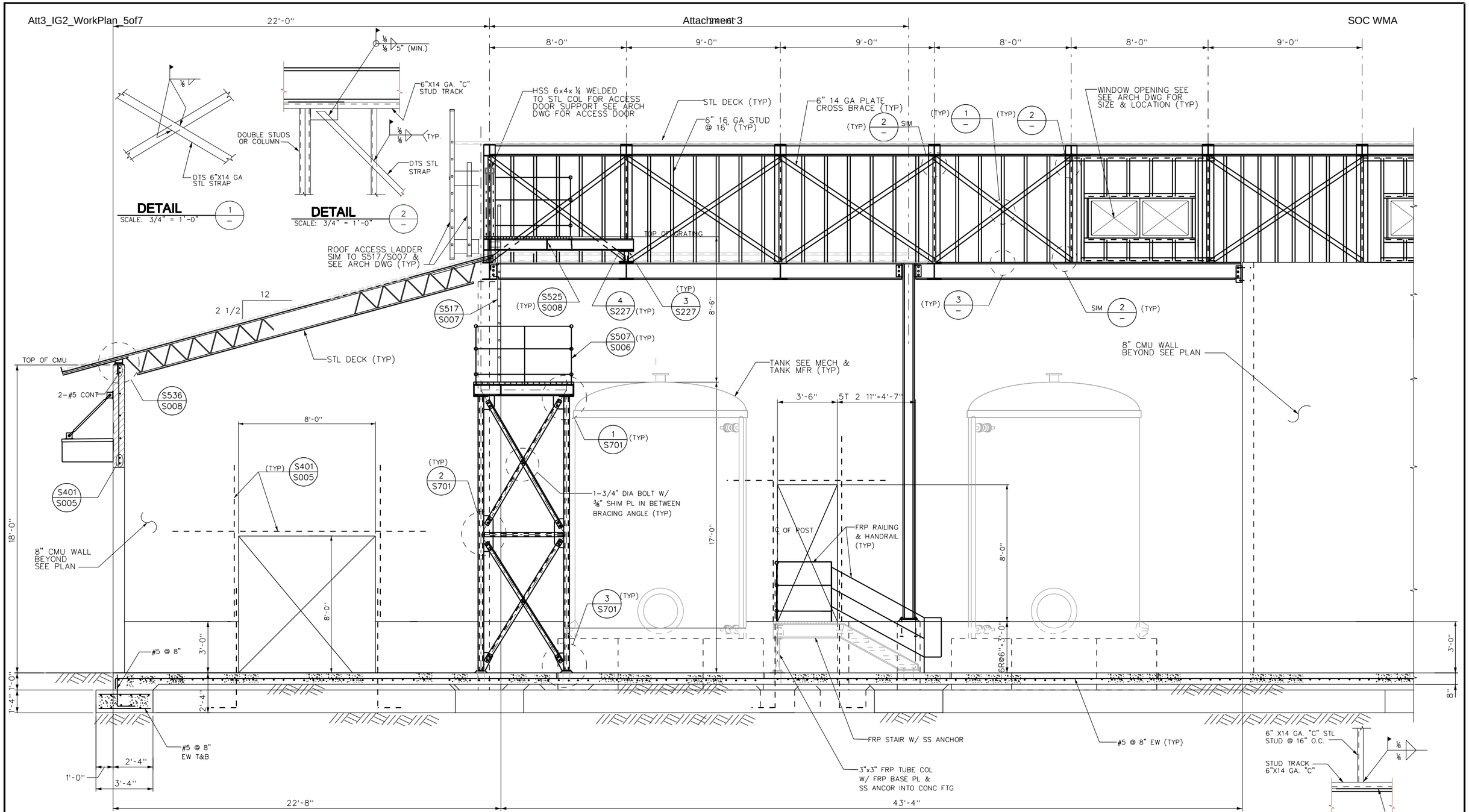

No.	DATE	REVISIONS	APPROVED

DESIGNED: OAA
DRAWN: GMT
CHECKED: OAA

RBF CONSULTING

carollo

IRVINE RANCH WATER DISTRICT

M. OSAMA ABDEL-AAL	RCE NO. 34252	PROJECT MANAGER	DATE
JIM MEYERHOFER	RCE NO. 48451	PROJECT MANAGER	DATE
PATRICIA UEMATSU	RCE NO. 36762	PRINCIPAL ENGINEER	DATE

IRVINE RANCH WATER DISTRICT
BAKER WATER TREATMENT PLANT
PROJECT NO. 11218

CHEMICAL BUILDING SECTION - C

DRAWING
S705
SHEET
281 OF 632

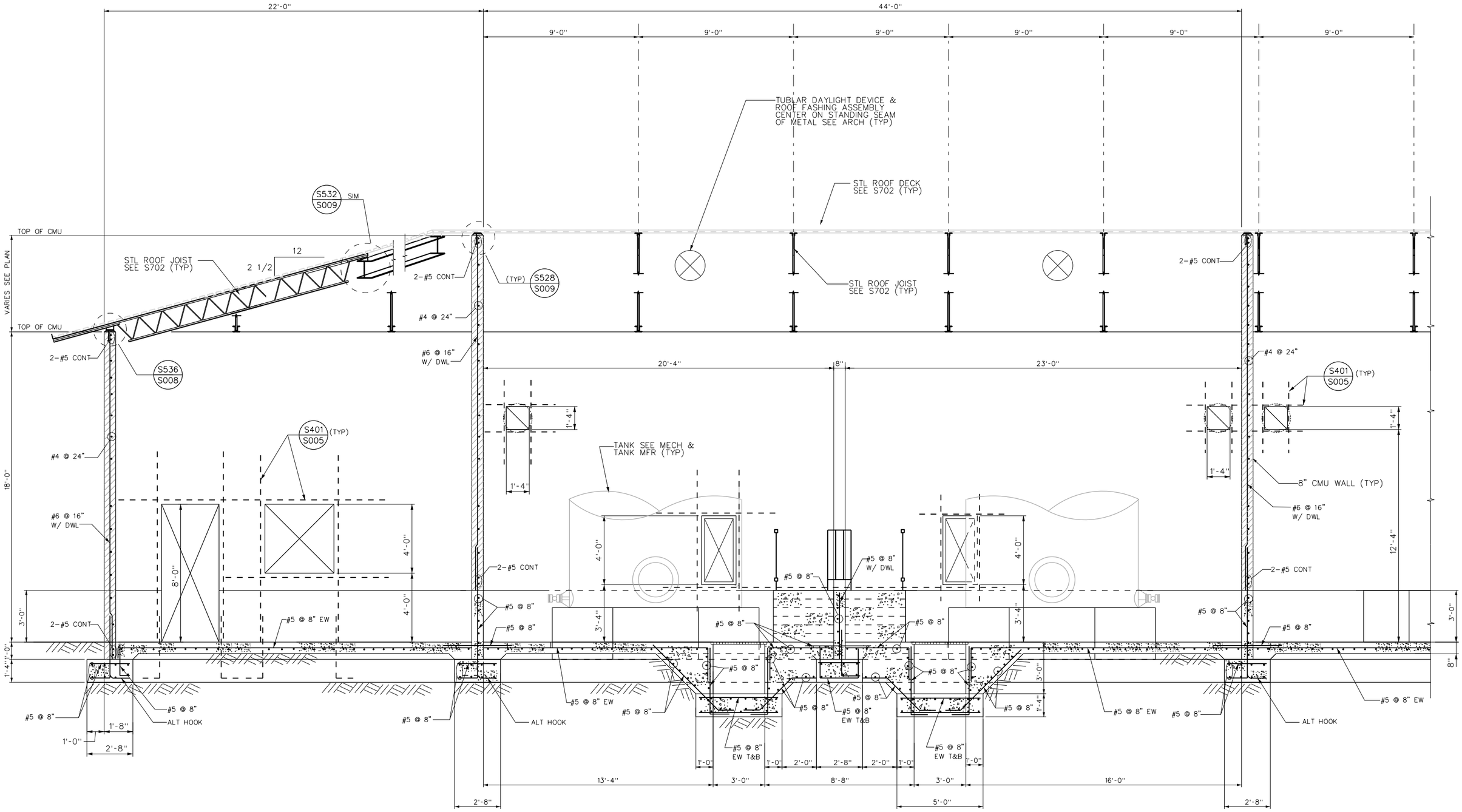

DETAIL D S701 S702
SCALE: 3/8"=1'-0"

No.	DATE	REVISIONS	APPROVED

DESIGNED: OAA
DRAWN: GMT
CHECKED: OAA

RBF CONSULTING

carollo

IRVINE RANCH WATER DISTRICT

M. OSAMA ABDEL-AAL RCE NO. 34252 PROJECT MANAGER DATE
JIM MEYERHOFER RCE NO. 48451 PROJECT MANAGER DATE
PATRICIA UEMATSU RCE NO. 36762 PRINCIPAL ENGINEER DATE

IRVINE RANCH WATER DISTRICT
BAKER WATER TREATMENT PLANT
PROJECT NO. 11218

CHEMICAL BUILDING SECTION - D

DRAWING **S706**
SHEET **282** OF 632

VALVES

ONE LINE PIPE | THREE LINE PIPE

- ANGLE VALVE
- BALL VALVE
- BUTTERFLY VALVE
- 4-WAY VALVE
- GATE VALVE
- KNIFE GATE VALVE (K)
- GLOBE VALVE
- NEEDLE VALVE
- PINCH VALVE
- SEATING PORT
- ECCENTRIC PLUG VALVE
- CONCENTRIC PLUG VALVE
- 3-WAY VALVE
- MOTOR OPERATED VALVE (M)
- PNEUMATIC VALVE (P)
- SAMPLE VALVE (S)
- SOLENOID VALVE (S)
- DIAPHRAGM VALVE
- AIR-RELIEF / VACUUM RELIEF VALVE
- PUMP DISCHARGE
- BUTTERFLY VALVE (BURIED)
- CONE VALVE
- MUD VALVE

CHECK VALVES

ONE LINE PIPE | THREE LINE PIPE

- BACK FLOW PREVENTOR (REDUCED PRESSURE)
- BALL CHECK VALVE
- SWING CHECK VALVE
- DIAPHRAGM CHECK VALVE
- DOUBLE FLAP CHECK VALVE
- FLAPPER CHECK VALVE
- GENERAL SPRING LOADED CHECK VALVE

PRESSURE VALVES

- BACKPRESSURE REG EXTERNAL TAP VALVE
- PRESSURE REDUCING EXTERNAL PRESSURE TAP VALVE
- RELIEF VALVE (OR)
- VACUUM VALVE (OR)
- CONTROL VALVE

PIPING

ONE LINE PIPE | THREE LINE PIPE

- AIR GAP
- VENT TO ATMOSPHERE
- BLIND FLANGE
- CAPPED OR PLUGGED
- DRAIN
- FLEXIBLE CONNECTION
- QUICK DISCONNECT OR FLUSH CONNECTION
- FLUSHING CONNECTION
- DOUBLE CONTAINMENT

GATES

- FLAP
- SLIDE
- SLUICE
- STOP
- SLIDE
- SLUICE
- STOP
- WEIR

PUMPS

- METERING PUMP
- HOSE PUMP
- HORIZONTAL OR SPLIT-CASE CENTRIFUGAL (OR)
- VERTICAL TURBINE
- VERTICAL SUBMERSIBLE
- SUBMERSIBLE (OR)
- DIAPHRAGM

PUMPS CON'T

- GEAR
- PROGRESSIVE CAVITY/POSITIVE DISPLACEMENT
- AIR DRIVEN DIAPHRAGM PUMP

BLOWERS/COMPRESSORS

- CENTRIFUGAL MULTI-STAGE
- COMPRESSOR RECIPROCATING
- FAN
- ROTARY

MISCELLANEOUS

- BASKET STRAINER
- CALIBRATION-COLUMN
- DIAPHRAGM SEAL
- ANNULAR SEAL
- SANITARY SEAL
- EDUCTOR/EJECTOR
- INLINE STATIC MIXER
- PULSATION DAMPENER
- SIGHT TUBE
- PIPE DIFFUSER (OR)
- CORP STOP ASSEMBLY
- CORIOLIS FLOW METER
- MAGNETIC FLOW METER (MM OR FM)
- ROTOMETER
- VENTURI METER (OR)
- PROPELLER METER
- PRESSURE GAUGE
- MIXER
- ROTARY CHEMICAL FEEDER
- CHANNEL AIR/CHEMICAL DIFFUSER
- BLOW-OFF SILENCER
- AIR DRYER
- FLOOR DRAIN OR HUB DRAIN (OR)
- FLOOR SINK
- COALESCER
- DESSICANT DRYER
- FILTER
- FILTER SEPARATOR
- HOSE CONNECTION
- ORIFICE RESTRICTION
- REFRIGERATED DRYER
- RUPTURE DISK
- SAMPLE PORT
- STRAINER WYE TYPE
- STRAINER - MECHANICALLY CLEANED
- STRAINER WITH BLOW OFF
- VAPOR HEATER
- VAPORIZER
- PIPE MATERIAL TRANSITION
- FLOW ARROW
- ULTRASONIC FLOWMETER (CLAMP ON) OR ULTRASONIC SENSOR
- RADAR LEVEL SENSOR
- SURGE TANK
- THERMOMETER
- AIR/CHEMICAL DIFFUSER
- HOSE RACK - WALL MOUNT
- HOSE RACK - STAND

MECHANICAL NOTES:

1. MECHANICAL NOTES APPLY TO ALL MECHANICAL DRAWINGS AND PIPING.
2. NOT ALL THE REQUIRED PIPE SUPPORTS ARE SHOWN ON THE DRAWINGS. THE CONTRACTOR SHALL PROVIDE ALL THE PIPE SUPPORTS SHOWN ON THE DRAWINGS AND ADDITIONAL PIPE SUPPORTS AS REQUIRED PER SPECIFICATIONS.
3. NOT ALL THE REQUIRED FITTINGS ARE SHOWN ON THE DRAWINGS. THE CONTRACTOR SHALL PROVIDE ALL THE FITTINGS SHOWN ON THE DRAWINGS AND ADDITIONAL FITTINGS AS REQUIRED FOR PIPING ARRANGEMENTS SHOWN ON THE DRAWINGS AND PER EQUIPMENT FURNISHED.
4. SUCTION AND DISCHARGE PIPING OF PUMPS SHALL BE INSTALLED AND SUPPORTED IN SUCH A MANNER SO THAT THEY SHALL NOT IMPART STRAIN ON PUMPS.
5. WARNING SIGNS SHALL BE PROVIDED PER SPECIFICATIONS ON FRONT AND BACK OF ALL REMOTELY CONTROLLED EQUIPMENT.
6. ALL PIPING JOINTS SHALL BE PER PIPE SCHEDULE AND IN ACCORDANCE WITH THE SPECIFICATIONS, UNLESS OTHERWISE NOTED ON THE DRAWINGS.
7. ALL FLEXIBLE COUPLINGS SHALL BE RESTRAINED, UNLESS NOTED OTHERWISE.
8. NOT ALL INSTRUMENTATION AND ELECTRIC MOTOR VALVE OPERATORS ARE SHOWN ON THE MECHANICAL DRAWINGS. REFER TO ELECTRICAL AND INSTRUMENTATION DRAWINGS FOR INSTRUMENT AND VALVE OPERATOR LOCATIONS AND INSTALLATION DETAILS.
9. MOUNT ALL VALVES AND MANUAL VALVE OPERATORS IN AN ACCESSIBLE LOCATIONS WITH UNOBSTRUCTED VALVE OPERATOR POSITION FOR EASE OF OPERATION.
10. FOR PROCESS PIPING WHERE PIPE MATERIAL IS STAINLESS STEEL, STRAP, BRACKET, "U"-BOLT, LOCKWASHERS, AND ANCHORS FOR PIPE SUPPORT TO BE STAINLESS STEEL TYPE 316. FOR CHEMICAL PIPING, WHERE PIPE MATERIAL IS STAINLESS STEEL OR HASTELLOY C-2000, SUPPORT SYSTEM TO BE FRP WITH NON-METTALIC APPURTENANCES, UNLESS OTHERWISE NOTED ON THE DRAWINGS.
11. ALL PIPE PENETRATION THROUGH FIRE RATED WALLS OR FLOORS SHALL REQUIRE FIRESTOPPING. SEE SPECIFICATION FOR DETAILS.
12. SCOPE OF SUPPLY PROVIDED BY UF AND UV SYSTEM SUPPLIERS IS INDICATED IN CONTRACT DOCUMENTS. CONTRACTOR SHALL COORDINATE WITH THESE DOCUMENTS TO DETERMINE SCOPE OF SUPPLY TO BE PROVIDED BY CONTRACTOR.

No.	DATE	REVISIONS	APPROVED

DESIGNED: DAH
DRAWN: RCM
CHECKED: TSD

RBF CONSULTING
carollo
IRVINE RANCH WATER DISTRICT

JIM MEYERHOFER	RCE NO. 48451	PROJECT MANAGER	DATE
CINDY MILLER	RCE NO. 58116	PROJECT MANAGER	DATE
PATRICIA UEMATSU	RCE NO. 36762	PRINCIPAL ENGINEER	DATE

IRVINE RANCH WATER DISTRICT
BAKER WATER TREATMENT PLANT
PROJECT NO. 11218

MECHANICAL NOTES AND SYMBOLS

DRAWING M001
SHEET 283 OF 632

FILENAME:8127A10-6232-M001.dwg
LAST UPDATED: 01/31/2012 11:18 AM
LAST SAVED BY: treq

PIPE SCHEDULE

ABBREV.	SERVICE	TEST METHOD	MINIMUM TEST PRESSURE (PSI)
UTILITIES AND GENERAL SERVICE			
AHP	AIR, HIGH PRESSURE PROCESS	AM	200
ALP	AIR, LOW PRESSURE PROCESS	AM	200
AW	ACID WASTE	GR	NOTE 2
AV	ACID VENT	GR	NOTE 2
BD	BOTTOM DRAIN	GR	--
BDR	BASIN DRAIN LINE	GR	--
CAW	CHANNEL AGITATION WATER	HH	50
CD	CHEMICAL DRAIN	GR	--
CDT	CONDUIT	--	--
CLW	CLEAR WATER WASTE	GR	--
CLV	CLEAR WATER VENT	GR	--
CNDS	CONDENSATE	GR	--
CWR	COOLING WATER RETURN	HH	NOTE 2
CWS	COOLING WATER SUPPLY	HH	NOTE 2
CW	POTABLE COLD WATER	--	NOTE 2
DR	DRAIN – PROCESS AREA	GR	--
EL	ELECTRICAL CONDUIT/DUCTBANK	--	--
FPW	FIRE PROTECTION WATER	--	NOTE 3
GS	GRAVITY SEWER	GR	--
HW	POTABLE HOT WATER	--	NOTE 2
IRR	IRRIGATION WATER (MUNICIPAL)	--	NOTE 2
OF	OVERFLOW	GR	--
SS	SANITARY SEWER	--	NOTE 2
PVT	PROCESS VENT	GR	--
RD	ROOF DRAIN	--	NOTE 2
SA	SAMPLE LINE	HH	150
SAN	SANITARY WASTE	--	NOTE 2
SD	STORM DRAIN	--	NOTE 2
SPD	SUMP PUMP DISCHARGE	LH	20
SPW	SOFTENED POTABLE WATER	--	NOTE 2
SUC	STRUCTURAL UNDERDRAIN COLLECTION	GR	--
SUW1	SOFTENED UTILITY WATER 1	HH	150
SV	SANITARY VENT	--	NOTE 2
UW1	UTILITY WATER 1	HH	150
UW2	UTILITY WATER 2	HH	150
SUW2	SOFTENED UTILITY WATER 2	HH	150
SWR	SEAL WATER	HH	150
VNT	VENT	GR	--
VTR	VENT THROUGH ROOF	GR	--
MAJOR PROCESS PIPING			
AS	AIR SCRUB (FOR PALL BACKWASH)	AM	50
RFS	REVERSE FLOW (PALL BACKWASH) SUPPLY	HH	150
CIPAF	CLEAN IN PLACE ACID FEED	HH	150
CIPAR	CLEAN IN PLACE ACID RETURN	HH	150
CIPCF	CLEAN IN PLACE CAUSTIC FEED	HH	150
CIPCR	CLEAN IN PLACE CAUSTIC RETURN	HH	150
FLW	FILTERED WATER	LH	20
MFWW	MEMBRANE FILTRATION WASTE WASHWATER (RF/AS DRAIN)	LH	20
MFW	MEMBRANE FEED WATER	HH	150
NTR	NEUTRALIZED CLEAN IN PLACE SOLUTION	LH	20
PW	PRODUCT WATER	HH	NOTE 4
R	RESIDUALS		
RW	RAW WATER	HH	150
STW	SETTLED WATER		
SWW	STRAINER WASTE WASHWATER	LH	20
SL	SLUDGE	GR	--
UCF	UV REACTOR CLEANING FEED	HH	50
UCR	UV REACTOR CLEANING RETURN	HH	50
WWR	WASHWATER RECYCLE	LH	20
XR	EXCESS RECIRCULATION (PALL)	LH	20
CHEMICALS			
CP	CARRIER PIPE	HH	150
PC	PRIMARY COAGULANT	HH	150
AA	AQUEOUS AMMONIA	HH	150
CDO	CHLORINE DIOXIDE	HH	150
CS	CAUSTIC SODA	HH	150
CA	CITRIC ACID	HH	150
SB	SODIUM BISULFITE	HH	150
SH	SODIUM HYPOCHLORITE	HH	150
HCL	HYDROCHLORIC ACID	HH	150

NOTES:
1. SEE SPECIFICATION SECTION 15956 FOR TEST METHODS AND LEAKAGE ALLOWANCES.
2. TEST IN ACCORDANCE WITH APPLICABLE PLUMBING AND MECHANICAL CODES.
3. TEST IN ACCORDANCE WITH APPLICABLE NFPA FIRE PROTECTION SYSTEM INSTALLATION CODE (I.E., NFPA 13 AND NFPA 24).
4. TEST PRODUCT WATER PIPING TO HYDROSTATIC PRESSURE OF 50 PSIG UPSTREAM OF PRODUCT WATER PUMP STATION, 150 PSIG DOWNSTREAM.

PIPE MATERIAL SCHEDULE

ABBREV.	MATERIAL	FITTINGS
C1	REINFORCED CONCRETE PIPE, ASTM C361	STEEL, AWWA C302
C2	REINFORCED CONCRETE PIPE, ASTM C76	
C6	HUBLESS CAST IRON SOIL PIPE	CAST IRON, ASTM A74
C7	HUB AND SPIGOT CAST IRON SOIL PIPE	CAST IRON, ASTM A74
CU1	COPPER, SOFT TEMPERED TYPE K	COPPER, SOLDERED JOINTS
CU2	COPPER, HARD TEMPERED TYPE L	COPPER, SOLDERED JOINTS
D1	DUCTILE IRON, AWWA, C150, PC150, CEMENT MORTAR LINED, RESTRAINED	DUCTILE IRON, AWWA C110, CL 150
D2	DUCTILE IRON, AWWA, C150, PC150, CEMENT MORTAR LINED, NOT RESTRAINED	DUCTILE IRON, AWWA C110, CL 150
D3	DUCTILE IRON, AWWA, C150, PC150, CORROSION RESISTANT LINING – RESTRAINED	DUCTILE IRON, AWWA C110, CL 150
H1	HOSE, HEAVY DUTY, ABRASIVE SLURRY HANDLING	
H2	HOSE, REINFORCED NYLON	
H3	HOSE, CHEMICAL DUTY, REINFORCED CROSSED LINKED POLYETHYLENE	
H4	HOSE, COMPRESSED AIR HANDLING	
P1	POLYVINYL CHLORIDE (PVC), SCHED. 80	PVC, SCHED. 80, SOLVENT WELD SOCKET
P2	POLYVINYL CHLORIDE (PVC), SCHED. 40	PVC, SCHED. 40, SOLVENT WELD SOCKET
P3	POLYVINYL CHLORIDE (PVC), AWWA C900, DR18	AWWA C907 INJECTION MOLDED PVC
P4	POLYVINYL CHLORIDE (PVC), AWWA C900, DR14	AWWA C907 INJECTION MOLDED PVC
P5	CHLORINATED POLYVINYL CHLORIDE (CPVC), SCHD. 80	CPVC, SCHED. 80, SOLVENT WELD SOCKET
P6	POLYPROPYLENE (PP), SCHD. 40, "GEORGE FISCHER SLOANE–FUSEAL"	HEAT FUSED SOCKET
P7	HIGH DENSITY POLYETHYLENE (HDPE), ASTM D3035, BUTT FUSION JTS, SDR 17	HDPE, BUTT FUSION OR FLANGED
P8	NOT USED	
P9	POLYETHYLENE CORRUGATED, SLOTTED, ASTM F405, F667 FILTER WRAPPED	SPLIT OR INTERNAL COUPLER, ASTMF 667
P10	PVDF (KYNAR)	BUTT FUSION
P11	PVC GRAVITY SEWER PIPING, ASTM D3034 OR ASTM F679	SAME AS PIPE MATERIAL
P12	POLYVINYL CHLORIDE (PVC), SCHED. 40	PVC, SCHED. 40 CONTAINMENT
S1	STEEL, SCHED. 40, GALVANIZED	THREADED OR FLANGED, GALVANIZED
S2	WELDED STEEL, AWWA C200, MORTAR LINED AND EPOXY COATED	STEEL, AWWA C208, MORTAR LINED, EPOXY COATED
S2A	WELDED STEEL, AWWA C200, EPOXY LINED AND COATED	STEEL, AWWA C208, EPOXY LINED AND COATED
S2B	WELDED STEEL, AWWA C200, EPOXY LINED AND MORTAR COATED	STEEL, AWWA C208, EPOXY LINED, MORTAR COATED
S3	WELDED STEEL, AWWA C200, MORTAR LINED AND COATED	STEEL, AWWA C208, MORTAR LINED AND COATED
S4	STAINLESS STEEL TYPE 316L, SCHED. 5, FINISHED ACCORDING TO SPEC	TYPE 316L STAINLESS STEEL, JOINTS AS INDICATED IN DRAWINGS
S5	STAINLESS STEEL TYPE 316L, SCHED. 10 OR HIGHER, FINISHED ACCORDING TO SPEC	TYPE 316L STAINLESS STEEL, JOINTS AS INDICATED IN DRAWINGS
S6	STEEL, ASTM A106 OR 53, SCHED. 80, SEAMLESS BLACK	THREADED, SOCKET, BUTT–WELD OR FLANGED W/ AMMONIA UNIONS
S7	STEEL, ASTM A53, SCHED. 40, BLACK (NATURAL GAS)	MALLEABLE 150 PSI THRD. 2" SMALLER, GREATER THAN 2" WELD
S8	STEEL, ASTM A106 OR 53, SCHED. 40, SEAMLESS BLACK	STEEL ANSI B16.9 BUTT–WELDED. FORGED STEEL, SOCKET WELD, ANSI B16.11, OR STEEL ANSI B16.5, 150LB FLANGE.
S9	STAINLESS STEEL TYPE 304L, SCHED. 5, FINISHED ACCORDING TO SPEC.	TYPE 304L STAINLESS STEEL, JOINTS AS INDICATED IN DRAWINGS
S10	STAINLESS STEEL TYPE 304L, SCHED. 10 OR HIGHER, FINISHED ACCORDING. TO SPECS	TYPE 304L STAINLESS STEEL, JOINTS AS INDICATED IN DRAWINGS
S11	STAINLESS STEEL TYPE 304L, SCHED. 80 OR HIGHER, FINISHED ACCORDING TO SPEC.	TYPE 304L STAINLESS STEEL, JOINTS AS INDICATED IN DRAWINGS
T1	NOT USED	
T2	POLYETHYLENE (PE) TUBING	
T3	POLYPROPYLENE (PP) TUBING	
T4	STAINLESS STEEL TYPE 316 TUBING	
T5	PVDF (KYNAR) TUBING	
T6	BRAIDED POLYVINYL CHLORIDE (PVC) TUBING	

NOTES:

TYPICAL PIPE DESIGNATION

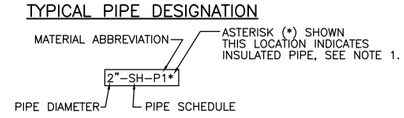

NOTES:
1. REFER TO SPECIFICATION SECTION 15082 FOR PIPING INSULATION REQUIREMENTS.

DRAWING SUMMARY

#	DESCRIPTION
M001 – M022	GENERAL / TYPICAL / DETAILS
M105 – M111	RAW WATER (FLOW CONTROL FACILITY, TCWD PUMP STATION, VALVE OR DIFFUSER VAULTS)
M201 – M212	FOREBAY, MF FEED PUMP STATION, MFWW CLARIFIER
M300 – M322	TREATMENT BUILDING
M401 – M403	CT BASIN
M501 – M521	PRODUCT WATER (CLEARWELLS, PRODUCT WATER PS, PW PIPELINE VALVE VAULT)
M701 – M783	CHEMICAL BUILDING

DRAWING NUMBER (EXAMPLE)

#	DRAWING
M301	TREATMENT BUILDING UPPER LEVEL KEY PLAN

FILENAME: 8127A10-6232-M002.dwg
LAST UPDATED: 01/31/2012 11:03 AM
LAST SAVED BY: trea

No.	DATE	REVISIONS	APPROVED

DESIGNED: DAH
DRAWN: TLR
CHECKED: TSD

RBF CONSULTING
carollo
IRVINE RANCH WATER DISTRICT

JIM MEYERHOFER	RCE NO. 48451	PROJECT MANAGER	DATE
CINDY MILLER	RCE NO. 58116	PROJECT MANAGER	DATE
PATRICIA UEMATSU	RCE NO. 36762	PRINCIPAL ENGINEER	DATE

IRVINE RANCH WATER DISTRICT
BAKER WATER TREATMENT PLANT
PROJECT NO. 11218

MECHANICAL PIPE SCHEDULE AND MATERIAL SCHEDULE - I

DRAWING M002
SHEET 284 OF 632

EQUIPMENT FUNCTIONAL DESCRIPTION			
ABBREV.	DESCRIPTION	ABBREV.	DESCRIPTION
AC	AIR CONDITIONING PACKAGE UNIT	MCC	MOTOR CONTROL CENTER
AHU	AIR HANDLER	MDRV	MAGNETIC DRIVE
ARV	AIR RELIEF VALVE	MOV	MOTORIZED VALVE OPERATOR
ATS	AUTOMATIC TRANSFER SWITCH	MP	METERING PUMP
AV	AIR VAC	MS	MOTOR STARTER
BAT	BATTERY BANK	MSB	MAIN SWITCH BOARD
BCH	BATTERY CHARGER	MTG	METERING SECTION
BCP	BRANCH CIRCUIT PANEL	MTR	MOTOR
BFP	BACK FLOW PREVENTER	MXR	MIXER
BFV	BUTTERFLY VALVE	NSO	RELAY, NEGATIVE SEQUENCE OVERCURRENT
BKR	BREAKER (POWER)	NV	NEEDLE VALVE
BLV	BALANCING VALVE	OPS	OPERATOR
BOL	BOILER	P	PUMP
BPV	BACK PRESSURE VALVE	PD	PULSATION DAMPENER
BSR	BARSCREEN, RAKE	PIPE	PIPING
BV	BALL VALVE	PIV	PINCH VALVE
BWR	BLOWER	PLC	PROGRAMMABLE LOGIC CONTROLLER
CEN	CENTRIFUGE	PM	POWER MONITOR
CF	CARTRIDGE FILTER	PRD	PRESSURE REDUCING VALVE
CHL	CHLORINATOR	PRG	PRESSURE REGULATING VALVE
CHR	CHILLER	PRV	PRESSURE RELIEF VALVE/PRESSURE REDUCING VALVE
CLF	CLARIFIER	PRVB	PRESSURE RELIEF/VACUUM BREAKER
CLR	COLLECTOR, SLUDGE OR SCUM	PTEQ	PORTABLE EQUIPMENT
CMP	COMPRESSOR	PTS	POTENTIAL TRANSFORMER
CND	CONDENSOR	PUR	PURIFIER
CON	CONTROLLER, MOTOR, ELECTRONIC	PV	PLUG VALVE
CP	PANEL (CONTROL, FIELD)	PVD	RELAY, DIFFERENTIAL VOLTAGE
CRN	CRANE	PWR	RELAY, PILOT WIRE DIFFERENTIAL
CT	CURRENT TRANSFORMER	PWS	RELAY, PILOT WIRE SENDING
CTW	COOLING TOWER	REF	REFRIGERATOR, STORAGE
CUB	CUBICLE	REG	REGULATOR
CV	CHECK VALVE	RLY	RELAY
CVY	CONVEYOR	RPD	REDUCED PRINCIPLE DEVICE
DG	DEGASSIFIER	RPR	RELAY, POWER DIFFERENTIAL
DLN	DRIVE LINE	SBD	RELAY, STATIC DIFFERENTIAL
DP	DISTRIBUTION PANEL 480V OR 240V	SBK	STANDBY POWER BREAKER
DPR	RELAY, MACHINE DIFFERENTIAL	SBR	SCRUBBER
DRY	DRYER	SCPR	SERVICE CONNECTION PRESSURE REGULATOR
EF	EXHAUST FAN	SF	SUPPLY FAN
ELV	ELEVATOR	SFR	RELAY, STATIC FREQUENCY
ENG	ENGINE	SLV	SLEEVE VALVE
EVP	EVAPORATOR	SOF	SOFTENER
EW	EYE WASH (SAFETY SHOWER)	SPR	SEPARATOR
EXR	EXCHANGER	STR	STRAINER
F	FAN	STRC	STRUCTURE
FBK	FEEDER BREAKER	SV	SOLENOID VALVE
FIX	FIXTURE, LIGHTING	SWBD	SWITCHBOARD
FLA	FLAME ARRESTOR	SWGR	SWITCHGEAR
FLR	FLARE	SWI	SWITCH
FLT	FILTER	SWP	SWEEP ARM ASSEMBLY
FLV	FLAPPER VALVE	SYN	RELAY, SYNC CHECK
FP	FEED PUMP	TBC	TURBOCHARGER
FPP	FIBER OPTIC PATCH PANEL	TBK	TIE BREAKER
FRM	FRAME	TCV	THROTTLE CONTROL VALVE
FRQ	RELAY, FREQUENCY	TK	TANK
FRX	FIRE EXTINGUISHER	TOC	RELAY, TIME OVERCURRENT
GAT	GATE	TOU	RELAY, TIME OVER/UNDER VOLTAGE
GBK	GENERATOR BREAKER	TRP	TRAP
GBX	GEARBOX	TSV	TELESCOPING VALVE
GDR	GRINDER	TUR	TURBINE
GEN	GENERATOR	TUV	RELAY, TIME VOLTAGE
GEX	GENERATOR EXCITER	TWR	TOWER (SURGE)
GLV	GLOVE VALVE	UPS	UNINTERRUPTABLE POWER SUPPLY
GOP	GATE OPERATOR	UVS	RELAY, UNDER VOLTAGE AND PHASE SEQUENCE
GV	GATE VALVE	VB	VACUUM BREAKER (WATER)
HMI	HUMAN MACHINE INTERFACE	VBR	RELAY, VOLTAGE BALANCE
HTR	HEATER	VDC	DOUBLE CHECKVALVE (FIRE SYSTEM)
IOC	RELAY, INSTANTANEOUS OVERCURRENT	VEHL	VEHICLE
IRC	IRRIGATION CONTROLLER	VFD	VARIABLE FREQUENCY DRIVE
ITC	RELAY, INS/TIME OVERCURRENT	VKG	KNIFE GATE VALVE
LER	RELAY, LOSS OF EXCITATION	VNTV	VENT VALVE
LP	LIGHTING PANEL/LOW VOLTAGE PANEL	VRD	RELAY, RESTRAINED DIRECTIONAL OVERCURRENT
M	MECHANICAL EQUIPMENT	XFMR	TRANSFORMER
MBK	MAIN BREAKER		

TYPICAL EQUIPMENT DESIGNATION

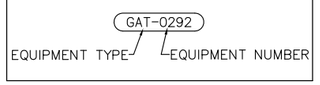

NOTES

1. EQUIPMENT DESIGNATORS ARE PROCEEDED BY PLANT PROCESS AREA AND PROCESS STREAM DESIGNATIONS AS NOTED IN THE LOWER LEFT HAND CORNER OF MECHANICAL DRAWINGS.
2. EQUIPMENT PROVIDED BY THE MEMBRANE SUPPLIER (PALL) USES ITS OWN TAGGING SYSTEM AS DESCRIBED IN THE PALL PIDS. IT DOES NOT USE PROCESS STREAM AND PROCESS AREA DESIGNATIONS.
3. VALVES PROVIDED BY THE CONTRACTOR THAT ARE INTEGRAL TO THE PALL SYSTEM ARE TAGGED WITH PALL DESIGNATIONS.

SECTION AND DETAIL NUMBERING SYSTEM

SECTION CUT ON PLAN

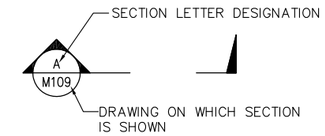

SECTION SHOWN

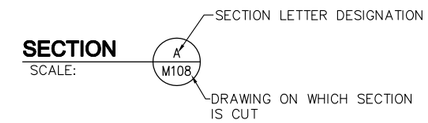

DETAIL NUMBERING SYSTEM

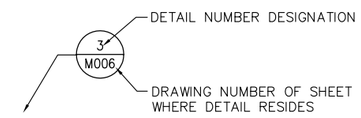

NOTES

1. "VAR" IN DRAWING DESIGNATION AREA INDICATES DETAIL APPLIES TO MORE THAN ONE DRAWING.
2. "–" IN DRAWING AREA INDICATES THAT SECTION OR DETAIL IS SHOWN ON THE SAME DRAWING THAT IT IS CUT FROM OR REFERRED TO.

FILENAME: 8127A10-6232-M003.dwg
LAST UPDATED: 01/31/2012 11:04 AM
LAST SAVED BY: trea

No.	DATE	REVISIONS	APPROVED

DESIGNED: DAH
DRAWN: RCM
CHECKED: TSD

RBF CONSULTING
carollo
IRVINE RANCH WATER DISTRICT

JIM MEYERHOFER	RCE NO. 48451	PROJECT MANAGER	DATE
CINDY MILLER	RCE NO. 58116	PROJECT MANAGER	DATE
PATRICIA UEMATSU	RCE NO. 36762	PRINCIPAL ENGINEER	DATE

IRVINE RANCH WATER DISTRICT
BAKER WATER TREATMENT PLANT
PROJECT NO. 11218

MECHANICAL PIPE SCHEDULE AND MATERIAL SCHEDULE - II

DRAWING M003

NOTES

1. REFER TO INSTRUMENTATION DRAWINGS FOR INSTALLATION DETAILS.

KEY NOTES

1. TO BE MOUNTED ON THE SETTLEDWATER SAMPLE PANEL IN FEED WATER PUMP STATION.
2. TO BE WALL MOUNTED IN TREATMENT BUILDING LABORATORY, DRAIN TO SINK.
3. INSTALL SAMPLE PUMPS IN LOWER LEVEL PIPE GALLERY PER MECHANICAL DRAWINGS.
4. PROVIDED BY MEMBRANE SUPPLIER.
5. SAMPLE LINE TO LABORATORY SAMPLE SINK FAUCET.

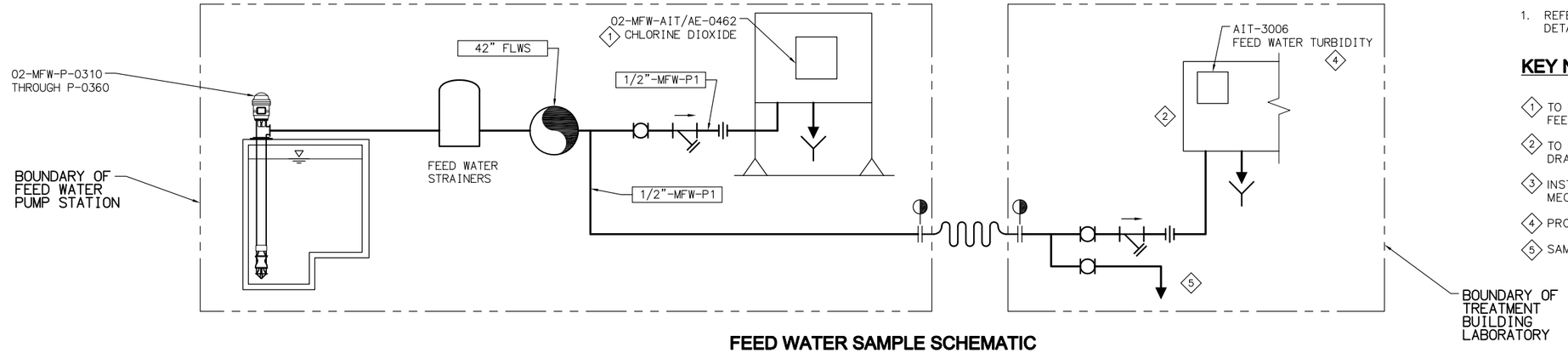

FEED WATER SAMPLE SCHEMATIC

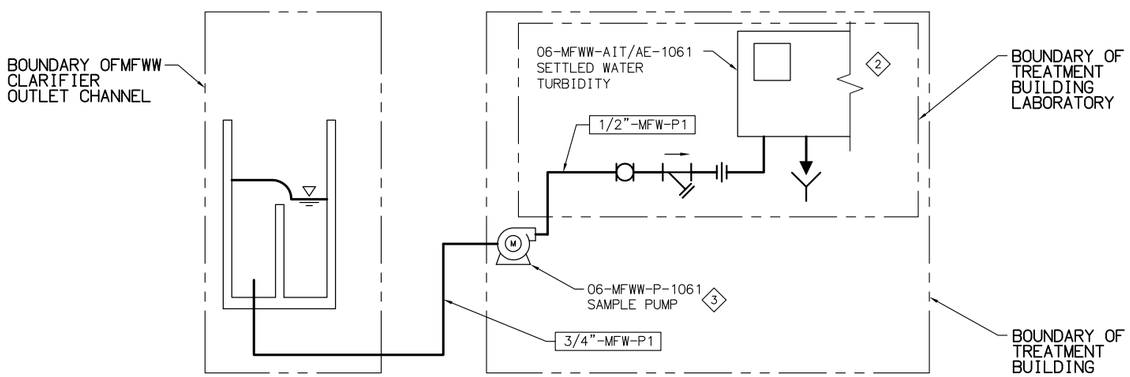

SETTLED WATER SAMPLE SCHEMATIC

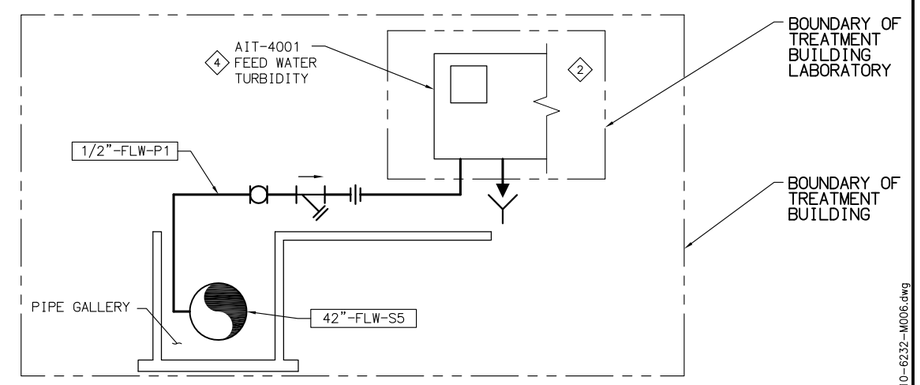

FILTRATE TURBIDITY SAMPLE SCHEMATIC

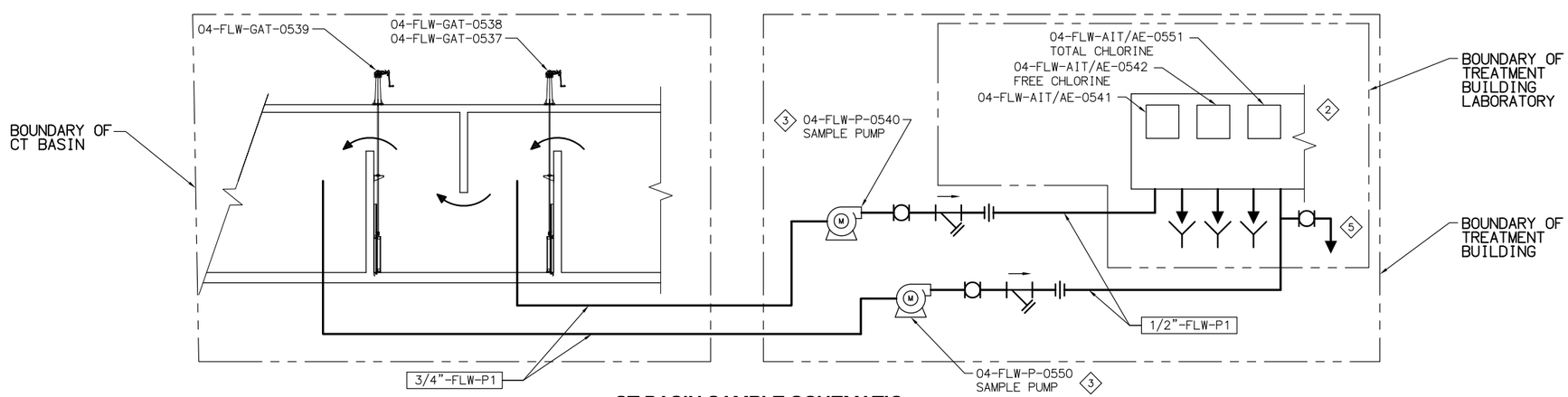

CT BASIN SAMPLE SCHEMATIC

FILENAME: 8127A10-6232-M006.dwg

LAST UPDATED: 01/05/2012 09:18 AM

LAST SAVED BY: trea

No.	DATE	REVISIONS	APPROVED

DESIGNED: DAH
DRAWN: RCM
CHECKED: TSD

RBF CONSULTING

carollo

IRVINE RANCH WATER DISTRICT

JIM MEYERHOFER	RCE NO. 48451	PROJECT MANAGER	DATE
CINDY MILLER	RCE NO. 58116	PROJECT MANAGER	DATE
PATRICIA UEMATSU	RCE NO. 36762	PRINCIPAL ENGINEER	DATE

IRVINE RANCH WATER DISTRICT
BAKER WATER TREATMENT PLANT
PROJECT NO. 11218

SAMPLE WATER SCHEMATICS

DRAWING M006

SHEET 288 OF 632

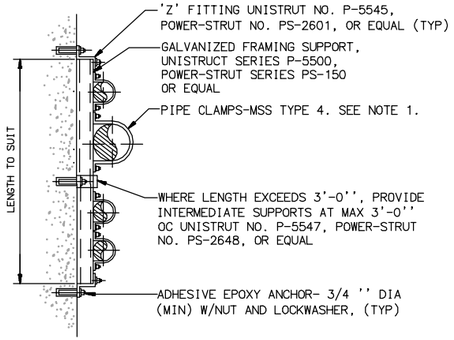

NOTES:

1. WHEN USED WITH PVC OR FIBERGLASS PIPE, PROVIDE STEEL SHIELD AROUND PIPE AT CLAMP WITH LOOSE FIT. WRAP COPPER TUBES WITH 2" WIDE STRIP OF RUBBER FABRIC.

FLUSH MOUNTED PIPE SUPPORT (1 / –)

N.T.S.

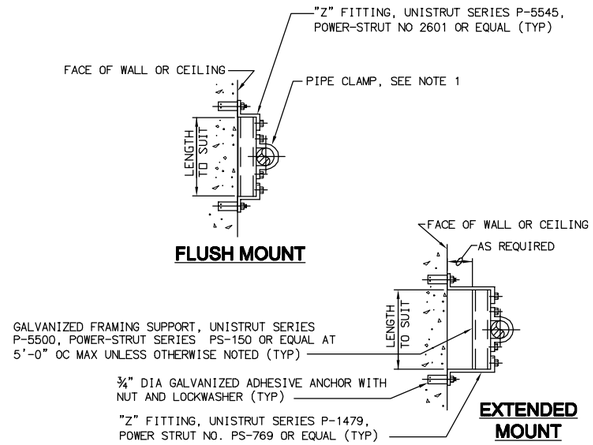

NOTES:

1. WHEN USED WITH PVC OR FIBERGLASS PIPE, PROVIDE STEEL SHIELD AROUND PIPE AT CLAMP WITH LOOSE FIT. WRAP COPPER TUBES WITH 2" WIDE STRIP OF RUBBER FABRIC.
2. USE THIS DETAIL FOR PIPES 6 INCHES AND SMALLER IN DIAMETER

PIPE SUPPORT FOR INDIVIDUAL PIPES (2 / –)

N.T.S.

ADJUSTABLE PIPE SADDLE SUPPORT SCHEDULE DIMENSIONS IN INCHES					
SIZE OF SUPPORTED PIPE	PIPE SIZE "A"	PIPE SIZE "B"	"C"	"D" MINIMUM	"D" MAXIMUM
2 1/2 *	2 1/2	1 1/2	9	8	13
3	2 1/2	1 1/2	9	8 1/2	13 1/2
3 1/2	2 1/2	1 1/2	9	8 1/2	13 1/2
4	3	2 1/2	9	9 1/2	14
6	3	2 1/2	9	10 1/2	15 1/2
8	3	2 1/2	9	11 1/2	16 1/2
10	3	2 1/2	9	13 1/2	18 1/2
12	3	2 1/2	9	15	19 1/2
14	4	3	11	16 1/2	20 1/2
16	4	3	11	17 1/2	22 1/2
18	6	3 1/2	13 1/2	19 1/2	24
20	6	3 1/2	13 1/2	21	25 1/2
24	6	4	13 1/2	23 1/2	28 1/2
30	6	4	13 1/2	27	31 1/2
32	6	4	13 1/2	28 1/2	32 1/2
36	6	4	13 1/2	30 1/2	34 1/2

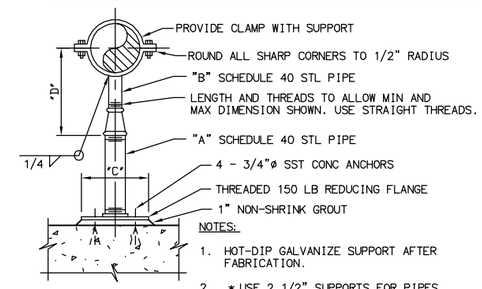

NOTES:

1. HOT-DIP GALVANIZE SUPPORT AFTER FABRICATION.
2. * USE 2 1/2" SUPPORTS FOR PIPES LESS THAN 2 1/2"ø
3. PROVIDE AS 316 SST WHEN SUPPORTING SST. PIPE.

ADJUSTABLE PIPE SUPPORT (3 / –)

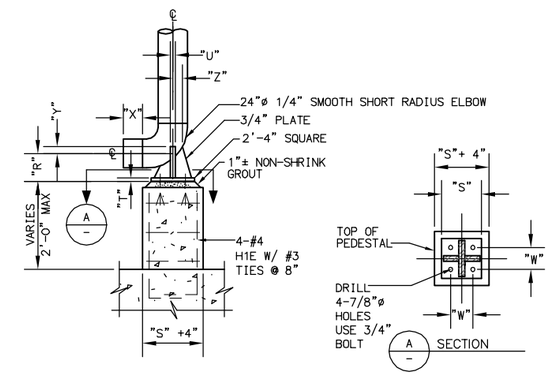

PIPE SIZE	R	S	T	U	W	X	Y	Z
24"	18"	28"	1"	0.75"	22"	12"	2"	6"

ELBOW PIPE SUPPORT (4 / –)

N.T.S.

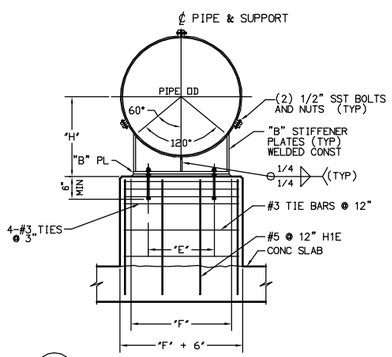

SECTION–SUPPORT AT STRUCTURE (A / –)

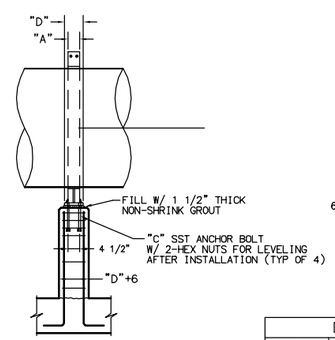

SECTION (B / –)

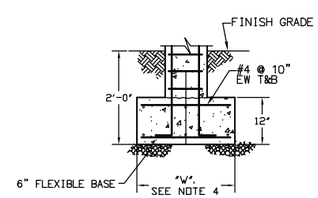

SECTION–ISOLATED SUPPORT W/ FOOTING (C / –)

DIMENSIONS IN INCHES							
NOMINAL PIPE SIZE	A	B	C	D	E	F	H
8	4	3/8	5/8	6	5	8	11
10	4	3/8	5/8	6	6	9	12
12	4	3/8	5/8	6	7	11	13
14	4	3/8	5/8	6	8	12	14
16	4	3/8	5/8	6	9	13	15
18	4	3/8	5/8	6	10	14	16
20	5	3/8	5/8	6	10	15	17
22	5	3/8	5/8	6	12	18	18
24	5	3/8	5/8	6	13	19	19
26	5	3/8	3/4	6	14	21	20
30	5	3/8	3/4	6	16	23	22
34	5	3/8	3/4	6	18	26	24
36	6	3/8	3/4	6	19	27	25
42	6	1/2	1	8	21	31	28

NOTES:

1. IF SUPPORT IS SUBMERGED OR LOCATED BELOW THE TOP OF WALL IN WATER BEARING STRUCTURE, MATERIAL FOR ANCHOR BOLTS AND STRAP SHALL BE TYPE 316 STAINLESS STEEL. IN ALL OTHER AREAS, THE MATERIAL FOR ANCHOR BOLTS AND STRAP SHALL BE HOT-DIP GALVANIZED STEEL UNLESS OTHERWISE INDICATED ON THE DRAWINGS.
2. PROVIDE ALL SST CONSTRUCTION WHERE CALLED OUT ON DRAWINGS. AND WHERE USED TO SUPPORT SST PIPING.
3. "H" IS APPROXIMATE, ADJUST TO MATCH PIPE CENTERLINE.
4. THE WIDTH OF THE FOOTING "W" = 2'-6". THE LENGTH OF THE FOOTING = "D" + 2'-0".
5. CONCRETE TO BE TYPE "K" PER SECTION 03001.

CONCRETE PIPE SUPPORT (5 / –)

N.T.S.

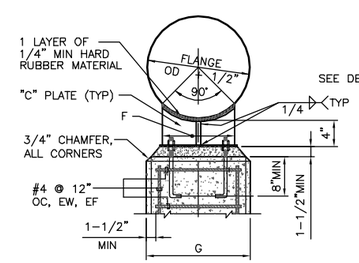

FRONT VIEW

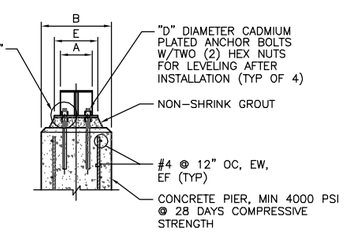

SIDE VIEW

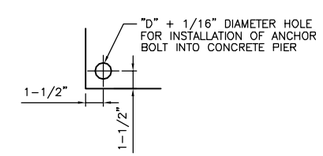

DETAIL "A"

NOTE: GALVANIZE ASSEMBLY AFTER WELDING FABRICATION.

PIPE SUPPORT TABLE							
NOMINAL PIPE SIZE	A	B	C	D	E	SUPPORTING FLANGE F	SUPPORTING FLANGE G
8"	4"	12"	3/8"	5/8"	6"	10"	18"
10"	4"	12"	3/8"	5/8"	6"	12"	18"
12"	4"	12"	3/8"	5/8"	6"	14"	18"
16"	4"	12"	3/8"	5/8"	6"	17"	21"
18"	4"	12"	3/8"	5/8"	6"	18"	22"
20"	4"	12"	3/8"	5/8"	6"	20"	24"
24"	4"	12"	3/8"	5/8"	6"	23"	27"
30"	5"	12"	3/8"	3/4"	6"	28"	34"
36"	6"	15"	3/8"	3/4"	6"	33"	39"
42"	6"	18"	1/2"	1"	8"	38"	44"

CONCRETE PIPE SUPPORT AT FLANGE (6 / –)

N.T.S.

FILENAME: 6232-M007.dwg

LAST UPDATED: 01/27/2012 10:17 AM

LAST SAVED BY: trea

No.	DATE	REVISIONS	APPROVED

DESIGNED: DAH
DRAWN: TLR
CHECKED: TSD

RBF CONSULTING

carollo

IRVINE RANCH WATER DISTRICT

JIM MEYERHOFER	RCE NO. 48451	PROJECT MANAGER	DATE
CINDY MILLER	RCE NO. 58116	PROJECT MANAGER	DATE
PATRICIA UEMATSU	RCE NO. 36762	PRINCIPAL ENGINEER	DATE

IRVINE RANCH WATER DISTRICT
BAKER WATER TREATMENT PLANT
PROJECT NO. 11218

MECHANICAL TYPICAL DETAILS - I

DRAWING M007

SHEET 289 OF 632

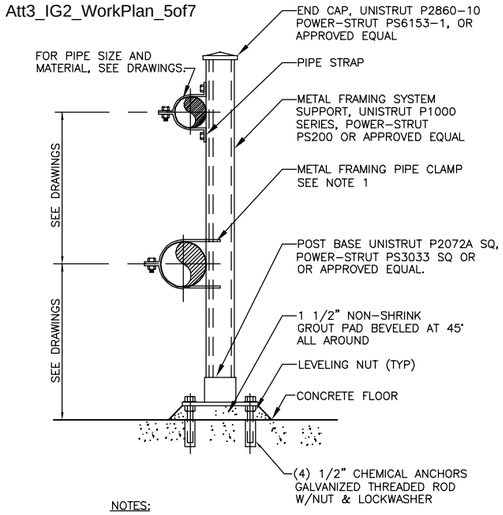

NOTES:

1. WHEN USED WITH PVC OR FIBERGLASS PIPE, INSTALL STEEL SHIELD AROUND PIPE AT PIPE CLAMP, WITH LOOSE FIT. WRAP COPPER TUBING WITH 2" WIDE STRIP OF RUBBER FABRIC, TYP.
2. FOR 4" NOMINAL DIA AND SMALLER PIPE OR ELECTRICAL CONDUIT.
3. PROVIDE AS TYPE 316 SST WHEN SUPPORTING SST PIPE.

SINGLE CHANNEL FLOOR PIPE SUPPORT (1 / –)

N.T.S.

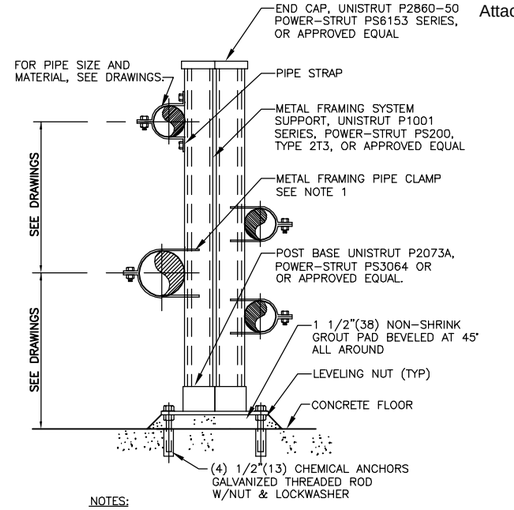

NOTES:

1. WHEN USED WITH PVC OR FIBERGLASS PIPE, INSTALL STEEL SHIELD AROUND PIPE AT PIPE CLAMP, WITH LOOSE FIT. WRAP COPPER TUBING WITH 2"(51) WIDE STRIP OF RUBBER FABRIC, TYP.
2. FOR 4"(100) NOMINAL DIA AND SMALLER PIPE OR ELECTRICAL CONDUIT.
3. PROVIDE AS TYPE 316 SST WHEN SUPPORTING SST PIPE.

DOUBLE CHANNEL FLOOR PIPE SUPPORT (2 / –)

N.T.S.

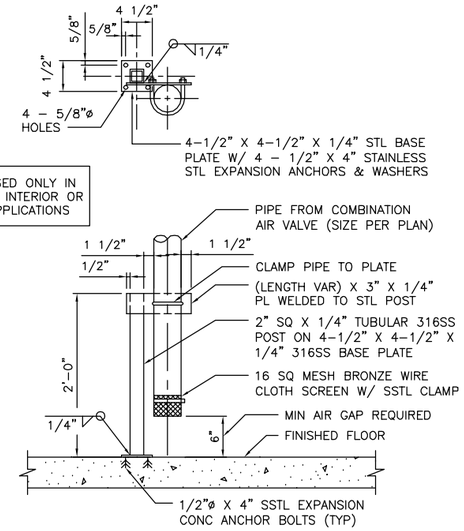

PIPE SUPPORT DETAIL (3 / –)

N.T.S.

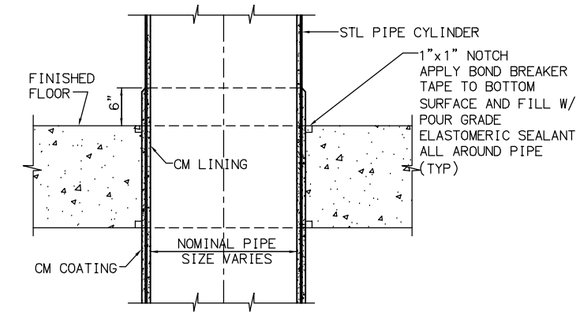

NOTE:
FOR PIPE COATING, LINING AND CYLINDER THICKNESS, SEE SPECS

FLOOR PENETRATION (4 / –)

N.T.S.

NOT USED (5 / –)

N.T.S.

NOT USED (6 / –)

N.T.S.

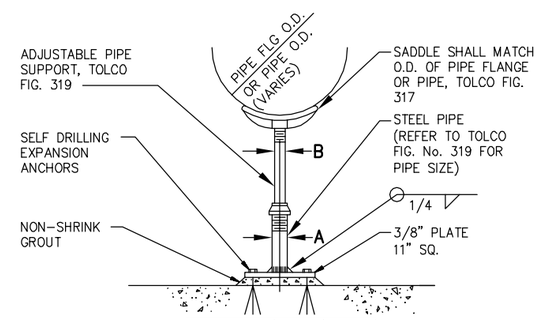

PIPE SIZE BEING SUPPORTED	A PIPE SIZE	B PIPE SIZE
2"	2"	1-1/2"
4"	3"	2-1/2"
6"	3"	2-1/2"
8"	3"	2-1/2"
10"	3"	2-1/2"
12"	3"	2-1/2"
16"	4"	3"
18"	6"	4"
20"	6"	4"

ADJUSTABLE PIPE SUPPORT W/ SADDLE (7 / –)

N.T.S.

NOT USED (8 / –)

N.T.S.

LAST SAVED BY: treo LAST UPDATED: 01/27/2012 10:28 AM FILENAME: 6232-M008.dwg

No.	DATE	REVISIONS	APPROVED

DESIGNED: DAH
DRAWN: TLR
CHECKED: TSD

RBF CONSULTING

carollo

IRVINE RANCH WATER DISTRICT

JIM MEYERHOFER	RCE NO. 48451	PROJECT MANAGER	DATE
CINDY MILLER	RCE NO. 58116	PROJECT MANAGER	DATE
PATRICIA UEMATSU	RCE NO. 36762	PRINCIPAL ENGINEER	DATE

IRVINE RANCH WATER DISTRICT
BAKER WATER TREATMENT PLANT
PROJECT NO. 11218

MECHANICAL TYPICAL DETAILS - II

DRAWING M008

SHEET 290 OF 632

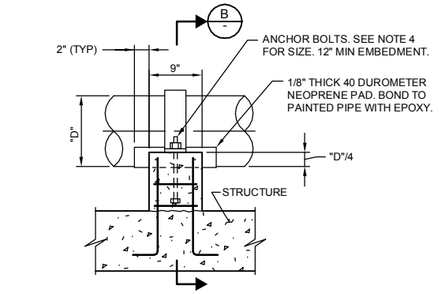

A SECTION-SUPPORT AT STRUCTURE

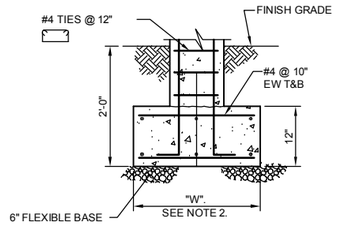

C SECTION-ISOLATED SUPPORT W/FOOTING

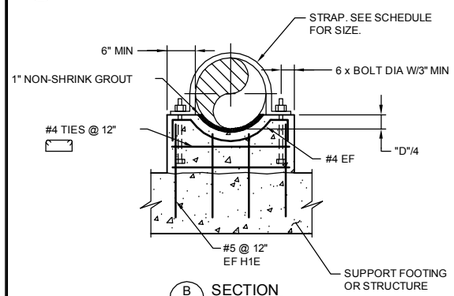

B SECTION

SCHEDULE		
PIPE SIZE	STRAP SIZE	ANCHOR BOLT DIA
8"-12"	FB 1/4" x 4"	1/2"Ø
14"-24"	FB 5/16" x 4"	5/8"Ø
26"-36"	FB 3/8" x 4"	3/4"Ø
48"-84"	FB 5/8" x 4"	1"Ø

NOTES:

1. IF SUPPORT IS SUBMERGED OR LOCATED BELOW THE TOP OF WALL IN WATER BEARING STRUCTURE, MATERIAL FOR ANCHOR BOLTS AND STRAP SHALL BE STAINLESS STEEL. IN ALL OTHER AREAS, THE MATERIAL FOR ANCHOR BOLTS AND STRAP SHALL BE HOT-DIP GALVANIZED STEEL UNLESS OTHERWISE INDICATED ON THE DRAWINGS.
2. THE WIDTH OF THE FOOTING "W" = 2'-6". THE LENGTH OF THE FOOTING = "D" + 2'-0".
3. ANCHOR BOLT DIAMETERS TO BE 3/4" FOR PIPES UP TO 36" DIAMETER AND 1 1/8" FOR LARGER PIPES.
4. CONCRETE TO BE TYPE "K" PER SECTION 03001.
5. PROVIDE TYPE 316 SST STRAP WHEN SUPPORTING SST PIPE. DIELECTRIC MATERIAL SHALL BE INSTALLED BETWEEN STRAP AND PIPE.

CONCRETE PIPE SUPPORT (1)

N.T.S.

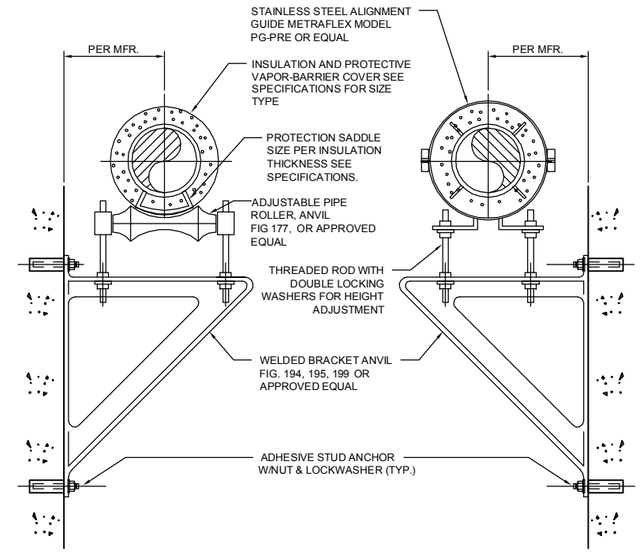

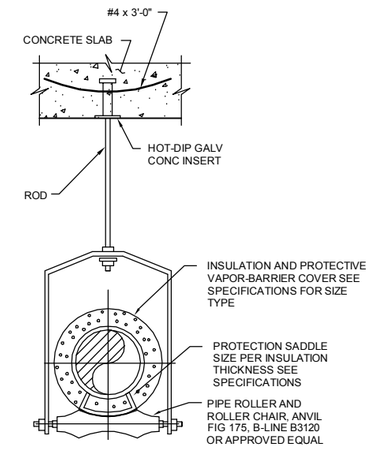

NOTES:

1. WHERE SUBMERGED, BRACKET, 'U'BOLT, LOCKWASHERS, AND ANCHORS TO BE STAINLESS STEEL TYPE 316.
2. MATCH GUIDE, SADDLE, ROLLER, RODS, BOLTS, AND BRACKET MATERIAL TO PIPE MATERIAL.

INSULATED PIPE SUPPORT/GUIDE (2)

N.T.S.

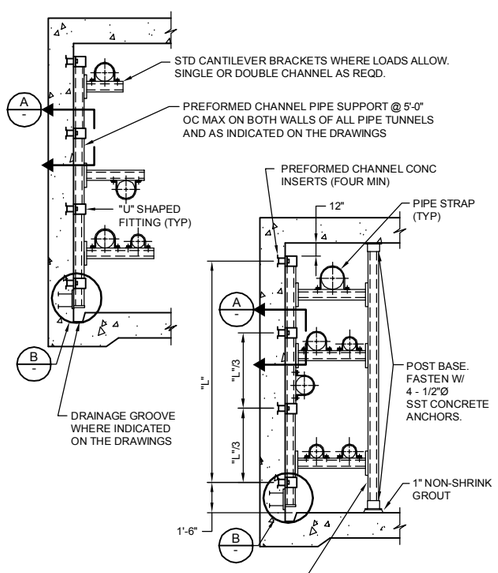

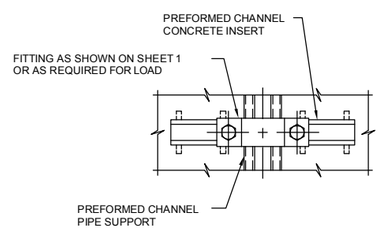

A SECTION

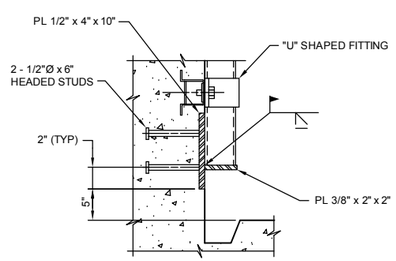

B DETAIL

WALL MOUNTED PREFORMED CHANNEL PIPE SUPPORT (3)

N.T.S.

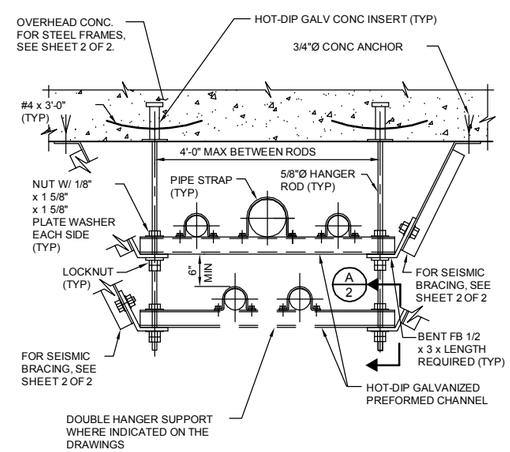

NOTES:

1. HANGER SPACING SHALL BE BASED ON MAXIMUM SPAN ALLOWABLE FOR ANY INDIVIDUAL PIPE.
2. ALL-THREAD ROD SHALL BE USED ONLY FOR DOUBLE SUPPORTS.
3. ALL MATERIALS SHALL BE HOT-DIP GALVANIZED.

DOUBLE ROD PIPE HANGER (4)

N.T.S.

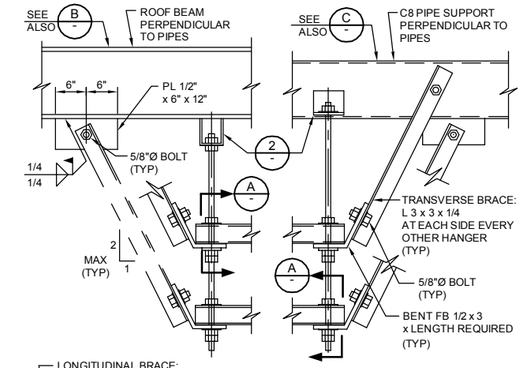

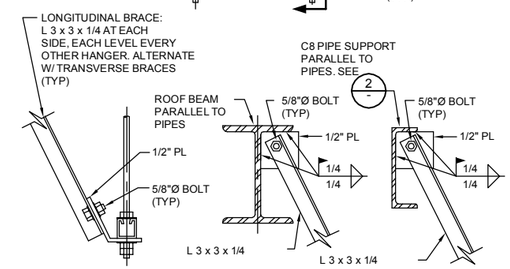

A DETAIL B DETAIL C DETAIL

No.	DATE	REVISIONS	APPROVED

DESIGNED: DAH
DRAWN: TLR
CHECKED: TSD

RBF CONSULTING

carollo

IRVINE RANCH WATER DISTRICT

JIM MEYERHOFER	RCE NO. 48451	PROJECT MANAGER	DATE
CINDY MILLER	RCE NO. 58116	PROJECT MANAGER	DATE
PATRICIA UEMATSU	RCE NO. 36762	PRINCIPAL ENGINEER	DATE

IRVINE RANCH WATER DISTRICT
BAKER WATER TREATMENT PLANT
PROJECT NO. 11218

MECHANICAL TYPICAL DETAILS - III

DRAWING M009

SHEET 291 OF 632

FILENAME: 6232-M009.dwg LAST UPDATED: 01/27/2012 10:16 AM LAST SAVED BY: trea

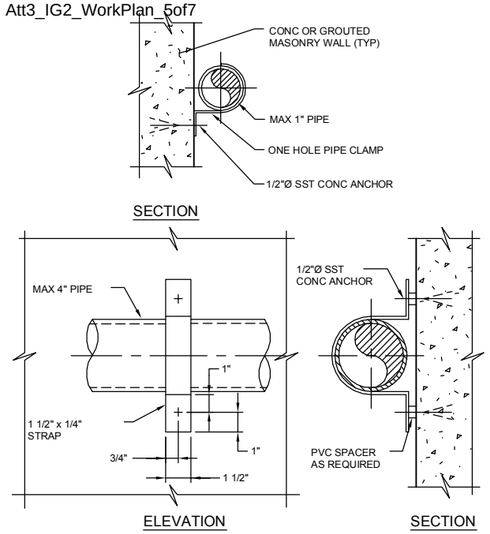

NOTE:

1. IF SUPPORT IS SUBMERGED OR LOCATED BELOW THE TOP OF WALL IN WATER BEARING STRUCTURE, ALL MATERIAL SHALL BE STAINLESS STEEL. IN ALL OTHER AREAS, ALL MATERIAL SHALL BE HOT-DIP GALAVANIZED STEEL UNLESS OTHERWISE INDICATED ON THE DRAWINGS.

CLAMP TYPE LATERAL PIPE SUPPORT (1 / -)

N.T.S.

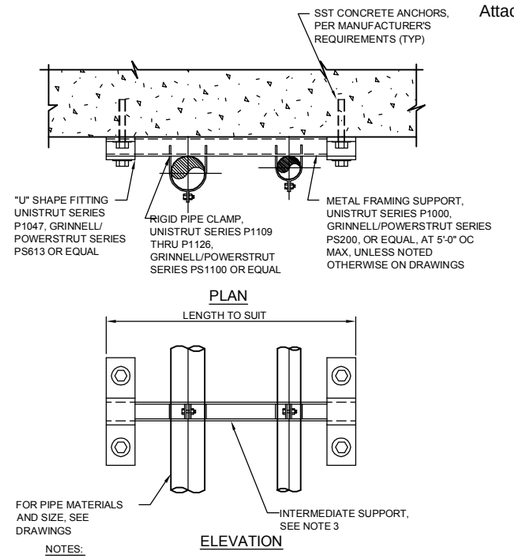

NOTES:

1. VERTICAL INSTALLATION FOR SMALL DIAMETER PIPE (4" MAX) OR ELECTRICAL CONDUIT.
2. SUPPORT VERTICAL PIPING INDEPENDENTLY OF CONNECTED HORIZONTAL PIPING. SUPPORT VERTICAL PIPES AT EVERY [OTHER] FLOOR. WHEREVER POSSIBLE, LOCATE RISER CLAMPS DIRECTLY BELOW PIPE COUPLINGS OR SHEAR LUGS. FOR CARRIER PIPE RISER RUNS GREATER THAN 15'-0" PROVIDE AND INSTALL COUPLINGS EVERY 10 FEET.

FLUSH MOUNTED PIPE (RISER) SUPPORT (2 / -)

N.T.S.

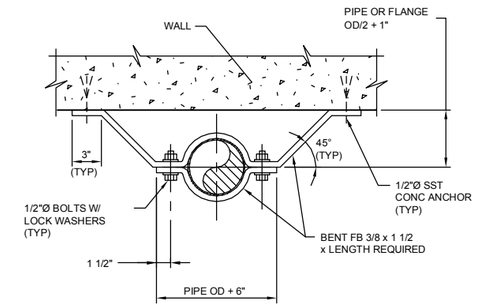

NOTE:

1. IF SUPPORT IS SUBMERGED OR LOCATED BELOW THE TOP OF WALL IN WATER BEARING STRUCTURE, ALL MATERIAL SHALL BE TYPE 316 STAINLESS STEEL. IN ALL OTHER AREAS, ALL MATERIAL SHALL BE HOT-DIP GALAVANIZED STEEL UNLESS OTHERWISE INDICATED ON THE DRAWINGS.

VERTICAL PIPE SWAY BRACE (3 / -)

N.T.S.

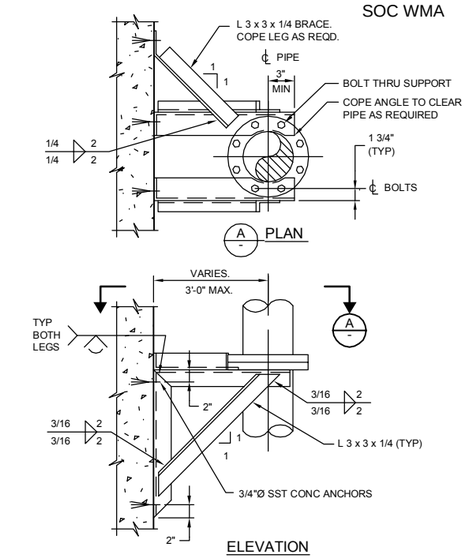

NOTE:

1. **HOT-DIP GALVANIZE SUPPORT AFTER FABRICATION.**

ANGLE TYPE VERTICAL PIPE SUPPORT (4 / -)

N.T.S.

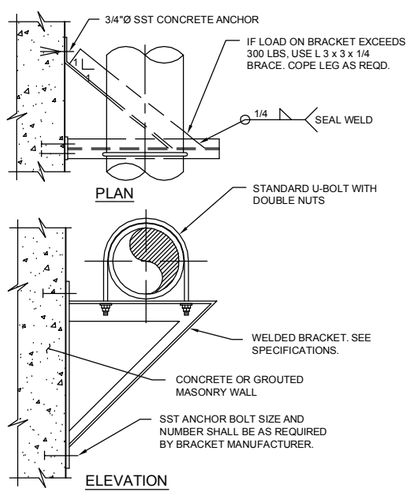

NOTES:

1. HOT-DIP GALVANIZE SUPPORT AFTER FABRICATION.
2. ISOLATE ALL COPPER PIPE W/ PVC TAPE.

ANGLE TYPE LATERAL PIPE SUPPORT (5 / -)

N.T.S.

PIPE SIZE	
"D"	"A"
4	2
6	3
8	4
10	4
12	6

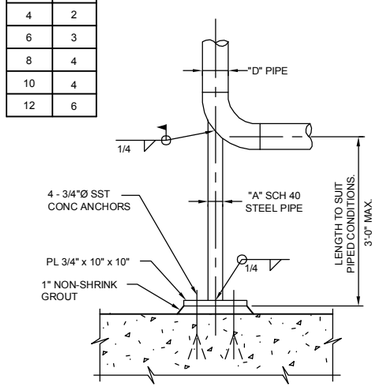

NOTE:

1. HOT-DIP GALVANIZE SUPPORT AFTER FABRICATION.

STEEL PIPE ELBOW SUPPORT (6 / -)

N.T.S.

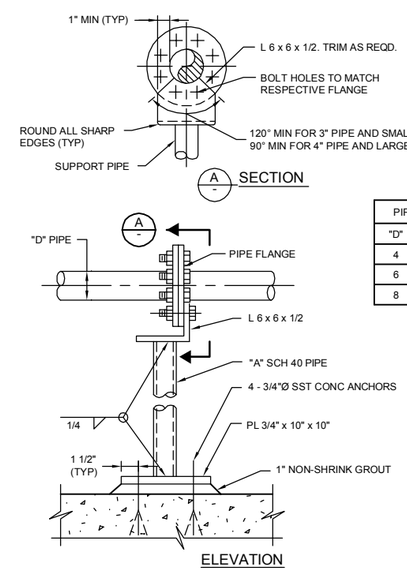

PIPE SIZE	
"D"	"A"
4	2
6	2 1/2
8	4

NOTE:

1. HOT-DIP GALVANIZE SUPPORT AFTER FABRICATION.

PIPE SUPPORT TO FLANGE (7 / -)

N.T.S.

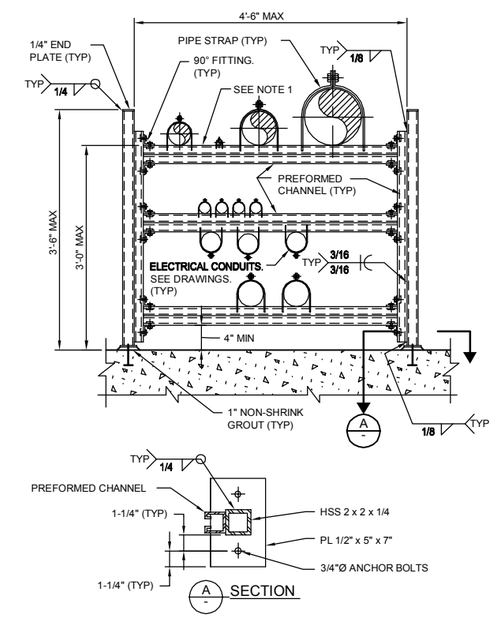

NOTES:

1. HOT-DIP GALV SUPPORT COLUMN ASSEMBLIES AFTER FABRICATION.

PIPE RACK (8 / -)

N.T.S.

FILENAME: 6232-M010.dwg

LAST UPDATED: 01/27/2012 10:15 AM

LAST SAVED BY: trea

No.	DATE	REVISIONS	APPROVED

DESIGNED: DAH
DRAWN: TLR
CHECKED: TSD

RBF CONSULTING

carollo

IRVINE RANCH WATER DISTRICT

JIM MEYERHOFER	RCE NO. 48451	PROJECT MANAGER	DATE
CINDY MILLER	RCE NO. 58116	PROJECT MANAGER	DATE
PATRICIA UEMATSU	RCE NO. 36762	PRINCIPAL ENGINEER	DATE

IRVINE RANCH WATER DISTRICT
BAKER WATER TREATMENT PLANT
PROJECT NO. 11218

MECHANICAL TYPICAL DETAILS - IV

DRAWING **M010**

SHEET **292** OF **632**

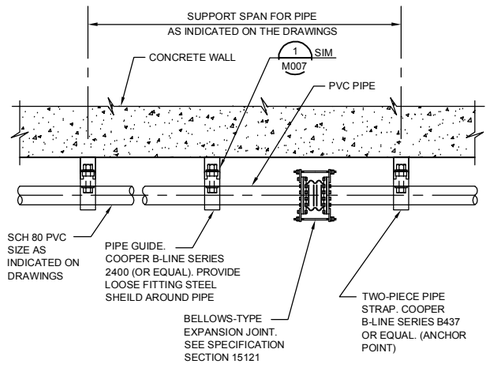

PLAN

NOTES:

1. REFER TO SPECIFICATION SECTION 15121 FOR MAXIMUM EXPANSION JOINT SPACING, AND MINIMUM AXIAL MOVEMENT, AND PROPER LOCATIONS OF ANCHORS AND GUIDES.

PVC EXPANSION JOINT (CIP SERVICE) 1/-

N.T.S.

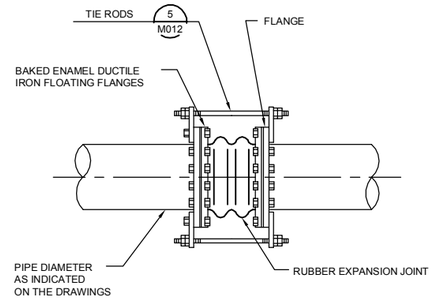

RUBBER EXPANSION JOINTS FOR DIP 1/-

N.T.S.

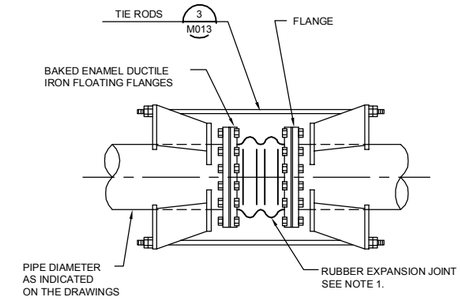

NOTES:

1. 6"Ø DIAMETER SLEEVES AND SMALLER SHALL BE SCHEDULE 40 STEEL PIPE OR SCHEDULE 80 PVC PIPE.
2. SLEEVES LARGER THAN 6"Ø SHALL BE 1/4" THICK STEEL PIPE.
3. STEEL SLEEVE SHALL BE HOT-DIP GALVANIZED AFTER FABRICATION.
4. SLEEVES FOR ELECTRICAL CONDUIT SHALL BE SCHEDULE 80 PVC.

RUBBER EXPANSION JOINTS FOR STEEL PIPE 3/-

N.T.S.

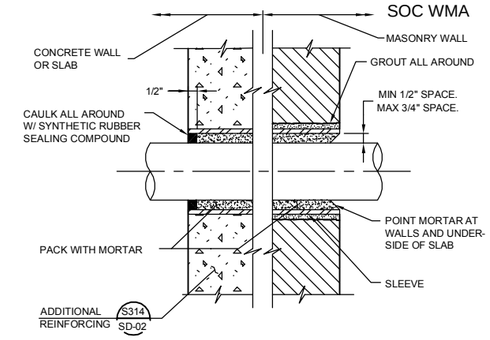

NOTES:

1. 6"Ø DIAMETER SLEEVES AND SMALLER SHALL BE SCHEDULE 40 STEEL PIPE OR SCHEDULE 80 PVC PIPE.
2. SLEEVES LARGER THAN 6"Ø SHALL BE 1/4" THICK STEEL PIPE.
3. STEEL SLEEVE SHALL BE HOT-DIP GALVANIZED AFTER FABRICATION.
4. SLEEVES FOR ELECTRICAL CONDUIT SHALL BE SCHEDULE 80 PVC.

SLEEVE INSTALLATION THROUGH DRY WALLS AND FLOOR SLABS 4/-

N.T.S.

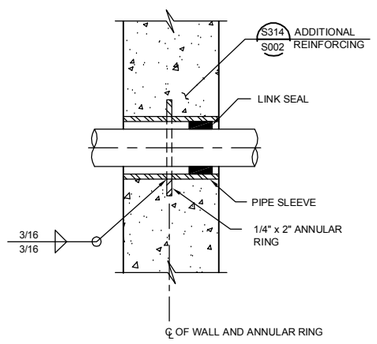

NOTES:

1. 6"Ø SLEEVES AND SMALLER SHALL BE SCH 40 STL PIPE.
2. SLEEVES LARGER THAN 6"Ø SHALL BE 1/4" THICK STL PIPE.
3. IN WALLS THICKER THAN 12", LINK SEAL SHALL BE INSTALLED AT BOTH ENDS OF WALL SLEEVE. SLEEVE DIAMETER SHALL BE PER LINK SEAL MANUFACTURER'S RECOMMENDATION.
4. SLEEVE SHALL BE HOT-DIP GALVANIZED AFTER FABRICATION.

SLEEVE INSTALLATION THROUGH WALLS AND FLOOR SLABS 5/-

N.T.S.

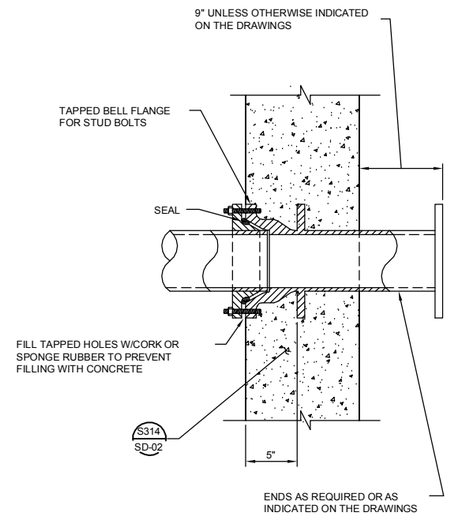

DIP WALL PIPE 6/-

N.T.S.

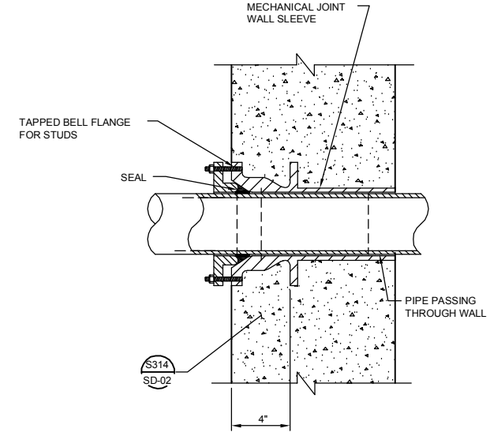

DIP PIPE SLEEVE 7/-

N.T.S.

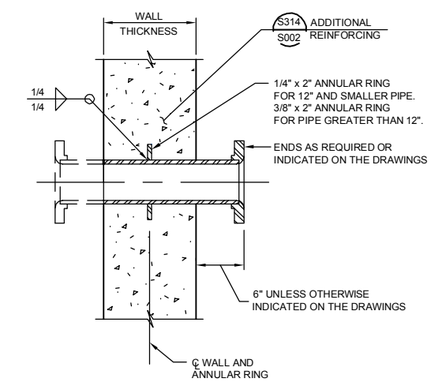

NOTES:

1. THICKNESS OF THIMBLE PIPE TO MATCH PIPE THICKNESS. MINIMUM THICKNESS OF 1/4".
2. LINING TO MATCH PIPE LINING MATERIALS.
3. EXPOSED THIMBLE SURFACES TO BE COATED PER SPECIFICATION SECTION 09900.

WALL THIMBLE FOR STEEL PIPE 8/-

N.T.S.

6232-M011.dwg 01/27/2012 11:07 AM chess

No.	DATE	REVISIONS	APPROVED

DESIGNED: DAH
DRAWN: TLR
CHECKED: TSD

RBF CONSULTING

carollo

IRVINE RANCH WATER DISTRICT

JIM MEYERHOFER	RCE NO. 48451	PROJECT MANAGER	DATE
CINDY MILLER	RCE NO. 58116	PROJECT MANAGER	DATE
PATRICIA UEMATSU	RCE NO. 36762	PRINCIPAL ENGINEER	DATE

IRVINE RANCH WATER DISTRICT
BAKER WATER TREATMENT PLANT
PROJECT NO. 11218

MECHANICAL
TYPICAL DETAILS - V

DRAWING
M011
SHEET
293 OF 632

Attachment 3

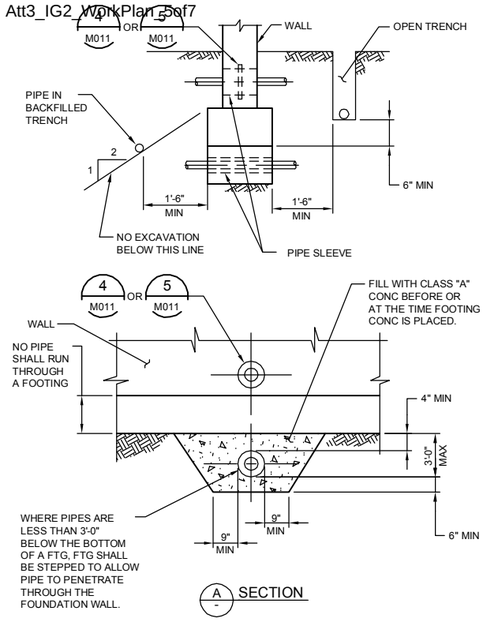

PIPE THRU OR ADJACENT TO FOOTING AND PIPE THROUGH WALL (1)

N.T.S.

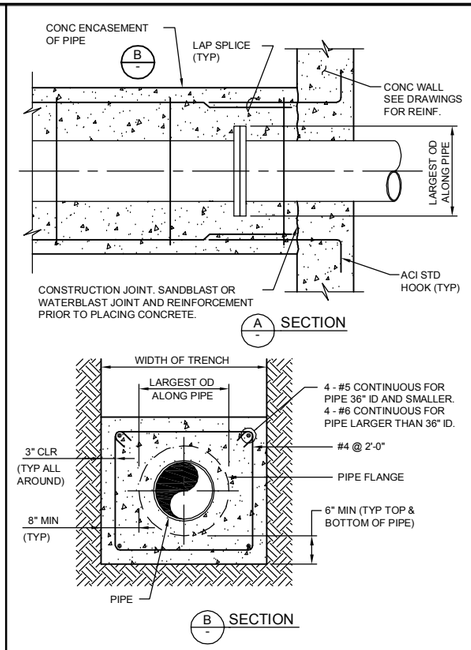

NOTES:

1. TYPE OF PIPE AND TYPE OF PIPE JOINT OR COUPLER AS INDICATED ON THE DRAWINGS.
2. WHERE THE PIPE AND ENCASEMENT EXTENDS OUT FROM UNDER A STRUCTURE, THE BOTTOM EDGE OF THE END OF THE ENCASEMENT SHOULD LIE OUTSIDE A 1 TO 1 LINE DOWN FROM THE BOTTOM EDGE OF THE FOUNDATION.
3. USE TYPE K OR Ksp CONCRETE PER SPECIFICATION 03001.

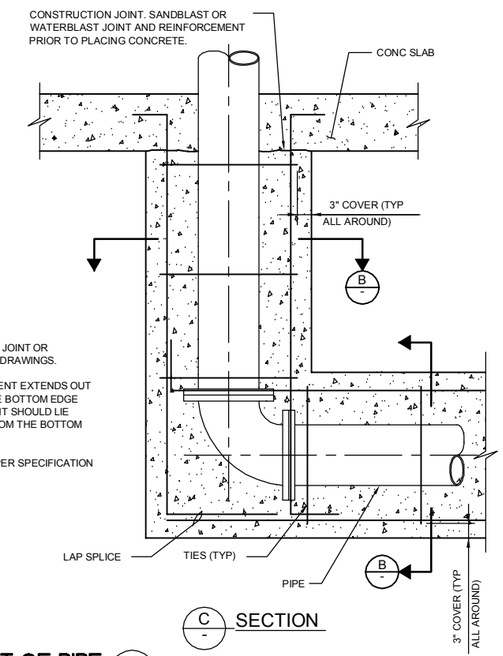

CONCRETE ENCASEMENT OF PIPE (2)

N.T.S.

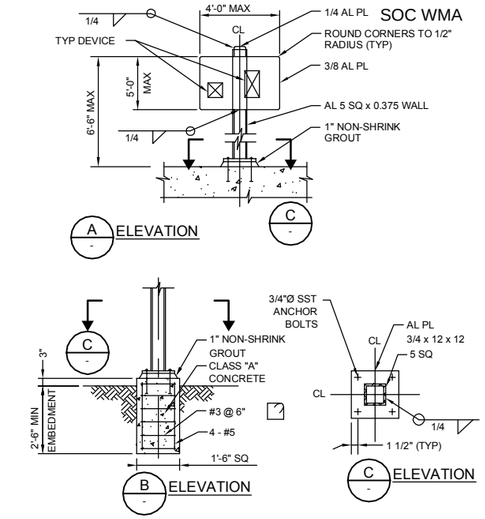

NOTES:

1. WHERE SEPARATE FOUNDATION IS REQD, SEE
2. COAT ALUMINUM SURFACES IN CONTACT W/ CONCRETE PER SPECS.
3. USE SST FASTENERS FOR MOUNTING DEVICES.
4. WEIGHT OF DEVICE(S) SHALL NOT EXCEED 300 POUNDS.

DEVICE AND SUPPORT MOUNTING (3)

N.T.S.

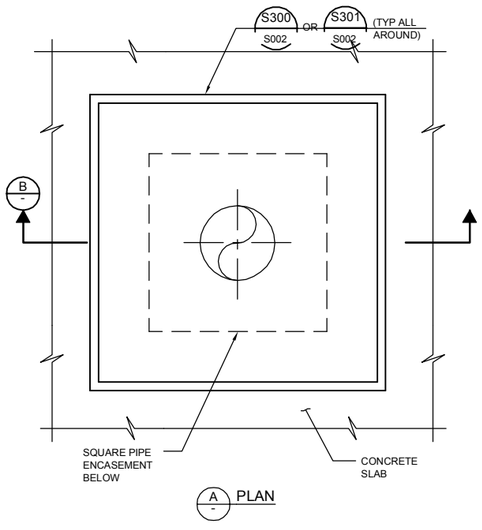

NOTE:

1. TYPE OF PIPE AND TYPE OF PIPE JOINT AS INDICATED ON THE DRAWINGS.

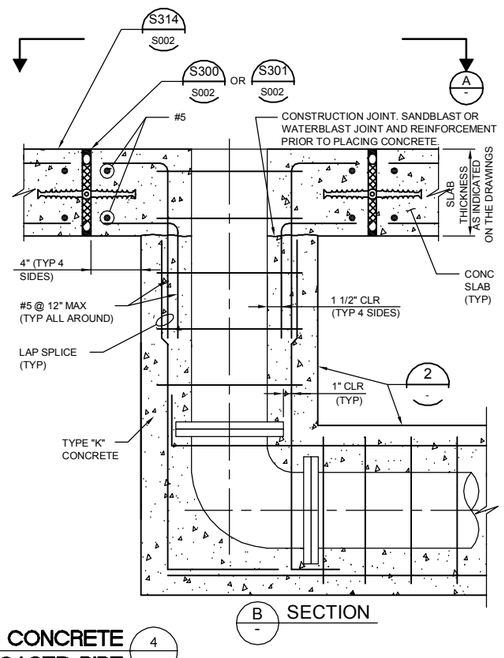

SLAB PENETRATION FOR CONCRETE ENCASED PIPE (4)

N.T.S.

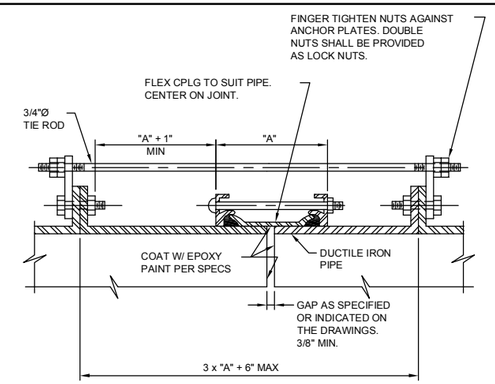

ROD SCHEDULE FOR DIP		
PIPE THRUST. SEE NOTE 2.	TYPE OF CONNECTION	NO. OF RODS
0-6,000#	I	2
6,001-12,000#	II	2
12,001-18,000#	II	3
18,001-24,000#	II	4
24,001-30,000#	II	5

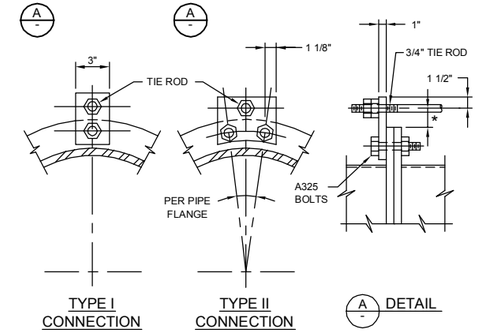

NOTES:

1. ALL EXPOSED FLEXIBLE COUPLINGS SHALL HAVE TIE RODS UNLESS SPECIFICALLY INDICATED OTHERWISE ON THE DRAWINGS.
2. PIPE THRUST SHALL BE BASED ON TEST PRESSURE.
3. PIPE THRUST = 0.7854 x D^2 x TEST PRESSURE, WHERE D IS PIPE OD.
4. MINIMUM TIE ROD YIELD 48,000 PSI.
5. FOR THRUSTS GREATER THAN 30,000 POUNDS, ADD ONE 3/4 INCH DIAMETER ROD FOR EVERY 6,000 POUNDS INCREASE IN THRUST.
6. ALL ROD CONNECTIONS SHALL BE TYPE II FOR THRUSTS GREATER THAN 30,000 POUNDS.
7. GRIND ALL CORNERS SMOOTH.
8. *AS REQD TO CLEAR FLEX CPLG. 3/4" MIN AND 1 1/2" MAX.

DIP FLEXIBLE COUPLING TIE DOWN (5)

N.T.S.

FILENAME: 6232-M012.dwg
LAST UPDATED: 01/27/2012 11:06 AM
LAST SAVED BY: chess

No.	DATE	REVISIONS	APPROVED

DESIGNED: DAH
DRAWN: TLR
CHECKED: TSD

RBF CONSULTING
carollo
IRVINE RANCH WATER DISTRICT

JIM MEYERHOFER	RCE NO. 48451	PROJECT MANAGER	DATE
CINDY MILLER	RCE NO. 58116	PROJECT MANAGER	DATE
PATRICIA UEMATSU	RCE NO. 36762	PRINCIPAL ENGINEER	DATE

IRVINE RANCH WATER DISTRICT
BAKER WATER TREATMENT PLANT
PROJECT NO. 11218

MECHANICAL
TYPICAL DETAILS - VI

DRAWING M012
SHEET 294 OF 632

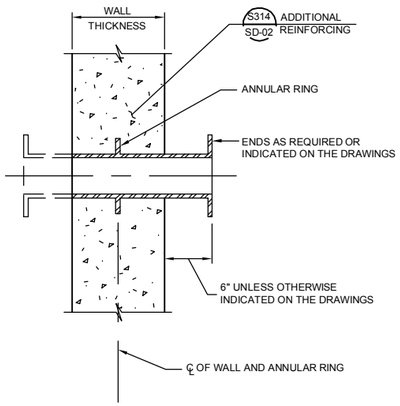

NOTE:

1. PIPE MATERIAL, THICKNESS, AND COATINGS SHALL BE AS SPECIFIED IN SPECIFICATION 15052 AND ASSOCIATED REFERENCES.

WALL THIMBLE FOR DIP (1 / -)

N.T.S.

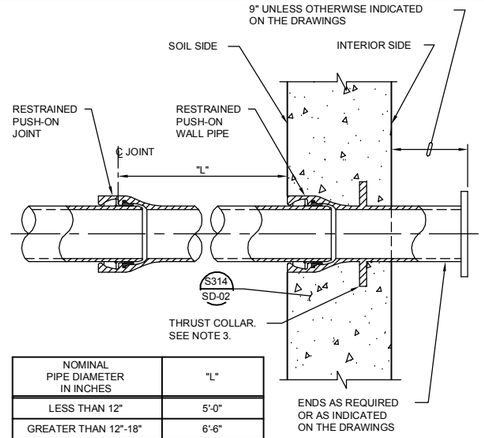

NOMINAL PIPE DIAMETER IN INCHES	"L"
LESS THAN 12"	5'-0"
GREATER THAN 12"-18"	6'-6"
GREATER THAN 18"-24"	7'-9"
GREATER THAN 24"-36"	12'-9"
GREATER THAN 36"	STANDARD PIPE LENGTH

NOTES:

1. FLEXIBLE CONNECTION IS DESIGNED TO ACCOMMODATE SETTLEMENT AND EARTHQUAKE MOVEMENT.
2. PIPES SHALL BE INSTALLED STRAIGHT WITHOUT HORIZONTAL OR VERTICAL OFFSET. DO NOT USE JOINT ROTATION TO MAKE UP MISALIGNED PIPE.
3. WALL PIPE WITH WEEP RING (THRUST COLLAR) SHALL BE CAPABLE OF RESISTING THRUST.

RESTRAINED SIP FLEXIBLE CONNECTION AT WALL PENETRATION (2 / -)

N.T.S.

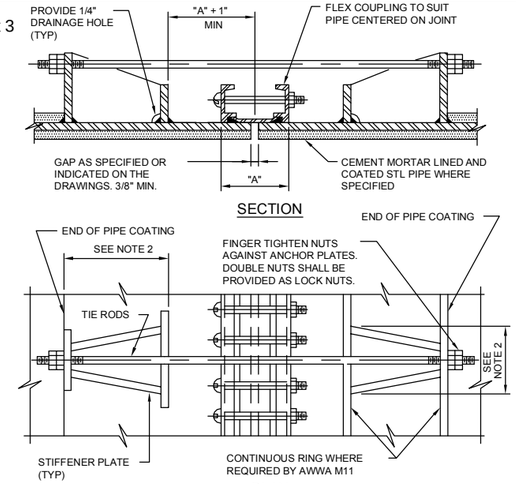

NOTES:

1. ALL EXPOSED FLEXIBLE COUPLINGS SHALL HAVE TIE RODS UNLESS SPECIFICALLY INDICATED OTHERWISE ON THE DRAWINGS.
2. DESIGN SHALL BE BASED ON TEST PRESSURE.
3. ANCHOR LUGS AND TIE RODS FOR STEEL PIPE SHALL BE DESIGNED BY PIPE MANUFACTURER IN ACCORDANCE WITH AWWA M11 STEEL PIPE MANUAL.
4. GRIND ALL CORNERS SMOOTH.
5. COAT ALL EXPOSED STL SURFACES WITH EPOXY PAINT PER SPECIFICATIONS.

STEEL PIPE FLEXIBLE COUPLING TIE DOWN (3 / -)

N.T.S.

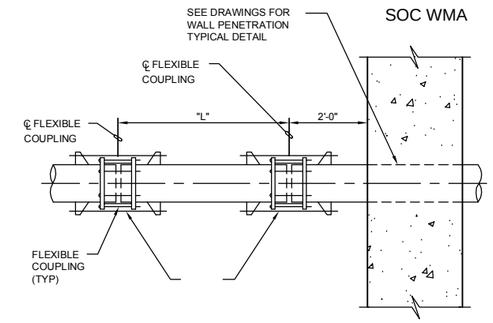

NOMINAL PIPE DIAMETER IN INCHES	"L"
LESS THAN 12"	3'-0"
GREATER THAN 12" TO 31"	5'-0"
GREATER THAN 31" TO 42"	5'-6"
GREATER THAN 42" TO 54"	6'-6"

NOTE:

1. PIPES SHALL BE INSTALLED STRAIGHT WITHOUT HORIZONTAL OR VERTICAL OFFSET. DO NOT USE JOINT ROTATION TO MAKE UP MISALIGNED PIPE.

RESTRAINED STEEL PIPE FLEXIBLE CONNECTION AT WALL PENETRATION (4 / -)

N.T.S.

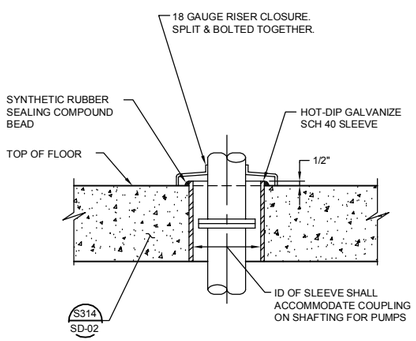

SLEEVE INSTALLATION THRU DRY FLOOR SLABS WITHOUT PACKING (5 / -)

N.T.S.

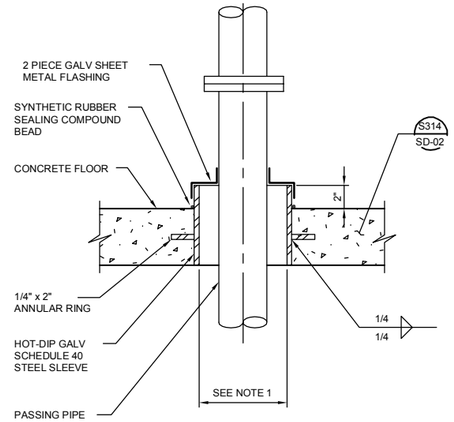

NOTE:

1. INSIDE DIAMETER OF SLEEVE SHALL ACCOMMODATE COUPLING ON SHAFTING FOR PUMPS.

FLOOR SLEEVE CLOSURE SEAL (6 / -)

N.T.S.

NOT USED (7 / -)

N.T.S.

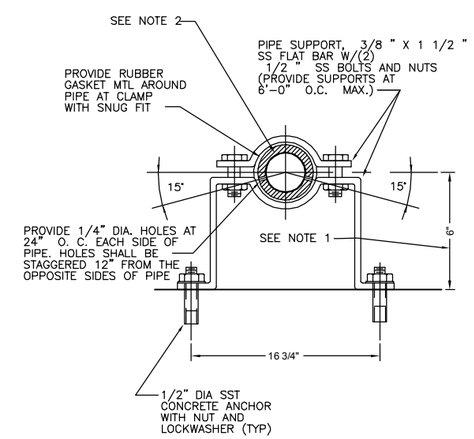

NOTES:

1. FOR 6" DIA PIPE ONLY, SEE DRAWINGS FOR PIPE SIZE AND ADJUST DIMENSION AS REQUIRED.
2. SEE DRAWINGS FOR PIPE SIZE AND MATERIAL

CAW FABRICATED PIPE SUPPORT (8 / -)

N.T.S.

LAST SAVED BY: tres LAST UPDATED: 01/27/2012 10:12 AM FILENAME: 6232-M013.dwg

No.	DATE	REVISIONS	APPROVED

DESIGNED: DAH
DRAWN: TLR
CHECKED: TSD

RBF CONSULTING | carollo | IRVINE RANCH WATER DISTRICT

JIM MEYERHOFER	RCE NO. 48451	PROJECT MANAGER	DATE
CINDY MILLER	RCE NO. 58116	PROJECT MANAGER	DATE
PATRICIA UEMATSU	RCE NO. 36762	PRINCIPAL ENGINEER	DATE

IRVINE RANCH WATER DISTRICT
BAKER WATER TREATMENT PLANT
PROJECT NO. 11218

MECHANICAL TYPICAL DETAILS - VII

DRAWING M013

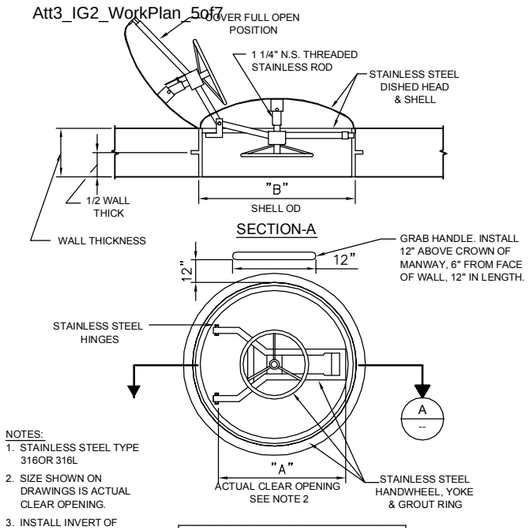

NOTES:
1. STAINLESS STEEL TYPE 316OR 316L
2. SIZE SHOWN ON DRAWINGS IS ACTUAL CLEAR OPENING.
3. INSTALL INVERT OF WALL MANYWAY OPENING 18" ABOVE FINISHED FLOOR, OR AS INDICATED ON DRAWINGS.

MANWAY DIMENSIONS IN INCHES (mm)		
SIZE	"A"	"B"
30 (762)	30 (762)	37 (940)

WALL MANWAY (1/–)
N.T.S.

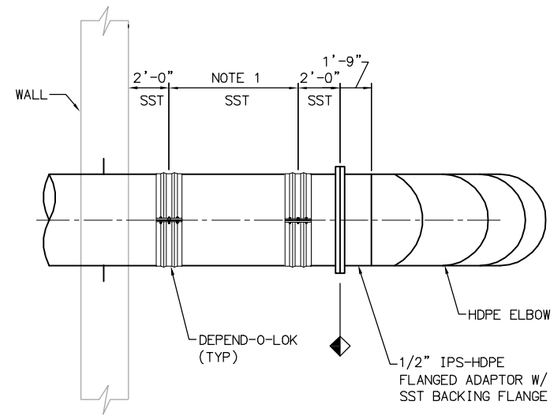

NOTES:

1. DISTANCE TO BE DETERMINED BY COUPLING MANUFACTURER TO PROVIDE DIFFERENTIAL SETTLEMENT OF 1-INCH BETWEEN PIPE AND BUILDING.

SST - HDPE TRANSTION DETAIL (2/–)
N.T.S.

NOT USED (3/–)
N.T.S.

NOT USED (4/–)
N.T.S.

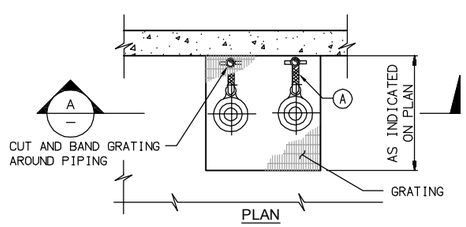

(A) 2"DIA STAINLESS STEEL REINFORCED PVC HOSE
(B) STAINLESS HOSE CLAMP
(C) 2" SCHEDULE 80 PVC PIPE AND FITTINGS
(D) 2" SCHEDULE 80 PVC ADAPTER, SLIP X M.I.P.T.
(E) 2" BRONZE SWING CHECK VALVE, F.I.P.T. BOTH ENDS
(F) 2" SCH 80 PVC UNION, SLIP X SLIP
(G) 2" BRONZE PLUG CHECK VALVE, F.I.P.T. BOTH ENDS

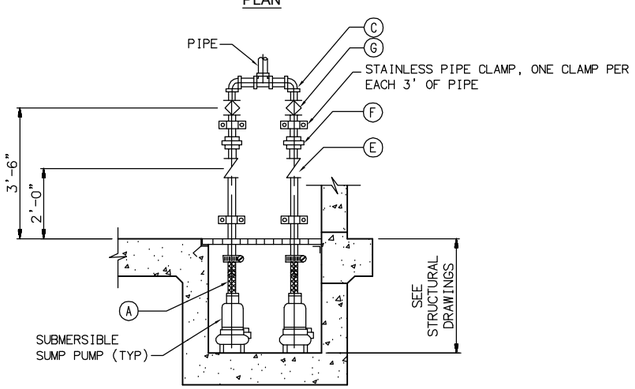

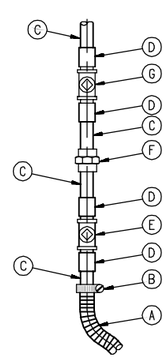

DUPLEX SUBMERSIBLE SUMP PUMP (5/–)
N.T.S.

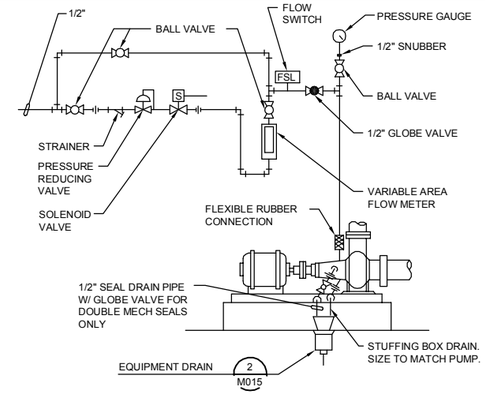

NOTES:

1. THIS INSTALLATION IS TO BE USED AT ALL PUMPS WITH WATER SEAL/FLUSH.
2. FLOW METER CAPACITY AND PIPING SYSTEM SHALL MEET PUMP AND SEAL MANUFACTURERS REQUIREMENTS.
3. UNLESS SPECIFIED OTHERWISE, ALL PIPING SHALL BE GSP.
4. EQUIPMENT WALL MOUNTED IF NEAREST WALL IS WITHIN TEN FEET OF PUMP. IF PUMP IS NOT WITHIN 10 FEET OF WALL, MOUNT ON ALUMINUM STAND. SEE (3/M012) FOR ALUMINUM STAND MOUNTING DETAIL.
5. WHERE A DRIP PAN IS SPECIFIED AND/OR PROVIDED ON THE PUMP BASE, A SEPARATE DRAIN LINE TO THE EQUIPMENT DRAIN SHALL BE PROVIDED.
6. WHEN AN INDICATING FLOW SWITCH IS USED, THE VARIABLE AREA FLOW METER SHALL BE DELETED.

WATER SEAL PIPING (7/–)
N.T.S.

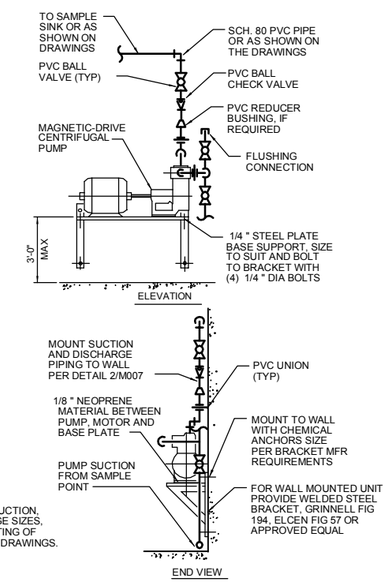

NOTES:

1. FOR PUMP SUCTION, DISCHARGE SIZES, AND ROUTING OF PIPE, SEE DRAWINGS.

SAMPLE PUMP (8/–)
N.T.S.

FILENAME: 6232-M014.dwg
LAST UPDATED: 01/27/2012 10:01 AM
LAST SAVED BY: tree

No.	DATE	REVISIONS	APPROVED

DESIGNED: DAH
DRAWN: TLR
CHECKED: TSD

RBF CONSULTING
carollo
IRVINE RANCH WATER DISTRICT

JIM MEYERHOFER	RCE NO. 48451	PROJECT MANAGER	DATE
CINDY MILLER	RCE NO. 58116	PROJECT MANAGER	DATE
PATRICIA UEMATSU	RCE NO. 36762	PRINCIPAL ENGINEER	DATE

IRVINE RANCH WATER DISTRICT
BAKER WATER TREATMENT PLANT
PROJECT NO. 11218

MECHANICAL
TYPICAL DETAILS - VIII

DRAWING M014
SHEET 296 OF 632

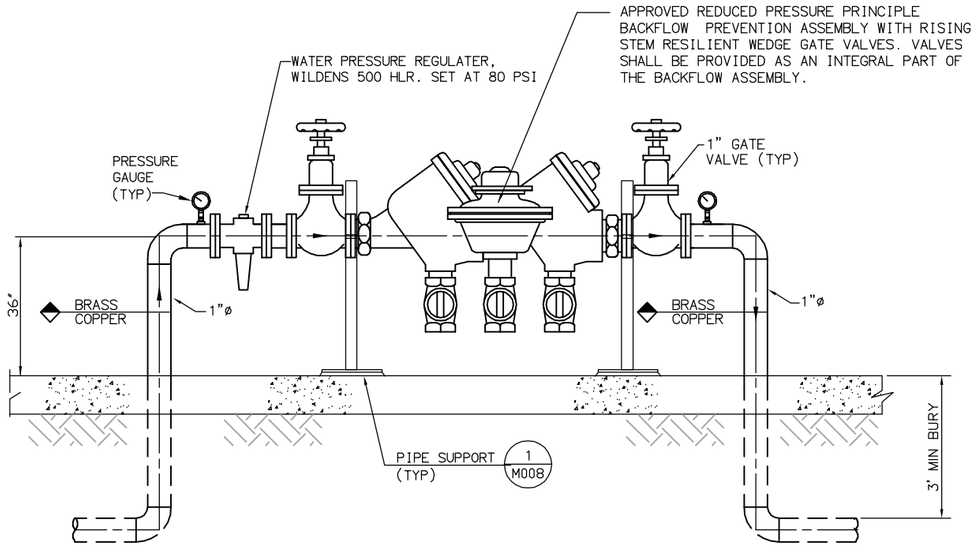

REDUCED PRESSURE BACKFLOW PREVENTER (1 / –)

NTS

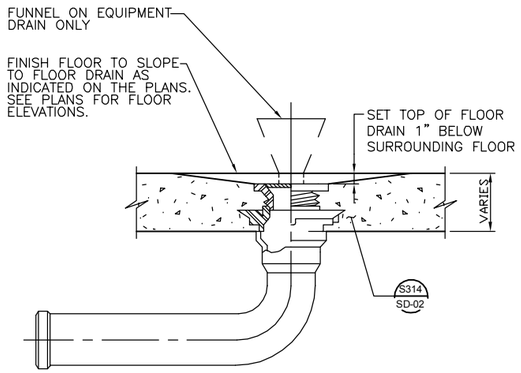

NOTE:

1. PROVIDE 12" RADIUS SLOPE TO EQUIPMENT DRAINS WHERE FLOOR DOES NOT SLOPE TO DRAIN.

FLOOR DRAIN OR EQUIPMENT DRAIN (2 / –)

N.T.S.

NOT USED (3 / –)

N.T.S.

NOT USED (4 / –)

N.T.S.

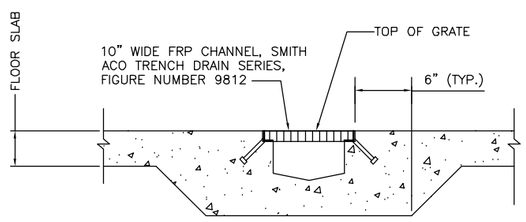

TRENCH DRAIN (5 / –)

N.T.S.

NOT USED (6 / –)

N.T.S.

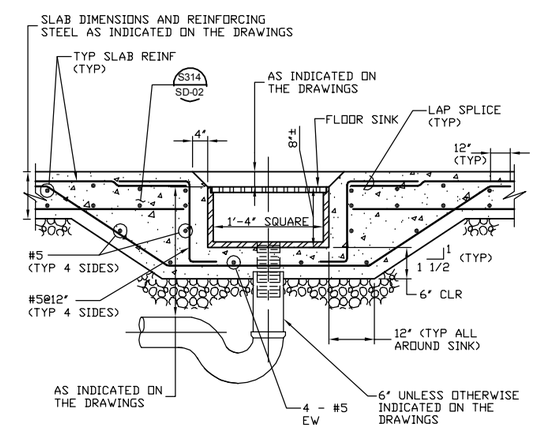

FLOOR SINK (7 / –)

N.T.S.

FILENAME: 6232-M015.dwg
LAST UPDATED: 01/27/2012 09:56 AM
LAST SAVED BY: treo

No.	DATE	REVISIONS	APPROVED

DESIGNED: DAH
DRAWN: TLR
CHECKED: TSD

RBF CONSULTING

carollo

IRVINE RANCH WATER DISTRICT

JIM MEYERHOFER	RCE NO. 48451	PROJECT MANAGER	DATE
CINDY MILLER	RCE NO. 58116	PROJECT MANAGER	DATE
PATRICIA UEMATSU	RCE NO. 36762	PRINCIPAL ENGINEER	DATE

IRVINE RANCH WATER DISTRICT
BAKER WATER TREATMENT PLANT
PROJECT NO. 11218

MECHANICAL TYPICAL DETAILS - IX

DRAWING **M015**

SHEET **297** OF **632**

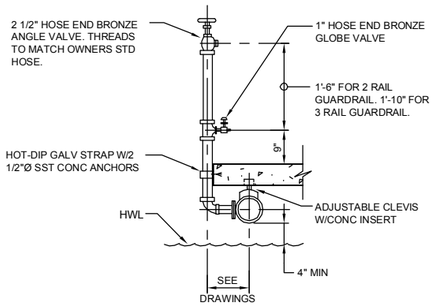

1" AND 2 ½" HOSE VALVE (1 / -)

N.T.S.

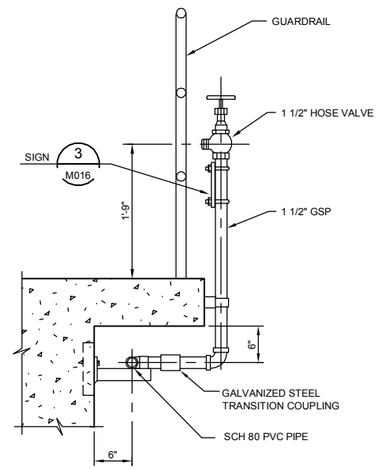

HOSE VALVE RISER (1 / -)

N.T.S.

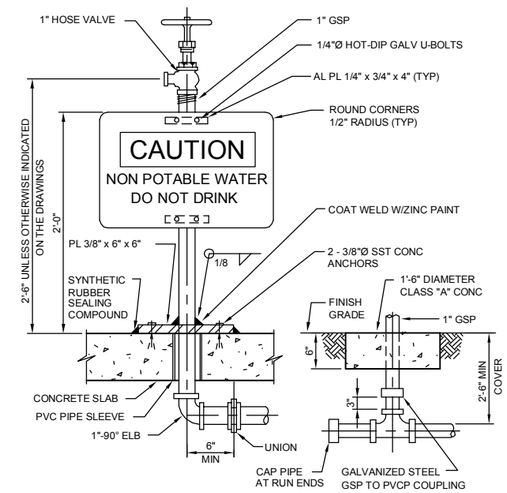

NOTES:

1. SIGN SHALL BE 3/8" THICK PLASTIC RESISTANT TO SUNLIGHT (ULTRAVIOLET) DETERIORATION.
2. SIGN SHALL BE 7" x 10" AND SHALL CONFORM TO THE SPECIFICATIONS.
3. SIGN AS SHOWN IS ROTATED 90° OFF TRUE POSITION. SIGN SHALL BE MOUNTED TO PERMIT EASY READING.
4. INSTALL HOSE RACK, (5 / -) AT EACH HOSE VALVE.

1" HOSE VALVE AND SIGN (3 / -)

N.T.S.

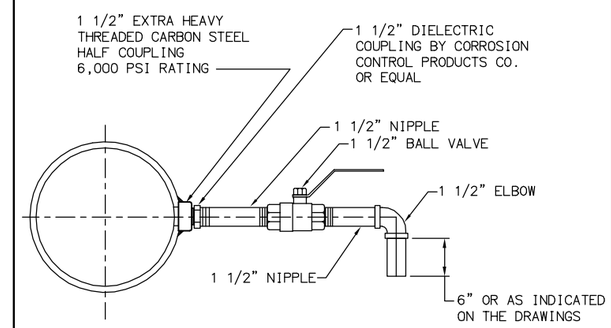

NOTE:

1. SAMPLE PIPE AND FITTINGS SHALL BE 316 SS

SAMPLE CONNECTION (4 / -)

N.T.S.

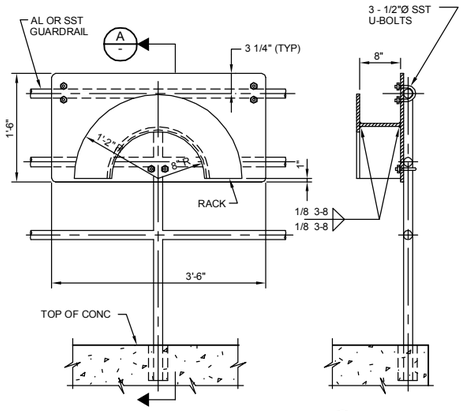

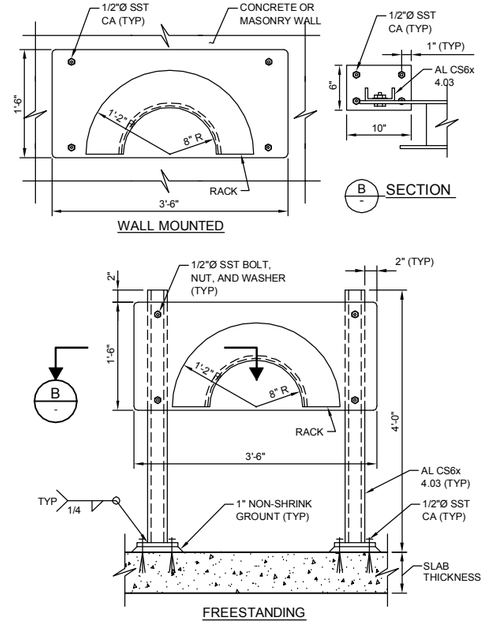

NOTES:

1. HOSE RACK SHALL BE FABRICATED FROM 3/16" ALUMINUM PLATE. ROUND ALL EDGES SMOOTH.
2. HOSE RACKS INSTALLED IN YARD LOCATIONS SHALL BE FREESTANDING A 4'-6" LONG x 2'-0" WIDE x 8" DEEP CONCRETE PAD W/#5@12" EW CENTERED.
3. WALL MOUNTED HOSE RACKS ON MASONRY WALL SHALL BE FASTEN TO GROUTED CELLS.

HOSE RACK (5 / -)

N.T.S.

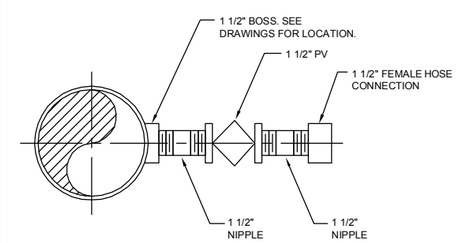

FLUSHING CONNECTION (6 / -)

N.T.S.

NOT USED (7 / C-20)

N.T.S.

FILENAME: 6232-M016.dwg

LAST UPDATED: 01/27/2012 09:56 AM

LAST SAVED BY: trea

No.	DATE	REVISIONS	APPROVED

DESIGNED: DAH
DRAWN: TLR
CHECKED: TSD

RBF CONSULTING

carollo

IRVINE RANCH WATER DISTRICT

JIM MEYERHOFER	RCE NO. 48451	PROJECT MANAGER	DATE
CINDY MILLER	RCE NO. 58116	PROJECT MANAGER	DATE
PATRICIA UEMATSU	RCE NO. 36762	PRINCIPAL ENGINEER	DATE

IRVINE RANCH WATER DISTRICT
BAKER WATER TREATMENT PLANT
PROJECT NO. 11218

MECHANICAL TYPICAL DETAILS - X

DRAWING M016

SHEET 298 OF 632

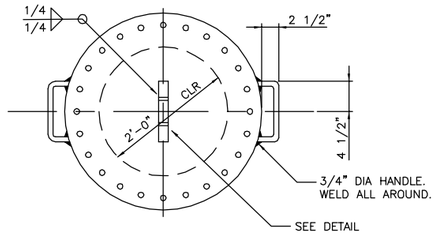

PLAN

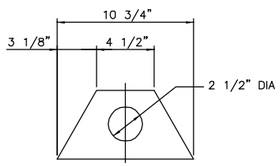

DETAIL

NOTE:
1. PROTECTIVE COATING SAME AS BLIND FLANGE.

BLIND FLANGE ACCESS DOOR (1 / –)
N.T.S.

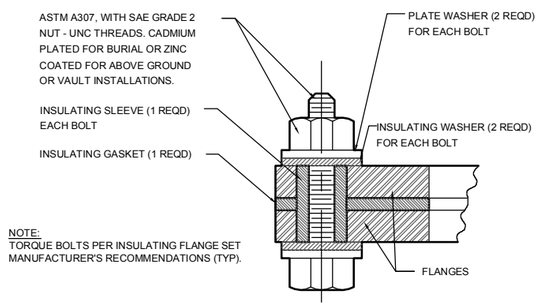

NOTE:
TORQUE BOLTS PER INSULATING FLANGE SET MANUFACTURER'S RECOMMENDATIONS (TYP).

INSULATING FLANGE DETAIL (2 / –)
N.T.S.

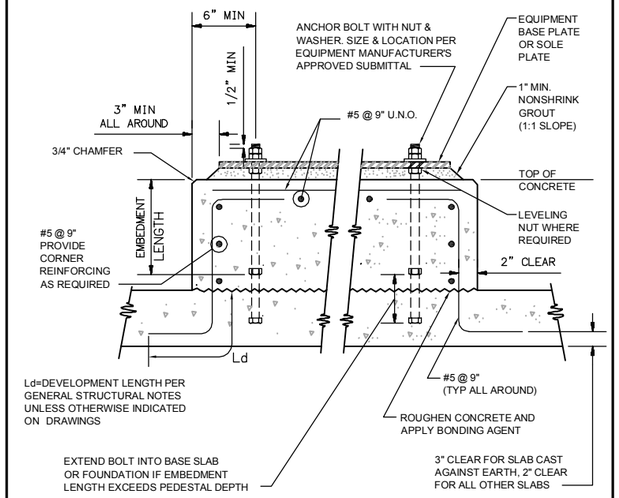

EQUIPMENT PEDSTAL (3 / –)
N.T.S.

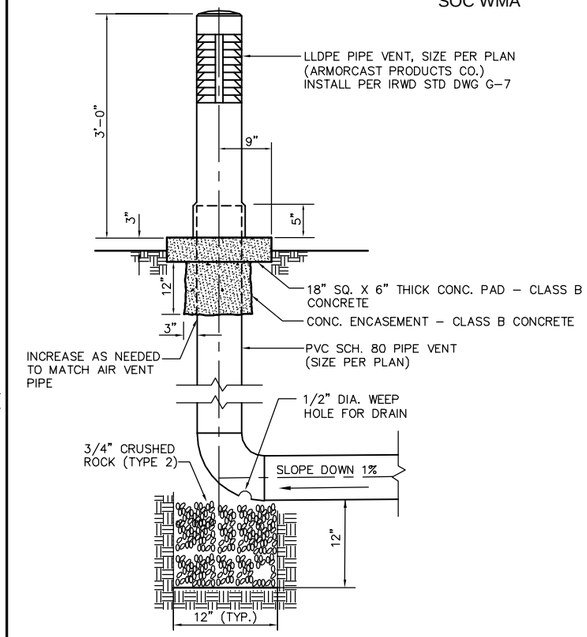

AIR VENT DETAIL (4 / –)
N.T.S.

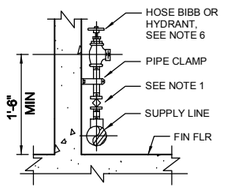

ABOVE SUPPLY PIPELINE

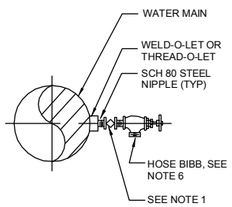

TAP AT SUPPLY PIPELINE

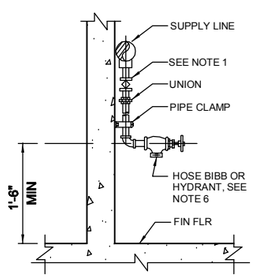

BELOW SUPPLY PIPELINE

ELEVATION - INTERIOR LOCATION

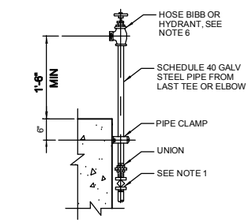

NOT NON-FREEZE
(SEE NOTE 5)

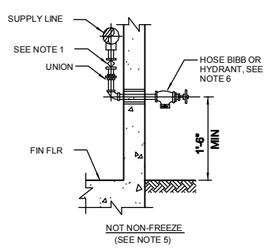

NOT NON-FREEZE
(SEE NOTE 5)

ELEVATION - EXTERIOR LOCATION

HOSE BIBB INSTALLATION (5 / –)
N.T.S.

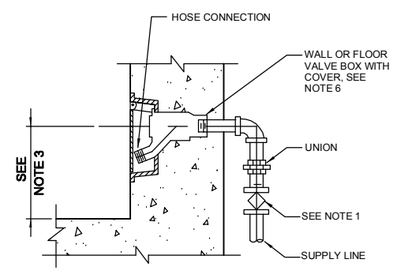

NON-FREEZE
(SEE NOTE 4)

ELEVATION - EXTERIOR LOCATION

NOTES:

1. ALL HOSE BIBBS TO BE CONTROLLED BY INDIVIDUAL ISOLATION VALVES (BALL OR PLUG).
2. PROVIDE WARNING SIGN WHEN USED FOR NON-POTABLE (UTILITY WATER) PER DETAIL 3/M016.
3. INSTALL AT HEIGHT PER LOCAL CODE REQUIREMENTS.
4. FOR ADDITONAL NON-FREEZE YARD HYDRANTS SEE CIVIL DETAILS.
5. FOR COLD AREA INSTALLATION SUPPLY MAIN AND HOSE BIBB SHALL BE DRAINED AND COMPRESSED AIR PURGED TO PREVENT FREEZING.
6. HOSE BIBBS SHALL HAVE INTEGRAL ANTI-SIPHON VALVE.

NOTES:

1. PVC WRAP OR SLEEVE ALL BURIED COPPER TO 6" ABOVE FLOOR
2. PROVIDE 1" X 50 FT. GOODYEAR MODEL NO. 4XR43 WASHDOWN HOSE WITH SOLID BRASS FITTINGS AND SWEEPER NOZZLE. PROVIDE HEAVY DUTY INDUSTRIAL HOSE RACK.
3. HOSE BIBB SHALL HAVE INTEGRAL ANTI-SIPHON VALVE.

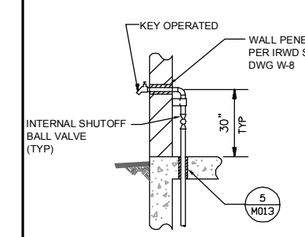

OUTDOOR HOSE BIBB

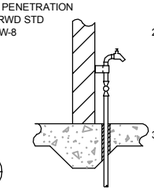

INDOOR HOSE BIBB

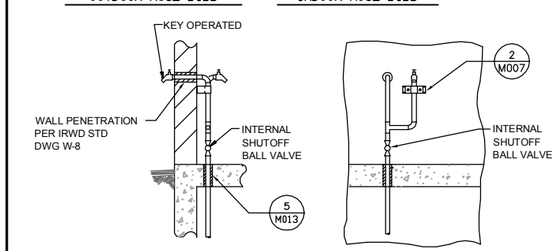

COMBINATION INDOOR/OUTDOOR HOSE BIBB

HOSEBIBB (6 / –)
N.T.S.

FILENAME: 6232-M017.dwg
LAST UPDATED: 01/27/2012 10:46 AM
LAST SAVED BY: chess

No.	DATE	REVISIONS	APPROVED

DESIGNED: DAH
DRAWN: TLR
CHECKED: TSD

RBF CONSULTING

carollo

IRVINE RANCH WATER DISTRICT

JIM MEYERHOFER	RCE NO. 48451	PROJECT MANAGER	DATE
CINDY MILLER	RCE NO. 58116	PROJECT MANAGER	DATE
PATRICIA UEMATSU	RCE NO. 36762	PRINCIPAL ENGINEER	DATE

IRVINE RANCH WATER DISTRICT
BAKER WATER TREATMENT PLANT
PROJECT NO. 11218

MECHANICAL
TYPICAL DETAILS - XI

DRAWING M017

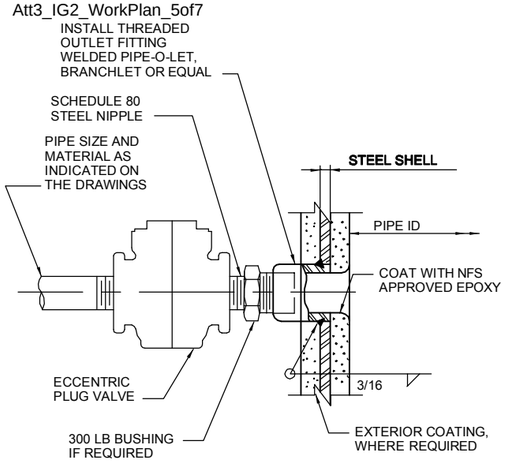

PIPE CONNECTION 2-1/2" AND SMALLER (1 / –)

N.T.S.

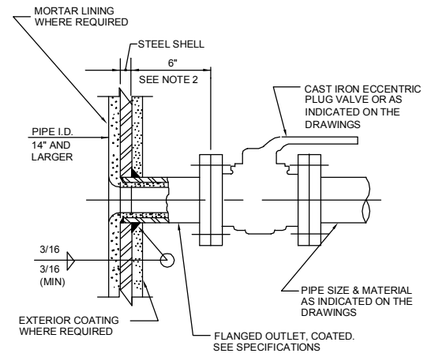

NOTES:

1. FOR HIGH PRESSURE APPLICATION USE WELDED STEEL SADDLE.
2. FOR 36" DIA AND LARGER PIPES USE AWWA STANDARD.

3" AND LARGER CONNECTION (2 / –)

N.T.S.

NOT USED (3 / –)

N.T.S.

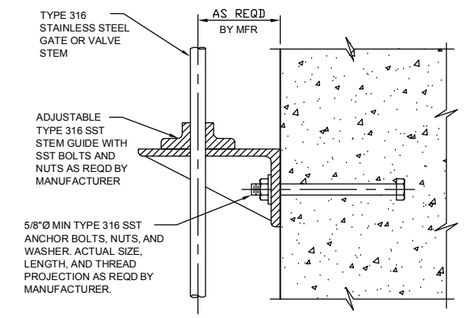

STEM GUIDE (4 / –)

N.T.S.

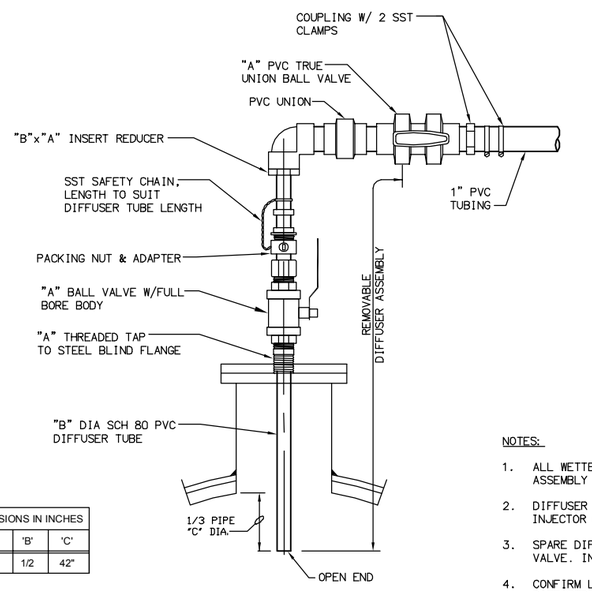

LOCATION	CHEMICAL	G. P. M.	DIMENSIONS IN INCHES		
			'A'	'B'	'C'
VAULT	CDO	11	1	1/2	42"

NOTES:

1. ALL WETTED MATERIALS TO BE PVC EXCEPT PAC DIFFUSER ASSEMBLY BALL VALVE AND COMPRESSION NUTS TO BE SST.
2. DIFFUSER ASSEMBLIES TO BE SAF-T-FLO RETRACTABLE INJECTOR OR EQUAL.
3. SPARE DIFFUSERS TO TERMINATE UPSTREAM SIDE OF BALL VALVE. INSERT PVC PLUG.
4. CONFIRM LENGTH OF DIFFUSER TUBE INTO MAIN WITH DIFFUSER ASSEMBLY.

CHEMICAL DIFFUSER (5 / –)

N.T.S.

NOT USED (6 / –)

N.T.S.

FILENAME: 6232-M018.dwg
LAST UPDATED: 01/27/2012 09:54 AM
LAST SAVED BY: treo

No.	DATE	REVISIONS	APPROVED

DESIGNED: DAH
DRAWN: TLR
CHECKED: TSD

RBF CONSULTING

carollo

IRVINE RANCH WATER DISTRICT

JIM MEYERHOFER	RCE NO. 48451	PROJECT MANAGER	DATE
CINDY MILLER	RCE NO. 58116	PROJECT MANAGER	DATE
PATRICIA UEMATSU	RCE NO. 36762	PRINCIPAL ENGINEER	DATE

IRVINE RANCH WATER DISTRICT
BAKER WATER TREATMENT PLANT
PROJECT NO. 11218

MECHANICAL TYPICAL DETAILS - XII

DRAWING M018

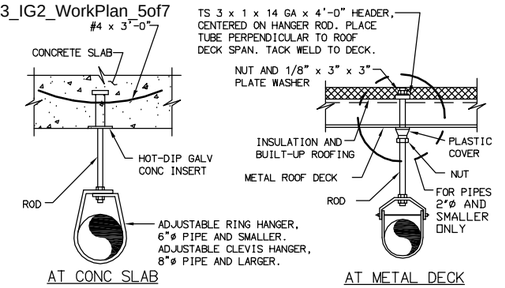

AT CONC SLAB

AT METAL DECK

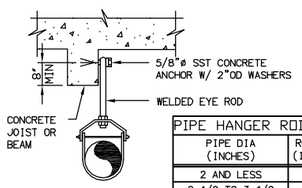

AT CONC JOIST OR BEAM

PIPE HANGER RODS AND SUPPORT SPACING		
PIPE DIA (INCHES)	ROD DIA (INCHES)	MAX SUPPORT SPACING
2 AND LESS	3/8	5 FEET
2 1/2 TO 3 1/2	1/2	10 FEET
4 TO 5	5/8	10 FEET
6	3/4	10 FEET
8	7/8	10 FEET
10	7/8	10 FEET
12	7/8	10 FEET

NOTES:

1. ISOLATE ALL COPPER PIPE FROM SUPPORT WITH PVC TAPE.
2. ALL MATERIALS SHALL BE HOT-DIP GALVANIZED.
3. PROVIDE ADDITIONAL HANGER AT EACH SIDE OF ALL VALVES 4 INCHES AND LARGER.

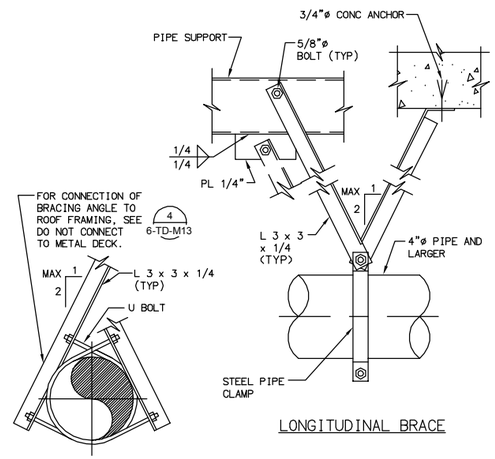

TRANSVERSE BRACE

LONGITUDINAL BRACE

NOTES:

1. MAXIMUM LONGITUDINAL BRACE SPACING = 20'-0".
2. MAXIMUM TRANSVERSE BRACE SPACING = 20'-0".
3. DO NOT CONNECT BRACE TO BOTTOM OF ROOF BEAM OR C8 PIPE SUPPORT, EXCEPT AS SHOWN IN 2 M019
4. USE LONGITUDINAL AND TRANSVERSE BRACES FOR PIPES 4" AND LARGER.

PIPE HANGER (1 –)

N.T.S.

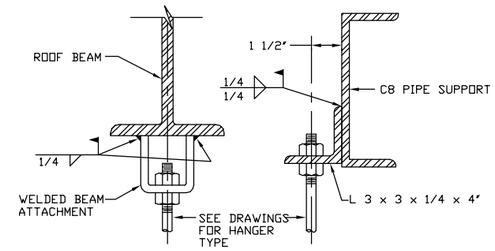

A – SECTION

B – SECTION

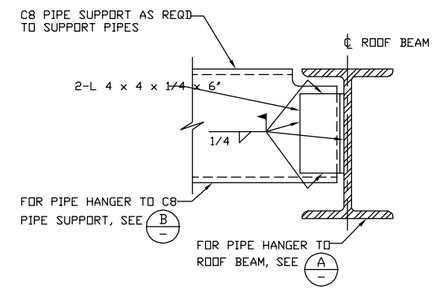

C – SECTION

PIPE SUPPORT (2 –)

N.T.S.

NOT USED (3 –)

N.T.S.

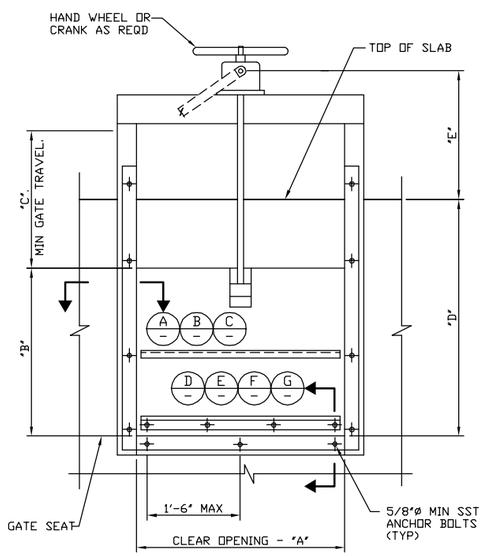

ELEVATION

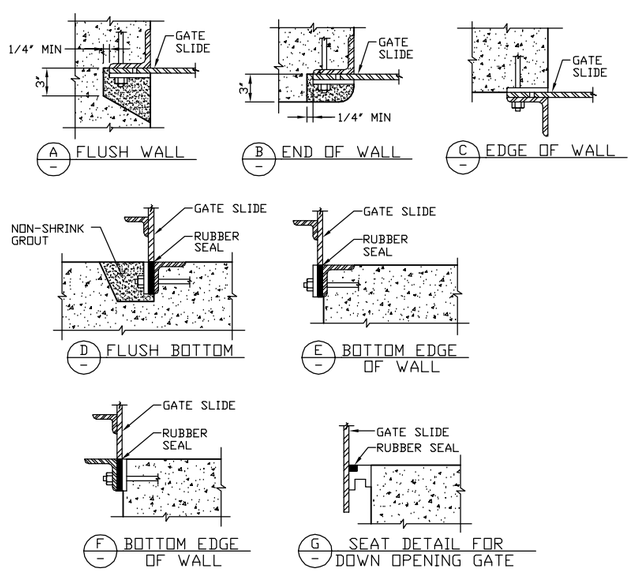

SST LOW-HEAD FABRICATED SLIDE GATE (4 –)

N.T.S.

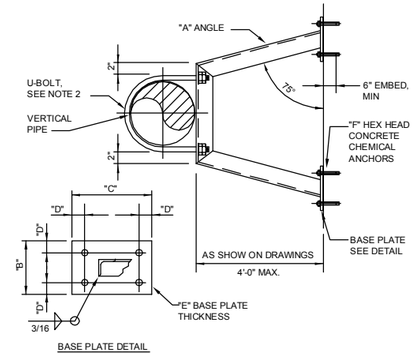

BASE PLATE DETAIL

DIMENSIONS IN INCHES (mm)						
PIPE	A	B	C	D	E	F
4 TO 12	3 X 3 X 3/8	4	8	1 1/4	1/2	(8) 1/2
14 TO 20	4 X 4 X 3/8	6	10	1 1/2	5/8	(8) 5/8
22 TO 34	6 X 6 X 3/8	8	12	1 3/4	5/8	(8) 5/8
36 TO 48	8 X 8 X 3/8	10	14	2	3/4	(8) 3/4

NOTES:

1. WHEN SUBMERGED USE TYPE 316 STAINLESS STEEL MATERIALS FOR ANGLE, U-BOLT, BOLTS, NUTS AND WASHERS.
2. SIZE U-BOLT ACCORDING TO PIPE SUPPORT MFR RECOMMENDATIONS.

FABRICATED PIPE BRACE (5 –)

N.T.S.

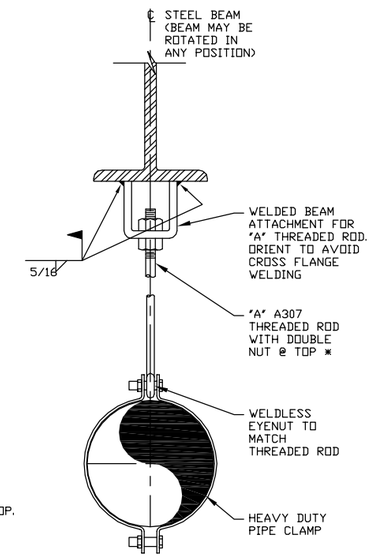

PIPE SIZE	"A"
3 TO 5	7/8"
6 TO 10	1"
12 TO 16	1 1/4"
16 TO 20	1 3/4"
24 TO 30	2"
32 TO 36	2 1/2"

* - FOR RODS LARGER THAN 1 1/4" PROVIDE WELDED EYE ROD AT TOP.

PIPE HANGER (6 –)

N.T.S.

FILENAME: 6232-M019.dwg

LAST UPDATED: 01/27/2012 09:46 AM

LAST SAVED BY: chess

No.	DATE	REVISIONS	APPROVED

DESIGNED: DAH

DRAWN: TLR

CHECKED: TSD

RBF CONSULTING

carollo

IRVINE RANCH WATER DISTRICT

CINDY MILLER RCE NO. 58116 PROJECT MANAGER DATE

PATRICIA UEMATSU RCE NO. 36762 PRINCIPAL ENGINEER DATE

IRVINE RANCH WATER DISTRICT
BAKER WATER TREATMENT PLANT
PROJECT NO. 11218

MECHANICAL TYPICAL DETAILS - XIII

DRAWING M019

SHEET 301 OF 632

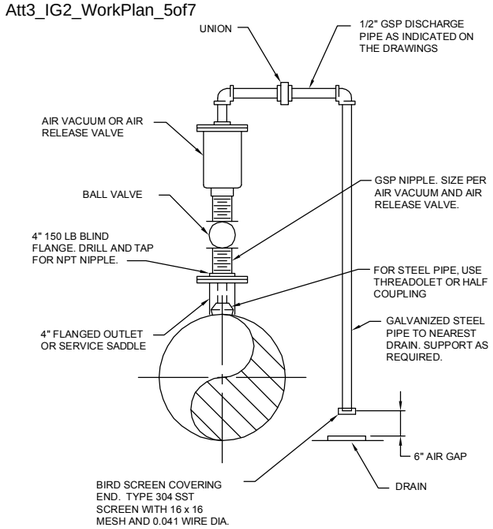

NOTES:

1. VALVE SIZE SHALL BE AS INDICATED ON THE DRAWINGS.
2. SERVICE TAP AND PLUG VALVE SHALL MATCH VALVE INLET SIZE.

AIR VACUUM AND AIR RELEASE FOR 4" AND SMALLER (1 / -)

N.T.S.

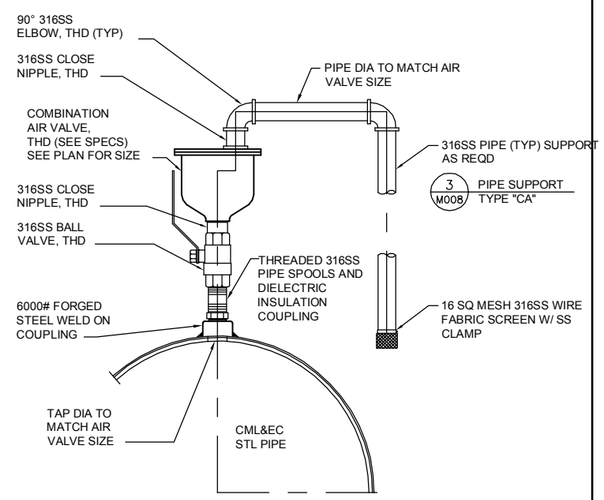

COMBINATION AIR VALVE ASSEMBLY (2 / -)

N.T.S.

NOT USED (3 / -)

N.T.S.

NOT USED (4 / -)

N.T.S.

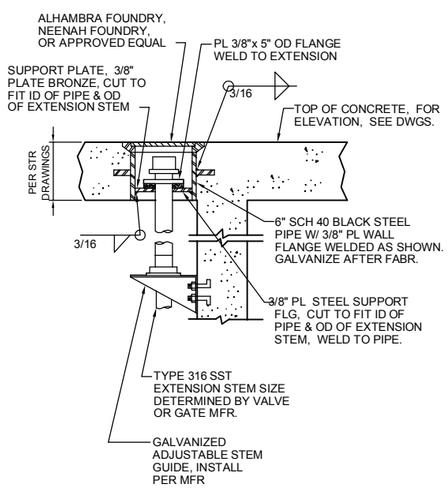

FLOOR BOX OPERATOR (5 / -)

N.T.S.

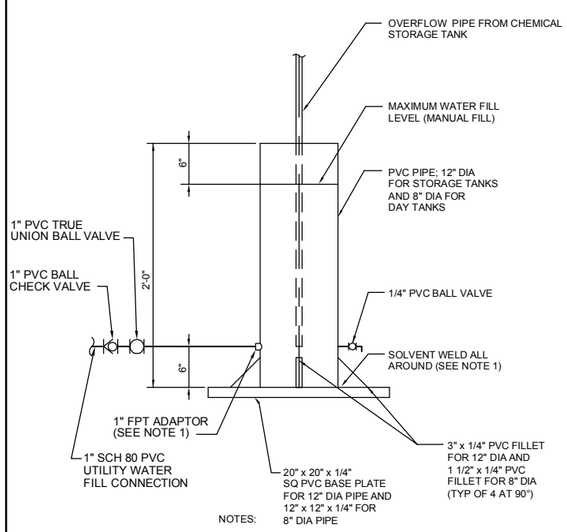

NOTES:

1. SOLVENT WELD OR EPOXY GLUE PIPE AND FITTING FOR WATERTIGHT SEAL
2. ALL PVC MATERIALS SHALL BE SCH 80 PVC

VAPOR SEAL (6 / -)

N.T.S.

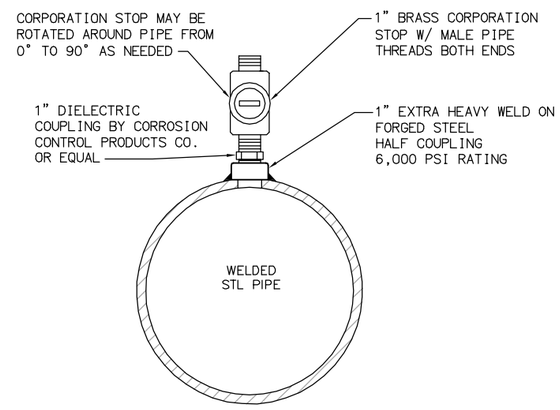

CORPORATION STOP INSTALLATION FOR SCE EFFICIENCY TESTING (7 / -)

N.T.S.

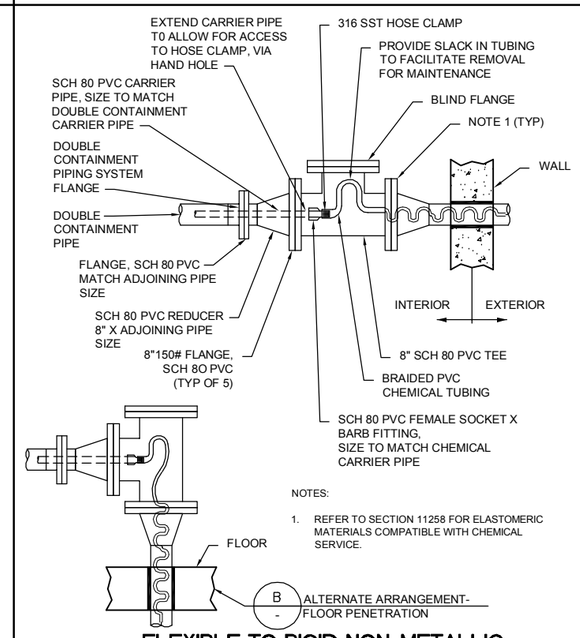

NOTES:

1. REFER TO SECTION 11258 FOR ELASTOMERIC MATERIALS COMPATIBLE WITH CHEMICAL SERVICE.

FLEXIBLE TO RIGID NON-METALLIC DOUBLE CONTAINMENT PIPING TRANSITION (8 / -)

N.T.S.

FILENAME: 6232-M020.dwg
LAST UPDATED: 01/27/2012 09:37 AM
LAST SAVED BY: trea

No.	DATE	REVISIONS	APPROVED

DESIGNED: DAH
DRAWN: TLR
CHECKED: TSD

RBF CONSULTING
carollo
IRVINE RANCH WATER DISTRICT

JIM MEYERHOFER	RCE NO. 48451	PROJECT MANAGER	DATE
CINDY MILLER	RCE NO. 58116	PROJECT MANAGER	DATE
PATRICIA UEMATSU	RCE NO. 36762	PRINCIPAL ENGINEER	DATE

IRVINE RANCH WATER DISTRICT
BAKER WATER TREATMENT PLANT
PROJECT NO. 11218

MECHANICAL
TYPICAL DETAILS - XIV

DRAWING M020

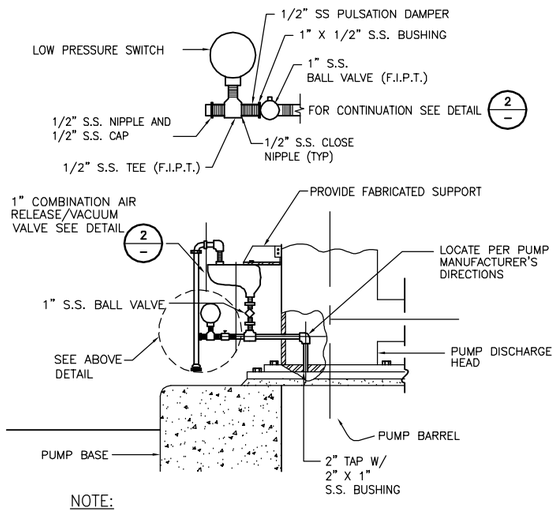

NOTE:

PROVIDE S.S. SUPPORT BRACKET FOR AIR RELEASE VALVE FASTEN BRACKET TO DISCHARGE HEAD OR BASE PLATE FLANGE AND TO AIR RELEASE VALVE BODY OR COVER PLATE

PUMP BARREL AIR VENT WITH LOW PRESSURE SWITCH

N.T.S. — 1/–

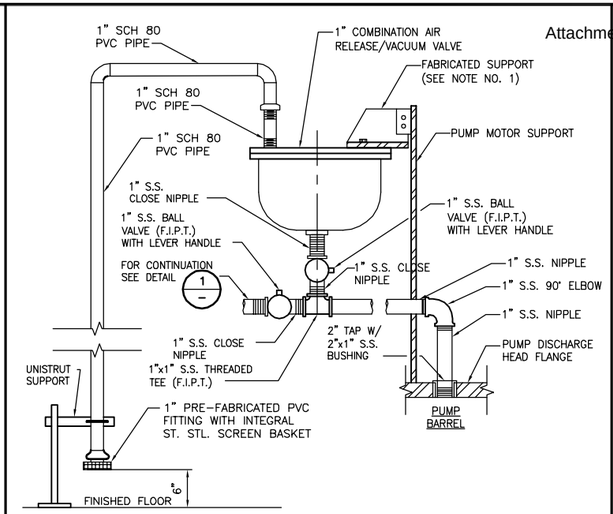

NOTES:

1. SEISMIC FABRICATED BRACKET SHALL BE 1/8" THICK STEEL PLATE WITH ONE GUSSET. WELD ALL SEGMENTS ALL AROUND. ATTACH FABRICATED BRACKET TO AIR VALVE BY REMOVING AND REPLACING 2 BOLTS WITH LONGER BOLTS AS REQUIRED. ATTACH FABRICATED BRACKET TO PUMP MOTOR SUPPORT WITH 1/4" STEEL PLATE ON PUMP MOTOR SUPPORT AND 2-3/8"ø BOLTS WITH SLOTTED HOLES FOR ADJUSTMENT. DO NOT WELD TO PUMP DISCHARGE HEAD. WELD TO PUMP MOTOR SUPPORT AND DO NOT FIELD WELD.
2. COMBINATION AIR VALVE SHALL HAVE SOFT SEATING MATERIAL

PUMP BARREL AIR VENT

N.T.S. — 2/–

NOT USED

N.T.S. — 3/–

NOT USED

N.T.S. — 4/–

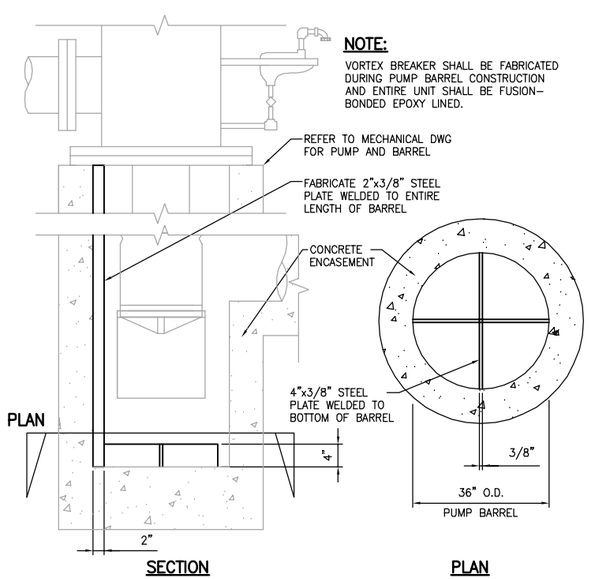

VORTEX BREAKER

N.T.S. — 5/–

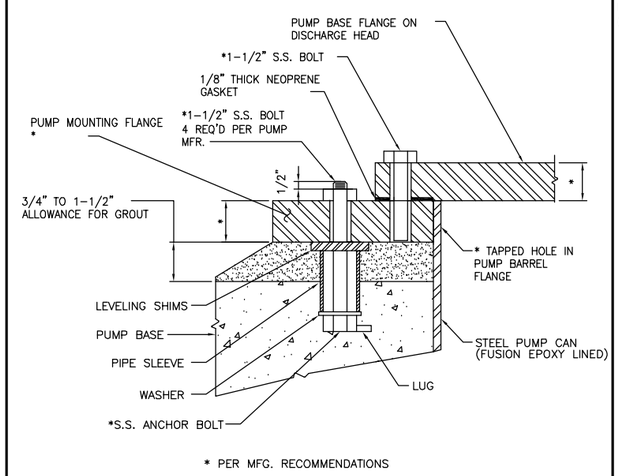

* PER MFG. RECOMMENDATIONS

PUMP BASE PLATE

N.T.S. — 6/–

NOTE:

1. DETAILS APPLIES TO CA, AA, CS, AND SB CHEMICAL PIPING.
2. REFER TO SECTION 11258 FOR ELASTOMERIC MATERIALS COMPATIBLE WITH CHEMICAL SERVICE

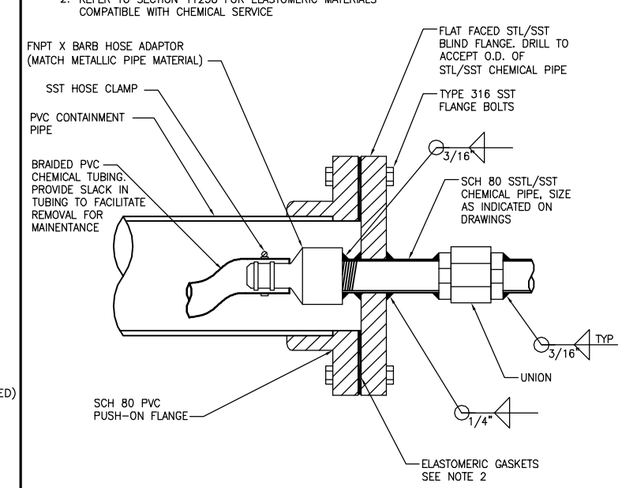

METALLIC CONTAINMENT PIPE TRANSITION

N.T.S. — 7/–

NOTE:

1. DETAILS APPLIES TO CDO, HCI, PC, SC, AND SH CHEMICAL PIPING.
2. REFER TO SECTION 11258 FOR ELASTOMERIC MATERIALS COMPATIBLE WITH CHEMICAL SERVICE

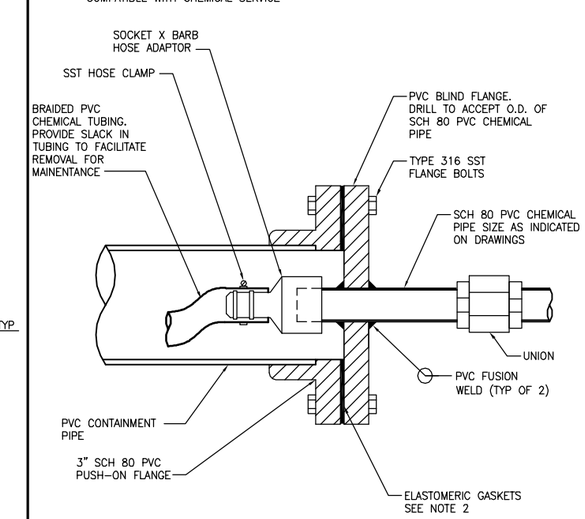

NON-METALLIC CONTAINMENT PIPE TRANSITION

N.T.S. — 8/–

FILENAME: 6232-M021.dwg
LAST UPDATED: 01/27/2012 09:50 AM
LAST SAVED BY: chess

No.	DATE	REVISIONS	APPROVED

DESIGNED: DAH
DRAWN: TLR
CHECKED: TSD

RBF CONSULTING — carollo — IRVINE RANCH WATER DISTRICT

JIM MEYERHOFER	RCE NO. 48451	PROJECT MANAGER	DATE
CINDY MILLER	RCE NO. 58116	PROJECT MANAGER	DATE
PATRICIA UEMATSU	RCE NO. 36762	PRINCIPAL ENGINEER	DATE

IRVINE RANCH WATER DISTRICT
BAKER WATER TREATMENT PLANT
PROJECT NO. 11218

MECHANICAL TYPICAL DETAILS - XV

DRAWING M021

LOCATION	CHEMICAL	GPM	DIMENSIONS IN INCHES			
			'A'	'D'	'E'	'F'
CT BASIN	CS	50	2"	11'-6"	5'-9"	1/4"
CT BASIN	SH	50	2"	11'-6"	5'-9"	1/4"
CT BASIN	AA	50	2"	11'-6"	5'-9"	1/4"

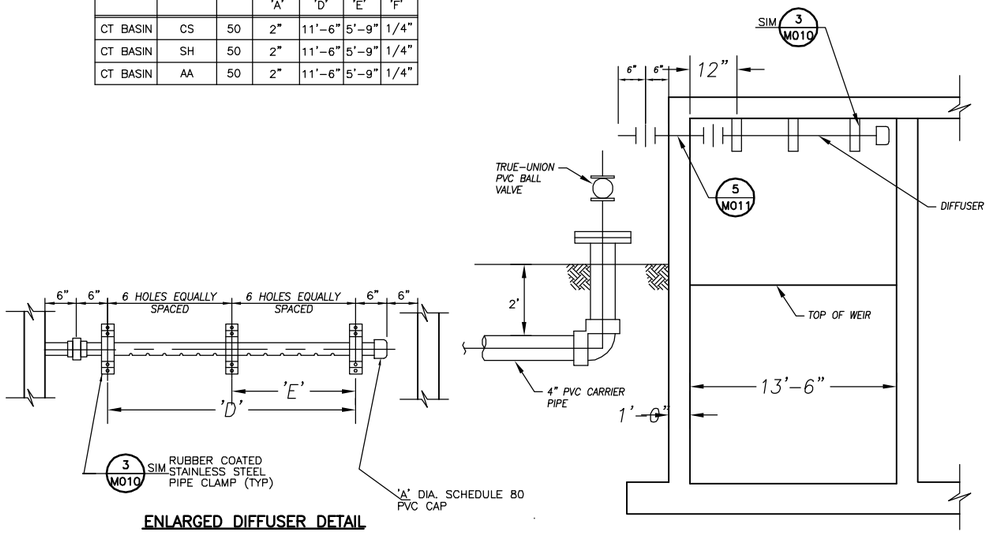

CHEMICAL DIFFUSER OVER WEIR - DILUTE CHEMICAL SOLUTIONS

N.T.S.

1 / –

LOCATION	CHEMICAL	DIMENSIONS IN INCHES				
		'A'	'D'	'E'	'F'	'G'
CT BASIN	CS	2"	12'-6"	4'-2"	2'-1"	3/8"
CT BASIN	SH	2"	12'-6"	4'-2"	2'-1"	3/8"
CT BASIN	AA	2"	12'-6"	4'-2"	6'-3"	3/8"
FOREBAY 1	SH	2"	14'-6"	4'-10"	2'-5"	3/8"
FOREBAY 2	SH	2"	14'-6"	4'-10"	2'-5"	3/8"

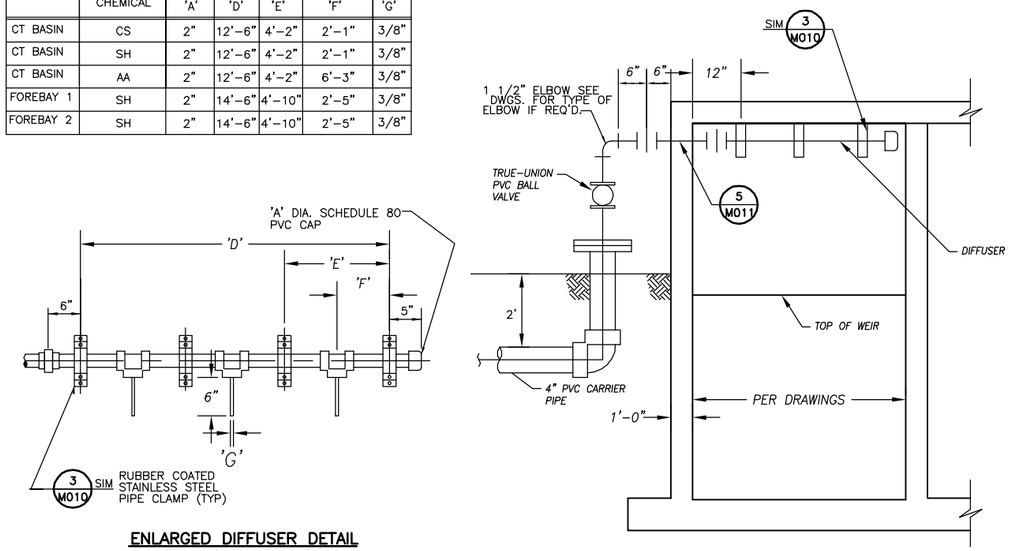

CHEMICAL DIFFUSER OVER WEIR - NEAT CHEMICAL SOLUTIONS

N.T.S.

2 / –

NOT USED

N.T.S.

3 / –

LOCATION	CHEMICAL	GPM	DIMENSIONS IN INCHES							
			'A'	'B'	'C'	'D'	'E'	'F'	'G'	'H'
DIF-2	PC DIFFUSER	200	3"	4	6	42	3/8"	2"	6"	8"
DIF-3	PC (MFWW) DIFFUSER	100	2"	4	6	10	1/4"	3/4"	1 1/2"	2"

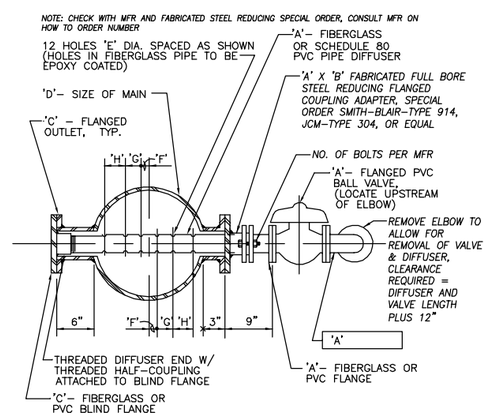

EXPOSED IN-LINE DIFFUSER FRONT ACCESS

N.T.S.

4 / –

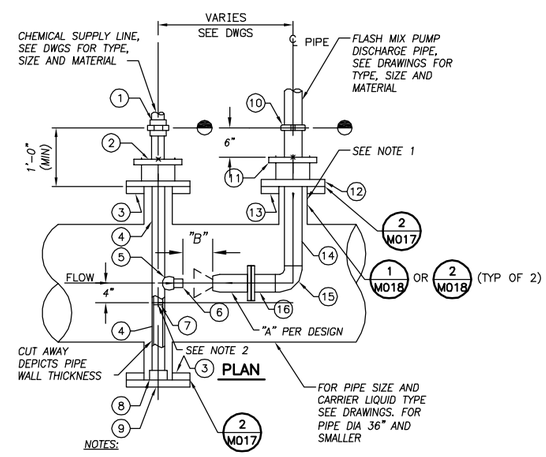

NOTES:

1. SIZE OF OUTLET TO BE DETERMINED BY PUMP DISCHARGE PIPE SIZE AND LARGE ENOUGH TO ALLOW REMOVAL OF PIPE AND NOZZLE.
2. WELDED PIPE CONNECTION AFTER INSTALLATION OF SST PLUG.
3. "A" AND "B" ARE PER DESIGN FLOW REQUIREMENTS "B" SHALL BE 6" MINIMUM.

PUMP TAG	CONNECTION SIZE INCH	NOZZLE FLOW GPM	PRESSURE DROP PSI	ORFICE SIZE INCH	CAT. NO
02-MFW-P-0460	8	1060	10	4.875	8-HF-900
06-MFWW-P-0860	4	160	7	1.688	4-HF-160

PIPE MATERIAL LIST

1. 2" UNION, THREADED, SEE DWGS FOR MATERIAL.
2. 6" X 2" REDUCING FLANGED ADAPTER, FABRICATED.
3. 6" STEEL FLANGE, 150 LB, FLAT FACE, AWWA.
4. 2" X LENGTH AS REQD, TITANIUM PIPE.
5. 1/2" TITANIUM WELDED OUTLET BRANCH CONNECTION, THREADED.
6. 1/2" X VARIES TITANIUM NIPPLE, THREAD X BUTT, SEE NOTE 2.
7. 1/4" THICK X ID TITANIUM PLUG, FABRICATED AND WELD TO INSIDE WALL OF PIPE.
8. 2" TITANIUM ALIGNING CONNECTOR, WELD TO BLIND FLANGE.
9. 6" TITANIUM BLIND FLANGE. 150 LB, AWWA.
10. RIGID TYPE GROOVED TRANSITION COUPLING.
11. "X" X "Y" REDUCING FLANGE ADAPTER, FABRICATED SPECIAL WITH FULL BORE FLANGE.
12. SST, 150 LB FLANGE, FLAT FACE, AWWA.
13. STL, 150 LB FLANGE, FLAT FACE, AWWA.
14. "X" X LENGTH AS REQUIRED, SST PIPE, GROOVE X BUTT.
15. SST, SHORT RADIUS ELBOW, BUTT X BUTT.
16. "X" X 6" LONG, SST PIPE, BUTT X FLANGE, SEE NOTE 4.

PIPE MATERIAL LIST NOTES:
THE PIPE MATERIAL LIST FOR THIS DETAIL IS NOT COMPLETE, MANY REQUIRED FITTINGS SUCH AS UNIONS, GASKETS, BOLTS, ELBOWS, REDUCERS, BUSHINGS AND PIPE SUPPORTS OR HANGERS ARE NOT LISTED OR SHOWN. CONTRACTOR SHALL FURNISH AND INSTALL ALL MATERIAL NECESSARY TO COMPLETE THE INSTALLATION OF ALL PIPING AND EQUIPMENT.

NOTES:
1. SIZE NOZZLE CONNECTION OUTLET LARGE ENOUGH TO ALLOW PIPE AND NOZZLE TO BE REMOVED.
2. INSTALL NIPPLE LENGTH TO ALLOW 6" BETWEEN END OF NIPPLE AND NOZZLE.
3. "X" AND "Y" DIMENSIONS TO BE DETERMINED BY PUMP DISCHARGE PIPE SIZE.
4. INSTALL REDUCING OR INCREASING CONCENTRIC REDUCER TO MATCH NOZZLE SIZE, WHEN REQUIRED.

TITANIUM FLASH MIX ASSEMBLY

N.T.S.

5 / –

LAST SAVED BY: treo LAST UPDATED: 01/27/2012 09:25 AM FILENAME: 6232-M022.dwg

No.	DATE	REVISIONS	APPROVED

DESIGNED: DAH
DRAWN: TLR
CHECKED: TSD

RBF CONSULTING

carollo

IRVINE RANCH WATER DISTRICT

JIM MEYERHOFER	RCE NO. 48451	PROJECT MANAGER	DATE
CINDY MILLER	RCE NO. 58116	PROJECT MANAGER	DATE
PATRICIA UEMATSU	RCE NO. 36762	PRINCIPAL ENGINEER	DATE

IRVINE RANCH WATER DISTRICT
BAKER WATER TREATMENT PLANT
PROJECT NO. 11218

MECHANICAL
TYPICAL DETAILS - XVI

DRAWING M022

KEY NOTES

- 27 DEPEND-O-LOK FXF
- 37 WALL PENETRATION PER IRWD STD. DWG. G-8
- 38 WALL PENETRATION PER IRWD STD. DWG. G-9
- 110 INSTALL TWO WIRE TEST STATION PER IRWD STD. CP-1 AND IRWD STD G-2
- 111 INSTALL DISMANTLING JOINT WITH TIE RODS
- 116 DUPLEX SUBMERSIBLE SUMP PUMP AND PIPING ASSEMBLY PER DETAIL 5 ON DWG M014

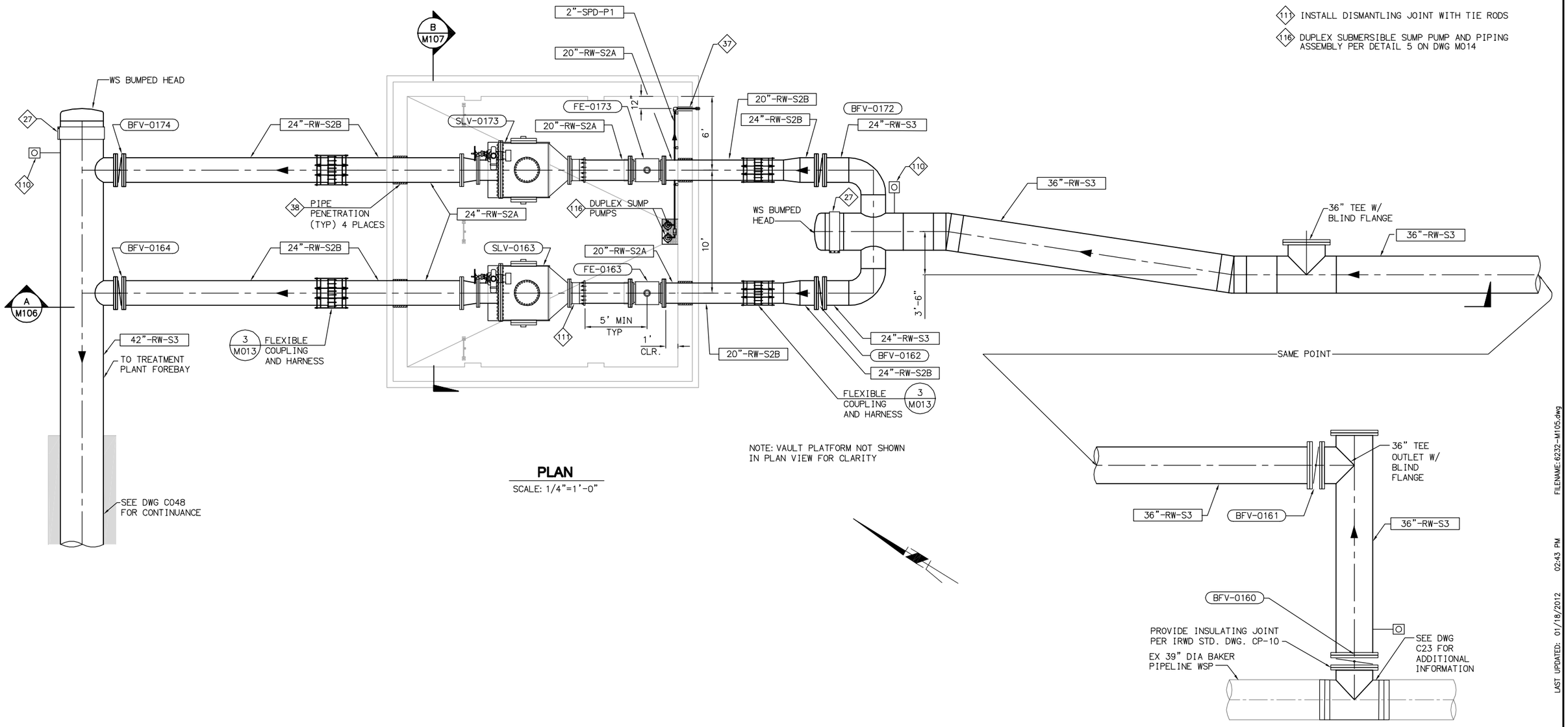

NOTE: VAULT PLATFORM NOT SHOWN IN PLAN VIEW FOR CLARITY

PLAN

SCALE: 1/4"=1'-0"

EQUIPMENT TAG NUMBERS ON THIS DRAWING ARE PRECEDED W/ **01-RW-** UNLESS OTHERWISE LABELED

No.	DATE	REVISIONS	APPROVED

DESIGNED: WFM
DRAWN: DDT
CHECKED: CLM

RBF CONSULTING

carollo

IRVINE RANCH WATER DISTRICT

WILLIAM F. McINERNEY RCE NO. 16084 PROJECT ENGINEER DATE
CINDY MILLER RCE NO. 58116 PROJECT MANAGER DATE
PATRICIA UEMATSU RCE NO. 36762 PRINCIPAL ENGINEER DATE

IRVINE RANCH WATER DISTRICT
BAKER WATER TREATMENT PLANT
PROJECT NO. 11218

FLOW CONTROL FACILITY MECHANICAL PLAN

DRAWING **M105**

SHEET **305** OF **632**

FILENAME: 6232-M105.dwg
LAST UPDATED: 01/18/2012 02:43 PM
LAST SAVED BY: dtrujillo

KEY NOTES

37 WALL PENETRATION PER IRWD STD. DWG. G-8

111 INSTALL DISMANTLING JOINT WITH TIE RODS

116 DUPLEX SUBMERSIBLE SUMP PUMP AND PIPING ASSEMBLY PER DETAIL 5 ON DWG M014

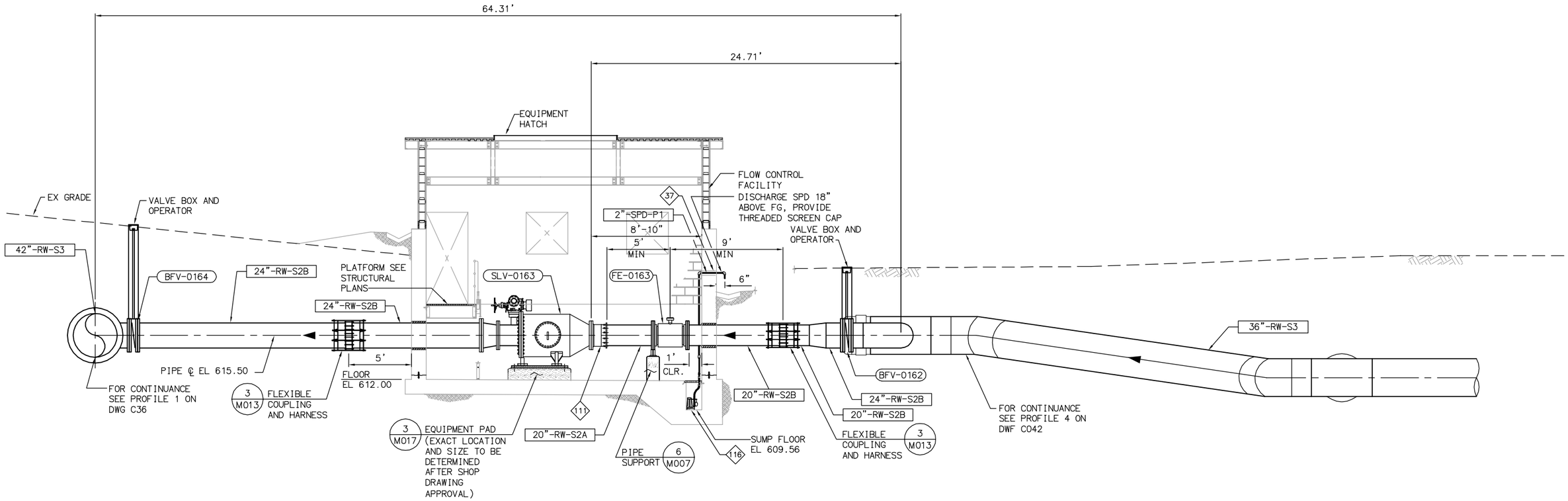

SECTION A M105
SCALE: 1/4"=1'-0"

EQUIPMENT TAG NUMBERS ON THIS DRAWING ARE PRECEDED W/ **01-RW-** UNLESS OTHERWISE LABELED

No.	DATE	REVISIONS	APPROVED

DESIGNED: WFM
DRAWN: DDT
CHECKED: CLM

RBF CONSULTING

carollo

IRVINE RANCH WATER DISTRICT

WILLIAM F. McINERNEY	RCE NO. 16084	PROJECT ENGINEER	DATE
CINDY MILLER	RCE NO. 58116	PROJECT MANAGER	DATE
PATRICIA UEMATSU	RCE NO. 36762	PRINCIPAL ENGINEER	DATE

IRVINE RANCH WATER DISTRICT
BAKER WATER TREATMENT PLANT
PROJECT NO. 11218

FLOW CONTROL FACILITY MECHANICAL SECTION

DRAWING **M106**
SHEET **306** OF **632**

LAST SAVED BY: drujillo LAST UPDATED: 01/24/2012 01:57 PM FILENAME: 6232-M106.dwg

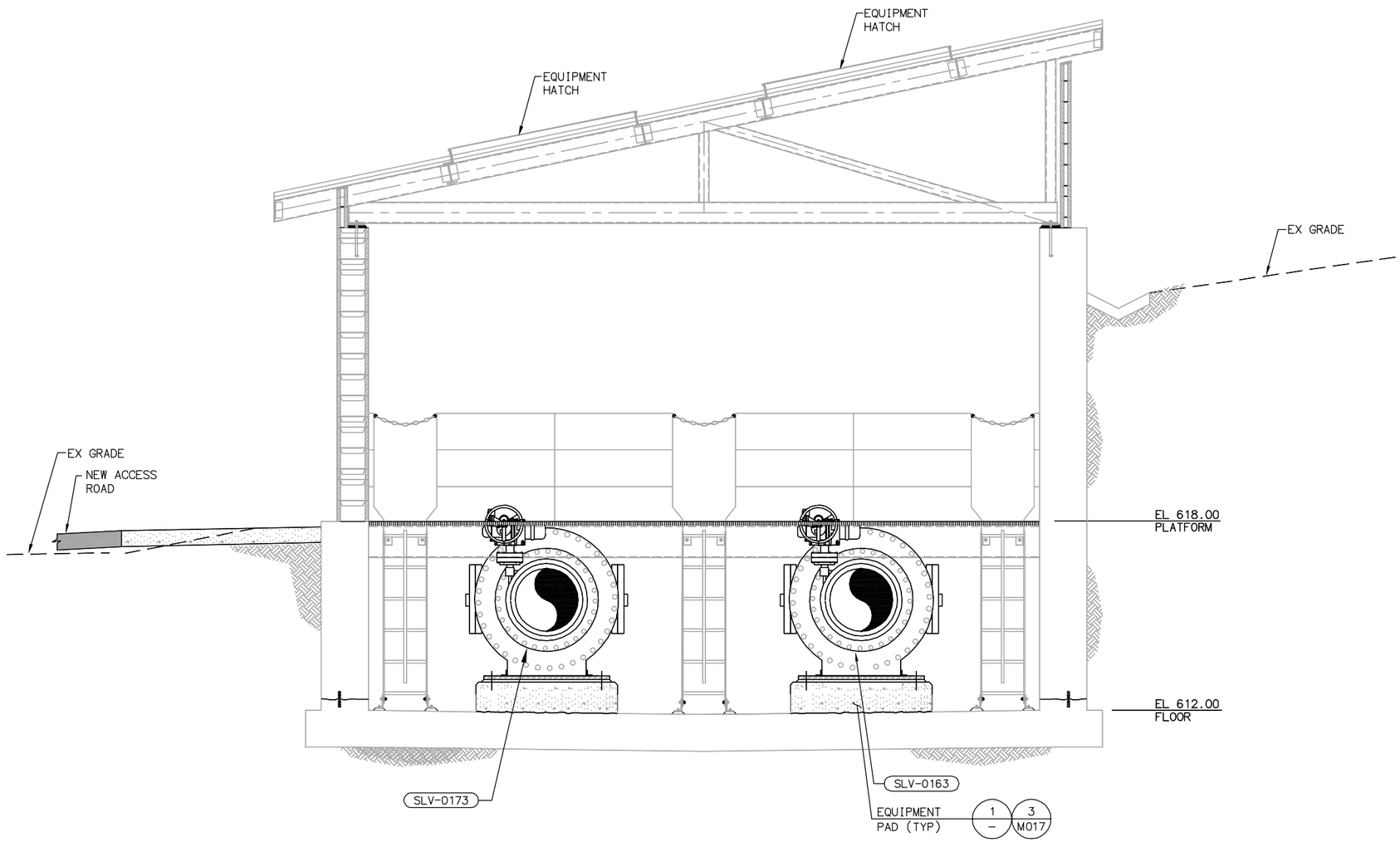

SECTION B M105
SCALE: 1/2"=1'-0"

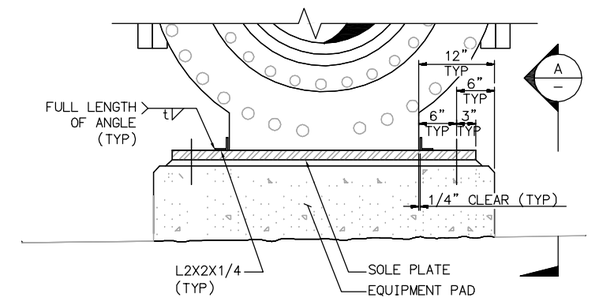

DETAIL 1 –
N.T.S

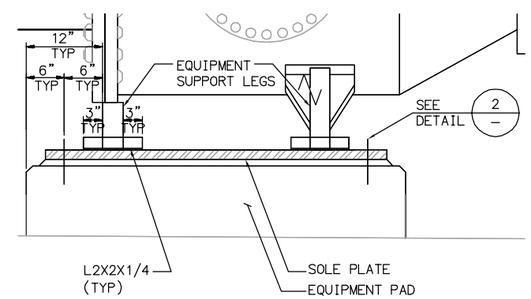

SECTION A –
N.T.S

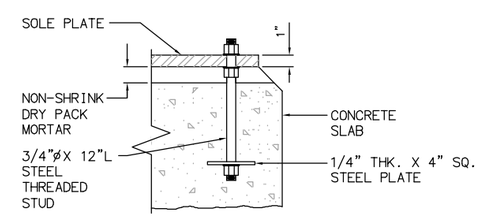

DETAIL 2 –
N.T.S

LAST SAVED BY: dmanaesse LAST UPDATED: 01/14/2012 05:34 PM FILENAME: 6232-M107.dwg

No.	DATE	REVISIONS	APPROVED

DESIGNED: WFM
DRAWN: DDT
CHECKED: CLM

RBF CONSULTING
carollo
IRVINE RANCH WATER DISTRICT

WILLIAM F. McINERNEY RCE NO. 16084 PROJECT ENGINEER DATE
CINDY MILLER RCE NO. 58116 PROJECT MANAGER DATE
PATRICIA UEMATSU RCE NO. 36762 PRINCIPAL ENGINEER DATE

IRVINE RANCH WATER DISTRICT
BAKER WATER TREATMENT PLANT
PROJECT NO. 11218

FLOW CONTROL FACILITY MECHANICAL SECTIONS

DRAWING M107
SHEET X OF 632

KEY NOTES

- 18 BACKFLOW PREVENTER ASSEMBLY PER DETAIL 1 ON DWG M015
- 27 DEPEND-O-LOK FXF
- 37 WALL PENETRATION PER IRWD STD. DWG. G-8
- 39 VAULT VENT PER DETAIL 4 ON DWG M017
- 55 PRESSURE SWITCH, SEE ELECTRICAL PLANS
- 56 SAMPLE CONNECTION PER DETAIL 4 ON DWG M016
- 116 DUPLEX SUBMERSIBLE SUMP PUMP AND PIPING ASSEMBLY PER DETAIL 5 ON DWG M014
- 118 INSTALL CORPORATION STOP AND TAP PER DETAIL 7 ON DWG M020
- 124 DISMANTLING JOINT WITH TIE RODS

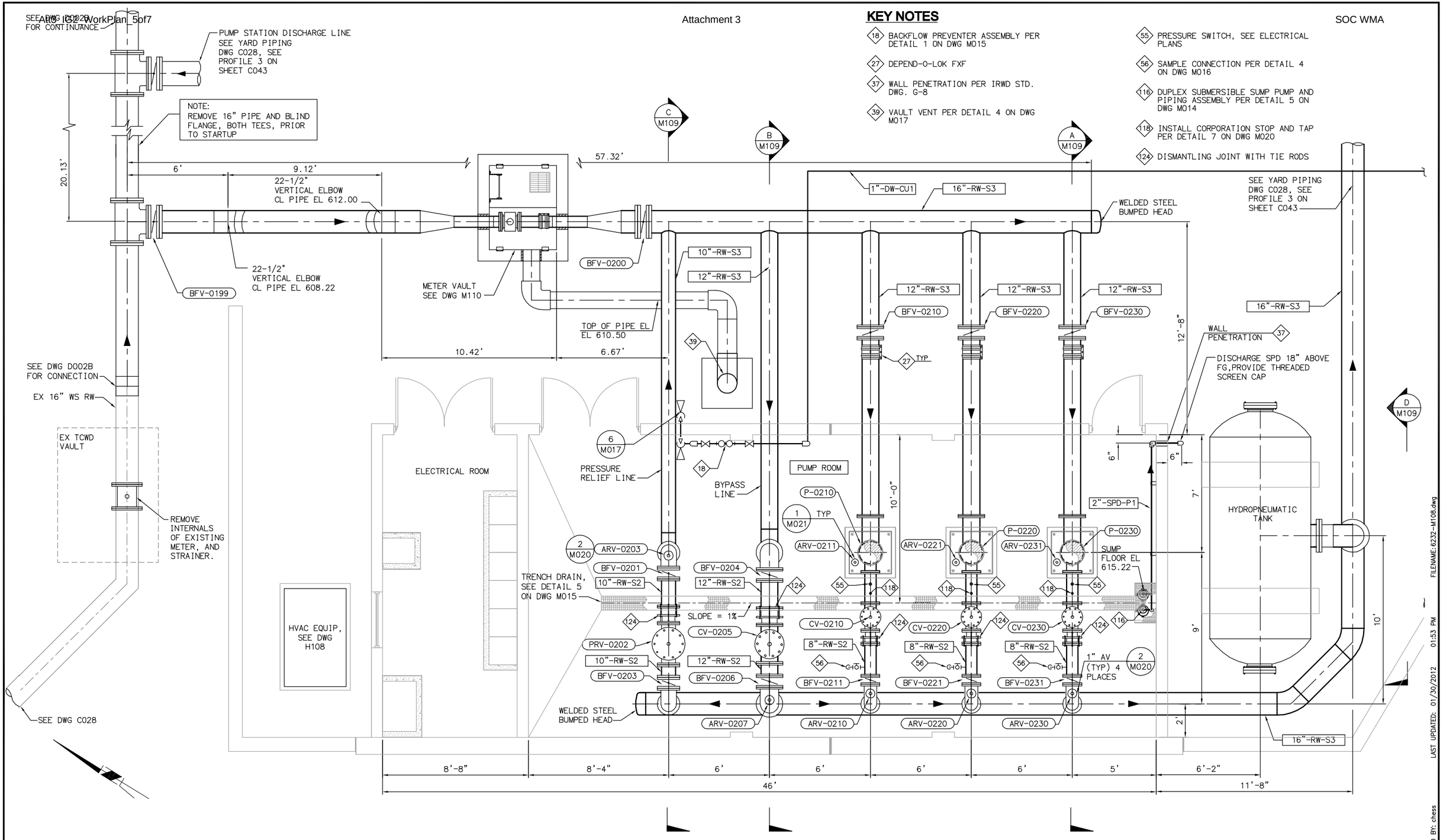

PLAN

SCALE: 3/8" = 1'-0"

EQUIPMENT TAG NUMBERS ON THIS DRAWING ARE PRECEDED W/ **01-RW-** UNLESS OTHERWISE LABELED

No.	DATE	REVISIONS	APPROVED

DESIGNED: WFM
DRAWN: DDT
CHECKED: CLM

RBF CONSULTING | carollo | IRVINE RANCH WATER DISTRICT

WILLIAM F. McINERNEY	RCE NO. 16084	PROJECT ENGINEER	DATE
CINDY MILLER	RCE NO. 58116	PROJECT MANAGER	DATE
PATRICIA UEMATSU	RCE NO. 36762	PRINCIPAL ENGINEER	DATE

IRVINE RANCH WATER DISTRICT
BAKER WATER TREATMENT PLANT
PROJECT NO. 11218

TRABUCO CANYON WATER DISTRICT PUMP STATION - MECHANICAL PLAN

DRAWING **M108**
SHEET **308** OF **632**

FILENAME: 6232-M108.dwg
LAST UPDATED: 01/30/2012 01:53 PM
LAST SAVED BY: chess

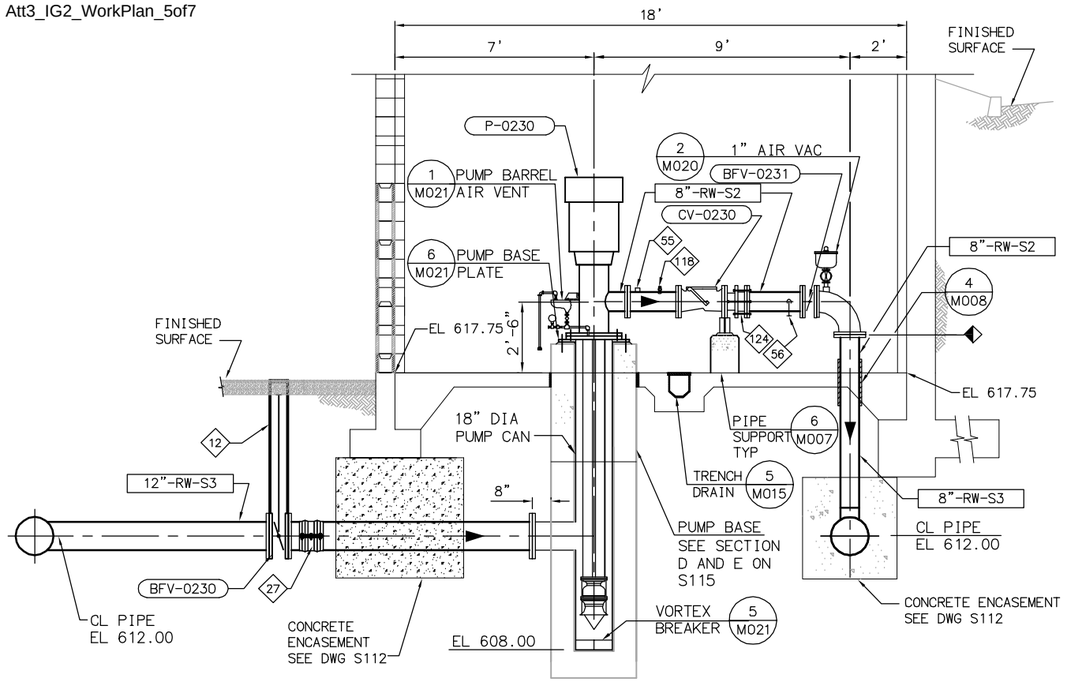

SECTION A / M108
SCALE: 3/8" = 1'-0"

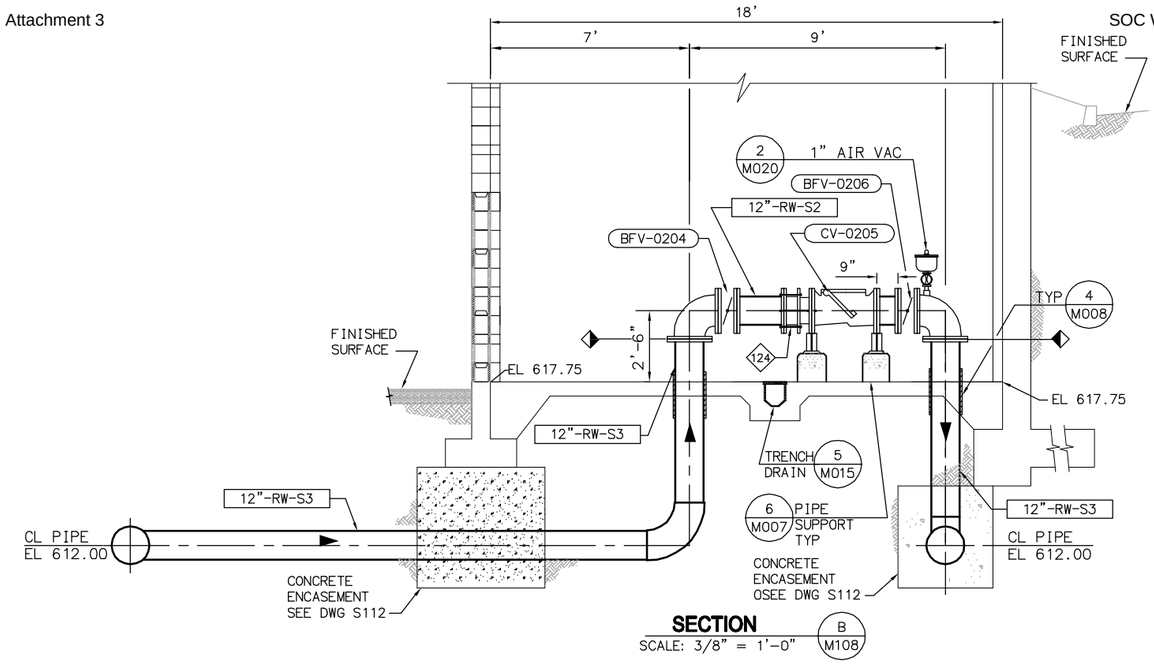

SECTION B / M108
SCALE: 3/8" = 1'-0"

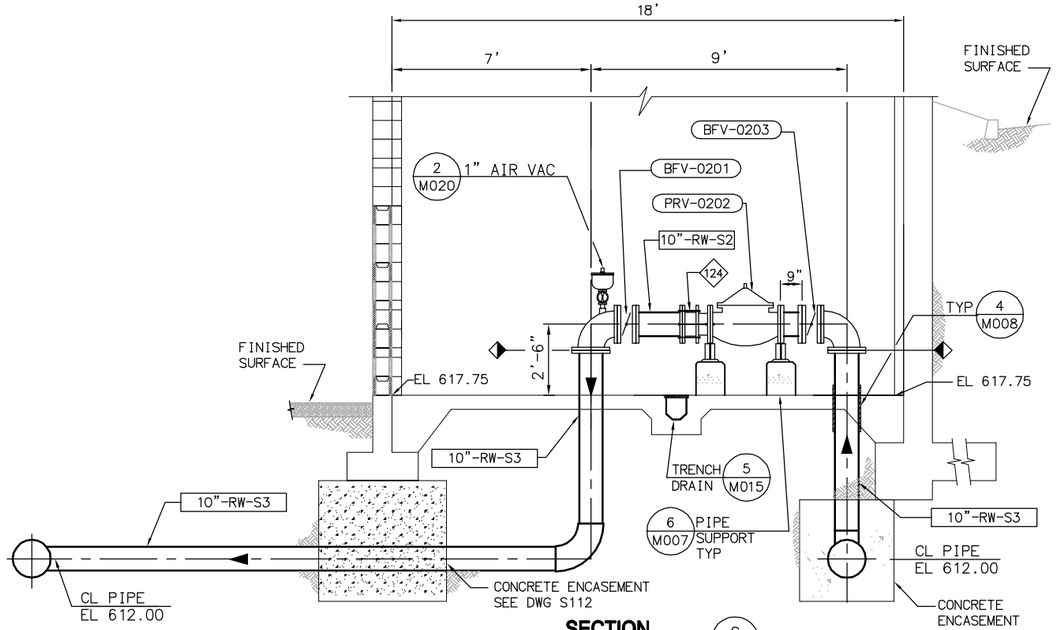

SECTION C / M108
SCALE: 3/8" = 1'-0"

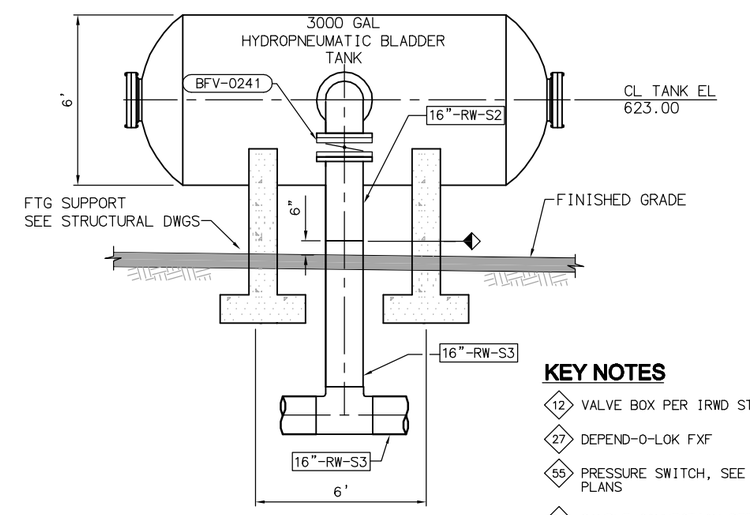

SECTION D / M108
SCALE: 3/8" = 1'-0"

KEY NOTES

- 12 VALVE BOX PER IRWD STD. DWG. W-22
- 27 DEPEND-O-LOK FXF
- 55 PRESSURE SWITCH, SEE ELECTRICAL PLANS
- 56 SAMPLE CONNECTION PER DETAIL 4 ON DWG M016
- 118 INSTALL CORPORATION STOP AND TAP PER DETAIL 7 ON DWG M020
- 124 DISMANTLING JOINT WITH TIE RODS

EQUIPMENT TAG NUMBERS ON THIS DRAWING ARE PRECEDED W/ **01-RW-** UNLESS OTHERWISE LABELED

No.	DATE	REVISIONS	APPROVED

DESIGNED: WFM
DRAWN: DDT
CHECKED: CLM

RBF CONSULTING

carollo

IRVINE RANCH WATER DISTRICT

WILLIAM F. McINERNEY	RCE NO. 16084	PROJECT ENGINEER	DATE
CINDY MILLER	RCE NO. 58116	PROJECT MANAGER	DATE
PATRICIA UEMATSU	RCE NO. 36762	PRINCIPAL ENGINEER	DATE

IRVINE RANCH WATER DISTRICT
BAKER WATER TREATMENT PLANT
PROJECT NO. 11218

TRABUCO CANYON WATER DISTRICT PUMP STATION - MECHANICAL SECTIONS

DRAWING **M109**

SHEET **309** OF **632**

FILENAME: 6232-M109.dwg
LAST UPDATED: 01/31/2012 05:31 PM
LAST SAVED BY: chess

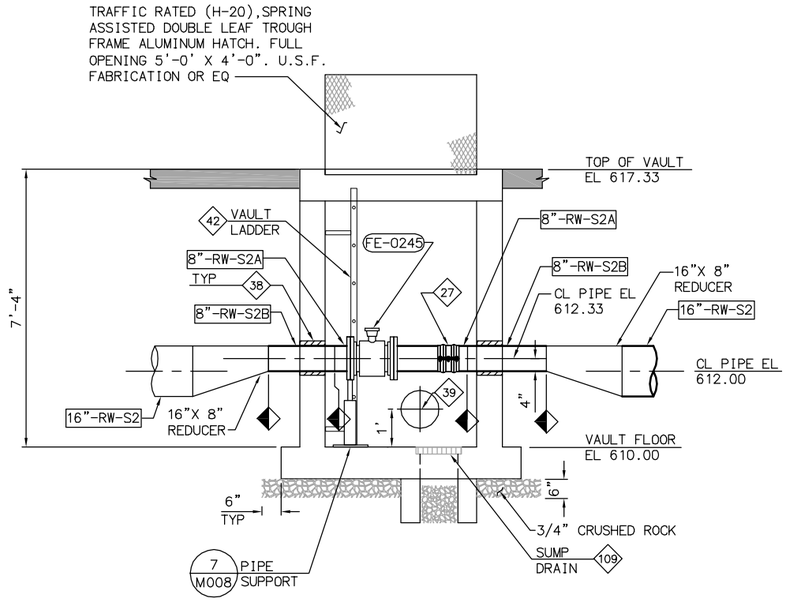

SECTION A / –
SCALE: 1/2" = 1'-0"

KEY NOTES

- 27 DEPEND-O-LOK FXF
- 38 WALL PENETRATION PER IRWD STD. DWG. G-9
- 39 VAULT VENT PER DETAIL 4 ON DWG M017
- 42 VAULT LADDER PER IRWD STD DWG G-5
- 109 VAULT FLOOR SUMP DRAIN TYPE 3 PER IRWD STD. DWG. G-6

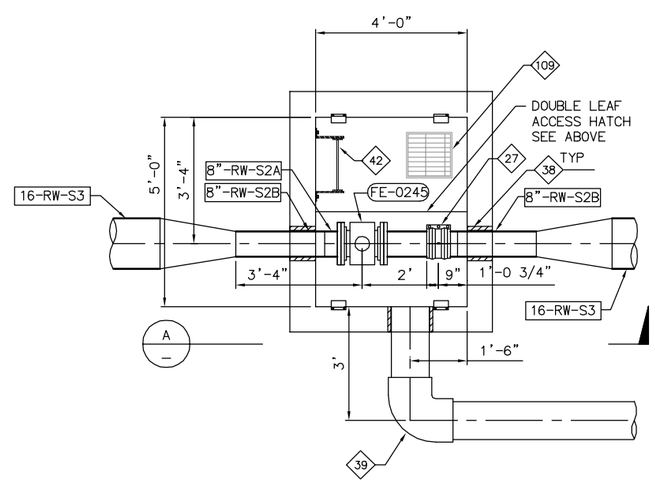

PLAN 1 / M108
SCALE: 1/2" = 1'-0"

EQUIPMENT TAG NUMBERS ON THIS DRAWING ARE PRECEDED W/ **01-RW-** UNLESS OTHERWISE LABELED

No.	DATE	REVISIONS	APPROVED

DESIGNED: WFM
DRAWN: DDT
CHECKED: CLM

RBF CONSULTING

carollo

IRVINE RANCH WATER DISTRICT

WILLIAM F. McINERNEY	RCE NO. 16084	PROJECT ENGINEER	DATE
CINDY MILLER	RCE NO. 58116	PROJECT MANAGER	DATE
PATRICIA UEMATSU	RCE NO. 36762	PRINCIPAL ENGINEER	DATE

IRVINE RANCH WATER DISTRICT
BAKER WATER TREATMENT PLANT
PROJECT NO. 11218

TRABUCO CANYON WATER DISTRICT PUMP STATION METER VAULT AND HYDRO TANK

DRAWING **M110**
SHEET **310** OF **632**

FILENAME: 6232-M110.dwg
LAST UPDATED: 01/24/2012 02:14 PM
LAST SAVED BY: dtrujillo

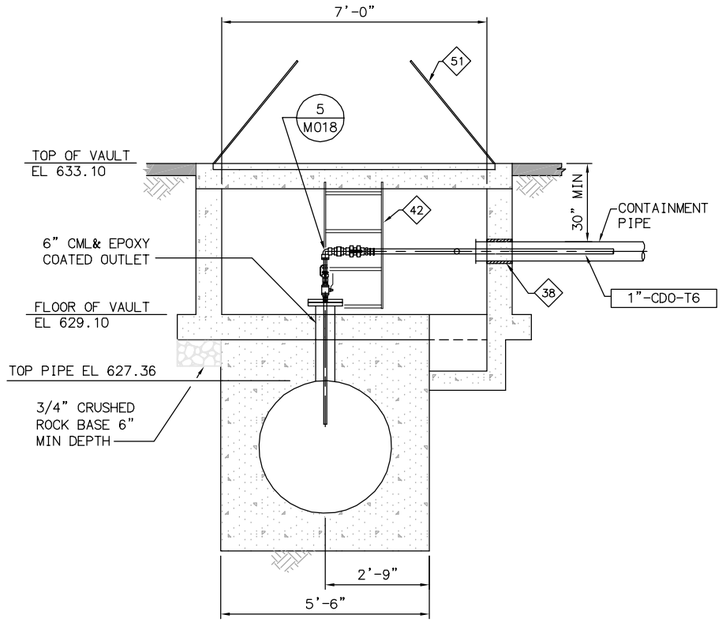

SECTION A —

SCALE: 1/2" = 1'-0"

KEY NOTES

38 WALL PENETRATION PER IRWD STD. DWG. G-9

42 VAULT LADDER PER IRWD STD DWG G-5

51 TRAFFIC RATED (H20) SPRING ASSISTED, DOUBLE LEAF, TROUGH FRAME ALUMINUM HATCH. CONCRETE OPENING 7'-0" X 4'-0". U.S.F. FABRICATION OR EQUAL.

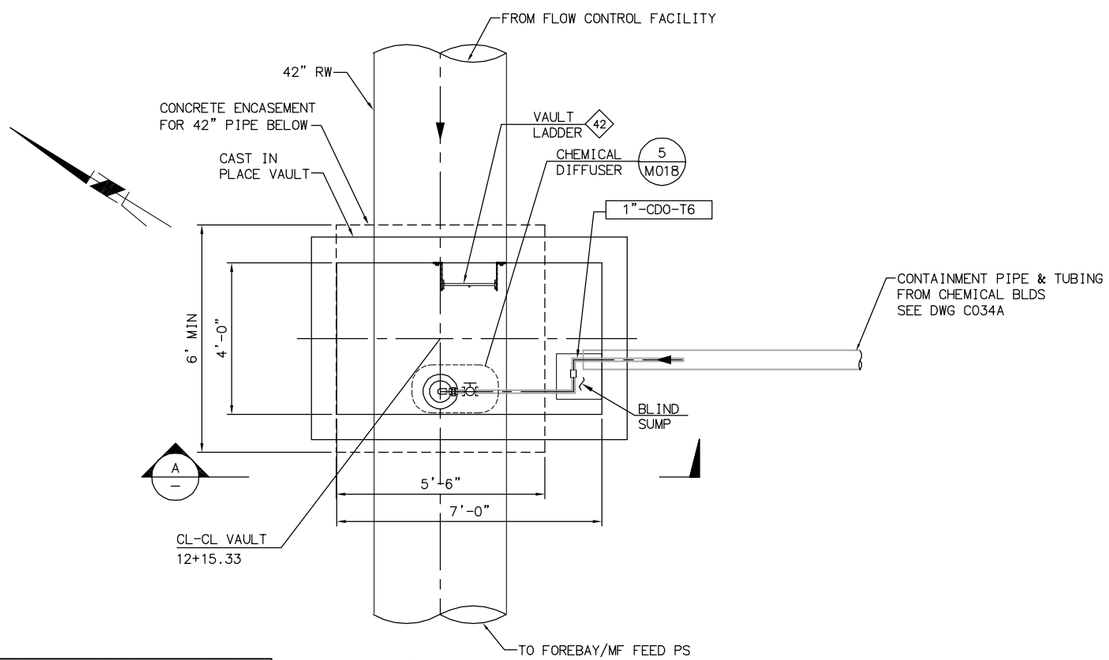

PLAN

SCALE: 1/2" = 1'-0"

EQUIPMENT TAG NUMBERS ON THIS DRAWING ARE PRECEDED W/ **01-RW-** UNLESS OTHERWISE LABELED

No.	DATE	REVISIONS	APPROVED

DESIGNED: CBH
DRAWN: DDT
CHECKED: CLM

RBF CONSULTING

carollo

IRVINE RANCH WATER DISTRICT

COREY HESS	RCE NO. 68499	PROJECT ENGINEER	DATE
CINDY MILLER	RCE NO. 58116	PROJECT MANAGER	DATE
PATRICIA UEMATSU	RCE NO. 36762	PRINCIPAL ENGINEER	DATE

IRVINE RANCH WATER DISTRICT
BAKER WATER TREATMENT PLANT
PROJECT NO. 11218

CHLORINE DIOXIDE VAULT PLAN AND SECTION

DRAWING **M111**

SHEET 311 OF 632

LAST SAVED BY: chess LAST UPDATED: 01/31/2012 06:27 PM FILENAME: 6232-M111.dwg

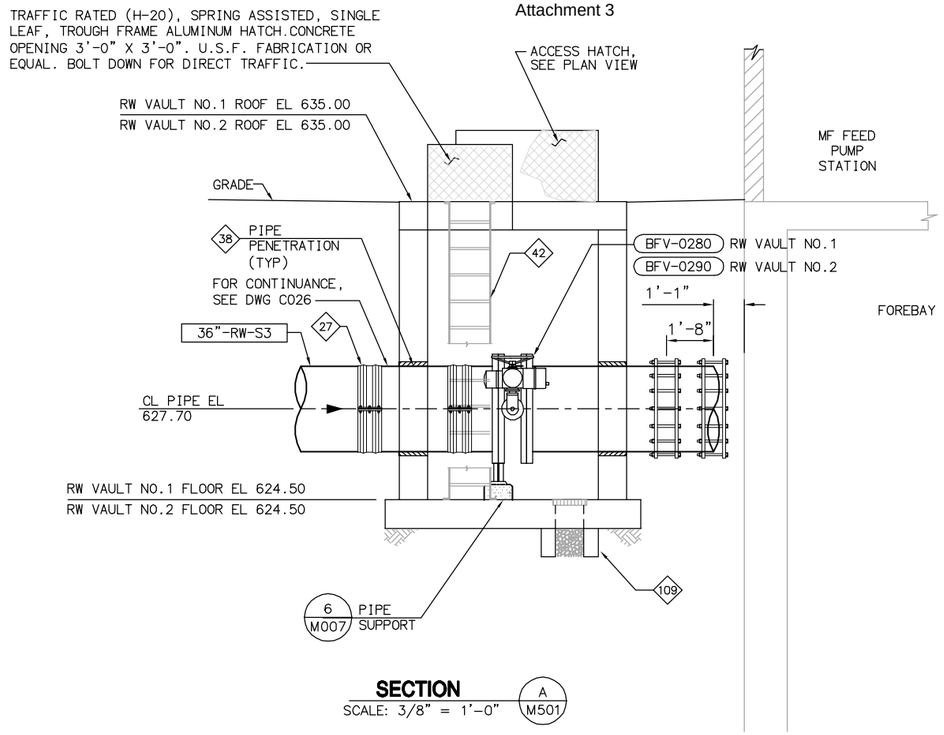

SECTION A M501

SCALE: 3/8" = 1'-0"

KEY NOTES

- 27 DEPEND-O-LOK FXF
- 38 WALL PENETRATION PER IRWD STD. DWG. G-9
- 39 VAULT VENT PER DETAIL 4 ON DWG M017
- 42 VAULT LADDER PER IRWD STD DWG G-5
- 109 VAULT FLOOR SUMP DRAIN TYPE 3 PER IRWD STD. DWG. G-6

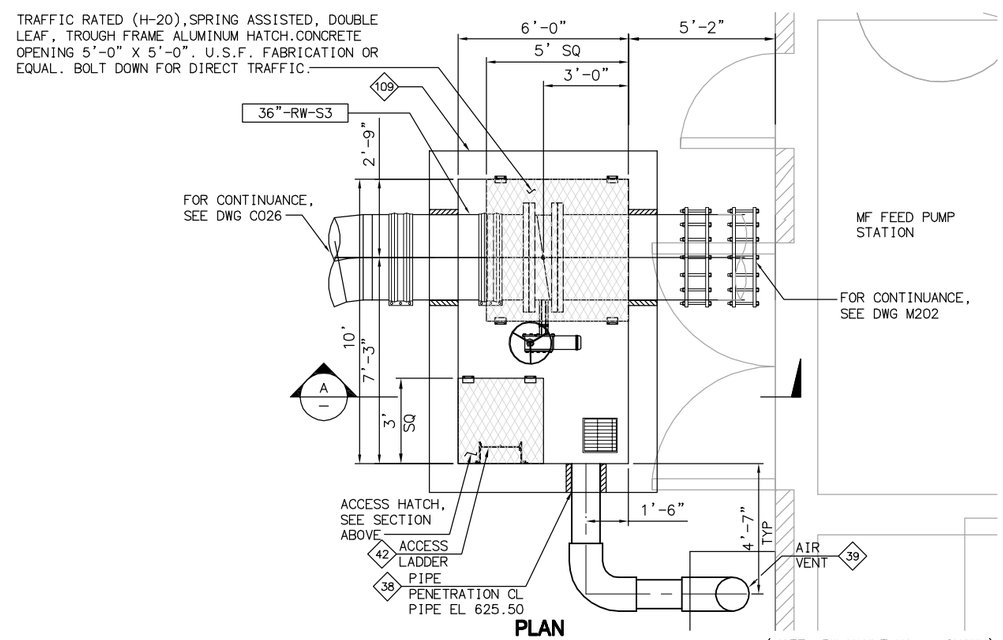

PLAN

RW VAULT NO.1 & NO.2

SCALE: 3/8" = 1'-0"

(NOTE: RW VAULT NO. 1 SHOWN)

EQUIPMENT TAG NUMBERS ON THIS DRAWING ARE PRECEDED W/ UNLESS OTHERWISE LABELED **01-RW-**

No.	DATE	REVISIONS	APPROVED

DESIGNED: WFM
DRAWN: DDT
CHECKED: CLM

RBF CONSULTING

carollo

IRVINE RANCH WATER DISTRICT

WILLIAM F. McINERNEY	RCE NO. 16084	PROJECT ENGINEER	DATE
CINDY MILLER	RCE NO. 58116	PROJECT MANAGER	DATE
PATRICIA UEMATSU	RCE NO. 36762	PRINCIPAL ENGINEER	DATE

IRVINE RANCH WATER DISTRICT
BAKER WATER TREATMENT PLANT
PROJECT NO. 11218

RW VALVE VAULTS NO.1 & NO.2 FOREBAY INLETS PLAN AND SECTION

DRAWING **M200**

SHEET **312** OF **632**

FILENAME: 6232-M200.dwg
LAST UPDATED: 01/20/2012 03:59 PM
LAST SAVED BY: chess

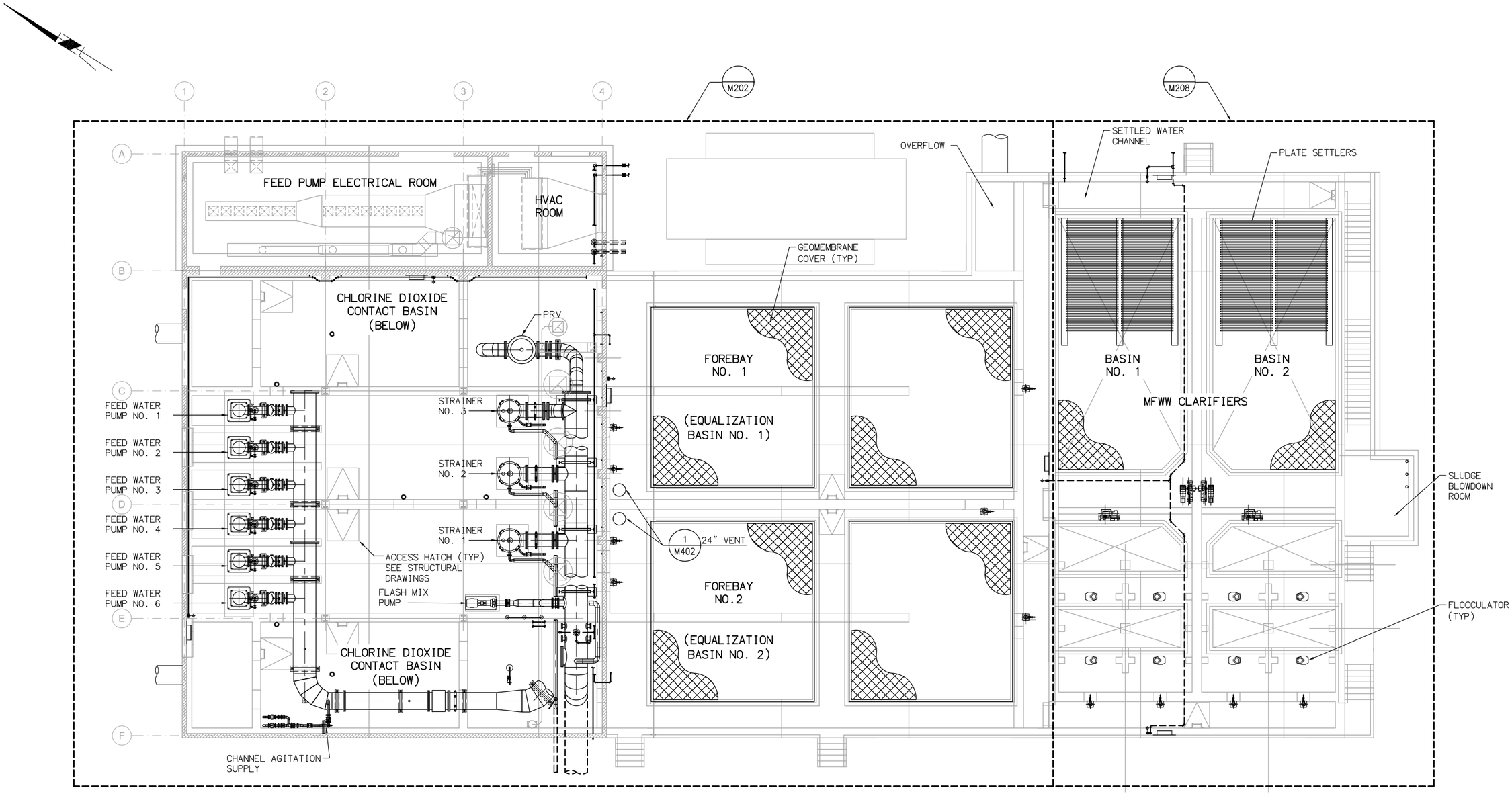

KEY PLAN
SCALE: 1/8" = 1'-0"

FILENAME: 8127A10-6232-M201.dwg
LAST UPDATED: 01/05/2012 09:35 AM
LAST SAVED BY: trea

No.	DATE	REVISIONS	APPROVED

DESIGNED: DAH
DRAWN: RCM
CHECKED: TSD

RBF CONSULTING
carollo
IRVINE RANCH WATER DISTRICT

JIM MEYERHOFER	RCE NO. 48451	PROJECT MANAGER	DATE
CINDY MILLER	RCE NO. 58116	PROJECT MANAGER	DATE
PATRICIA UEMATSU	RCE NO. 36762	PRINCIPAL ENGINEER	DATE

IRVINE RANCH WATER DISTRICT
BAKER WATER TREATMENT PLANT
PROJECT NO. 11218

FOREBAY, MF PUMP STATION, STRAINERS, AND MFWW CLARIFIER KEY PLAN

DRAWING M201
SHEET 313 OF 632

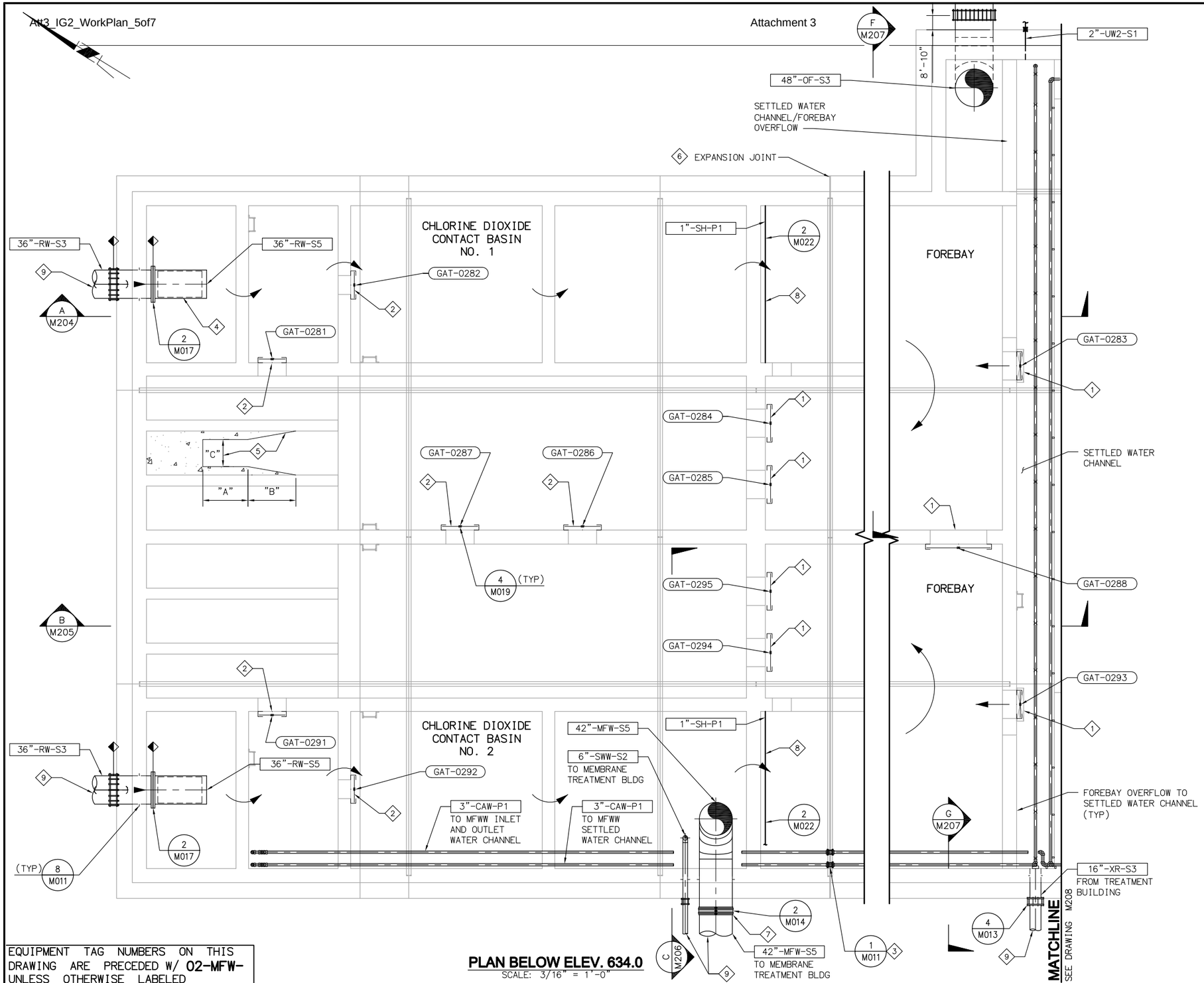

EQUIPMENT TAG NUMBERS ON THIS DRAWING ARE PRECEDED W/ **02-MFW-** UNLESS OTHERWISE LABELED

PLAN BELOW ELEV. 634.0
SCALE: 3/16" = 1'-0"

NOTES

SOC WMA

1. REFER TO M001-MECHANICAL NOTES FOR ADDITIONAL INFORMATION AND REQUIREMENTS.
2. WHERE NO CONSTRUCTION DETAILS ARE SHOWN OR NOTED FOR ANY PART OF THE WORK, DETAILS SHALL BE THE SAME AS FOR OTHER SIMILAR WORK.
3. FOR CONTINUATION OF PIPING OUTSIDE OF STRUCTURES, SEE CIVIL DRAWINGS.

KEY NOTES

1. NO = NORMALLY OPEN
2. NC = NORMALLY CLOSED
3. RESTRICTED EXPANSION JOINT. TYPICAL OF ALL PROCESS PIPING CROSSING BUILDING EXPANSION JOINTS.
4. CONTRACTOR TO PROVIDE A 36" ENERGY DISSIPATOR PER DETAIL 1/M204.
5. CONTRACTOR TO COORDINATE WITH PUMP SUPPLIER TO DETERMINE DISTANCE "A" IS 2.5 TIMES SUCTION BELL DIAMETER. TAPERED FILLER WALL DIMENSION "B" SHOULD BE DETERMINED BY TAPERING DISTANCE "A" TO MEET PUMP BAY WALL AT A 10° ANGLE. TYPICAL FOR ALL 6 BAYS ON THIS DRAWING. DIMENSION "C" IS 2 TIMES SUCTION BELL DIAMETER. CONTRACTOR TO CONFIRM REQUIREMENTS WITH HI STANDARDS.
6. RESTRICTED EXPANSION JOINT.
7. PROVIDE RESTRAINED FLEXIBLE CONNECTION AT WALL PENETRATION. FLEXIBLE CONNECTION SHALL BE MADE USING VICTAULIC DEPEND-O-LOK F X F MODIFIED COUPLINGS (OR EQUAL). PROVIDE SECOND COUPLING AT A MINIMUM DISTANCE REQUIRED BY COUPLING MANUFACTURER TO FACILITATE A DIFFERENTIAL SETTLEMENT OF 1-INCH BETWEEN PIPE AND BUILDING. REFER TO SECTION 15162 FOR COUPLING REQUIREMENTS.
8. SODIUM HYPOCHLORITE INJECTION POINT.
9. REFER TO CIVIL DRAWINGS FOR CONTINUATION.

FILENAME:8127A10-6232-M202.dwg
LAST UPDATED: 01/26/2012 12:53 PM
LAST SAVED BY: trea

No.	DATE	REVISIONS	APPROVED

DESIGNED: DAH
DRAWN: RCM
CHECKED: TSD

RBF CONSULTING

carollo

IRVINE RANCH WATER DISTRICT

JIM MEYERHOFER	RCE NO. 48451	PROJECT MANAGER	DATE
CINDY MILLER	RCE NO. 58116	PROJECT MANAGER	DATE
PATRICIA UEMATSU	RCE NO. 36762	PRINCIPAL ENGINEER	DATE

IRVINE RANCH WATER DISTRICT
BAKER WATER TREATMENT PLANT
PROJECT NO. 11218

FOREBAY AND MF PUMP STATION BOTTOM PLAN

DRAWING
M202
SHEET

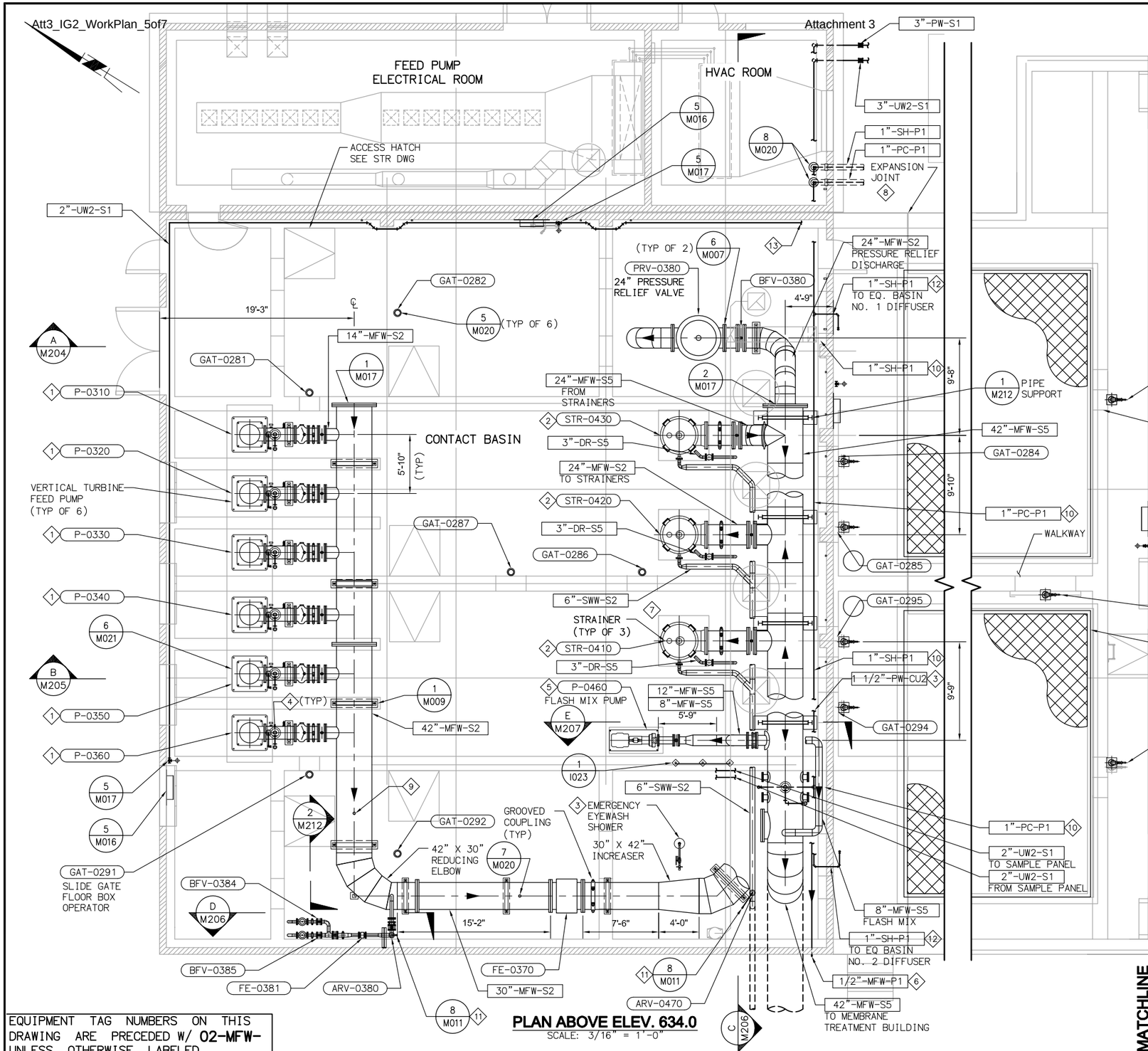

PLAN ABOVE ELEV. 634.0

SCALE: 3/16" = 1'-0"

EQUIPMENT TAG NUMBERS ON THIS DRAWING ARE PRECEDED W/ **02-MFW-** UNLESS OTHERWISE LABELED

NOTES

SOC WMA

1. REFER TO M001–MECHANICAL NOTES FOR ADDITIONAL INFORMATION AND REQUIREMENTS.
2. WHERE NO CONSTRUCTION DETAILS ARE SHOWN OR NOTED FOR ANY PART OF THE WORK, DETAILS SHALL BE THE SAME AS FOR OTHER SIMILAR WORK.
3. FOR CONTINUATION OF PIPING OUTSIDE OF STRUCTURES, SEE CIVIL DRAWINGS.

KEY NOTES

1. SEE MEMBRANE FEED PUMP SCHEDULE ON DRAWING M205.
2. SEE FEED WATER STRAINER SCHEDULE ON DRAWING M205.
3. SEE PLUMBING DRAWINGS FOR FLOOR DRAIN, SAFETY SHOWER, AND POTABLE WATER LOCATIONS AND PIPING.
4. PLUMB DISCHARGE OF AIR RELEASE VALVE BACK TO FOREBAY.
5. ADJUST PUMP BASE DIMENSIONS BASED ON SELECTED PUMP. SEE STRUCTURAL TYPICAL DETAILS FOR REINFORCEMENT REQUIREMENTS. MAINTAIN LENGTH OF STRAIGHT PIPE AS INDICATED.
6. NOT USED.
7. STRAINERS SHALL BE SUPPLIED WITH PIPING CONNECTION ORIENTATIONS AS SHOWN.
8. RESTRICTED EXPANSION JOINT. TYPICAL OF ALL PROCESS PIPING CROSSING BUILDING EXPANSION JOINT.
9. PROVIDE 1–INCH NPT TAP FOR PIT–0371.
10. DOUBLE CONTAIN CHEMICAL PIPING. REFER TO SPECIFICATION 15293.
11. CONNECT AIR RELEASE DRAIN TO FLOOR THIMBLE W/FLANGE.
12. TERMINATE DOUBLE CONTAINMENT BELOW EQUALIZATION DECK.
13. CONNECT TO 2" UW2 LINE ON WALL.

FILENAME:8127A10–6232–M203.dwg
LAST UPDATED: 01/26/2012 05:38 AM
LAST SAVED BY: treo

No.	DATE	REVISIONS	APPROVED

DESIGNED: DAH
DRAWN: RCM
CHECKED: TSD

RBF CONSULTING
carollo
IRVINE RANCH WATER DISTRICT

JIM MEYERHOFER	RCE NO. 48451	PROJECT MANAGER	DATE
CINDY MILLER	RCE NO. 58116	PROJECT MANAGER	DATE
PATRICIA UEMATSU	RCE NO. 36762	PRINCIPAL ENGINEER	DATE

IRVINE RANCH WATER DISTRICT
BAKER WATER TREATMENT PLANT
PROJECT NO. 11218

FOREBAY AND MF PUMP STATION TOP PLAN

DRAWING **M203**
SHEET **315** OF **632**

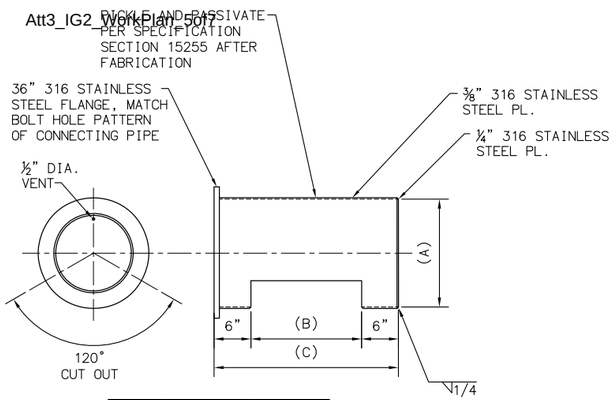

PIPE SIZE (A)	(B)	(C)
36"	60"	72"

DETAIL 1 / –
SCALE: N.T.S.

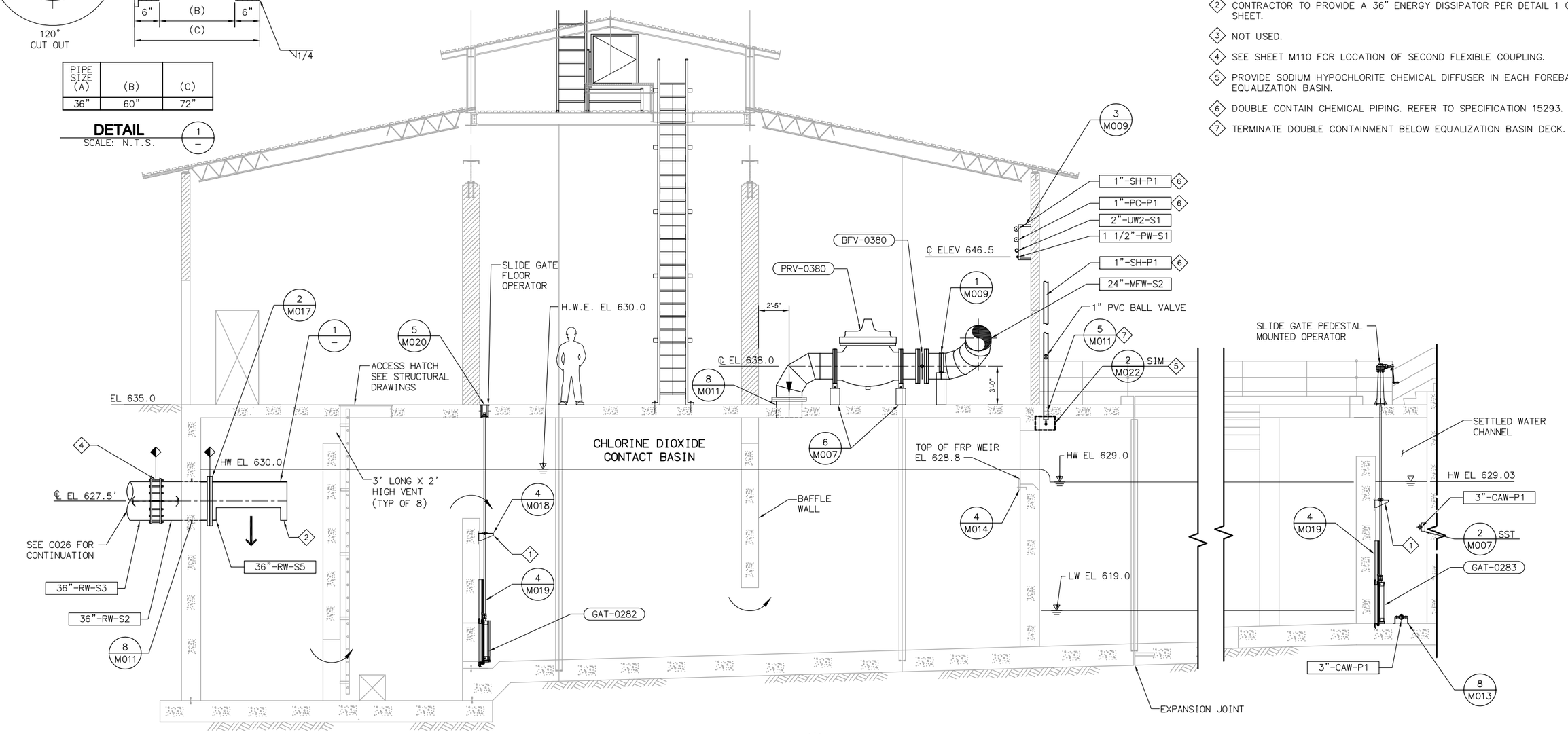

SECTION A / M203
SCALE: 1/4" = 1'-0"

NOTES

1. REFER TO M001–MECHANICAL NOTES FOR ADDITIONAL INFORMATION AND REQUIREMENTS.
2. WHERE NO CONSTRUCTION DETAILS ARE SHOWN OR NOTED FOR ANY PART OF THE WORK, DETAILS SHALL BE THE SAME AS FOR OTHER SIMILAR WORK.
3. FOR CONTINUATION OF PIPING OUTSIDE OF STRUCTURES, SEE CIVIL DRAWINGS.

KEY NOTES

1. INSTALL STAINLESS STEEL INTERMEDIATE GUIDE SUPPORTS FURNISHED BY SUPPLIER (MINIMUM OF ONE PER GATE OR VALVE).
2. CONTRACTOR TO PROVIDE A 36" ENERGY DISSIPATOR PER DETAIL 1 ON THIS SHEET.
3. NOT USED.
4. SEE SHEET M110 FOR LOCATION OF SECOND FLEXIBLE COUPLING.
5. PROVIDE SODIUM HYPOCHLORITE CHEMICAL DIFFUSER IN EACH FOREBAY EQUALIZATION BASIN.
6. DOUBLE CONTAIN CHEMICAL PIPING. REFER TO SPECIFICATION 15293.
7. TERMINATE DOUBLE CONTAINMENT BELOW EQUALIZATION BASIN DECK.

EQUIPMENT TAG NUMBERS ON THIS DRAWING ARE PRECEDED W/ **02-MFW-** UNLESS OTHERWISE LABELED

No.	DATE	REVISIONS	APPROVED

DESIGNED: DAH
DRAWN: RCM
CHECKED: TSD

RBF CONSULTING

carollo

IRVINE RANCH WATER DISTRICT

JIM MEYERHOFER	RCE NO. 48451	PROJECT MANAGER	DATE
CINDY MILLER	RCE NO. 58116	PROJECT MANAGER	DATE
PATRICIA UEMATSU	RCE NO. 36762	PRINCIPAL ENGINEER	DATE

IRVINE RANCH WATER DISTRICT
BAKER WATER TREATMENT PLANT
PROJECT NO. 11218

FOREBAY AND MF PUMP STATION SECTION

DRAWING
M204
SHEET
316 OF 632

FILENAME: 8127A10-6232-M204.dwg
LAST UPDATED: 01/26/2012 01:23 PM
LAST SAVED BY: trea

Attachment 3

DESCRIPTION	PUMP	PRESSURE INDICATOR	DISCHARGE AIR RELEASE VALVE	CHECK VALVE	DISCHARGE ISOLATION VALVE
MEMBRANE FEED WATER PUMP	P-0310	PI-0310	ARV-0310	CV-0310	BFV-0310
	P-0320	PI-0320	ARV-0320	CV-0320	BFV-0320
	P-0330	PI-0330	ARV-0330	CV-0330	BFV-0330
	P-0340	PI-0340	ARV-0340	CV-0340	BFV-0340
	P-0350	PI-0350	ARV-0350	CV-0350	BFV-0350
	P-0360	PI-0360	ARV-0360	CV-0360	BFV-0360

DESCRIPTION	STRAINER	INLET ISOLATION VALVE	INLET PRESSURE INDICATOR	DISCHARGE PRESSURE INDICATOR	DISCHARGE ISOLATION VALVE	WASTE DISCHARGE ISOLATION VALVE	VESSEL AIR RELEASE VALVE
FEED WATER STRAINERS	STR-0410	BFV-0411	PI-0410	PI-0411	BFV-0412	PV-0410	ARV-0410
	STR-0420	BFV-0421	PI-0420	PI-0421	BFV-0422	PV-0420	ARV-0420
	STR-0430	BFV-0431	PI-0430	PI-0431	BFV-0432	PV-0430	ARV-0430

NOTES

SOC WMA

1. REFER TO M001-MECHANICAL NOTES FOR ADDITIONAL INFORMATION AND REQUIREMENTS.
2. WHERE NO CONSTRUCTION DETAILS ARE SHOWN OR NOTED FOR ANY PART OF THE WORK, DETAILS SHALL BE THE SAME AS FOR OTHER SIMILAR WORK.

KEY NOTES

1. PLUMB DISCHARGE OF AIR RELEASE VALVE BACK TO PUMP BAY.
2. ADJUST PUMP BASE ELEVATIONS BASED ON SELECTED PUMP. SEE STRUCTURAL DRAWINGS FOR REINFORCEMENT REQUIREMENTS.
3. CONTRACTOR TO COORDINATE WITH PUMP SUPPLIER TO DETERMINE DISTANCE FROM TOP OF PUMP BASE TO BOTTOM OF SUCTION BELL "H" SUCH THAT DISTANCE "C" IS LESS THAN 0.5 TIMES THE BELL DIAMETER, AND MORE THAN 0.3 TIMES BELL DIAMETER. CONTRACTOR TO CONFIRM DIMENSIONS IN ACCORDANCE W/HI STANDARDS.
4. INSTALL STAINLESS STEEL INTERMEDIATE GUIDE SUPPORTS FURNISHED BY SUPPLIER (MINIMUM OF ONE PER GATE OR VALVE).
5. CONTRACTOR TO CONSTRUCT FILLER WALL SUCH THAT DISTANCE FROM CENTERLINE OF SUCTION BELL TO END OF PUMP BAY IS EQUAL TO 0.75 TIMES THE SUCTION BELL DIAMETER (DIMENSION "D").
6. STRAINERS SHALL BE SUPPLIED WITH PIPING CONNECTION ORIENTATIONS AS SHOWN.
7. CUT PIPING FLUSH WITH BOTTOM SLAB. PROVIDE 3-INCH VERTICAL SPACE BETWEEN FLANGE FACE AND TOP OF FINISHED SLAB.
8. COORDINATE STRAINER BACKWASH AND DRAIN LOCATIONS WITH STRAINER SUPPLIER. LOCATE VALVES AND DRAIN/BACKWASH DISCHARGE CONNECTIONS AS SHOWN.
9. CONNECT AIR RELEASE DRAIN TO FLOOR THIMBLE W/FLANGE.

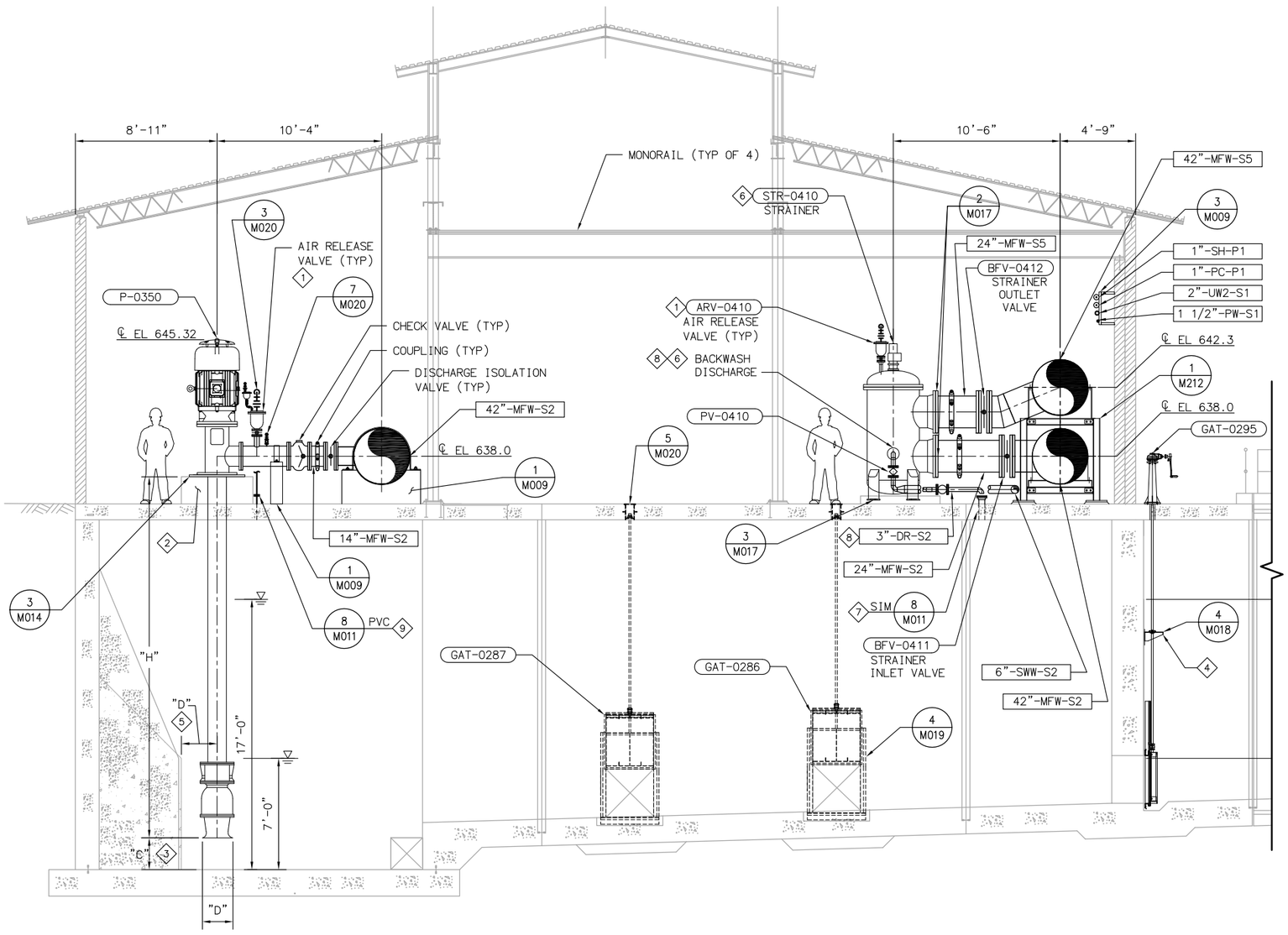

SECTION B M203
SCALE: 1/4" = 1'-0"

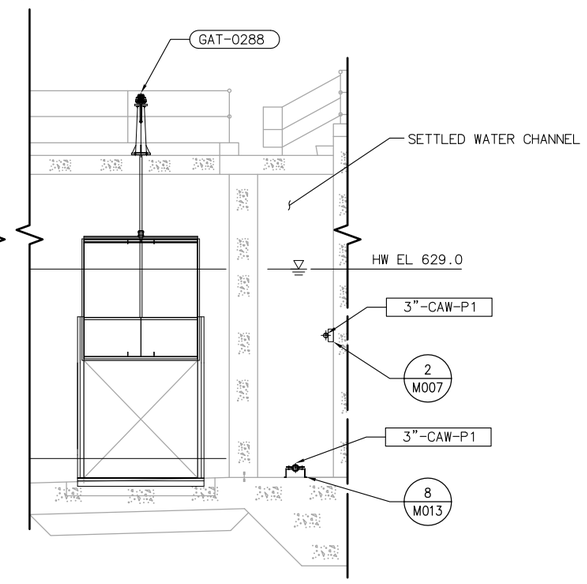

EQUIPMENT TAG NUMBERS ON THIS DRAWING ARE PRECEDED W/ **02-MFW-** UNLESS OTHERWISE LABELED

No.	DATE	REVISIONS	APPROVED

DESIGNED: DAH
DRAWN: RCM
CHECKED: TSD

RBF CONSULTING
carollo
IRVINE RANCH WATER DISTRICT

JIM MEYERHOFER	RCE NO. 48451	PROJECT MANAGER	DATE
CINDY MILLER	RCE NO. 58116	PROJECT MANAGER	DATE
PATRICIA UEMATSU	RCE NO. 36762	PRINCIPAL ENGINEER	DATE

IRVINE RANCH WATER DISTRICT
BAKER WATER TREATMENT PLANT
PROJECT NO. 11218

FOREBAY AND MF PUMP STATION SECTION

DRAWING **M205**
SHEET 317 OF 632

FILENAME: 8127A10-6232-M205.dwg
LAST UPDATED: 01/31/2012 11:09 AM
LAST SAVED BY: treg

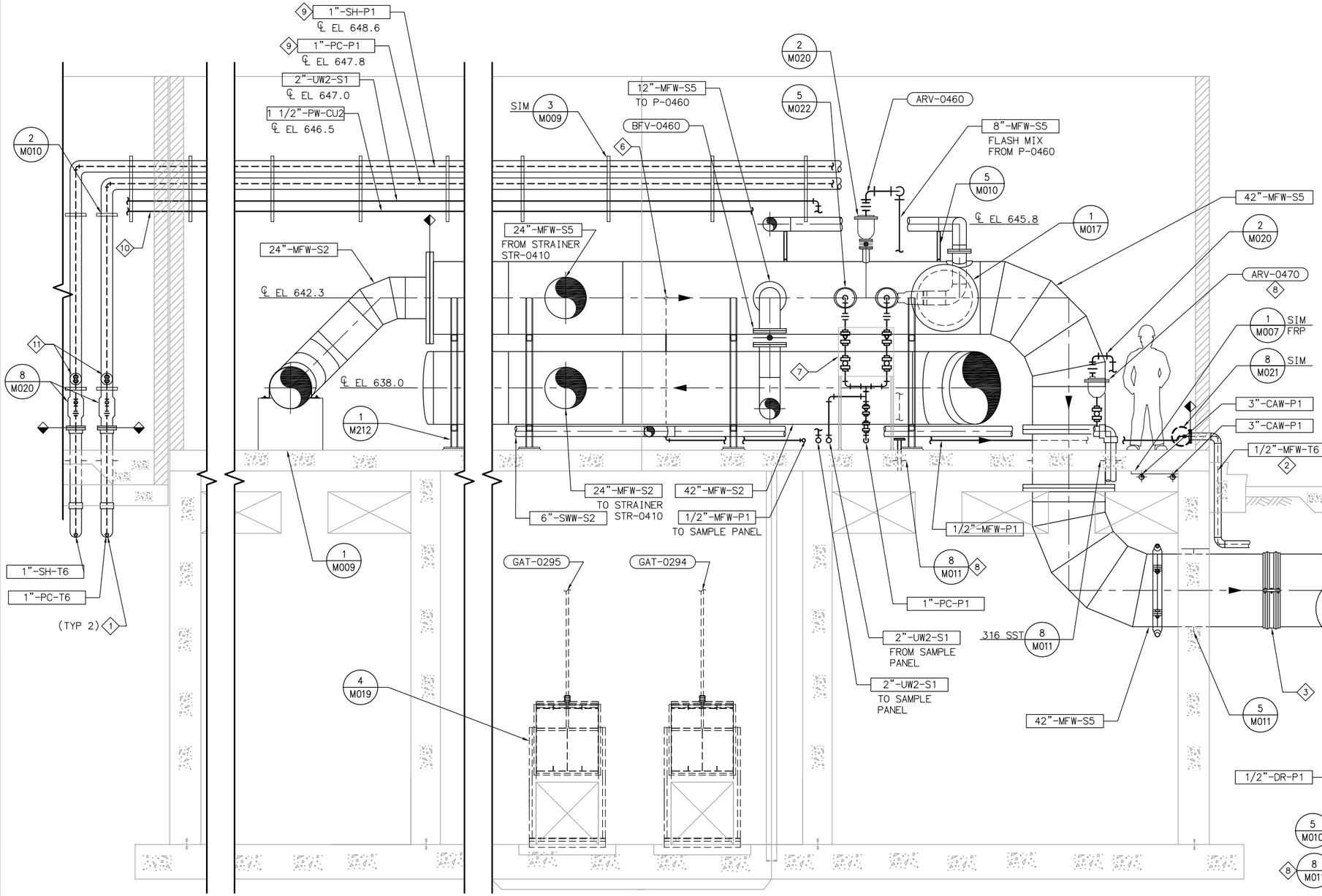

NOTES

1. REFER TO M001–MECHANICAL NOTES FOR ADDITIONAL INFORMATION AND REQUIREMENTS.
2. WHERE NO CONSTRUCTION DETAILS ARE SHOWN OR NOTED FOR ANY PART OF THE WORK, DETAILS SHALL BE THE SAME AS FOR OTHER SIMILAR WORK.
3. FOR CONTINUATION OF PIPING OUTSIDE OF STRUCTURES, SEE CIVIL DRAWINGS.

KEY NOTES

1. CONCRETE ENCASE ALL PIPES UNDER STRUCTURE PER TYPICAL DETAIL 2/M012.
2. ROUTE 1/2"–MFW–T6 INSIDE OF 3" PVC CARRIER PIPE TO TREATMENT BUILDING. PER CIVIL DRAWINGS.
3. PROVIDE RESTRAINED FLEXIBLE CONNECTION AT WALL PENETRATION. FLEXIBLE CONNECTION SHALL BE MADE USING VICTAULIC DEPEND–O–LOK F X F MODIFIED COUPLING (OR EQUAL).
4. NOT USED.
5. NOT USED.
6. PROVIDE 1" NPT MFW SAMPLE TAP DOWNSTREAM OF LAST STRAINER AND UPSTREAM OF FLASH MIX CONNECTIONS.
7. PIPE SUPPORT RACK TO BE DESIGNED BY THE CONTRACTOR AND FABRICATED FROM FRP PRE–FORMED CHANNEL.
8. CONNECT AIR RELEASE DRAIN TO FLOOR THIMBLE W/FLANGE.
9. DOUBLE CONTAIN CHEMICAL PIPING. REFER TO SPECIFICATION 15293.
10. 1½" POTABLE WATER LINE. REFER TO PLUMBING DRAWINGS.
11. 1" PVC BALL VALVE IN DOUBLE CONTAINMENT ACCESS FITTING.

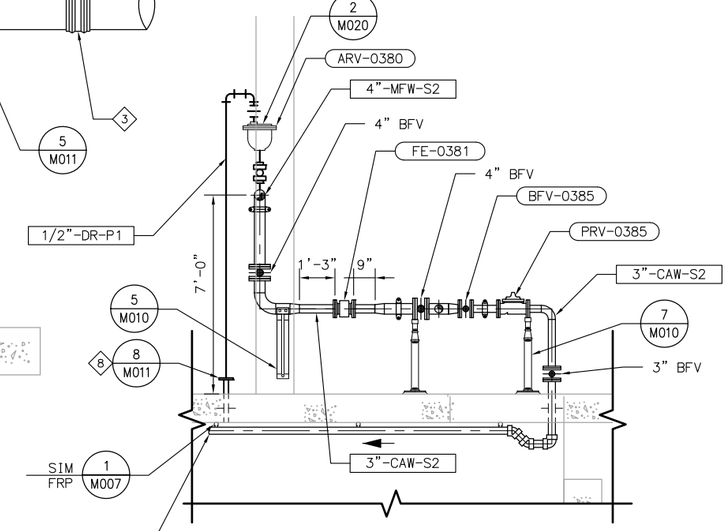

SECTION C M203
SCALE: 3/8"= 1'-0"

SECTION D M203
SCALE: 3/8"= 1'-0"

EQUIPMENT TAG NUMBERS ON THIS DRAWING ARE PRECEDED W/ **02-MFW-** UNLESS OTHERWISE LABELED

No.	DATE	REVISIONS	APPROVED

DESIGNED: DAH
DRAWN: RCM
CHECKED: TSD

RBF CONSULTING

carollo

IRVINE RANCH WATER DISTRICT

JIM MEYERHOFER	RCE NO. 48451	PROJECT MANAGER	DATE
CINDY MILLER	RCE NO. 58116	PROJECT MANAGER	DATE
PATRICIA UEMATSU	RCE NO. 36762	PRINCIPAL ENGINEER	DATE

IRVINE RANCH WATER DISTRICT
BAKER WATER TREATMENT PLANT
PROJECT NO. 11218

FOREBAY AND MF PUMP STATION SECTIONS

DRAWING **M206**

SHEET **318** OF **632**

FILENAME:8127A10–6232–M206.dwg
LAST UPDATED: 01/31/2012 11:10 AM
LAST SAVED BY: treo

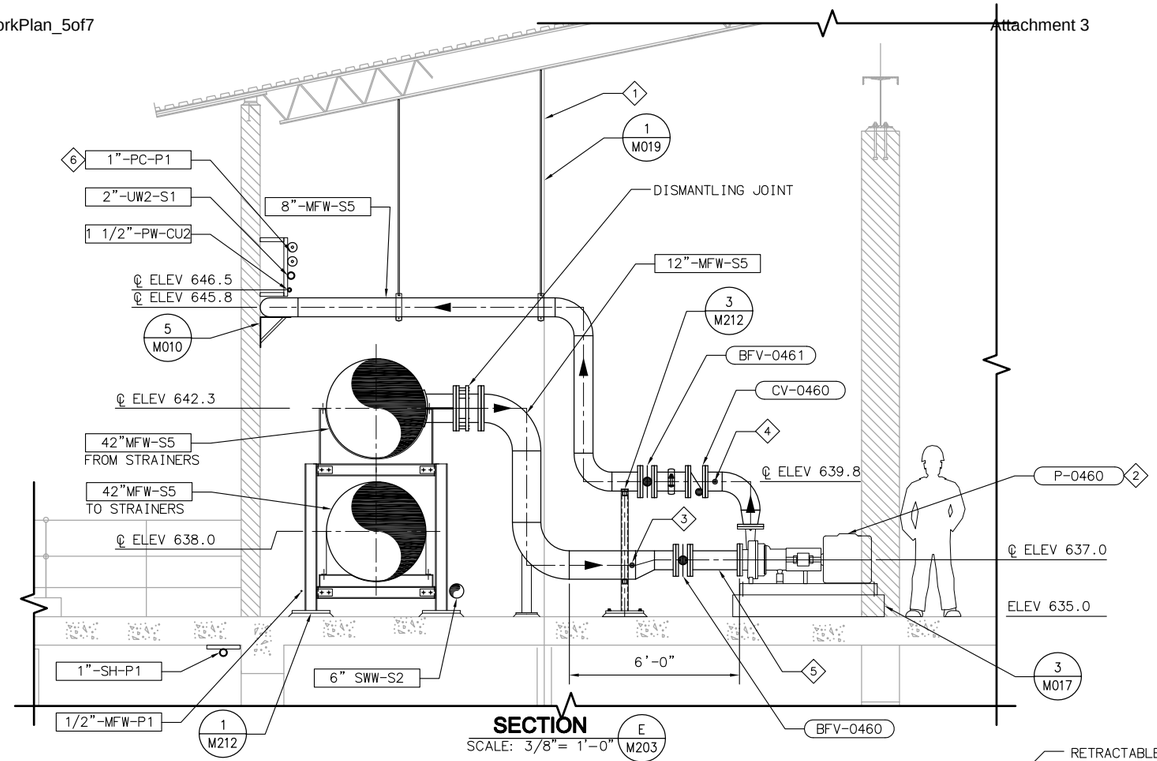

SECTION
SCALE: 3/8"= 1'-0" (E / M203)

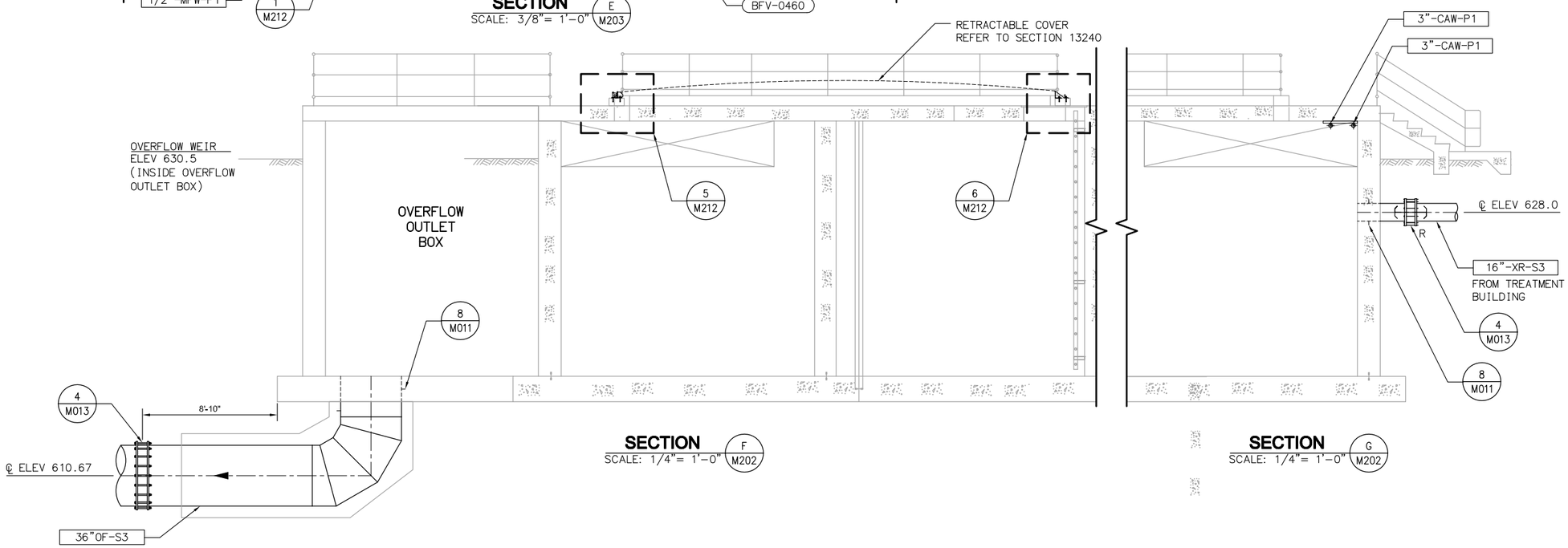

SECTION
SCALE: 1/4"= 1'-0" (F / M202)

SECTION
SCALE: 1/4"= 1'-0" (G / M202)

NOTES

1. REFER TO M001–MECHANICAL NOTES FOR ADDITIONAL INFORMATION AND REQUIREMENTS.
2. WHERE NO CONSTRUCTION DETAILS ARE SHOWN OR NOTED FOR ANY PART OF THE WORK, DETAILS SHALL BE THE SAME AS FOR OTHER SIMILAR WORK.
3. FOR CONTINUATION OF PIPING OUTSIDE OF STRUCTURES, SEE CIVIL DRAWINGS.

KEY NOTES

1. ALL PIPE SUPPORT FRAMING TO BE GALVANIZED STEEL, TYP UNLESS OTHERWISE NOTED. ISOLATE STAINLESS STEEL PIPE WITH NEOPRENE PAD.
2. ADJUST PUMP BASE DIMENSIONS BASED ON SELECTED PUMP. SEE STRUCTURAL TYPICAL DETAILS FOR REINFORCEMENT REQUIREMENTS. MAINTAIN LENGTH OF STRAIGHT PIPE AS INDICATED.
3. PROVIDE 1" SAMPLE TAP FOR FSL–040 INSTALLATION. SEE INSTRUMENTATION DRAWINGS FOR DETAILS.
4. PROVIDE 1" SAMPLE TAP FOR PE–0460 INSTALLATION. SEE INSTRUMENTATION DRAWINGS FOR DETAILS.
5. REDUCE TO MATCH PUMP SUCTION SIZE.
6. DOUBLE CONTAIN CHEMICAL PIPING. REFER TO SPECIFICATION 15293.

EQUIPMENT TAG NUMBERS ON THIS DRAWING ARE PRECEDED W/ **02–MFW–** UNLESS OTHERWISE LABELED

No.	DATE	REVISIONS	APPROVED

DESIGNED: DAH
DRAWN: RCM
CHECKED: TSD

RBF CONSULTING

carollo

IRVINE RANCH WATER DISTRICT

JIM MEYERHOFER	RCE NO. 48451	PROJECT MANAGER	DATE
CINDY MILLER	RCE NO. 58116	PROJECT MANAGER	DATE
PATRICIA UEMATSU	RCE NO. 36762	PRINCIPAL ENGINEER	DATE

IRVINE RANCH WATER DISTRICT
BAKER WATER TREATMENT PLANT
PROJECT NO. 11218

FOREBAY AND MF PUMP STATION SECTION AND DETAIL

DRAWING **M207**
SHEET 319 OF 632

FILENAME: 8127A10–6232–M207.dwg
LAST UPDATED: 01/31/2012 11:11 AM
LAST SAVED BY: trea

Att3_IG2_WorkPlan_5of7

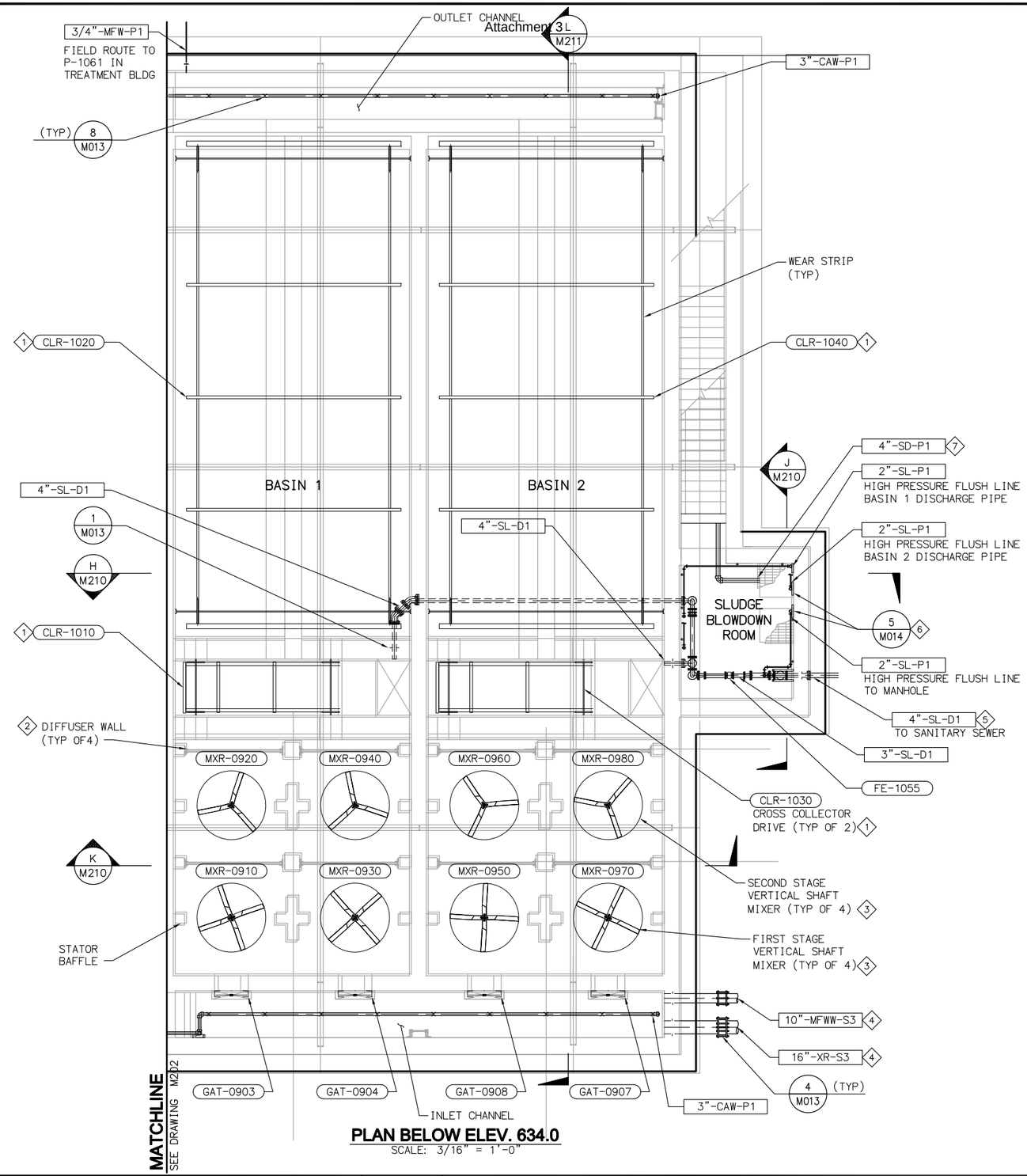

PLAN BELOW ELEV. 634.0

SCALE: 3/16" = 1'-0"

NOTES

SOC WMA

1. REFER TO M001-MECHANICAL NOTES FOR ADDITIONAL INFORMATION AND REQUIREMENTS.
2. WHERE NO CONSTRUCTION DETAILS ARE SHOWN OR NOTED FOR ANY PART OF THE WORK, DETAILS SHALL BE THE SAME AS FOR OTHER SIMILAR WORK.
3. FOR CONTINUATION OF PIPING OUTSIDE OF STRUCTURES, SEE CIVIL DRAWINGS.

KEY NOTES

1. COORDINATE EXACT LAYOUT WITH RECTANGULAR SEDIMENTATION BASIN SLUDGE COLLECTOR SUPPLIER..
2. SEE STRUCTURAL DRAWINGS FOR DIFFUSER WALL CONFIGURATION. SEE DRAWING S201.
3. REFER TO SPECIFICATION SECTION 11229.
4. REFER TO CIVIL C027 FOR 10" MFWW AND 16" XR PIPE EL @ STRUCTURE.
5. REFER TO CIVIL C027 FOR CONTINUATION OF 4"-SL-D1 PIPE.
6. SEE PLUMBING DRAWINGS, AND PIDS FOR FLOOR DRAINS AND PUMP CONFIGURATION.
7. 4" PVC SHALL TERMINATE IN SUMP, 12" ABOVE SUMP BOTTOM.

EQUIPMENT TAG NUMBERS ON THIS DRAWING ARE PRECEDED W/ **06-MFWW-** UNLESS OTHERWISE LABELED

No.	DATE	REVISIONS	APPROVED

DESIGNED: DAH
DRAWN: RCM
CHECKED: TSD

RBF CONSULTING

carollo

IRVINE RANCH WATER DISTRICT

JIM MEYERHOFER	RCE NO. 48451	PROJECT MANAGER	DATE
CINDY MILLER	RCE NO. 58116	PROJECT MANAGER	DATE
PATRICIA UEMATSU	RCE NO. 36762	PRINCIPAL ENGINEER	DATE

IRVINE RANCH WATER DISTRICT
BAKER WATER TREATMENT PLANT
PROJECT NO. 11218

MFWW CLARIFIER BOTTOM PLAN

DRAWING **M208**
SHEET **320** OF **632**

FILENAME: 8127A10-6232-M208.dwg
LAST UPDATED: 01/26/2012 05:46 AM
LAST SAVED BY: trea

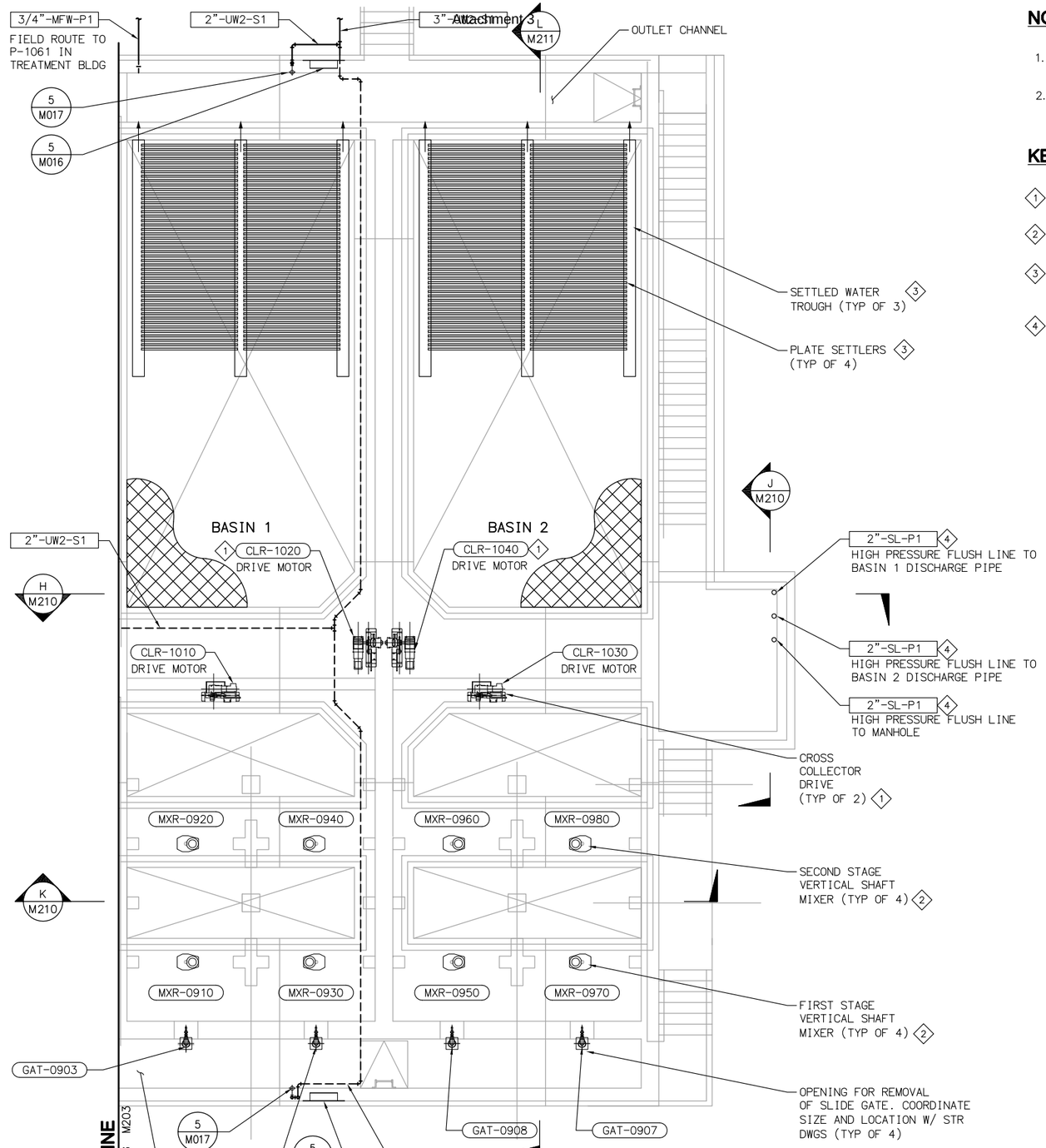

PLAN ABOVE ELEV. 634.0

SCALE: 3/16" = 1'-0"

NOTES

SOC WMA

1. REFER TO M001–MECHANICAL NOTES FOR ADDITIONAL INFORMATION AND REQUIREMENTS.
2. WHERE NO CONSTRUCTION DETAILS ARE SHOWN OR NOTED FOR ANY PART OF THE WORK, DETAILS SHALL BE THE SAME AS FOR OTHER SIMILAR WORK.

KEY NOTES

1. COORDINATE EXACT LAYOUT WITH RECTANGULAR SEDIMENTATION BASIN SLUDGE COLLECTOR SUPPLIER.
2. SEE STRUCTURAL DRAWINGS FOR DIFFUSER WALL CONFIGURATION. SEE DRAWING S201.
3. REFER TO SPECIFICATION SECTION 11350. CONTRACTOR SHALL BE RESPONSIBLE FOR INSTALLATION OF PLATE SETTLERS, SETTLED WATER TROUGHS, AND PLATE SUPPORT SYSTEM, PER MANUFACTURER'S INSTRUCTIONS AND TOLERANCES.
4. PROVIDE SIGNS CLEARLY IDENTIFYING EACH QUICK DISCONNECT.

EQUIPMENT TAG NUMBERS ON THIS DRAWING ARE PRECEDED W/ **06-MFWW-** UNLESS OTHERWISE LABELED

No.	DATE	REVISIONS	APPROVED

DESIGNED: DAH
DRAWN: RCM
CHECKED: TSD

RBF CONSULTING

carollo

IRVINE RANCH WATER DISTRICT

JIM MEYERHOFER	RCE NO. 48451	PROJECT MANAGER	DATE
CINDY MILLER	RCE NO. 58116	PROJECT MANAGER	DATE
PATRICIA UEMATSU	RCE NO. 36762	PRINCIPAL ENGINEER	DATE

IRVINE RANCH WATER DISTRICT
BAKER WATER TREATMENT PLANT
PROJECT NO. 11218

MFWW CLARIFIER TOP PLAN

DRAWING **M209**
SHEET **321** OF **632**

FILENAME:8127A10-6232-M209.dwg
LAST UPDATED: 01/25/2012 01:17 PM
LAST SAVED BY: trea

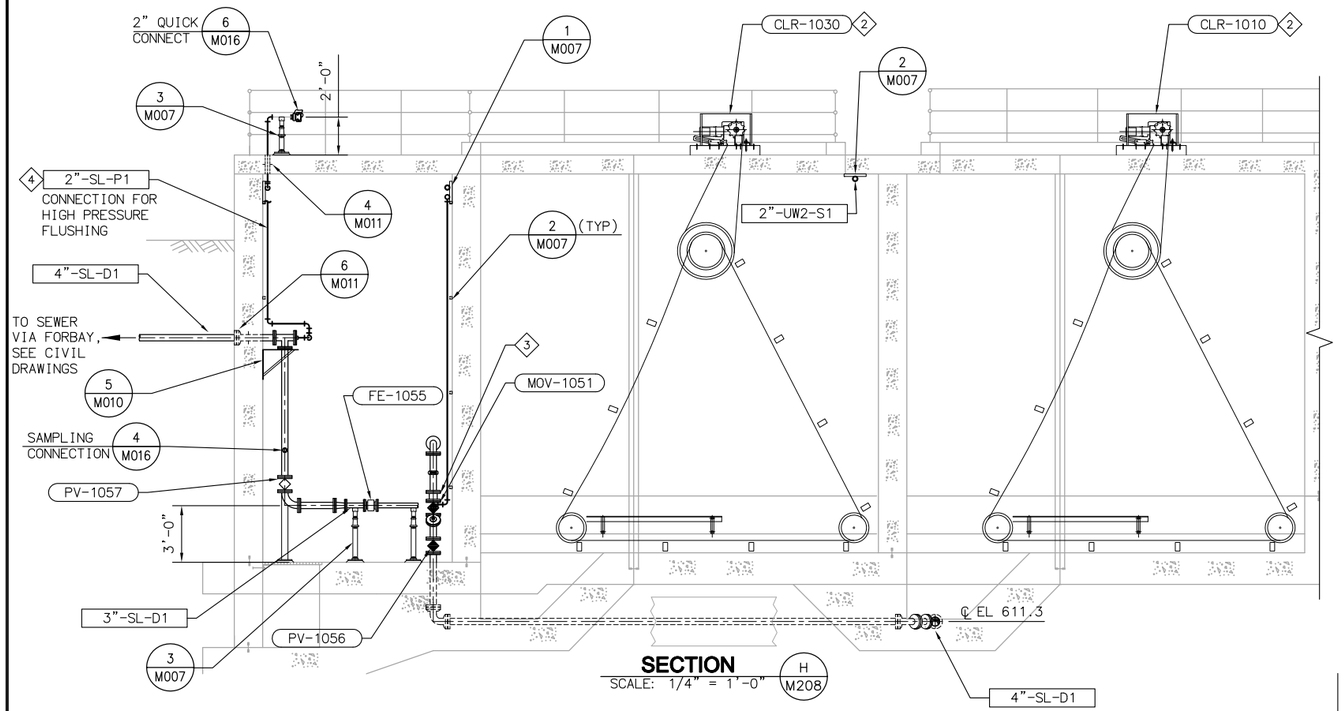

SECTION
SCALE: 1/4" = 1'-0" (H M208)

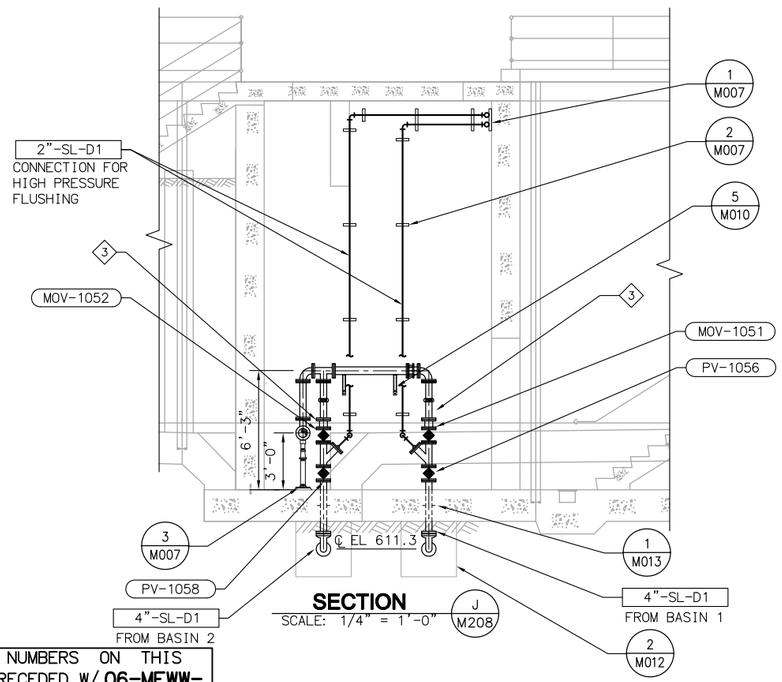

SECTION
SCALE: 1/4" = 1'-0" (J M208)

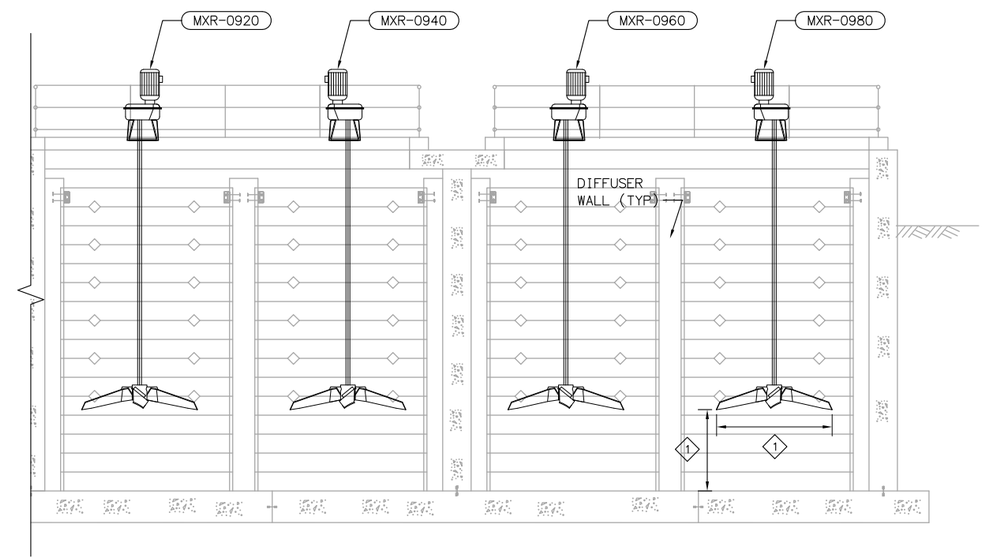

SECTION
SCALE: 1/4" = 1'-0" (K M208)

NOTES

1. REFER TO M001–MECHANICAL NOTES FOR ADDITIONAL INFORMATION AND REQUIREMENTS.
2. WHERE NO CONSTRUCTION DETAILS ARE SHOWN OR NOTED FOR ANY PART OF THE WORK, DETAILS SHALL BE THE SAME AS FOR OTHER SIMILAR WORK.

KEY NOTES

1. REFER TO SPECIFICATION SECTION 11229.
2. COORDINATE EXACT LOCATION WITH CHAIN AND FLIGHT SUPPLIER.
3. SLUDGE SIGHT GLASS. JOHN C. ERNST CO. MODEL 255 OR EQUAL.
4. PROVIDE SIGNS CLEARLY IDENTIFYING EACH QUICK DISCONNECT.

EQUIPMENT TAG NUMBERS ON THIS DRAWING ARE PRECEDED W/ **06-MFWW-** UNLESS OTHERWISE LABELED

No.	DATE	REVISIONS	APPROVED

DESIGNED: DAH
DRAWN: RCM
CHECKED: TSD

RBF CONSULTING

carollo

IRVINE RANCH WATER DISTRICT

JIM MEYERHOFER	RCE NO. 48451	PROJECT MANAGER	DATE
CINDY MILLER	RCE NO. 58116	PROJECT MANAGER	DATE
PATRICIA UEMATSU	RCE NO. 36762	PRINCIPAL ENGINEER	DATE

IRVINE RANCH WATER DISTRICT
BAKER WATER TREATMENT PLANT
PROJECT NO. 11218

MFWW CLARIFIER SECTION

DRAWING **M210**
SHEET **322** OF **632**

FILENAME: 8127A10-6232-M210.dwg
LAST UPDATED: 01/25/2012 01:18 PM
LAST SAVED BY: trea

NOTES

1. REFER TO GENERAL MECHANICAL NOTES FOR ADDITIONAL INFORMATION AND REQUIREMENTS.
2. WHERE NO CONSTRUCTION DETAILS ARE SHOWN OR NOTED FOR ANY PART OF THE WORK, DETAILS SHALL BE THE SAME AS FOR OTHER SIMILAR WORK.

KEY NOTES

1. REFER TO SPECIFICATION SECTION 11229.
2. COORDINATE EXACT LOCATION WITH CHAIN AND FLIGHT SUPPLIER.
3. SEE STRUCTURAL DRAWINGS FOR DIFFUSER WALL CONFIGURATION. SEE DRAWING S201.
4. INSTALL STAINLESS STEEL INTERMEDIATE GUIDE SUPPORTS FURNISHED BY SUPPLIER (MINIMUM OF ONE PER GATE OR VALVE).
5. INSTALL STAINLESS STEEL INTERMEDIATE GUIDE SUPPORTS FURNISHED BY SUPPLIER, MINIMUM OF ONE PER GATE OR VALVE.

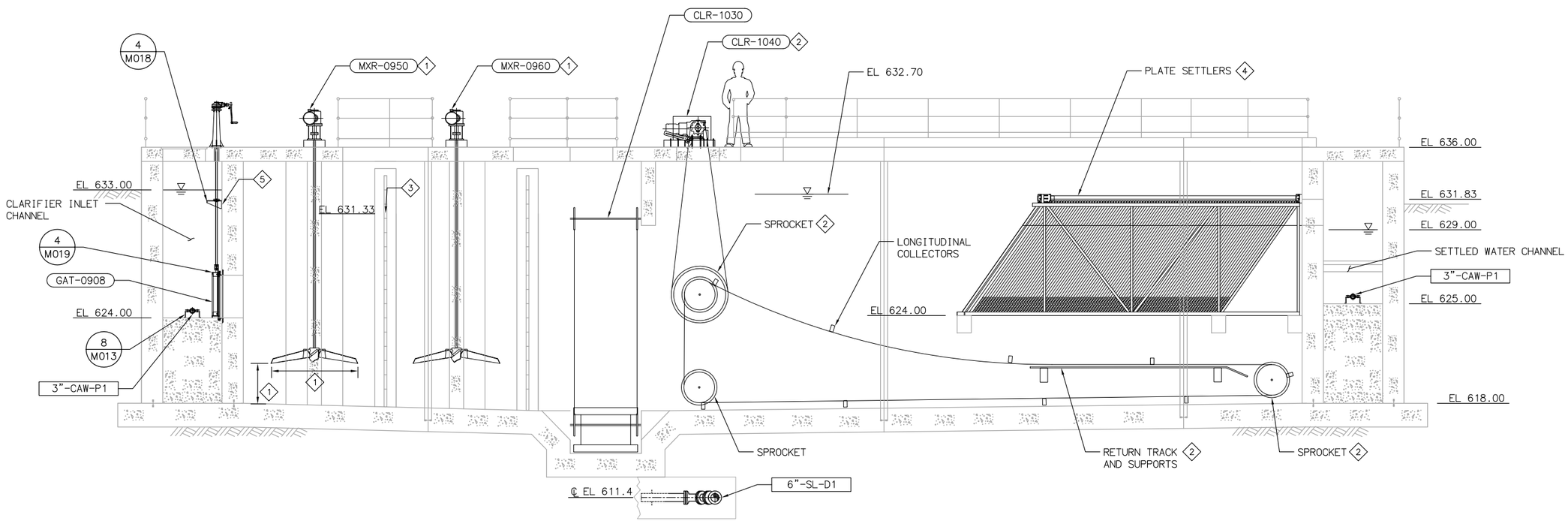

SECTION L / M208
SCALE: 1/4" = 1'-0"

EQUIPMENT TAG NUMBERS ON THIS DRAWING ARE PRECEDED W/ **06-MFWW-** UNLESS OTHERWISE LABELED

No.	DATE	REVISIONS	APPROVED

DESIGNED: DAH
DRAWN: RCM
CHECKED: TSD

RBF CONSULTING

carollo

IRVINE RANCH WATER DISTRICT

JIM MEYERHOFER	RCE NO. 48451	PROJECT MANAGER	DATE
CINDY MILLER	RCE NO. 58116	PROJECT MANAGER	DATE
PATRICIA UEMATSU	RCE NO. 36762	PRINCIPAL ENGINEER	DATE

IRVINE RANCH WATER DISTRICT
BAKER WATER TREATMENT PLANT
PROJECT NO. 11218

MFWW CLARIFIER SECTION

DRAWING **M211**
SHEET **323** OF **632**

FILENAME: 8127A10-6232-M211.dwg
LAST UPDATED: 01/31/2012 11:12 AM
LAST SAVED BY: trea

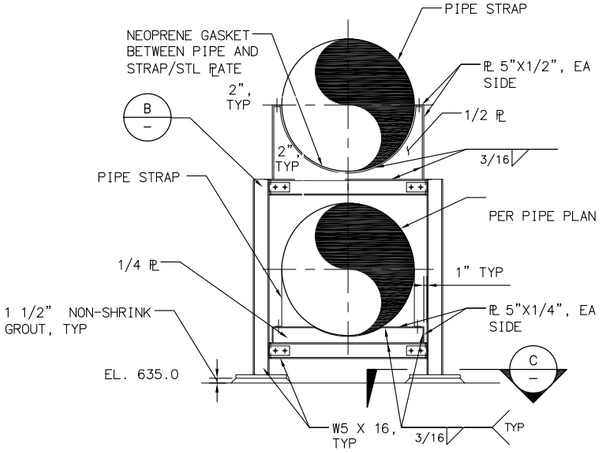

DETAIL 1 / M203
SCALE: 1/2"= 1'-0"

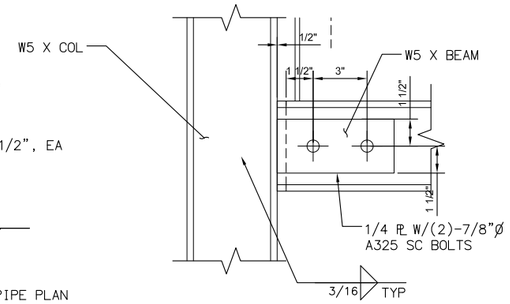

DETAIL B
N.T.S.

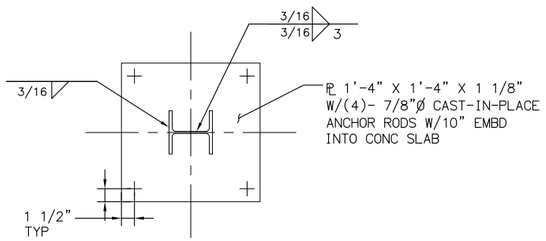

SECTION C
N.T.S.

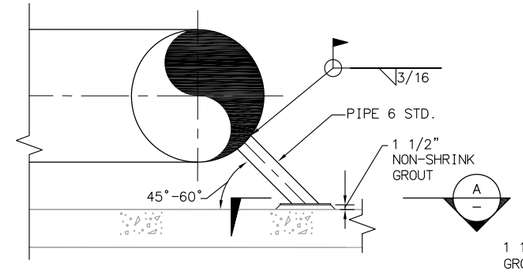

DETAIL 2 / M203
SCALE: 1/2" = 1'-0"

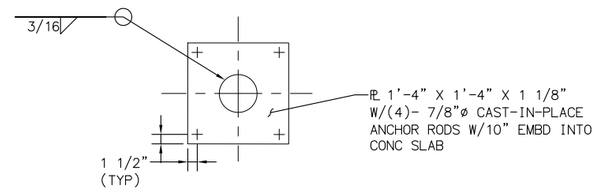

DETAIL D
SCALE: N.T.S

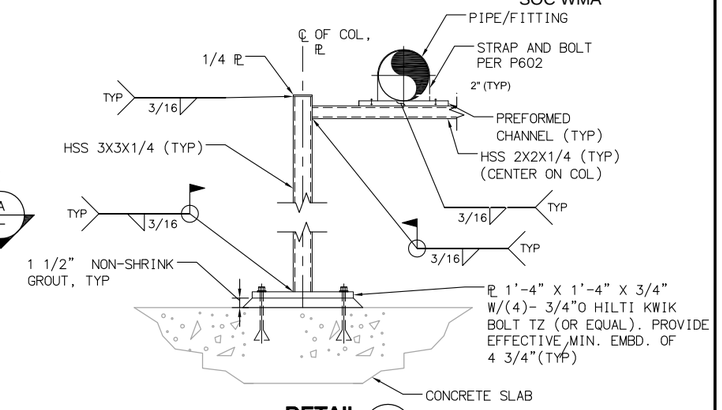

DETAIL 3 / M207
SCALE: 1/2"= 1'-0"

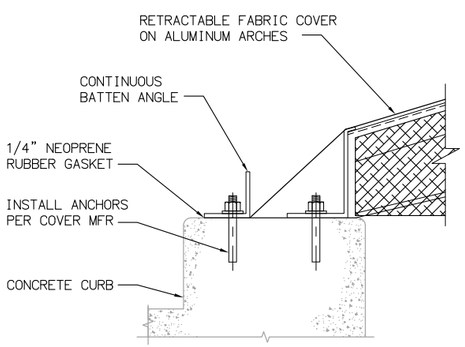

DETAIL 5 / M207
SCALE: 1/2" = 1'-0"

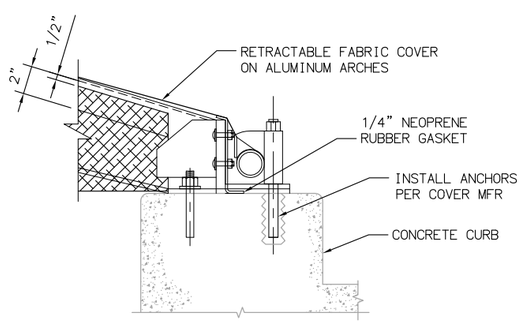

DETAIL 6 / M207
SCALE: 1/2"= 1'-0"

No.	DATE	REVISIONS	APPROVED

DESIGNED: DAH
DRAWN: RCM
CHECKED: TSD

RBF CONSULTING

carollo

IRVINE RANCH WATER DISTRICT

JIM MEYERHOFER	RCE NO. 48451	PROJECT MANAGER	DATE
CINDY MILLER	RCE NO. 58116	PROJECT MANAGER	DATE
PATRICIA UEMATSU	RCE NO. 36762	PRINCIPAL ENGINEER	DATE

IRVINE RANCH WATER DISTRICT
BAKER WATER TREATMENT PLANT
PROJECT NO. 11218

FOREBAY, MF PUMP STATION, STRAINERS, AND MFWW CLARIFIER DETAILS

DRAWING
M212
SHEET
324 OF 632

FILENAME:8127A10-6232-M212.dwg
LAST UPDATED: 01/05/2012 10:00 AM
LAST SAVED BY: trea

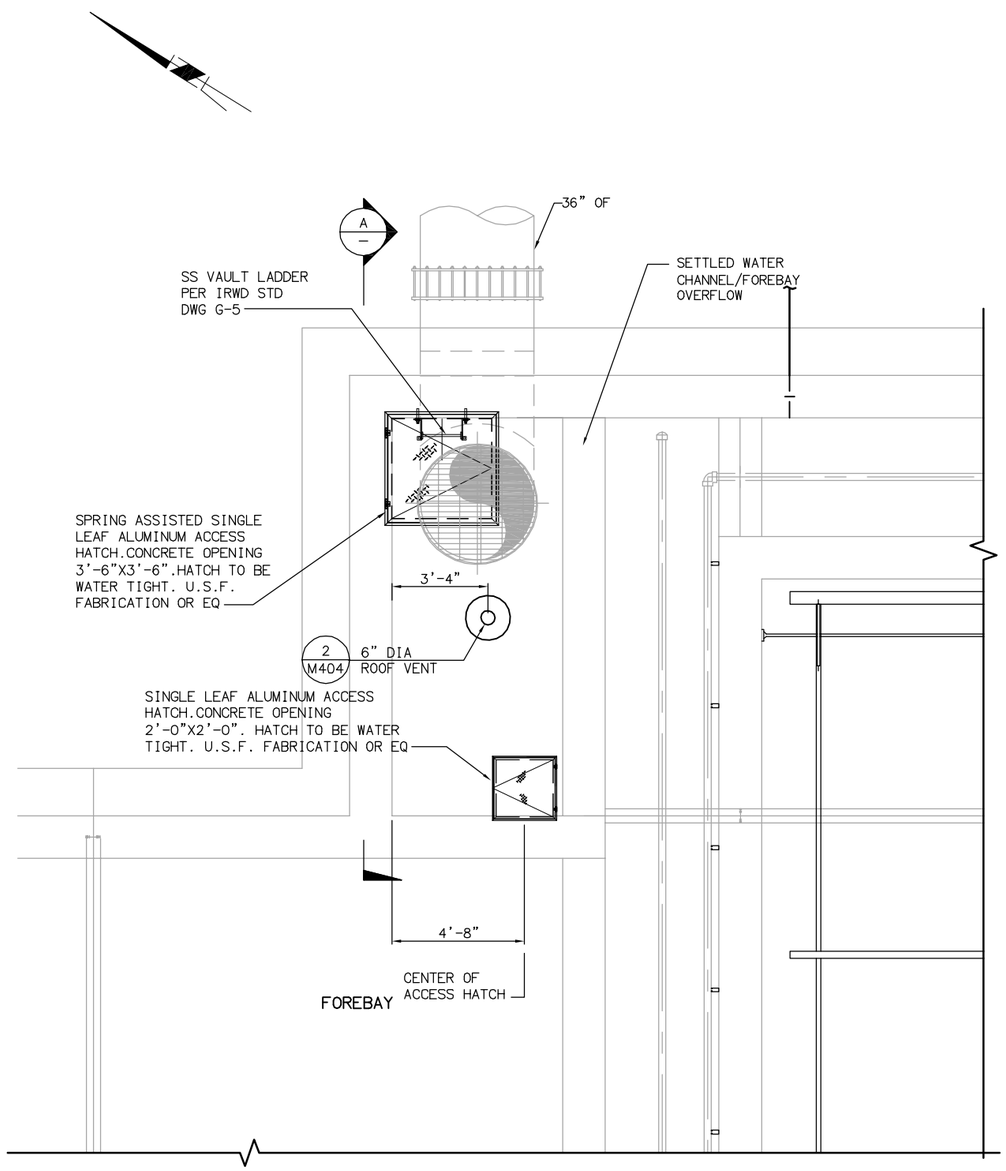

PLAN
SCALE: 3/8" = 1'-0"

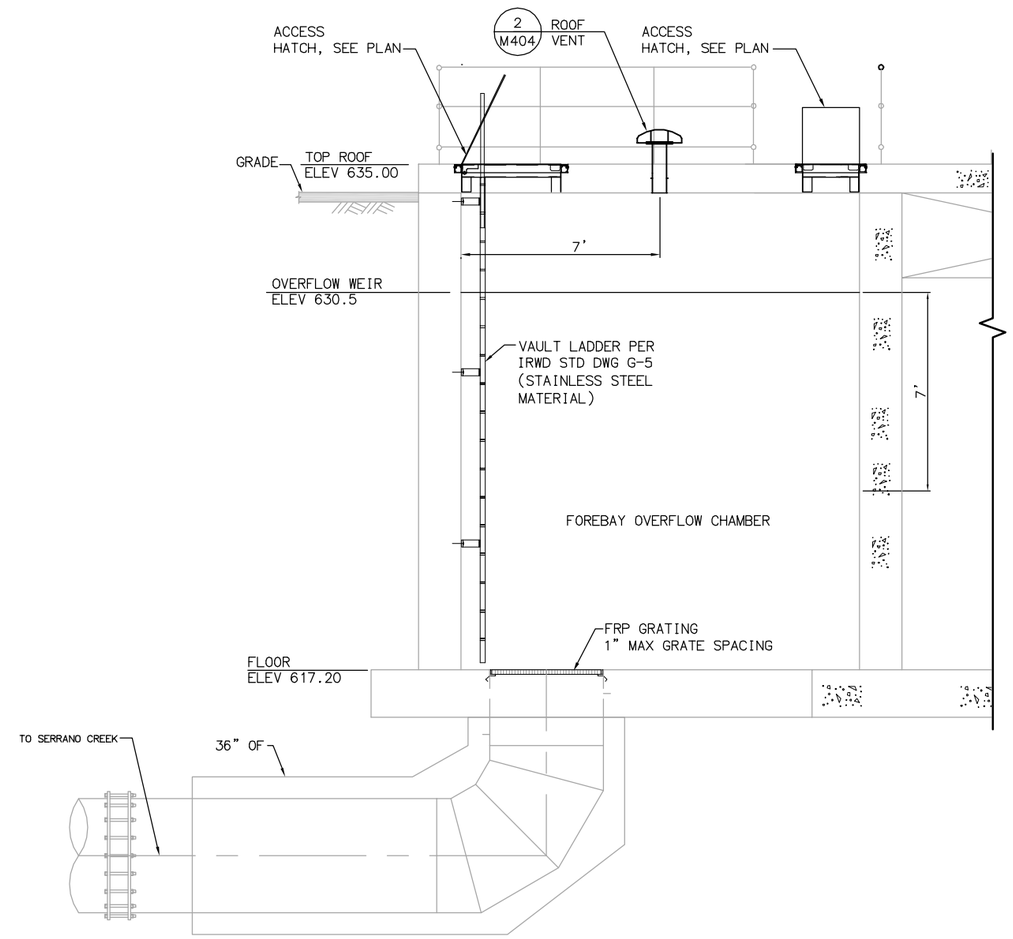

SECTION A
SCALE: 3/8" = 1'-0"

EQUIPMENT TAG NUMBERS ON THIS DRAWING ARE PRECEDED W/ **02-MFW-** UNLESS OTHERWISE LABELED

No.	DATE	REVISIONS	APPROVED

DESIGNED: ARP
DRAWN: DDT
CHECKED: CLM

RBF CONSULTING

carollo

IRVINE RANCH WATER DISTRICT

CINDY L. MILLER	RCE NO. 58116	PROJECT ENGINEER	DATE
CINDY MILLER	RCE NO. 58116	PROJECT MANAGER	DATE
PATRICIA UEMATSU	RCE NO. 36762	PRINCIPAL ENGINEER	DATE

IRVINE RANCH WATER DISTRICT
BAKER WATER TREATMENT PLANT
PROJECT NO. 11218

FOREBAY AND MF PUMP STATION DECHLORINATION PASSIVE SYSTEM

DRAWING **M213**
SHEET **325** OF **632**

LAST SAVED BY: dtrujillo LAST UPDATED: 01/18/2012 03:19 PM FILENAME: 6232-M213.dwg

NOTES

1. REFER TO M001 – MECHANICAL NOTES FOR ADDITIONAL INFORMATION AND REQUIREMENTS.
2. WHERE NO CONSTRUCTION DETAILS ARE SHOWN OR NOTED FOR ANY PART OF THE WORK, DETAILS SHALL BE THE SAME AS FOR OTHER SIMILAR WORK.
3. FOR CONTINUATION OF PIPING OUTSIDE OF STRUCTURES, SEE CIVIL DRAWINGS.

KEY NOTES

1. RESTRICTED EXPANSION JOINT. TYPICAL OF ALL PROCESS PIPING CROSSING BUILDING EXPANSION JOINTS.
2. TO MEMBRANE RACK NUMBER 1.
3. TO MEMBRANE RACK NUMBER 8.
4. TO MEMBRANE RACK NUMBER 9.
5. TO MEMBRANE RACK NUMBER 14.
6. SEE PLUMBING DRAWINGS FOR FLOOR DRAIN AND SUMP LOCATIONS AND PIPING.
7. ROUTE TO INSTRUMENT PANEL IN LAB.
8. 2" SS NPT CONNECTION.
9. SEE SECTION B/M314 FOR CONTINUATION OF BACKWASH PIPINGTO/FROMBACKWASH PUMPS.
10. EQUIPMENT TAG NUMBERS IN THIS AREA ARE PRECEDED W/06-MFWW.
11. SEE INSTRUMENTATION DRAWINGS FOR INSTALLATION DETAILS.
12. UV TRANSMITTANCE SENSOR SAMPLE PANEL. SEE I023 FOR PANEL DETAILS.
13. PROVIDE 2" NPT SAMPLE TAP.
14. PROVIDE RESTRAINED FLEXIBLE CONNECTION AT WALL PENETRATION. FLEXIBLE CONNECTION SHALL BE MADE USING VICTAULIC DEPEND-O-LOK F X F MODIFIED COUPLINGS (OR EQUAL). PROVIDE SECOND COUPLING AT A MINIMUM DISTANCE REQUIRED BY COUPLING MANUFACTURER TO FACILITATE A MAXIMUM DIFFERENTIAL SETTLEMENT OF 1-INCH BETWEEN PIPE AND BUILDING. REFER TO SECTION 15162 FOR COUPLING REQUIREMENTS.

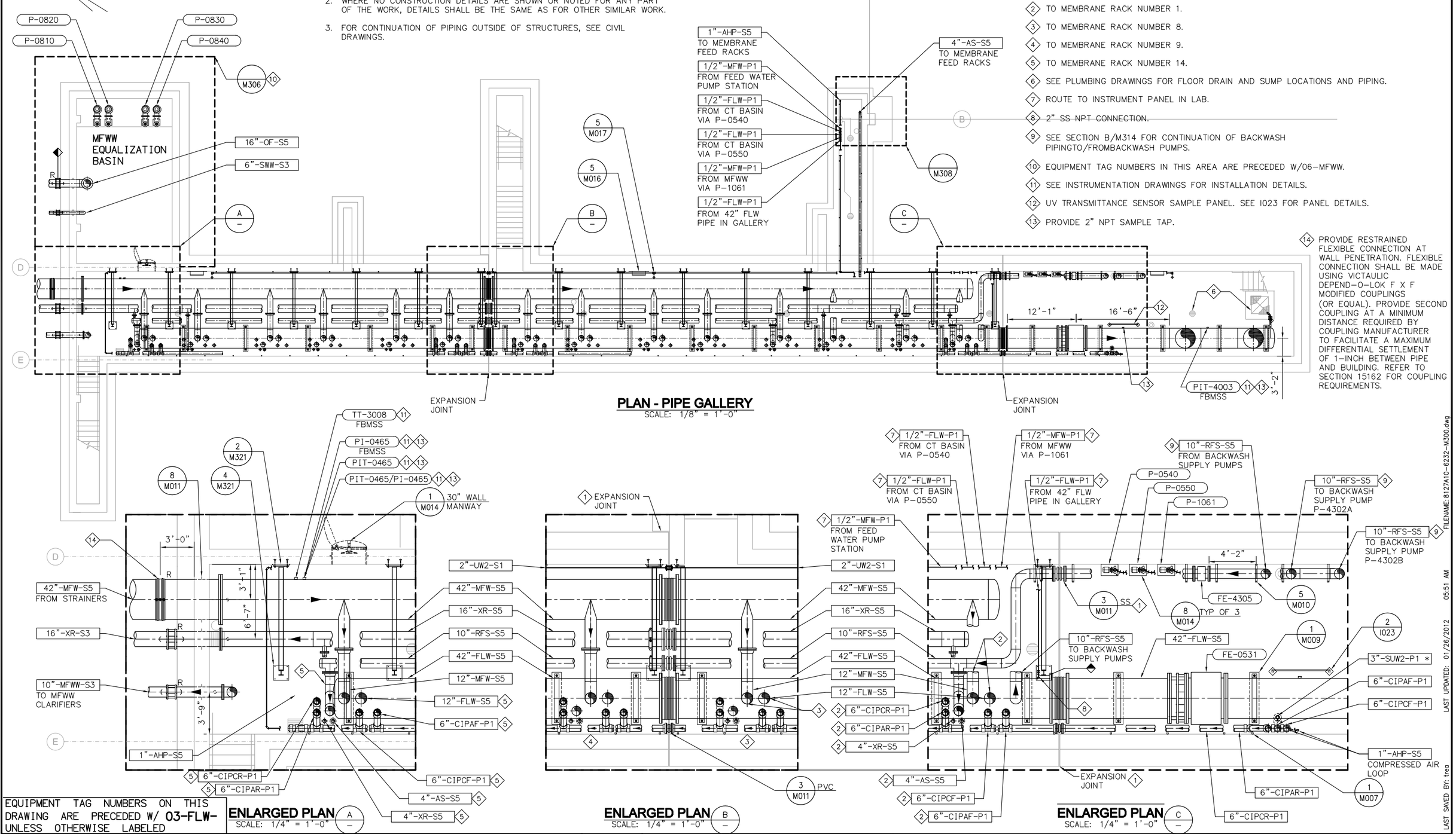

PLAN - PIPE GALLERY
SCALE: 1/8" = 1'-0"

ENLARGED PLAN A
SCALE: 1/4" = 1'-0"

ENLARGED PLAN B
SCALE: 1/4" = 1'-0"

ENLARGED PLAN C
SCALE: 1/4" = 1'-0"

EQUIPMENT TAG NUMBERS ON THIS DRAWING ARE PRECEDED W/ 03-FLW- UNLESS OTHERWISE LABELED

No.	DATE	REVISIONS	APPROVED

DESIGNED: DAH
DRAWN: RCM
CHECKED: TSD

RBF CONSULTING
carollo
IRVINE RANCH WATER DISTRICT

JIM MEYERHOFER	RCE NO. 48451	PROJECT MANAGER	DATE
CINDY MILLER	RCE NO. 58116	PROJECT MANAGER	DATE
PATRICIA UEMATSU	RCE NO. 36762	PRINCIPAL ENGINEER	DATE

IRVINE RANCH WATER DISTRICT
BAKER WATER TREATMENT PLANT
PROJECT NO. 11218

TREATMENT BUILDING
LOWER LEVEL PIPE GALLERY PLAN

DRAWING M300
SHEET 326 OF 632

FILENAME: 8127A10-6232-M300.dwg
LAST UPDATED: 01/26/2012 05:51 AM
LAST SAVED BY: trea

NOTES

1. HORIZONTAL SPACING ON PIPES BETWEEN PIPE MANIFOLD TAKE OFFS AND MEMBRANE RACKS SHALL BE CONFIRMED BY THE CONTRACTOR AND MEMBRANE SUPPLIER PRIOR TO DELIVERY OF STAINLESS STEEL PIPING TO THE PROJECT SITE.

INSTRUMENT TAG	NOTE
04-FLW-AE/AIT-0541	
04-FLW-AE/AIT-0542	
04-FLW-AE/AIT-0551	
06-MFWW-AE/AIT-1061	
06-MFWW-AE/AIT-3006	FURNISHED BY PALL
06-MFWW-AE/AIT-4001	FURNISHED BY PALL

KEY NOTES

1. RESTRICTED EXPANSION JOINT. TYPICAL OF ALL PROCESS PIPING CROSSING BUILDING EXPANSION JOINTS.
2. SEE PLUMBING DRAWINGS FOR FLOOR DRAINS, SUMPS AND PIPING LOCATIONS.
2. LOCATE THE FOLLOWING INSTRUMENTS ABOVE LABORATORY COUNTER AS SHOWN ON 1022.

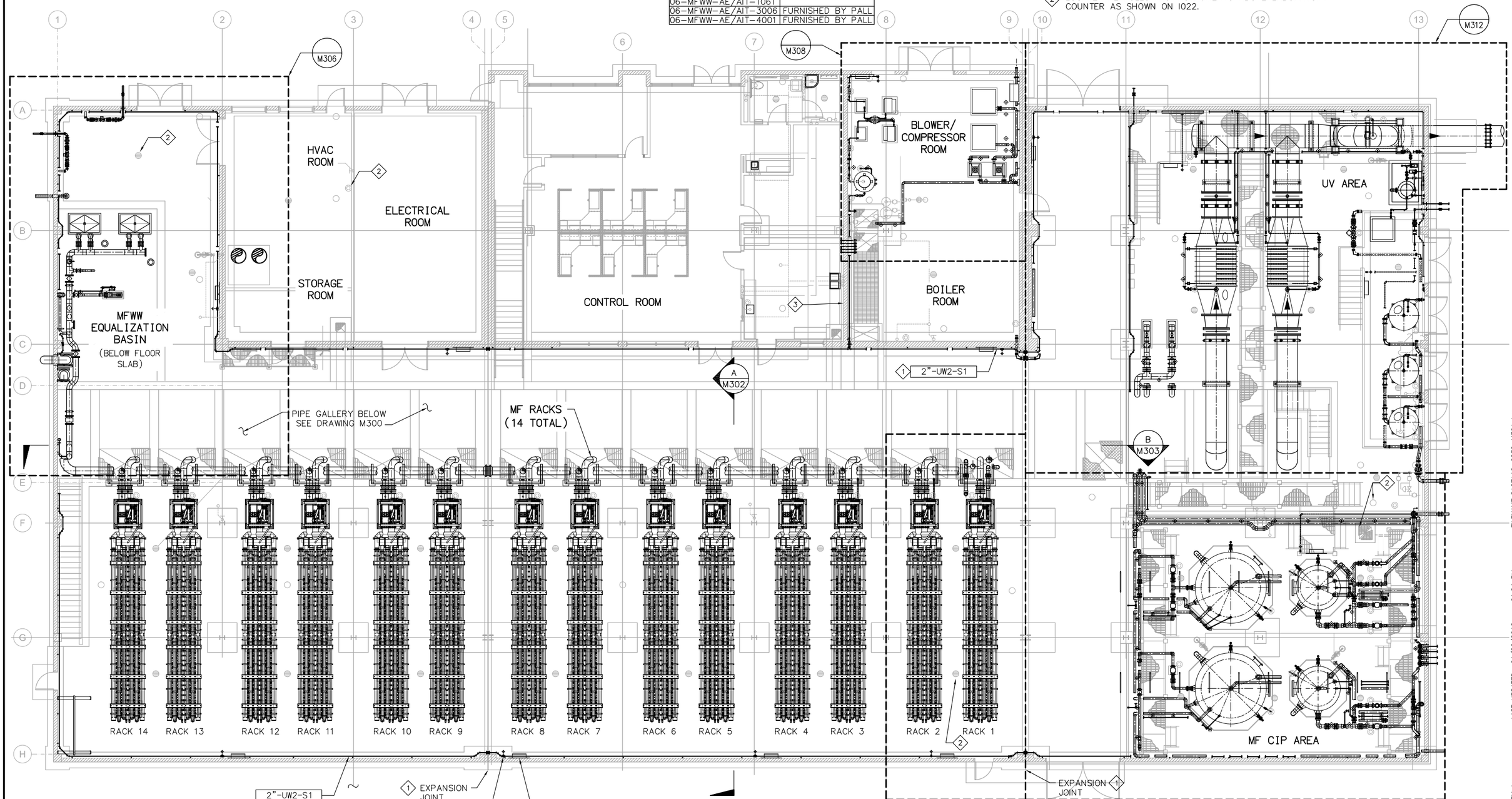

NOT ALL EQUIPMENT TAG NUMBERS ON THIS SHEET ARE PRECEED BY COMMON DESIGNATIONS, REFER TO PIDS

PLAN - TREATMENT BUILDING

SCALE: 1/8" = 1'-0"

No.	DATE	REVISIONS	APPROVED

DESIGNED: DAH
DRAWN: RCM
CHECKED: TSD

RBF CONSULTING

carollo

IRVINE RANCH WATER DISTRICT

JIM MEYERHOFER	RCE NO. 48451	PROJECT MANAGER	DATE
CINDY MILLER	RCE NO. 58116	PROJECT MANAGER	DATE
PATRICIA UEMATSU	RCE NO. 36762	PRINCIPAL ENGINEER	DATE

IRVINE RANCH WATER DISTRICT
BAKER WATER TREATMENT PLANT
PROJECT NO. 11218

TREATMENT BUILDING UPPER LEVEL KEY PLAN

DRAWING M301

SHEET 327 OF 632

FILENAME: 81127A10-6232-M301.dwg
LAST UPDATED: 01/26/2012 01:24 PM
LAST SAVED BY: treg

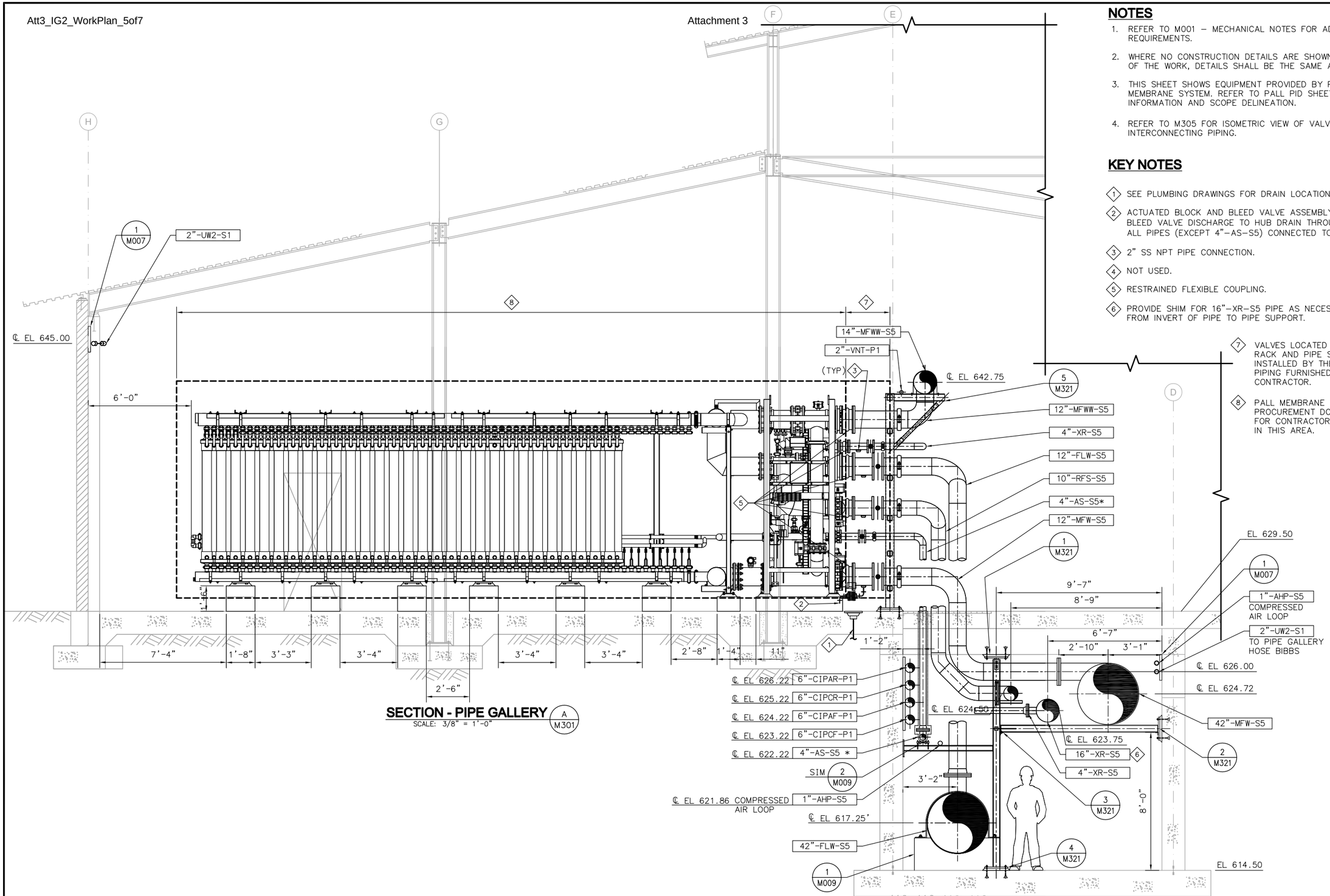

SECTION - PIPE GALLERY (A / M301)

SCALE: 3/8" = 1'-0"

NOTES

1. REFER TO M001 – MECHANICAL NOTES FOR ADDITIONAL INFORMATION AND REQUIREMENTS.
2. WHERE NO CONSTRUCTION DETAILS ARE SHOWN OR NOTED FOR ANY PART OF THE WORK, DETAILS SHALL BE THE SAME AS FOR OTHER SIMILAR WORK.
3. THIS SHEET SHOWS EQUIPMENT PROVIDED BY PALL INTEGRAL TO THE MEMBRANE SYSTEM. REFER TO PALL PID SHEET 3 OF 10 FOR ADDITIONAL INFORMATION AND SCOPE DELINEATION.
4. REFER TO M305 FOR ISOMETRIC VIEW OF VALVE RACK AND ASSOCIATED INTERCONNECTING PIPING.

KEY NOTES

1. SEE PLUMBING DRAWINGS FOR DRAIN LOCATION AND PIPING.
2. ACTUATED BLOCK AND BLEED VALVE ASSEMBLY, SEE PALL P&IDS. ROUTE BLEED VALVE DISCHARGE TO HUB DRAIN THROUGH 6" AIR GAP. TYPICAL FOR ALL PIPES (EXCEPT 4"–AS–S5) CONNECTED TO MEMBRANE SKID.
3. 2" SS NPT PIPE CONNECTION.
4. NOT USED.
5. RESTRAINED FLEXIBLE COUPLING.
6. PROVIDE SHIM FOR 16"–XR–S5 PIPE AS NECESSARY TO MAKE UP DISTANCE FROM INVERT OF PIPE TO PIPE SUPPORT.
7. VALVES LOCATED BETWEEN PALL SUPPLIED VALVE RACK AND PIPE SUPPORT SUPPLIED BY PALL, INSTALLED BY THE CONTRACTOR. INTERCONNECTING PIPING FURNISHED AND INSTALLED BY THE CONTRACTOR.
8. PALL MEMBRANE RACK. REFER TO MEMBRANE PROCUREMENT DOCUMENTS AND PALL SUBMITTALS FOR CONTRACTOR INSTALLATION RESPONSIBILITIES IN THIS AREA.

FILENAME: 8127A10–6232–M302.dwg
LAST UPDATED: 01/25/2012 02:32 PM
LAST SAVED BY: treo

No.	DATE	REVISIONS	APPROVED

DESIGNED: DAH
DRAWN: RCM
CHECKED: TSD

RBF CONSULTING

carollo

IRVINE RANCH WATER DISTRICT

JIM MEYERHOFER	RCE NO. 48451	PROJECT MANAGER	DATE
CINDY MILLER	RCE NO. 58116	PROJECT MANAGER	DATE
PATRICIA UEMATSU	RCE NO. 36762	PRINCIPAL ENGINEER	DATE

IRVINE RANCH WATER DISTRICT
BAKER WATER TREATMENT PLANT
PROJECT NO. 11218

TREATMENT BUILDING
MF RACKS AND PIPE GALLERY
SECTION

DRAWING **M302**

SHEET **328** OF **632**

NOTES

1. REFER TO M001 – MECHANICAL NOTES FOR ADDITIONAL INFORMATION AND REQUIREMENTS.
2. WHERE NO CONSTRUCTION DETAILS ARE SHOWN OR NOTED FOR ANY PART OF THE WORK, DETAILS SHALL BE THE SAME AS FOR OTHER SIMILAR WORK.
3. FOR CONTINUATION OF PIPING OUTSIDE OF STRUCTURES, SEE CIVIL DRAWINGS.
4. THIS SHEET SHOWS EQUIPMENT PROVIDED BY PALL INTEGRAL TO THE MEMBRANE SYSTEM. REFER TO BOTH PROJECT AND PALL DRAWINGS (VOLUME 4) FOR PROCESS AND INSTRUMENTATION DRAWINGS FOR THIS AREA.
5. HORIZONTAL SPACING ON PIPES BETWEEN PIPE MANIFOLD TAKE OFFS AND MEMBRANE RACKS SHALL BE CONFIRMED BY THE CONTRACTOR AND MEMBRANE SUPPLIER PRIOR TO DELIVERY OF STAINLESS STEEL PIPING TO THE PROJECT SITE.

KEY NOTES

1. RESTRICTED EXPANSION JOINT. TYPICAL OF ALL PROCESS PIPING CROSSING BUILDING EXPANSION JOINTS.
2. NOT USED.
3. ROUTE TO SAMPLE SINK IN LAB.
4. SEE PLUMBING DRAWINGS FOR DRAIN LOCATION AND PIPING.
5. ACTUATED BLOCK AND BLEED VALVE ASSEMBLY, SEE PALL P&IDS. ROUTE BLEED VALVE DISCHARGE TO HUB DRAIN THROUGH 6" AIR GAP. TYPICAL FOR ALL PIPES (EXCEPT 4"-AS-S5) CONNECTED TO MEMBRANE SKID.
6. 2" SS NPT PIPE CONNECTION.
7. COVER VENT END WITH 316 SS SCREEN SECURED IN PLACE WITH BOLTED RETAINER RING.
8. ROUTE DRAIN PIPING TO NEAREST FLOOR DRAIN, MAINTAIN 6" AIR GAP.
9. PROVIDE 2" BALL VALVES ON DRAIN LINES, MATCH PIPE MATERIAL.

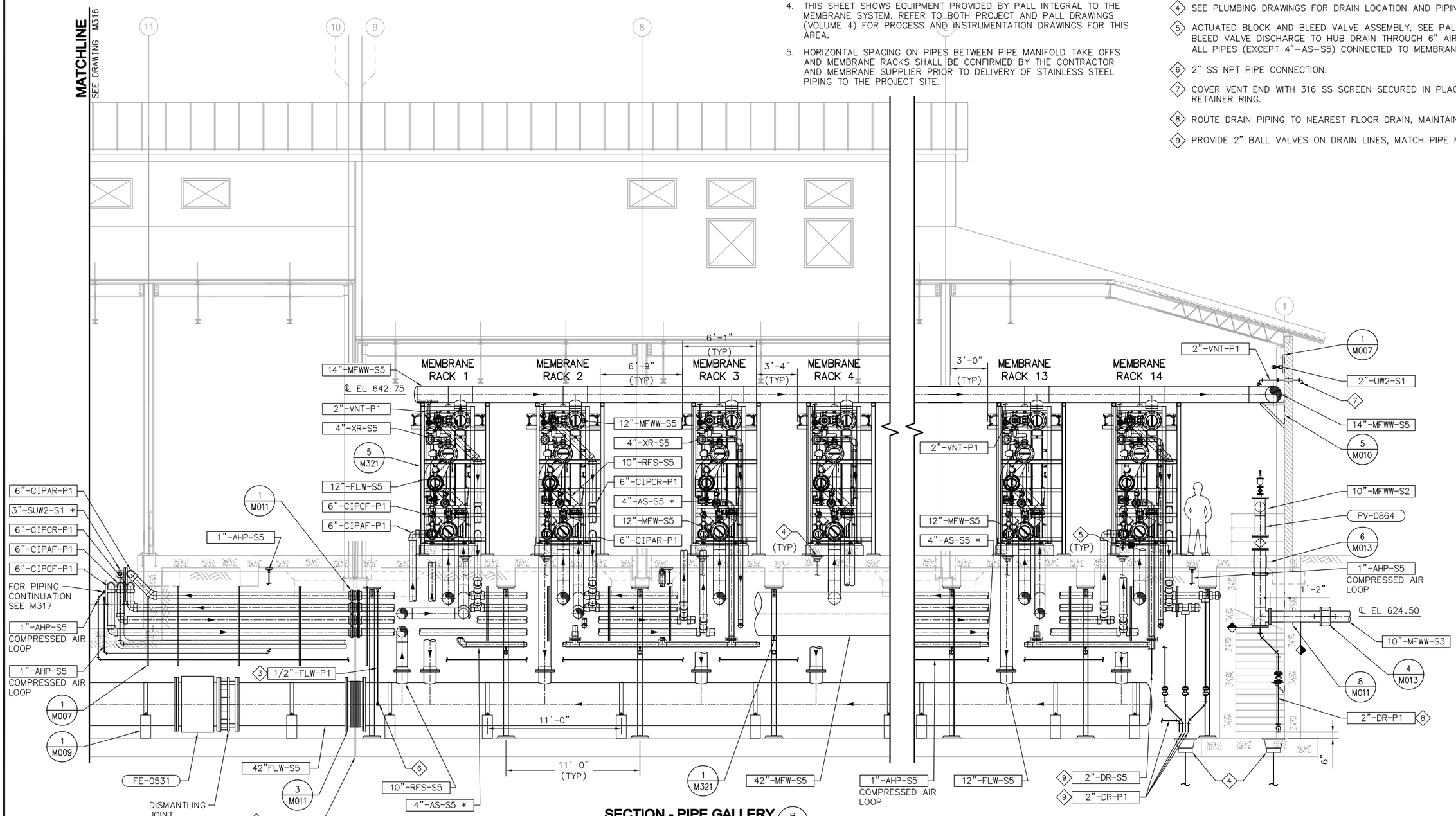

SECTION - PIPE GALLERY (B / M301)

SCALE: 1/4" = 1'-0"

FILENAME: 8127A10-6232-M303.dwg

LAST UPDATED: 01/26/2012 05:54 AM

LAST SAVED BY: treg

No.	DATE	REVISIONS	APPROVED

DESIGNED: DAH
DRAWN: RCM
CHECKED: TSD

RBF CONSULTING

carollo

IRVINE RANCH WATER DISTRICT

JIM MEYERHOFER	RCE NO. 48451	PROJECT MANAGER	DATE
CINDY MILLER	RCE NO. 58116	PROJECT MANAGER	DATE
PATRICIA UEMATSU	RCE NO. 36762	PRINCIPAL ENGINEER	DATE

IRVINE RANCH WATER DISTRICT
BAKER WATER TREATMENT PLANT
PROJECT NO. 11218

TREATMENT BUILDING MF FEED RACKS SECTION

DRAWING **M303**

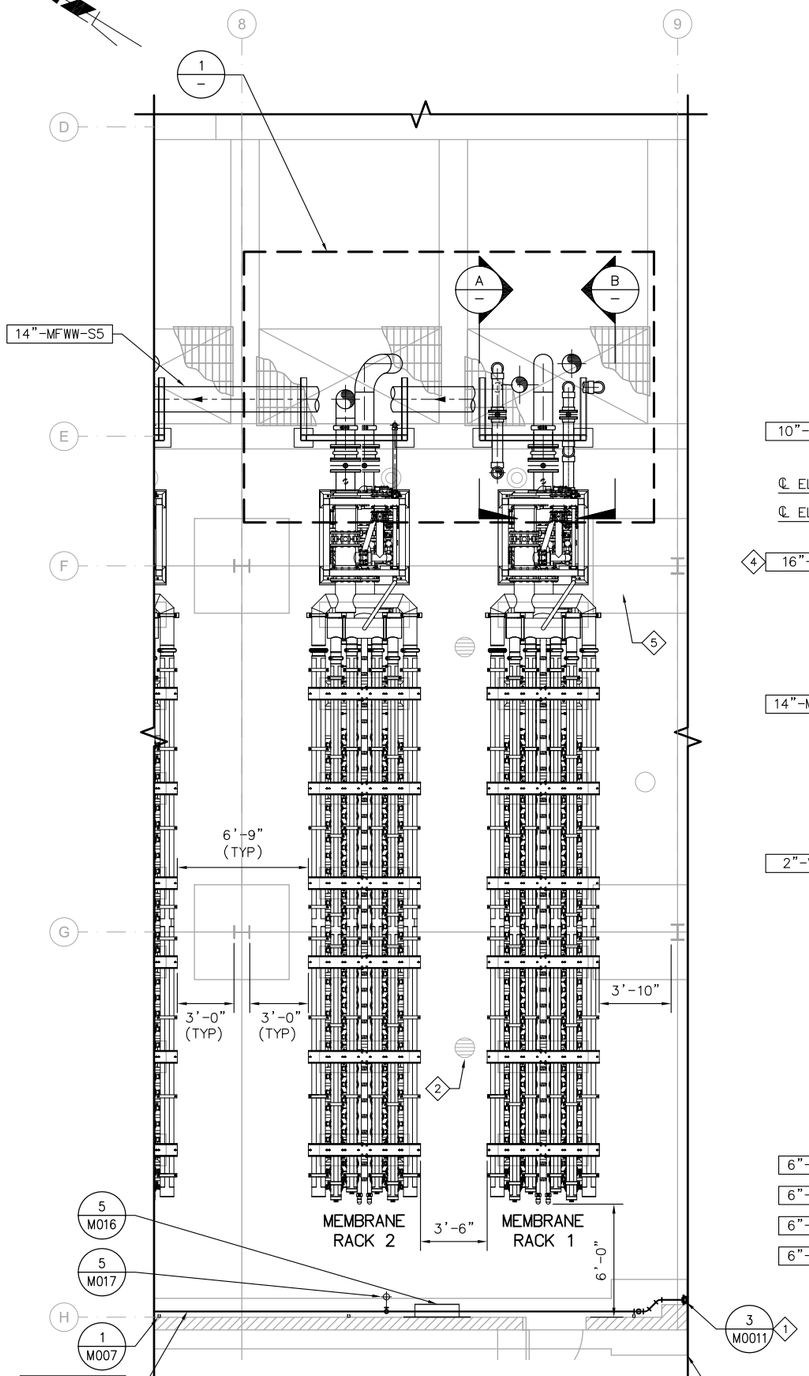

ENLARGED PLAN - MF FEED RACKS

SCALE: 1/4" = 1'-0"

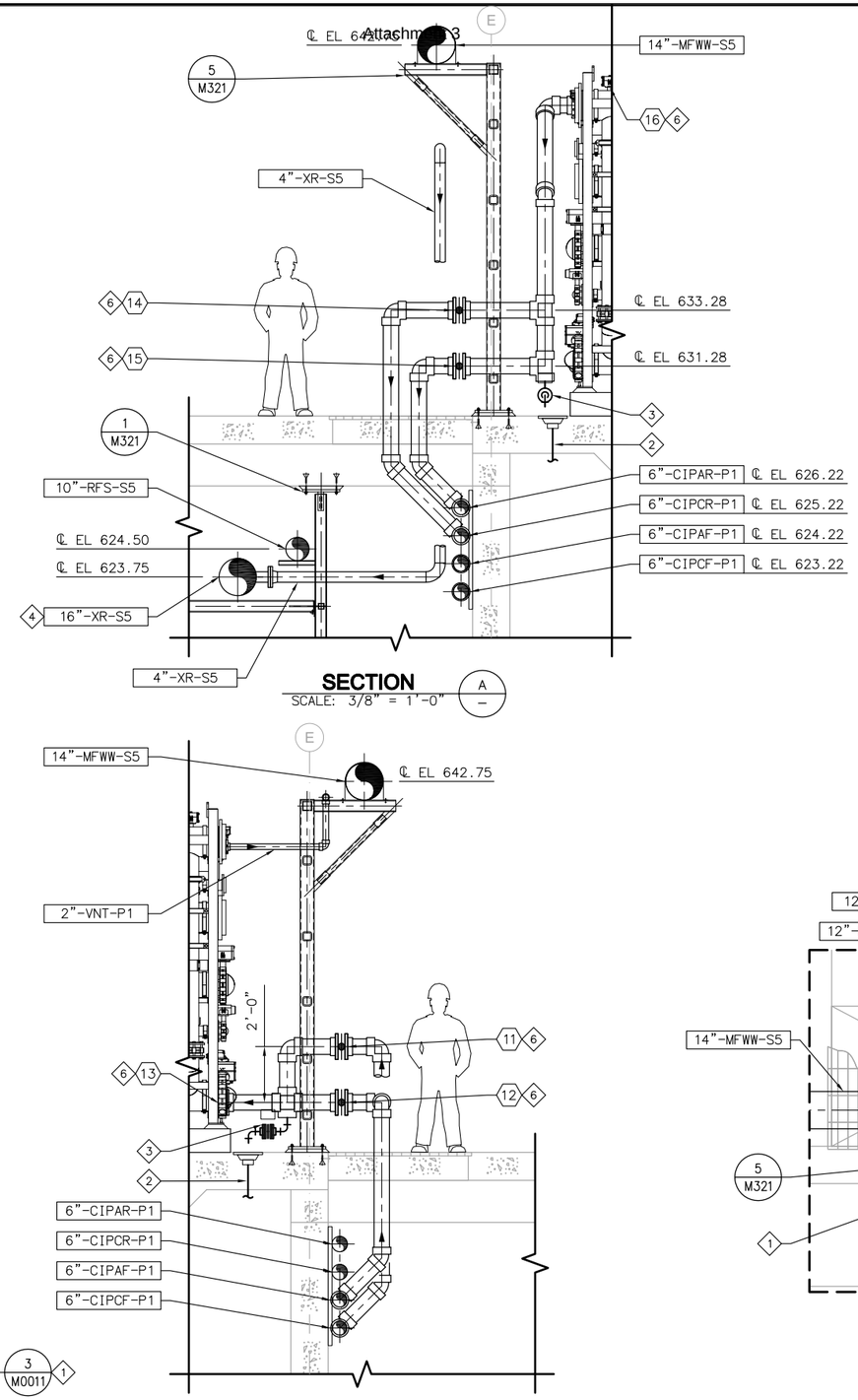

SECTION

SCALE: 3/8" = 1'-0" (A –)

SECTION

SCALE: 3/8" = 1'-0" (B –)

NOTES

SOC WMA

1. REFER TO M001 – MECHANICAL NOTES FOR ADDITIONAL INFORMATION AND REQUIREMENTS.
2. WHERE NO CONSTRUCTION DETAILS ARE SHOWN OR NOTED FOR ANY PART OF THE WORK, DETAILS SHALL BE THE SAME AS FOR OTHER SIMILAR WORK.
3. THIS SHEET SHOWS EQUIPMENT PROVIDED BY PALL INTEGRAL TO THE MEMBRANE SYSTEM. REFER TO BOTH PROJECT AND PALL DRAWINGS (VOLUME 4) FOR PROCESS AND INSTRUMENTATION DRAWINGS FOR THIS AREA. PALL TAGS USE ⬡ SYMBOL. KEY IS ON DRAWING M305.

KEY NOTES

1. RESTRAINED FLEXIBLE COUPLING.
2. SEE PLUMBING DRAWINGS FOR DRAIN LOCATION AND PIPING.
3. ACTUATED BLOCK AND BLEED VALVE ASSEMBLY, SEE PALL P&IDS. ROUTE BLEED VALVE DISCHARGE TO HUB DRAIN THROUGH 6" AIR GAP. TYPICAL FOR ALL PIPES (EXCEPT 4"-AS-S5) CONNECTED TO MEMBRANE SKID.
4. PROVIDE SHIM FOR 16"-XR-S5 PIPE AS NECESSARY TO MAKE UP DISTANCE FROM INVERT OF PIPE TO PIPE SUPPORT.
5. GANTRY CRANE, 1000 POUND CAPACITY, 10' SPAN WIDTH X 5'-8" MAXIMUM CASTER FOOTPRINT X 15'-7" HIGH. WALLACE CRANE – MODEL THRIFTY OR EQUAL.
6. SEE MEMBRANE RACK VALVE IDENTIFICATION TABLE ON DRAWING M305.

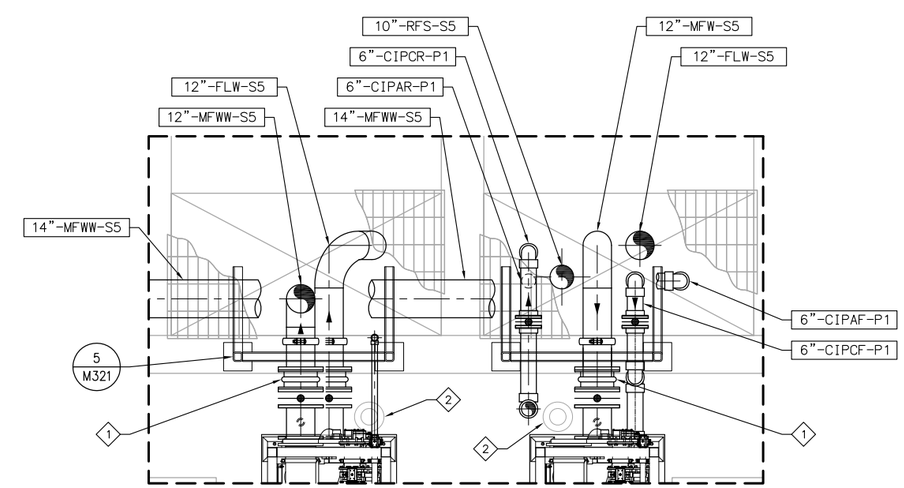

DETAIL

SCALE: 3/8" = 1'-0" (1 –)

FILENAME:81127A10-6232-M304.dwg

LAST UPDATED: 01/26/2012 06:00 AM

LAST SAVED BY: trea

No.	DATE	REVISIONS	APPROVED

DESIGNED: DAH
DRAWN: RCM
CHECKED: TSD

RBF CONSULTING

carollo

IRVINE RANCH WATER DISTRICT

JIM MEYERHOFER	RCE NO. 48451	PROJECT MANAGER	DATE
CINDY MILLER	RCE NO. 58116	PROJECT MANAGER	DATE
PATRICIA UEMATSU	RCE NO. 36762	PRINCIPAL ENGINEER	DATE

IRVINE RANCH WATER DISTRICT
BAKER WATER TREATMENT PLANT
PROJECT NO. 11218

TREATMENT BUILDING MF FEED RACK ENLARGED PLAN

DRAWING M304

SHEET 330 OF 632

NOTES

1. REFER TO M01 – MECHANICAL NOTES FOR ADDITIONAL INFORMATION AND REQUIREMENTS.
2. WHERE NO CONSTRUCTION DETAILS ARE SHOWN OR NOTED FOR ANY PART OF THE WORK, DETAILS SHALL BE THE SAME AS FOR OTHER SIMILAR WORK.
3. THIS SHEET SHOWS EQUIPMENT PROVIDED BY PALL INTEGRAL TO THE MEMBRANE SYSTEM. REFER TO BOTH PROJECT AND PALL DRAWINGS (VOLUME 4) FOR PROCESS AND INSTRUMENTATION DRAWINGS FOR THIS AREA.

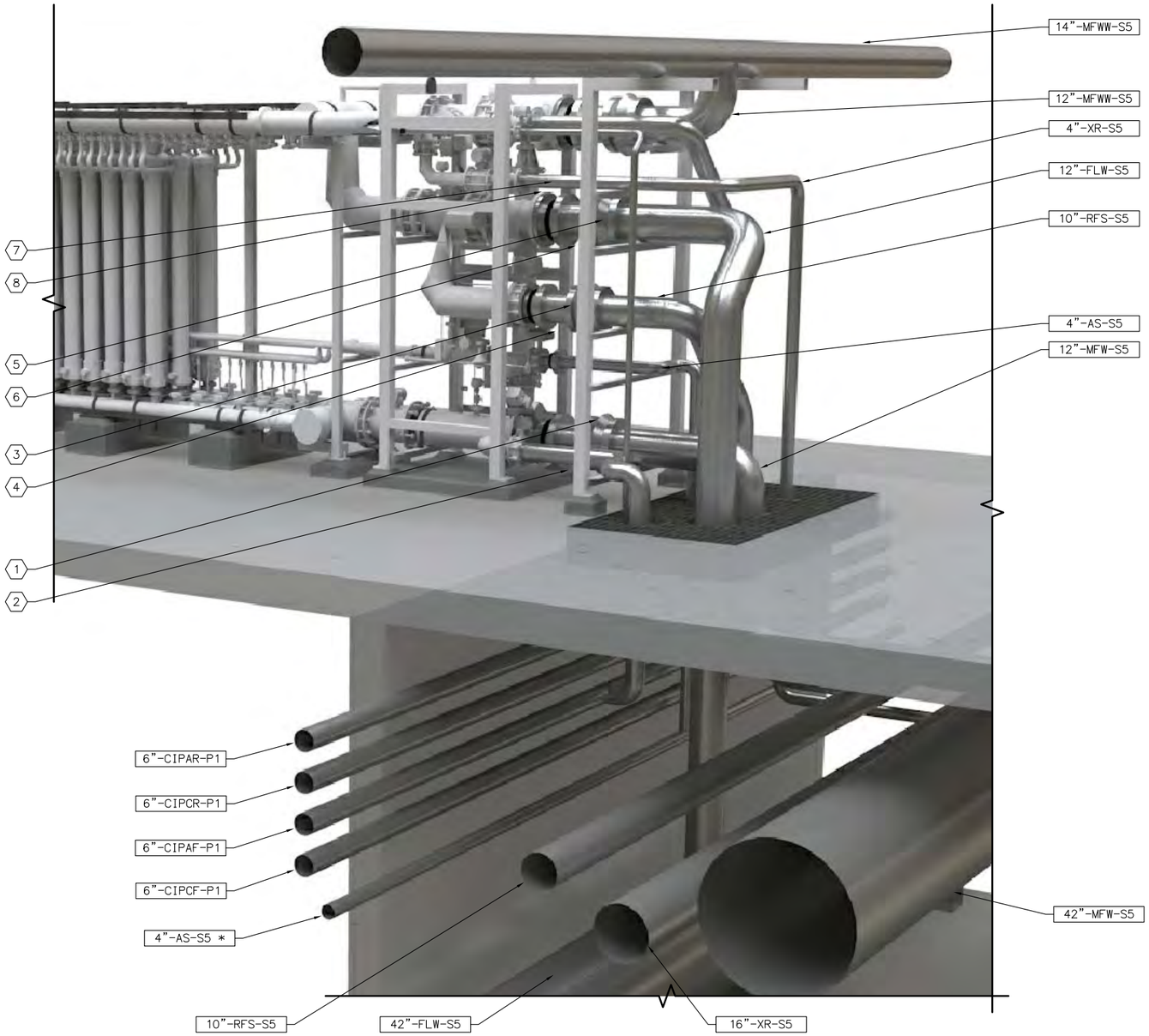

MEMBRANE RACK ISOMETRIC

SCALE: N.T.S

VALVE IDENTIFICATION TABLE

1	MEMBRANE FEED WATER BLOCK VALVE	V-1030
2	MEMBRANE FEED WATER BLEED VALVE	V-1031
3	REVERSE FLOW BLOCK VALVE	V-1038
4	REVERSE FLOW BLEED VALVE	V-1037
5	FILTERED WATER BLOCK VALVE	V-1025
6	FILTERED WATER BLEED VALVE	V-1024
7	EXCESS RECIRCULATION BLOCK VALVE	V-1028
8	EXCESS RECIRCULATION BLEED VALVE	V-1027
9	NOT USED	
10	NOT USED	
11	CIP CAUSTIC FEED BLOCK VALVE	V-1032
12	CIP ACID FEED BLOCK VALVE	V-1023
13	CIP FEED BLEED VALVE	V-1022
14	CIP CAUSTIC RETURN BLOCK VALVE	V-1033
15	CIP ACID RETURN BLOCK VALVE	V-1029
16	CIP RETURN BLEED VALVE	V-1014

FILENAME:8127A10-6232-M305.dwg

LAST UPDATED: 01/26/2012 06:00 AM

LAST SAVED BY: treo

No.	DATE	REVISIONS	APPROVED

DESIGNED: DAH
DRAWN: RCM
CHECKED: TSD

RBF CONSULTING

carollo

IRVINE RANCH WATER DISTRICT

JIM MEYERHOFER	RCE NO. 48451	PROJECT MANAGER	DATE
CINDY MILLER	RCE NO. 58116	PROJECT MANAGER	DATE
PATRICIA UEMATSU	RCE NO. 36762	PRINCIPAL ENGINEER	DATE

IRVINE RANCH WATER DISTRICT
BAKER WATER TREATMENT PLANT
PROJECT NO. 11218

TREATMENT BUILDING MF FEED RACK ISOMETRIC VIEW

DRAWING
M305
SHEET
331 OF 632

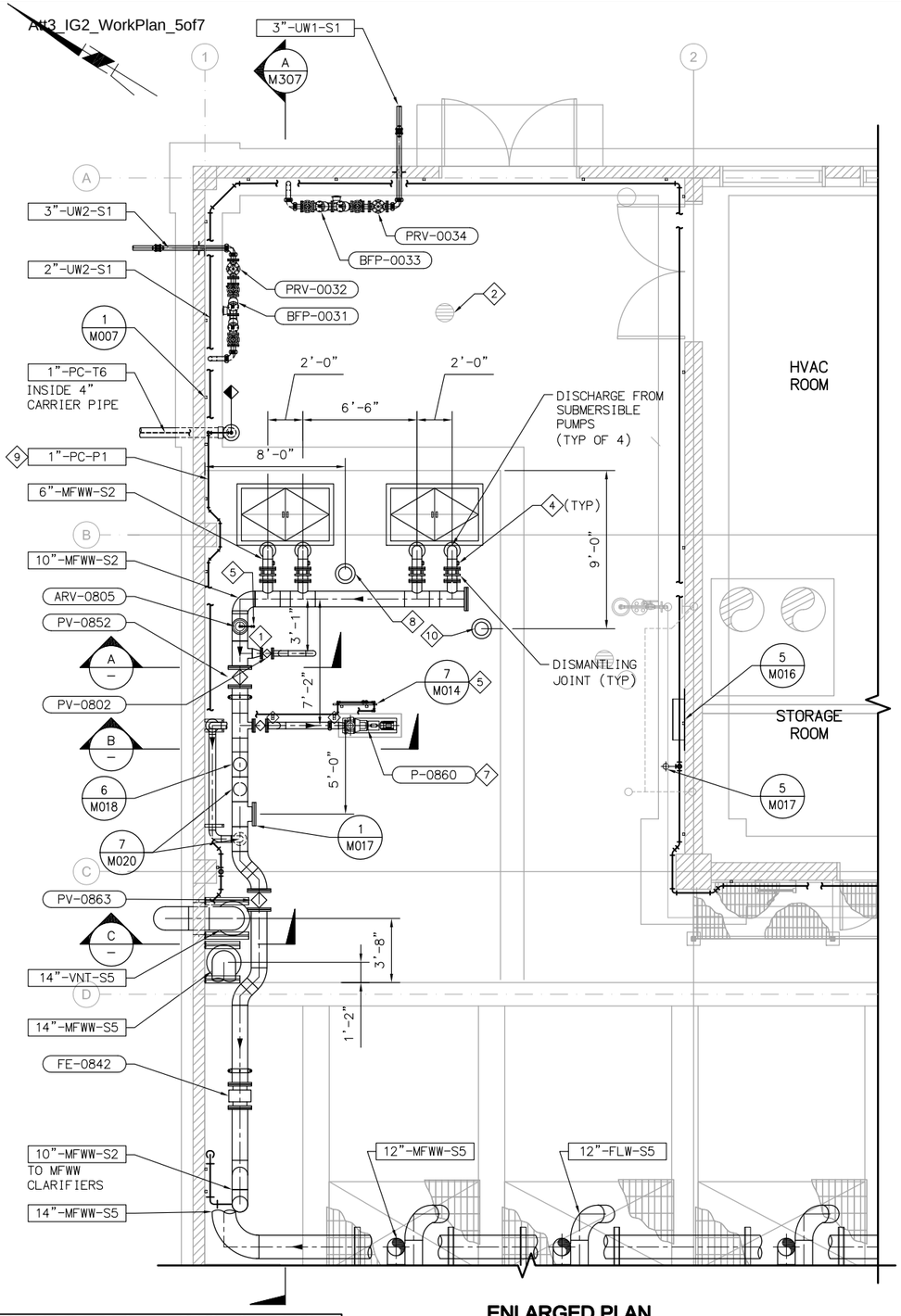

EQUIPMENT TAG NUMBERS ON THIS DRAWING ARE PRECEDED W/ 06-MFWW- UNLESS OTHERWISE LABELED

ENLARGED PLAN
SCALE: 1/4" = 1'-0"

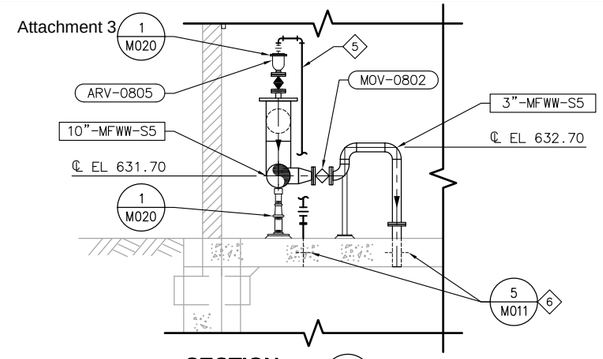

SECTION
SCALE: 3/8" = 1'-0" (A)

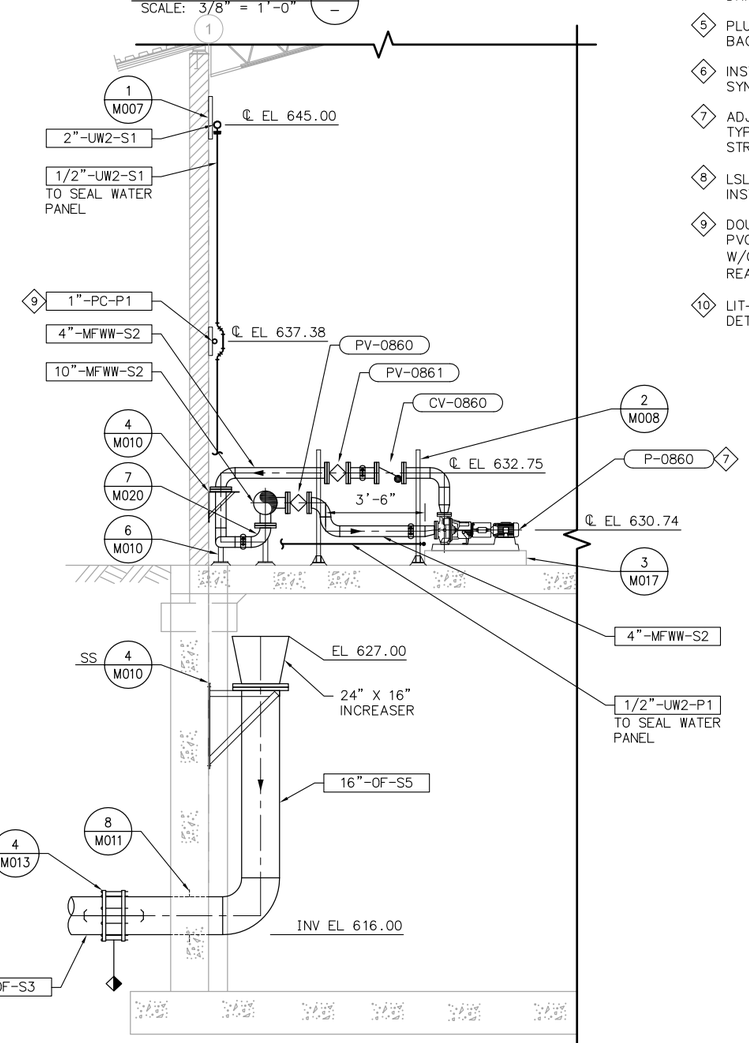

SECTION
SCALE: 3/8" = 1'-0" (B)

NOTES

1. REFER TO M001 – MECHANICAL NOTES FOR ADDITIONAL INFORMATION AND REQUIREMENTS.
2. WHERE NO CONSTRUCTION DETAILS ARE SHOWN OR NOTED FOR ANY PART OF THE WORK, DETAILS SHALL BE THE SAME AS FOR OTHER SIMILAR WORK.
3. FOR CONTINUATION OF PIPING OUTSIDE OF STRUCTURES, SEE CIVIL DRAWINGS.
4. SEE STRUCTURAL DRAWINGS FOR LOCATION OF ACCESS HATCHES.

KEY NOTES

1. PROVIDE 1" SAMPLE TAP (NPT)
2. SEE PLUMBING DRAWINGS FOR DRAIN LOCATION AND PIPING.
3. COVER VENT END WITH A 24–MESH, 316 SS SCREEN SECURED IN PLACE WITH BOLTED RETAINER RING.
4. 1 1/4" NPT CONNECTION FOR PRESSURE ELEMENT. SEE INSTRUMENTATION DRAWINGS FOR DETAILS AND MOUNTING POSITION.
5. PLUMB DISCHARGE OF AIR RELEASE VALVE AND PUMP SEAL WATER DISCHARGE BACK TO EQUALIZATION BASIN.
6. INSTALL LINK SEAL AT TOP OF FLOOR PENETRATION ONLY. CAULK WITH SYNTHETIC RUBBER SEALING COMPOUND AT FINISHED FLOOR.
7. ADJUST PUMP BASE DIMENSIONS BASED ON SELECTED PUMP. SEE STRUCTURAL TYPICAL DETAILS FOR REINFORCEMENT REQUIREMENTS. MAINTAIN LENGTH OF STRAIGHT PIPE AS INDICATED.
8. LSLL–0800 / LSH–0805. SEE ELECTRICAL/INSTRUMENTATION DRAWINGS FOR INSTALLATION DETAILS.
9. DOUBLE CONTAIN CHEMICAL PIPING. CONTAINMENT PIPE TO BE SCH 40, 4–INCH PVC, IPEX GUARDIAN SYSTEM, OR EQUAL. PROVIDE 1–INCH VALVED DRAIN W/CLEAR SIGHT GLASS ROUTED FROM LOW POINT OF CONTAINMENT PIPING TO READILY ACCESSIBLE LOCATION 3'–0" AFF.
10. LIT–0801. SEE ELECTRICAL/INSTRUMENTATION DRAWINGS FOR INSTALLATION DETAILS.

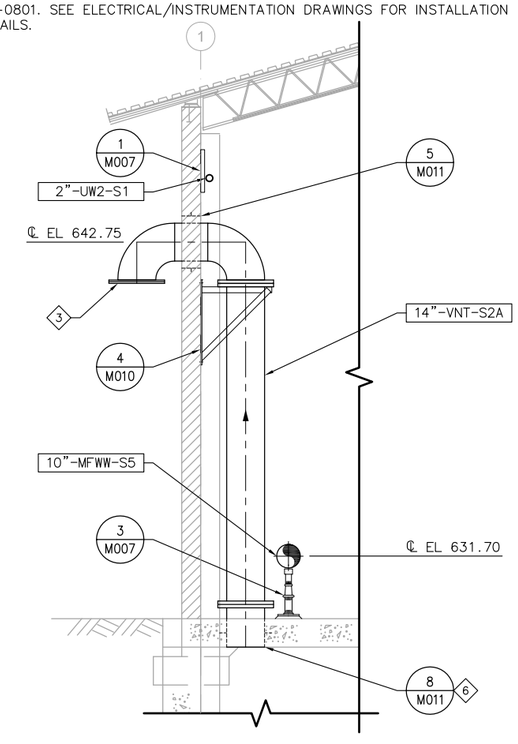

SECTION
SCALE: 3/8" = 1'-0" (C)

FILENAME: 8127A10-6232-M306.dwg
LAST UPDATED: 01/26/2012 07:43 AM
LAST SAVED BY: treq

No.	DATE	REVISIONS	APPROVED

DESIGNED: DAH
DRAWN: RCM
CHECKED: TSD

RBF CONSULTING
carollo
IRVINE RANCH WATER DISTRICT

JIM MEYERHOFER	RCE NO. 48451	PROJECT MANAGER	DATE
CINDY MILLER	RCE NO. 58116	PROJECT MANAGER	DATE
PATRICIA UEMATSU	RCE NO. 36762	PRINCIPAL ENGINEER	DATE

IRVINE RANCH WATER DISTRICT
BAKER WATER TREATMENT PLANT
PROJECT NO. 11218

TREATMENT BUILDING
MFWW EQUALIZATION BASIN
ENLARGED PLAN AND SECTION

DRAWING **M306**

NOTES

1. REFER TO M001 – MECHANICAL NOTES FOR ADDITIONAL INFORMATION AND REQUIREMENTS.
2. WHERE NO CONSTRUCTION DETAILS ARE SHOWN OR NOTED FOR ANY PART OF THE WORK, DETAILS SHALL BE THE SAME AS FOR OTHER SIMILAR WORK.
3. FOR CONTINUATION OF PIPING OUTSIDE OF STRUCTURES, SEE CIVIL DRAWINGS.

KEY NOTES

1. NOT USED.
2. 1 1/4" NPT CONNECTION FOR PRESSURE ELEMENT. SEE INSTRUMENTATION DRAWINGS FOR DETAILS AND MOUNTING POSITION.
   PLUMB DISCHARGE OF AIR RELEASE VALVE. TO MFWW EQUALIZATION BASIN.
3. INSTALL LINK SEAL AT TOP OF FLOOR PENETRATION ONLY. CAULK WITH SYNTHETIC RUBBER SEALING COMPOUND AT FINISHED FLOOR.
4. SEE PLUMBING DRAWINGS FOR DRAIN LOCATION AND PIPING.
5. ROUTE DRAIN PIPING TO NEAREST FLOOR DRAIN, MAINTAIN 6" AIR GAP.
6. LEVEL SENSOR MOUNT FOR MFWW EQUALIZATION BASIN. SEE ELECTRICAL/INSTRUMENTAION DRAWINGS FOR ADDITIONAL INFORMATION.
7.
8. PROVIDE 1" SAMPLE TAP FOR HV-3052 (FBMSS).
9. PROVIDE 1" SAMPLE TAP.

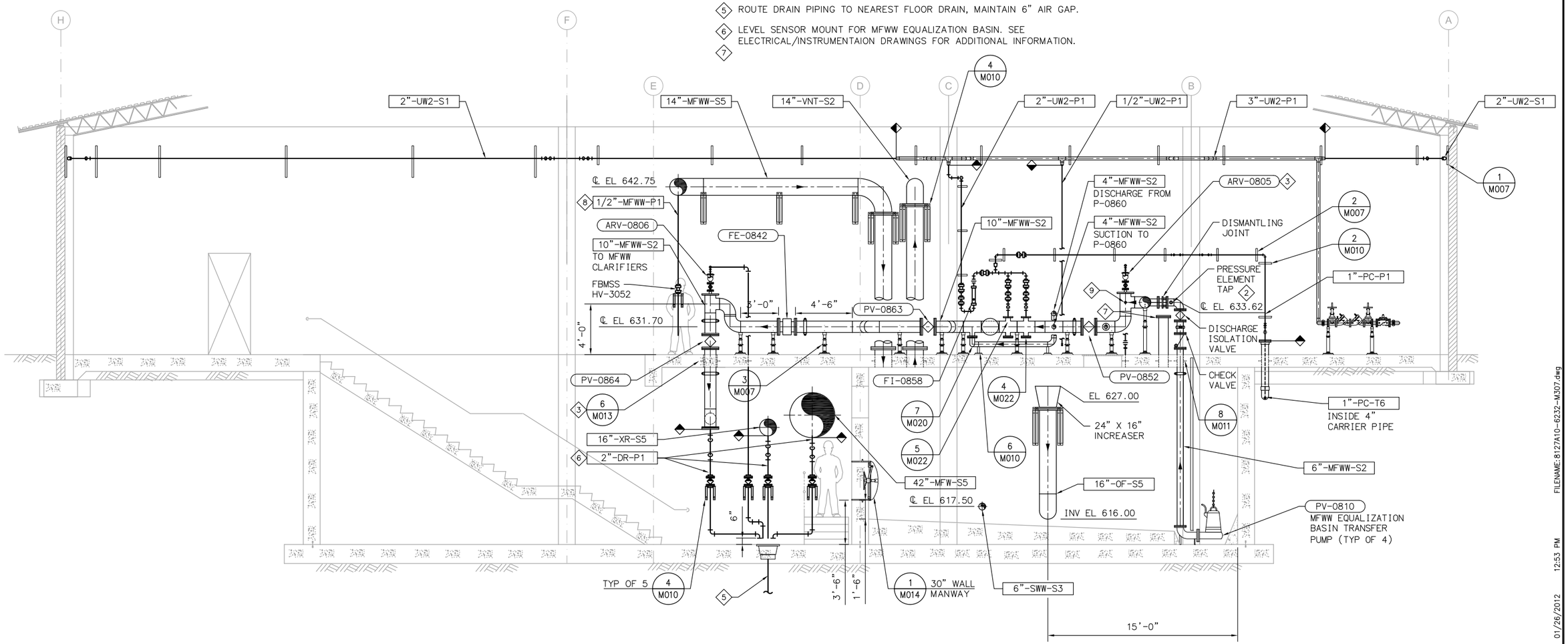

DESCRIPTION	PUMP	PRESSURE ELEMENT	CHECK VALVE	DISCHARGE ISOLATION VALVE
MFWW EQUALIZATION BASIN TRANSFER PUMP	P-0810	PE-0810	CV-0810	PV-0810
	P-0820	PE-0820	CV-0820	PV-0820
	P-0830	PE-0830	CV-0830	PV-0830
	P-0840	PE-0840	CV-0840	PV-0840

SECTION - BUILDING TRENCH (A / M306)
SCALE: 1/4" = 1'-0"

FILENAME: 8127A10-6232-M307.dwg
LAST UPDATED: 01/26/2012 12:53 PM
LAST SAVED BY: treg

No.	DATE	REVISIONS	APPROVED

DESIGNED: DAH
DRAWN: RCM
CHECKED: TSD

RBF CONSULTING
carollo
IRVINE RANCH WATER DISTRICT

JIM MEYERHOFER	RCE NO. 48451	PROJECT MANAGER	DATE
CINDY MILLER	RCE NO. 58116	PROJECT MANAGER	DATE
PATRICIA UEMATSU	RCE NO. 36762	PRINCIPAL ENGINEER	DATE

IRVINE RANCH WATER DISTRICT
BAKER WATER TREATMENT PLANT
PROJECT NO. 11218

TREATMENT BUILDING
MFWW EQUALIZATION BASIN SECTION

DRAWING
M307
SHEET
333 OF 632