9-9-05

CALIFORNIA REGIONAL WATER QUALITY CONTROL BOARD
CENTRAL COAST REGION
895 Aerovista, Suite 101
San Luis Obispo, California 93401-7906

WASTE DISCHARGE/RECYCLED WATER REQUIREMENTS

ORDER NO. R3-2005-0015
(Waste Discharger Identification No. 3 420103001)

For

CITY OF GUADALUPE WASTEWATER FACILITY
Santa Barbara County

The California Regional Water Quality Control Board, Central Coast Region (hereafter Board), finds that:

PURPOSE OF ORDER

1. The purpose of the Order is to reissue new Waste Discharge and Recycled Water Requirements for the City of Guadalupe (hereafter Discharger). The Discharger submitted a report of waste discharge on November 18, 2004, for reauthorization to continue discharging treated municipal wastewater from the Discharger's upgraded wastewater facilities serving the City of Guadalupe, in Santa Barbara County. The purpose of the Discharger's Wastewater Facilities is to collect, treat, reuse and dispose of domestic and municipal wastewater.

FACILITY OWNER AND LOCATION

2. The Discharger's Wastewater Treatment Plant is located on property owned by the Discharger at 5125 West Main Street, Guadalupe (Latitude N 3457.738, Longitude W 12035.451), as shown on Attachment A, included as part of this Order.

FACILITY/SITE DESCRIPTION

3. **Treatment -** The wastewater treatment system consists of grit removal and biological treatment using aerated ponds (Swanson Advanced Integrated Pond System). Solids are anaerobically digested in cells at the bottom of the ponds, and ultimately disposed of at an approved biosolids disposal site. Biosolids disposal is expected to be infrequent based upon need (up to ten or more years between disposal events). The treatment plant design capacity is 1.0 million gallons per day (MGD), current flows average approximately 0.5 MGD. A diagram of the treatment processes is shown on Attachment B, included as part of this Order.

4. **Disposal and Reuse -** Treated municipal wastewater is discharged to approximately 71 acres of spray fields (irrigated pastures) adjacent to the Santa Maria River. Effluent is stored in a 40 acre pond adjacent to the treatment facility prior to disposal and during wet weather, when spray field use is limited. Effluent storage pond and disposal areas are depicted on Attachment A of this Order.

5. **Geology, Soils and Ground Water** – The vicinity of the discharge is characterized by fairly level topography consisting of sandy soils overlying poor quality shallow ground water. Depth to ground water ranges from two to eight feet below ground surface. Based upon monitoring data provided by the Discharger, the underlying shallow ground water includes the following characteristics:

Total Dissolved Solids	1600 mg/l
Sodium	260 mg/l
Chloride	270 mg/l
Nitrate (as N)	0.2 mg/l

6. **Watershed and Surface Waters** - The Santa Maria River flows in a westerly direction between the treatment plant and effluent storage pond on the south bank and the disposal spray fields on the north bank.

BASIN PLAN

7. The Water Quality Control Plan, Central Coast Basin (Basin Plan), was adopted by the Board on and approved on September 8, 1994. The Basin Plan incorporates statewide plans and policies by reference and contains a strategy for protecting beneficial uses of surface and ground waters in the vicinity of the discharge.

8. **Surface Water Beneficial Uses** - Present and anticipated beneficial uses of the Santa Maria River include:

   a. Municipal,
   b. Agricultural,
   c. Industrial Service Supply,
   d. Ground Water Recharge,
   e. Water Contact Recreation,
   f. Non-contact Water Recreation,
   g. Wildlife Habitat,
   h. Cold Fresh Water Habitat,
   i. Warm Fresh Water Habitat,
   j. Migration of Aquatic Organisms,
   k. Rare, Threatened or Endangered Species,
   l. Fresh Water Replenishment, and
   m. Commercial and Sport Fishing .

9. **Ground Water Beneficial Uses** - Present and anticipated beneficial uses of ground water in the vicinity of Guadalupe include:

   a. Municipal,
   b. Domestic,
   c. Agricultural and
   d. Industrial supply.

10. **Recycled Water** – Title 22, Division 4, Chapter 3 of the California Code of Regulations specifies State Department of Health Services' criteria for use of recycled water. Water Code section 13523 authorizes the Regional Board to issue reclamation requirements for water that is proposed to be reclaimed (recycled). The Regional Board has consulted with the State and County Health Departments regarding these reuse requirements. The State Department of Health Services (DHS) has evaluated the proposed project description and these waste discharge requirements and provided comments and recommendations, which have been incorporated into this Order. DHS has determined that this Order is consistent with DHS's requirements, recommendations and policies regarding use of recycled water and protection of water quality and public health.

11. **Stormwater** - Federal Regulations for stormwater discharges were promulgated by the U.S. EPA on November 19, 1990. The regulations [40 Code of Federal Regulations (CFR) Parts 122, 123, and 124] require specific categories of industrial activities including Publicly Owned Treatment Works (municipal wastewater treatment facilities) with capacity in excess of one million gallons per day, which discharge stormwater to obtain a NPDES permit and to implement Best Available Technology Economically Achievable (BAT) and Best Conventional Pollutant Control Technology (BCT) to control pollutants in industrial stormwater discharges.

12. Stormwater flows from the wastewater treatment facility process areas are directed to the head works and commingled with wastewater thus becoming wastewater. These blended flows are treated through the facility, therefore no industrial stormwater is discharged and separate permitting is not needed.

MONITORING PROGRAM

13. Monitoring and Reporting Program (MRP) No. R3-2005-0015 is part of this Order. The MRP requires routine wastewater influent, effluent and receiving water (ground water) sampling and analysis to verify compliance with this Order. Monitoring reports are required monthly and an annual summary report is required by January 30th of each year.

CALIFORNIA ENVIRONMENTAL QUALITY ACT (CEQA)

14. These waste discharge requirements are for an existing facility and therefore are exempt from provisions of the California Environmental Quality Act in accordance with Section 15301 of the California Water Code.

GENERAL FINDINGS

15. Discharge of waste is a privilege, not a right, and authorization to discharge is conditional upon the discharge complying with provisions of Division 7 of the California Water Code and any more stringent effluent limitations necessary to implement water quality control plans, to protect beneficial uses, and to prevent nuisance. Compliance with this Order should assure this and mitigate for any potential adverse changes in water quality due to the discharge.

16. On April 22, 2005, the Board notified the Discharger and interested agencies and persons of its intent to consider adoption of waste discharge requirements for the discharge and has provided them with a copy of the proposed Order and an opportunity to submit written comments and scheduled a public hearing.

17. In a public hearing on **September 9, 2005**, the Board heard and considered all comments pertaining to the discharge, all evidence in the record, and the applicable law and found this Order consistent with the above findings.

IT IS HEREBY ORDERED, pursuant to authority in Section 13263, 13267 and 13523 of the California Water Code, that the City of Guadalupe, its agents, successors, and assigns, may discharge waste from the Guadalupe Wastewater Facility providing compliance is maintained with the following:

All technical and monitoring reports submitted pursuant to this Order are required pursuant to Section 13267 of the California Water Code. Failure to submit reports in accordance with schedules established by this Order or attachments to this Order, or failure to submit a report of sufficient technical quality to be acceptable to the Executive Officer, may subject the Discharger to enforcement action pursuant to Section 13268 of the California Water Code.

(Note: General order conditions, definitions and the method of determining compliance are contained in the attached "Standard Provisions and Reporting Requirements for Waste Discharge Requirements," dated January 1984, referenced in paragraph E.2. of this Order.)

Throughout these requirements footnotes are listed to indicate the source of requirements specified. Requirement footnotes are as follows:

WC = Water Code
BP = Basin Plan
T22 = California Code of Regulations, Title 22, Recycled Water Criteria

Requirements without footnotes are based on staff's professional judgment.

A. PROHIBITIONS

1. Discharge to areas other than the wet weather storage pond and spray field disposal area depicted on Attachment A of this Order, is prohibited. [WC, T22]

2. Discharge to the spray fields when standing water is present or during rain events is prohibited.

3. Discharge of any wastes including overflow, bypass and runoff from transport, treatment or disposal systems to the Santa Maria River, adjacent drainage ways or adjacent properties is prohibited. [WC, T22]

4. Bypass of the treatment facilities and discharge of untreated or partially treated wastewater is prohibited.[WC, T22]

5. Discharge of wastewater within 150 feet of any well used for domestic supply or irrigation of food crops is prohibited. [T22]

B. DISCHARGE/RECYCLED WATER SPECIFICATIONS

1. Daily flow averaged over each month shall not exceed 0.96 million gallons (3,634 m^3).

2. Effluent discharged from the treatment ponds shall not exceed the following limitations:

Constituent	Units	Monthly (30-Day) Average	Daily Maximum
Settleable Solids	mL/L	0.2	0.5
BOD, 5-Day	mg/L	60	100
Suspended Solids	mg/L	60	100
Total Dissolved Solids	mg/L	1500	
Sodium	mg/L	230	
Chloride	mg/l	230	
pH		within the range 6.5 – 8.4[BP]	

3. Personnel involved in producing, transporting or using recycled water shall be informed of possible health hazards that may result from contact and use of recycled water.[T22]

7. Use of recycled water shall occur at a time and in a manner to prevent or minimize public contact with recycled water and to prevent ponding in irrigation areas.[T22]

8. Areas irrigated with recycled water shall be posted in English and Spanish to warn the public that recycled water is being used. Signs shall be no less than four inches high by eight inches wide and include the wording "RECYCLED WATER – DO NOT DRINK".[T22]

9. Recycled water valves shall be of a design to prevent public access.[T22]

10. Proper backflow and cross-connection protection for domestic water services and irrigation wells shall be provided.[T22]

11. Recycled water systems shall be properly labeled and regularly inspected to assure proper operation, absence of leaks, and absence of illegal connections.[T22]

C. RECEIVING WATER LIMITATIONS
(Ground Water Limitations)

(Receiving water quality is a result of many factors, some unrelated to the discharge. This order considers these factors and is designed to minimize the influence of the discharge to receiving waters.)

The discharge shall not cause:

1. Significant increase of mineral constituent concentrations in underlying ground water, as determined by comparison of samples collected from wells upgradient and downgradient from the discharge.[BP, WC]

2. Concentrations of chemicals and radionuclides in ground water to exceed limits set forth in Title 22, Chapter 15, Articles 4 and 5 of the California Code of Regulations.[BP, WC]

D. BIOSOLIDS SPECIFICATIONS

(Note: "Biosolids" refers to non-hazardous sewage sludge as defined in 40 CFR 503.9. Sewage sludge that is hazardous as defined in 40 CFR 261 must be disposed in accordance with RCRA. Sludge with PCB levels > 50 mg/kg must be disposed in accordance with 40 CFR 761.

1. All biosolids generated by the Discharger shall be used or disposed of in compliance with the applicable portions of:

   a. 40 CFR 503: for biosolids that are land applied, placed in surface disposal sites (dedicated land disposal sites or monofills), or incinerated;

   b. 40 CFR 258: for biosolids disposed in municipal solid waste landfills;

   c. 40 CFR 257: for all biosolids use and disposal practices not covered under 40 CFR 258 or 503.

   40 CFR 503 Subpart B (land application) applies to biosolids applied for the purpose of enhancing plant growth or for land reclamation. Section 503 Subpart C (surface disposal) applies to biosolids placed on the land for the purpose of disposal.

The Discharger is responsible for ensuring that all biosolids produced at its facility are used or disposed of in accordance with these rules, whether the discharger uses or disposes of the biosolids itself or transfers them to another party for further treatment, use, or disposal.

E. PROVISIONS

1. Dissolved oxygen concentration in treatment ponds shall be no less than 1 mg/L at the water surface.

2. Discharger shall comply with "Monitoring and Reporting Program No. R3-2005-0015" (included as Attachment C of this Order), as ordered by the Executive Officer.

3. Discharger shall comply with all items of the attached "Standard Provisions and Reporting Requirements for Waste Discharge Requirements," dated January 1984.

4. Treatment and discharge shall not cause pollution or nuisance as defined in Section 13050 of the California Water Code.[WC]

5. Treatment, storage and disposal facilities shall be managed to exclude the public and posted to warn the public of the presence of wastewater.

6. Freeboard shall exceed two feet in all wastewater ponds unless ponds are specifically designed for a different freeboard.

7. The Discharger shall develop and implement a Wastewater Collection System Management Plan. The essential elements of the Wastewater Collection System Management Plan are described on Attachment D of this Order. All elements of the Management Plan outlined in Attachment D shall be clearly labeled and addressed by the Discharger. If any element is not appropriate or applicable to a Discharger's program, the program shall provide rationale for not including the element in the program. The Management Plan shall be submitted to the Executive Officer for approval by September 9, 2006. The Management Plan shall be reviewed and updated (as needed) annually. Summary of findings and changes resulting from annual review of the plan shall be included in the Annual Monitoring Report (due January 30th).

8. The Discharger shall develop and implement a salts minimization plan in order to minimize concentrations of salts in the discharge. The salts minimization plan shall be submitted with the annual summary report beginning in 2006, with annual reviews and progress summaries included thereafter.

9. The Discharger shall perform a ground water monitoring well investigation to identify and resolve apparent data inconsistencies associated with Well 7 and implement representative upgradient ground water monitoring well facilities. An investigation plan shall be submitted by November 9, 2005. A report of findings, corrective action plan and implementation schedule shall be submitted by January 30, 2006. Necessary improvements to

ground water monitoring well facilities shall be completed by May 30, 2006.

9. Pursuant to Title 23, Division 3, Chapter 9, of the California Code of Regulations, the Discharger must submit a report to the Executive Officer, no later than **March 9, 2010,** addressing:

   a. Whether there will be changes in the continuity, character, location or volume of the discharge; and,

   b. Whether, in their opinion, there is any portion of the Order that is incorrect, obsolete or otherwise in need of revision.

I, Roger W. Briggs, Executive Officer, do hereby certify the foregoing is a full, true, and correct copy of an order adopted by the California Regional Water Quality Control Board, Central Coast Region, on September 9, 2005.

Roger Briggs, Executive Officer

September 9, 2005
Date

S:/wdr/wdr facilities/santa barbara co/Gualadupe/05-0015.wdr

PLANNING COMMISSION RESOLUTION NO. 2010-003

A Resolution of the Planning Commission of the City of Guadalupe Approving a Conditional Use Permit (Planning Application 2010-011-CUP) for the Guadalupe Wastewater Treatment Plan Improvement Project at 5125 W. Main Street

WHEREAS, the City is requesting a Conditional Use Permit (CUP) pursuant to the City's Coastal Zoning Element for repair and maintenance improvements to the existing Guadalupe Wastewater Treatment Plant (WWTP) located at 5125 W. Main Street (APN 113-030-021); and

WHEREAS, these improvements will not add capacity to the existing WWTP and consist of: upgrade to the headworks, conversion of current pond system to an extended aeration design, new sludge handling facilities, upgrade to the existing irrigation pump station, dredging the existing ponds and disposal of solids, and miscellaneous site work; and

WHEREAS, these improvements are needed to address regulatory requirements of the Regional Water Quality Control Board (RWQCB) for the plant's Waste Discharge Requirement (WDR) permit, which was issued on September 9, 2005; and

WHEREAS, the Planning Commission held a duly-noticed public hearing on October 19, 2010, at which all interested persons were given the opportunity to be heard; and

WHEREAS, the Planning Commission has reviewed Planning Application 2010-011-CUP; and,

WHEREAS, the Planning Commission finds that the project is exempt from review of the California Environmental Quality Act pursuant to Section 15301 as an minor alteration to an existing facility; and

NOW, THEREFORE, BE IT RESOLVED by the Planning Commission of the City of Guadalupe, California as follows:

The Planning Commission does hereby find and determine as follows:

Section 1. The Findings set forth in Exhibit 1 to this Resolution are hereby adopted and incorporated herein by this reference.

Section 2. The CEQA Exemption for Planning Application 2010-011-CUP is accepted.

Section 3. The Planning Commission Secretary shall certify as to the adoption of this Resolution.

UPON MOTION of Commissioner Huntley seconded by Vice Chair Ramirez the foregoing Resolution is hereby approved and adopted the 19st day of October 2010, by the following role call vote:

AYES: **5**
NOES: **0**
ABSTAIN:
ABSENT:

I, **Robert A. Mullane,** Planning Commission Secretary of the City of Guadalupe, **DO HEREBY CERTIFY** that the foregoing Resolution, being **PC Resolution No. 2010-003,** has been duly signed by the Planning Commission Chair at a meeting of the Planning Commission, held October 19, 2010, and that same was approved and adopted.

ATTEST:

Robert A. Mullane, Planning Commission Secretary

Carl Kraemer, Chair

EXHIBIT 1
FINDINGS
GUADALUPE WASTEWATER TREATMENT PLAN IMPROVEMENT
CONDITIONAL USE PERMIT
5125 W. MAIN STREET
PLANNING APPLICATION 2010-011-CUP

1.0 CEQA Findings

The project is classified as a categorical exemption from the California Environmental Quality Act (CEQA) under Class 1, Section 15301 (Existing Facilities) of the *State CEQA Guidelines.* This section states that the operation, repair, maintenance, permitting, or minor alteration of existing public structures, facilities, or mechanical equipment, involving negligible or no expansion of use shall be exempt from the provisions of CEQA.

The proposed improvements to the Guadalupe WWTP are maintenance actions that do not expand the plant or increase its design or permitted capacity. The project is proposed to address ongoing violations of RWQCB requirements. Project improvements and maintenance to the existing facility are proposed to protect the health and safety of the operators and the general public in the City of Guadalupe. Project improvements are limited to the plant site itself and its access driveway and do not result in new significant environmental impacts. Therefore, the project complies with the findings listed above and may be considered exempt from CEQA under Section 15301 of the State CEQA Guidelines.

2.0 Administrative Findings

Pursuant to City of Guadalupe Municipal Code, Section 18.72.050, a Conditional Use Permit (CUP) shall be approved only if all of the following findings can be made:

A. That the use will *be consistent with the General Plan.*

The City is requesting a Conditional Use Permit (CUP) for improvements to the Guadalupe Wastewater Treatment Plant (WWTP) located at 5125 W. Main Street. Improvements are to the existing facility and consist of: upgrade to the headworks, conversion of current pond system to an extended aeration design, new sludge handling facilities, upgrade to the existing irrigation pump station, dredging the existing ponds and disposal of solids, and miscellaneous site work.

A Conditional Use Permit (CUP) under the jurisdiction of the Planning Commission is required because the WWTP site is located in the City's Coastal Zone. The City's Coastal Zoning Element, which has been certified by the California Coastal Commission as the City's Local Coastal Program, stipulates that development within the WWTP site requires a CUP. The CUP serves as the Coastal Development Permit, and upon approval, notice of the approval would be provided to Coastal Commission staff for concurrence with the action.

The project is consistent with applicable policies in the City General Plan and would comply with all applicable provisions of the City of Guadalupe Coastal Resource Protection and Development Policies in Chapter III of the Coastal Zone Element. The project site is not located in an area subject to significant geologic, flood, fire hazards, or bluff stability issues. In addition, the site is not characterized as a visitor destination point. The proposed project would not impact coastal access or result in the conversion of agricultural land. Improvements would be consistent with requirements of the Santa Barbara County Air Pollution Control District, and they are proposed to ensure compliance with the RWQCB's WDR which would maintain the quality of coastal water courses such as the Santa Maria River. For these reasons, the use is determined to be consistent with the General Plan.

B. That the use will not *be detrimental to the health, safety, morals, comfort, and general welfare of the persons residing or working in the neighborhood of such proposed use, or whether it will be injurious or detrimental to property and improvements in the neighborhood or to the general welfare of the city.*

Since 2005, the WWTP has had ongoing issues meeting the regulatory requirements set forth in the plant's Waste Discharge Requirement (WDR) permit of the Regional Water Quality Control Board (RWQCB). Project improvements and maintenance are proposed to protect the health and safety of the operators and the general public in the City of Guadalupe, by ensuring that the requirements of the plant's WDR are met. Meeting these requirements would prevent exposure of humans and cattle to under-treated wastewater effluent and would also prevent impacts to groundwater quality of the underlying groundwater basin.

The facilities at the WWTP are in need of rehabilitation. Equipment in the headworks, the grit removal system, and the irrigation pump station require replacement. The proposed process design would address ease of operation and maintenance by City WWTP operators. Such project improvements would not be injurious or detrimental to property or the neighborhood or general welfare of the City, but rather would be beneficial.

CITY OF GUADALUPE, CALIFORNIA

NOTICE OF EXEMPTION
GUADALUPE WASTEWATER TREATMENT PLANT IMPROVEMENT PROJECT CONDITIONAL USE PERMIT

TO: **Clerk of the Board**
County of Santa Barbara
105 E. Anapamu St., Rm. 407
Santa Barbara, CA 93101

FROM: **City of Guadalupe**
918 Obispo Street
Guadalupe, CA 93434

PROJECT TITLE AND DESCRIPTION

Guadalupe Wastewater Treatment Plant Improvement Project Conditional Use Permit
5125 W. Main Street, Guadalupe, CA 93434
APN: 113-030-021
Case No. 2010-011-CUP

The City has proposed making improvements to the Guadalupe Wastewater Treatment Plant (WWTP). Improvements are to the existing facility and consist of: an upgrade to the headworks, conversion of current pond system to an extended aeration design, new sludge handling facilities, an upgrade to the existing irrigation pump station, dredging the existing ponds and disposal of solids, and miscellaneous site work. The access road to the facility will also be repaved to provide an improved, all-weather access to the plant. These improvements do not increase the capacity to the existing WWTP above permitted levels. The improvements are needed to address regulatory requirements of the Regional Water Quality Control Board (RWQCB) for the plant's waste discharge requirements. The current plant has a design capacity of 0.96 MGD, which is adequate to meet the needs of the City's projected growth for the next 20 years.

FINDING

The Planning Department of the City of Guadalupe has reviewed the above proposed project and found it to be exempt from the provisions of the California Environmental Quality Act (CEQA).

- ☐ Ministerial Project
- ☒ Categorical Exemption [CEQA Guidelines, Section 15301]
- ☐ Statutory Exemption
- ☐ Emergency Project
- ☐ Disapproval [CEQA Guidelines, Section 15270]
- ☐ No Possibility of Significant Effect [CEQA Guidelines, Section 15061(b)(3)]

SUPPORTING REASONS

The proposed project may be found categorically exempt under Section 15301 of the State Guidelines for the Implementation of the California Environmental Quality Act. Section 15301 includes projects characterized as existing facilities. This section states that the operation, repair, maintenance, permitting, or minor alteration of existing public structures, facilities, or mechanical equipment, involving negligible or no expansion of use beyond that existing at the time of the lead agency's determination shall be exempt from the provisions of CEQA.

As mentioned, the proposed improvements to the Guadalupe WWTP involve facility maintenance and equipment replacement activities that do not add capacity to the existing WWTP. Miscellaneous site work would include replacement of the existing standby emergency generator and 300 gallon, above ground diesel fuel tank. The existing standby emergency generator and associated fuel tank would be replaced with a new generator. The new fuel tank would have a capacity of approximately 300-400 gallons, with sub-base and double-walled fuel storage tank with leak detection. These improvements would meet APCD and Fire Department requirements and standards, and the new diesel fuel tank would be sub-base, double wall with fuel leak detection and of similar capacity.

Since 2005, the WWTP has not consistently met the plant's Waste Discharge Requirements (WDR). Project improvements and maintenance to the existing facility are proposed to protect the health and safety of the operators and the general public in the City of Guadalupe. In bringing the WWTP into compliance with WDR, the project would address potential health risks of exposure of humans and cattle to under treated wastewater. The project would also address potential impacts to long-term groundwater quality associated with the underlying groundwater basin. The project site is not located in an area subject to significant geologic, flood, fire hazards, or bluff stability issues. Therefore, the project complies with the requirements listed above and is exempt from the California Environmental Quality Act under Section 15301 of the CEQA Guidelines.

Robert Mullane City Planner	(805) 547-0900 Phone	10/21/10 Date

Technical Memorandum 1

Conceptual Design Report

Prepared for

City of Guadalupe

Wastewater Treatment Plant Improvement Project

Prepared By

DUDEK

May 2010

TABLE OF CONTENTS

1 EXECUTIVE SUMMARY 1
2 INTRODUCTION 2
3 PROJECT PLANNING 2
3.1 Plant History, Location, and Description 2
3.2 Growth Areas and Population Trends 3
3.3 Effluent Requirements 3
3.4 Future Treatment Upgrade Requirements 3
4 Existing Conditions 5
4.1 Condition of Facilities 5
4.1.1 Headworks 5
4.1.2 Grit Removal System 6
4.1.3 AIPS Ponds 7
4.1.4 Sludge Handling Facilities 8
4.1.5 Effluent Ditch and Holding Ponds 8
4.1.6 Irrigation Pump Station 9
4.1.7 Spray Distribution System 9
4.2 Hydraulic Analysis 10
4.3 Influent and Effluent Analysis 10
4.3.1 Suspended Solids 10
4.3.2 Biochemical Oxygen Demand (BOD) 11
4.3.3 Settleable Solids 11
4.3.4 pH 11
4.3.5 Salts 11
4.4 Design Parameters 11
5 Need for the Project 12
5.1 Health and Safety 12
5.2 System O&M 12
5.3 Growth 12
6 Alternative Analysis 12
6.1 Headworks 12
6.1.1 Screens 12
6.1.2 Influent Pumps 13
6.2 Grit Chamber 13
6.2.1 Alternative 1: Convert the Grit Pumping System to a Top Mounted Pump Configuration. 14
6.2.2 Alternative 2: Renovations of the Current System 14
6.3 Ponds 15
6.3.1 Alternative 1: Upgrade Existing AIPS 15
6.3.2 Alternative 2: Retrofit Existing Ponds with Biolac®-R System 15
6.4 Sludge Treatment 17
6.4.1 Alternative 1: Sludge Holding Ponds 17
6.4.2 Alternative 2: Sand Drying Beds 17
6.4.3 Alternative 3: Paved Drying Beds 18

6.4.4 Alternative 4: Mechanical Dewatering Equipment ... 18
6.4.5 Alternative 5: Vacuum Assisted Drying Beds ... 18
6.4.6 Alternative 6: Quick Dry® Filter Beds ... 19
6.4.7 Sludge Haul-off ... 19
6.5 Effluent Pipeline and Holding Ponds ... 19
6.6 Irrigation Pump Station ... 20
6.7 Spray Distribution System ... 20
6.7.1 Alternative 1: Moveable System ... 20
6.7.2 Alternative 2: Underground System ... 21
6.8 Site Services ... 21
7 Recommendations ... 22
7.1 Proposed Project ... 22
7.2 Issues for Further Consideration ... 24
7.2.1 Sequence of Construction ... 24
7.2.2 Dredging and Disposal of Sludge from Existing Ponds ... 24
7.2.3 Long Term Sludge Dewatering Strategy ... 24
7.2.4 Lease Agreements with Adjacent Property Owners ... 24
7.2.5 Electrical Design Enhancements ... 25
7.2.6 Holding Pond Redesign to Alleviate Danger during Flooding ... 25
7.2.7 Permitting ... 25
7.3 Provisions for Future Capacity and Tertiary Treatment/Water Reuse Upgrades ... 26

TABLES

Table 1 – Population Growth Trends – Guadalupe vs. Santa Barbara County, 1990-2009 ... 3
Table 2 – Effluent Discharge Limitations ... 3
Table 3 – Existing Pond Dimension Summary ... 7
Table 4 – Current Hydraulic Criteria ... 10
Table 5 – Design Influent Parameters ... 12
Table 6 – Headworks Screen Alternatives ... 13
Table 7 – Proposed Retrofitted Pond Size ... 16
Table 8 – Biolac® Design Criteria ... 16
Table 9 – Summary of Proposed Project ... 22
Table 10 – Summary of Near Term Project ... 23

FIGURES

Figure 1 – Vicinity Map
Figure 2 – Existing Process Flow Diagram
Figure 3 – Condition of Headworks
Figure 4 – Condition of Grit Removal System
Figure 5 – Condition of AIPS
Figure 6 – Condition of Sludge Handling Facilities
Figure 7 – Condition of Effluent Ditch and Holding Ponds
Figure 8 – Condition of Irrigation Pump Station
Figure 9 – Condition of Spray Irrigation System
Figure 10 – Monthly Average Daily Flow
Figure 11 – TSS in the Plant Influent and Effluent
Figure 12 – BOD in the Plant Influent and Effluent
Figure 13 – Settleable Solids in the Plant Influent and Effluent
Figure 14 – pH Levels in the Influent and Effluent
Figure 15 – TDS, Sodium, and Chloride in the Plant Effluent
Figure 16 – Preliminary Site Layout
Figure 17 – Proposed Layout of the Irrigation System
Figure 18 – Proposed Process Flow Diagram

APPENDICES

Appendix A – Headworks Equipment Brochures
Appendix B – Grit Removal System Equipment Details
Appendix C – Biolac® Equipment Brochures
Appendix D – Alternate Sludge Dewatering Technologies Brochures
Appendix E – Cost Estimate
Appendix F – Process and Instrumentation Diagrams (P&IDs)

1 EXECUTIVE SUMMARY

The City of Guadalupe wastewater treatment plant has had ongoing violations of the Waste Discharge Requirement (WDR) permit since 2005. This conceptual design memorandum highlights the action plan for remediation of this problem by proposing several upgrades to the treatment plant.

Review of the condition of the existing plant revealed several mechanical and process deficiencies that will be corrected by this project. The design life considered for this project with upgrades is 30 years assuming current levels of regulatory standards. The plant will also be designed to enable future upgrades to tertiary treatment and water reuse. Apart from the need to meet the requirements of the current discharge permit, the project is required to meet environmental standards and address the ease of operation and maintenance.

The proposed project consists of: upgrade to the headworks, rehabilitation of the grit removal system, conversion of current pond system to an extended aeration design, new sludge handling facilities, new effluent disposal pipeline, upgrade to the existing irrigation pump station, redesign of the spray field, dredging the existing ponds and disposal of solids, and miscellaneous site work. The preliminary estimate of the proposed project cost is approximately $7,728,000.

The grant available for this project is limited, and therefore a reduced project scope has been proposed to enable the plant to attain reliable compliance with the WDR by the end of 2011. This phased approach will first address the upgrade to the headworks, conversion of current pond system to an extended aeration design, new sludge handling facilities, dredging the existing ponds and disposal of solids, and minimal site work. This reduced scope project cost estimate is approximately $4,032,000. It is recommended that the City pursue additional funding resources to enable the completion of the design and construction of the entire project within a short term (2 to 3 years) time frame. The next technical memorandum (TM2) will provide more detail on the selection of equipment and actual design elements, including an implementation schedule.

2 INTRODUCTION

The City of Guadalupe, Department of Public Works, currently owns and operates a wastewater treatment plant (WWTP) utilizing Advanced Integrated Pond System (AIPS) under Waste Discharge Requirement (WDR) Order No. R3-2005-0015. Since 2005 there have been total suspended solids (TSS) and biochemical oxygen demand (BOD) violations. Possible reasons of these excesses can be attributed to the following:

- Food waste discharges from local packing facilities (vegetable matter)
- Ineffective preliminary treatment at treatment plant (lack of effective grit removal)
- Failed equipment and overloaded pond system
- Operational inefficiencies of the treatment process

The City commissioned Dudek to provide professional engineering services to plan and design improvements to the existing plant to ensure compliance with the WDR.

3 PROJECT PLANNING

3.1 Plant History, Location, and Description

The WWTP was first constructed in the 1960s to serve the City of Guadalupe and since has gone through multiple renovations and upgrades. The original design included headworks, aerator, two clarifiers, digester, sludge drying beds, and holding ponds. In 1979, various facilities were refurbished and upgraded, along with the demolition of the aerator, construction of new headworks and lagoons, spray distribution system and off-site holding ponds. The plant upgrade in 1992 included new headworks, Pista® grit removal system, new sludge drying beds, irrigation pump station, and spray distribution system across the river. In 2004, the aerated lagoons were converted to the AIPS.

The WWTP is located at the western edge of the City of Guadalupe, which is in northwest Santa Barbara County. Agricultural land borders the south and west sides of the plant and the Santa Maria River is approximately 1,000 feet north of the plant. Figure 1 shows the vicinity map.

The existing process flow diagram is shown in Figure 2. The process units at the plant are:

- Headworks consisting of an influent gate; two parallel open channels, one with a manually cleaned screen and the other with a comminutor; followed by the influent pumps.
- Grit removal system consisting of a grit pump system and classifier.
- AIPS ponds consisting of four ponds, each with sludge preselector digester pits and surface aeration.
- Effluent discharge via an open unlined ditch to the off-site holding ponds.

- Effluent holding ponds consisting of three ponds with a total approximate storage volume of 10.5 million gallons.
- Irrigation Pump Station with two 60 HP and one 88 HP pumps.
- 71 acre irrigation field to spray the effluent for disposal.

3.2 Growth Areas and Population Trends

The City of Guadalupe has experienced moderate population growth since 1990. Table 1 shows the population growth trend between 1990 and 2009.

Table 1 – Population Growth Trends – Guadalupe vs. Santa Barbara County, 1990-2009

Geographic Area	1990	2000	2009	Percent Change (1990-2000)	Percent Change (2000-2009)
Guadalupe	5,479	5,659	6,534	3.3%	15.5%
Santa Barbara County	369,608	399,347	431,312	8.1%	8.0%

Sources: US Census Bureau, SF3:PF1, 1990, 2000; California Department of Finance, Report E-5, 2009

The planning horizon for this treatment plant upgrade is 30 years. Per the 2007 Santa Barbara County Association of Governments Regional Growth Forecast, the population of the City is projected to be approximately 12,000 in 2040.

3.3 Effluent Requirements

The WDR dictates the maximum effluent levels which are presented in Table 2.

Table 2 – Effluent Discharge Limitations

Constituent	Units	Monthly Average	Daily Maximum
Flow	MGD	0.96	
Settleable Solids	mL/L	0.2	0.5
BOD, 5-Day	mg/L	60	100
Suspended Solids	mg/L	60	100
Total Dissolved Solids	mg/L	1500	
Sodium	mg/L	230	
Chloride	mg/L	230	
pH	Within the range 6.5 – 8.4		

3.4 Future Treatment Upgrade Requirements

The City has expressed interest to ultimately upgrade the treatment plant to tertiary treatment and produce Title 22 recycled water.

Under Title 22, there are three different levels of recycled water quality, the most stringent level being that for unrestricted use (which is known as disinfected tertiary recycled water). Disinfected, tertiary recycled water is defined in 22 CCR 60301.230 and requires that secondary effluent be subsequently filtered and disinfected, while meeting the following two criteria:

- The filtered wastewater has been disinfected by either:
  - A chlorine disinfection process following filtration that provides a CT (the product of total chlorine residual and modal contact time measured at the same point) value of not less than 450 milligram-minutes per liter at all times with a modal contact time of at least 90 minutes, based on peak day dry weather design flow; or,
  - A disinfection process that, when combined with the filtration process, has been demonstrated to inactivate and/or remove 99.999 percent of the plaque-forming units of F-specific bacteriophage MS2, or polio virus in the wastewater. A virus that is at least as resistant to disinfection as poliovirus may be used for purposes of the demonstration.
- The median concentration of total coliform bacteria measured in the disinfected effluent does not exceed an maximum probable number (MPN) of 2.2 per 100 milliliters utilizing the bacteriological results of the last seven days, for which analyses have been completed and the number of total coliform bacteria does not exceed an MPN of 23 per 100 milliliters in more than one sample in any 30 day period. No sample shall exceed an MPN of 240 total coliform bacteria per 100 milliliters.

Filtered wastewater, in turn, is defined in 22 CCR 60301.320 as an oxidized wastewater that meets either of the following criteria:

- Has been coagulated and passed through natural undisturbed soils or a bed of filter media pursuant to the following:
  - At a rate that does not exceed five gallons per minute per square foot of surface area in mono, dual or mixed media gravity, upflow or pressure filtration systems, or does not exceed 2 gallons per minute per square foot of surface area in traveling bridge automatic backwash filters; and,
  - So that the turbidity of the filtered wastewater does not exceed any of the following:
    - An average of 2 NTU within a 24-hour period;
    - 5 NTU more than 5 percent of the time within a 24-hour period; and NTU at any time.
- Has been passed through a microfiltration, ultrafiltration, nanofiltration, or reverse osmosis membrane so that the turbidity of the filtered wastewater does not exceed any of the following:
  - 0.2 NTU more than 5% of the time within a 24-hour period; and
  - 0.5 NTU at any time (State of California, 2008)

Direct filtration is only applicable as a filter option when the water quality of the filter influent does not exceed 5.0 NTU for more than 15 minutes, and never exceeds 10.0 NTU. Where direct filtration is not applicable, conventional full Title 22 treatment, which includes secondary treatment followed by coagulation, flocculation, and sedimentation, prior to filtration, is required.

In summary, the recycled water quality requirement varies with applied technology and reuse objectives in the State of California. In general, the recycled water quality will have, as a minimum, turbidity of 2 NTU or less and total coliform less than 2.2 MPN/100 mL. To meet Title 22 standards for reuse, tertiary treatment followed by disinfection will need to generate an effluent with at most 10 mg/L of BOD, 10 mg/L of TSS and 2 mg/L of TKN[1]. However, the economics of a recycled water market will need to be studied before the feasibility of a tertiary treatment project can be established.

4 EXISTING CONDITIONS

4.1 Condition of Facilities

4.1.1 Headworks

Figure 3 shows the condition of the influent structure. The wastewater flows into the plant via a 24-inch sewer, approximately 15-feet deep. The headworks structure is approximately 20-feet deep. The sluice gate installed at the influent channel has never been exercised, but appears to be in good condition.

Following the sluice gate, the influent sewer bifurcates into two open channels, each equipped with stop gates. A communitor, which grinds the influent solids, is located on the southern channel, while a manually cleaned bar screen is located on the northern channel. During normal operation, the stop gate for the northern channel is closed and all flow is directed through the communitor. The communitor is approximately 18 years old and has reportedly had several breakdowns. The cutting mechanism is also reported to have worn out and replacement parts are not readily available.

Flow from the two channels spill into the influent pump station wet well. Currently three 20 HP submersible centrifugal pumps are installed with space allocated for a future fourth pump. These pumps have problems with movement along the guide rails and seating. They are also at the end of their useful life. A high water level alarm is lacking at the pump station which has led to several instances of flooding. There is a manual lift crane for the removal and handling of the pumps.

One check valve on the pipe manifold was been replaced recently but the other two are leaking and in need of replacement. The flowmeter, though working, is also at the end of its useful life and needs replacement.

[1] Total Kjeldahl Nitrogen, the sum of organic nitrogen; ammonia (NH3) and ammonium (NH4+) in wastewater.

The pumps are operated by variable frequency drives (VFDs) which reside at ground level next to the headworks pipe manifold. Two of the three VFDs were replaced in 2008. There is no air conditioning and only minimal dust filtration at the VFD enclosure which has led to frequent failures of the VFDs.

The concrete structure, metal stairs, railing, and grating appear to be in good physical condition and do not require rehabilitation. The lights in the structure are currently not functioning and are due for replacement. The structure has reportedly flooded several times in the past resulting in the electrical system not functioning.

4.1.2 Grit Removal System

At the present time, the entire grit removal unit is being bypassed and the effluent from the headworks flows directly to the ponds. For AIPS, removal of grit is a critical step in reducing the inert load to the initial "digester" pits. With the grit system offline, all grit is collected in the ponds, displacing treatment volume intended for degradation of organic solids, and therefore contributing to the observed overloading.

Figure 4 shows condition of the grit removal facilities. The existing concrete structure, piping, metal stairs, railing, grating, and vortex system appear to be in good condition and do not require rehabilitation.

The grit removal system is not being utilized because of regular clogging problems at the grit pump. The current configuration incorporates a flooded suction grit removal pump and no provision for high pressure purge. To reduce the probability of clogging in a flooded suction configuration, the following design could have been implemented as recommended by the equipment manufacturer:

- A water flushing connection fitted to the pump suction pipe. While there is a water line in the area, it is not adequately sized or connected to the grit line to provide adequate flushing.
- A high-pressure air line to the bottom of the grit pocket. Before starting the pump, the suction line would be flushed and the grit in the pocket should be suspended by agitating with compressed air.
- Discharge piping less than 20 feet and a straight run is recommended. Current discharge piping is approximately 48 feet and has four bends.
- Pinch valve on discharge line. Current configuration has a gate valve which has seating problem due to grit accumulation.
- Check valves are not recommended on grit piping since they get grit locked, as is the case in this installation.

Since the current system lacks these recommended characteristics, the system has been regularly plagued by clogging. The grit classifier is from the 1979 plant upgrade and is severely corroded and beyond repair. While the grit propeller is currently functioning, it is

recommended to replace the rotating propeller drive motor with all the improvements in this facility.

4.1.3 AIPS Ponds

Typical AIPS facilities are composed of a series of four earthen ponds using algae and bacteria to treat waste. The wastewater first flows into deep pits in an advanced facultative pond (First Pond, Facultative Pond), where solids are fermented to methane and most pathogens are removed. The water then flows to a high rate pond (Second Pond, High Rate Pond) for rapid growth of algae and concurrent production of oxygen, oxidation of organics, ammonia removal, heavy metal removal and disinfection. Typically, there are at least a couple of downstream ponds to settle and remove algae (Third Pond, Settling Pond) and provide further disinfection by exposure to sun's UV rays (Fourth Pond, Maturation Pond)

At Guadalupe, the AIPS has four ponds, each with separate digester and aeration cells, but does not follow the typical AIPS configuration. (Refer to Figure 2.) The influent flows into a splitter chamber and is split by two weirs. Approximately 66% of the flow flows into Pond 2 and thereafter to Pond 4, whereas 33% of the flow is received by Pond 1 and thereafter by Pond 3. The pond dimensions are summarized in Table 3.

Table 3 – Existing Pond Dimension Summary

Parameter	Pond 1	Pond 2	Pond 3	Pond 4
Water Depth (ft)	11	11	11	11
Free board (ft)	2.5	2.5	3	3
Side Slope (perimeter)	3:1	3:1	3:1	3:1
Side Slope (interior berm)	2.5:1	2.5:1	2.5:1	2.5:1
Length (ft)	300	300	167	167
Width (ft)	193	286.5	190	283.5
Water surface area (acre)	1.28	1.92	0.68	1.04
Water Volume (million gal.)	3.3	5.5	1.5	2.2

At the submerged pits at the head of each pond, anaerobic degradation of settled solids occur followed by aerobic degradation of organic matter in the water column. The aerobic stabilization relies heavily on oxygenation from algae growing in the pond system, which emit oxygen during their photosynthesis process. To supplement and maintain aerobic conditions in the upper pond layer, and ensure odor-free operation, the ponds are equipped with brush-type mechanical aerators, which are controlled either manually or by dissolved oxygen probes in the first stage ponds. The mechanical aerators suffer from frequent breakdowns and require excessive maintenance. At this time three of the eight aerators are reported to be near failure and in need of replacement. Figure 5 shows the condition of facilities at the AIPS ponds.

The point of compliance for the WWTP is set at the AIPS pond effluent (refer to Figure 2). This configuration differs from the conventional AIPS due to the lack of settling pond and maturation ponds to complete the treatment. A possible reason for non compliance of the WDR may be due to the location of this sampling point. The algae developing in the high-rate region of the treatment train is not providing sufficient time to settle out.

Typical AIPS designs generate less than one feet of sludge over a five to seven year period. The facility at St. Helena, California, has not had to dispose of primary sludge in over 30 years. However, the ponds at this plant have accumulated approximately six feet of sludge within six years of operation.

In addition to the high sludge layer, algal blooms during summer months are also reported as an issue of concern with the City's facility. Retention times over three days, with moderate mixing energy applied to the pond, typically promote algal growth. With only the smallest two-pond train (Nos. 1 & 3) in service at current flows, the hydraulic retention time is approximately eight days. However, it is not recommended that only one pond be operated.

The earthen berms, geomembrane liners, flow distribution and transfer structures, and recirculation pumps are working properly and are in good condition.

4.1.4 Sludge Handling Facilities

The condition of sludge handling facilities is shown in Figure 6. There are two existing sets of sand sludge drying beds at Guadalupe's WWTP. The drying beds at the north end of the plant were re-constructed in 1979 and later abandoned in 1992. Currently these beds are in dire condition and will need to remain abandoned or demolished. The beds at the west side of the plant were constructed in 1992 have not been used since 2004 and are overgrown with plants. These may not require substantial structural rehabilitation, but would need a new media and drainage piping system.

The existing anaerobic digester is from the 1960s construction and has not been used since 2004. The concrete is in poor condition and the sludge was never pumped out. Consequently, this digester could never be brought back online and will need to be demolished.

4.1.5 Effluent Ditch and Holding Ponds

The effluent from the plant runs along an unprotected earthen ditch along the uphill border of a 50-acre pasture area as shown in Figure 7. Since this ditch runs through grazing pastures, cattle constantly walk over the ditch which causes the effluent to be released at several locations along the ditch. The effluent subsequently flows overland into Pond C, which is the largest and is connected with Pond B via an equalization pipe. Effluent is designed to flow through Pond B and Pond A through a sluice gate. All three ponds are designed to be equalized to maintain equal water surface elevations. The effluent holding ponds A, B, and C were designed to have approximate storage volumes of 6, 2.5, and 2 million gallons respectively.

The equalization pipe connecting the Ponds C and B appears to be clogged since Pond C is at a very high level compared to Ponds A and B, which appear to be well below the normal operation level. The slide gate between Ponds A and B also appears to have deteriorated and requires attention.

The entire area of Ponds A and B, and a small segment of pond C are within the FEMA 100-year flood plain. Significant erosion has been observed around Pond C (see Figure 7), including the erosion of the access road to the irrigation pump station and electrical poles and fence. It

also appears that the original berm elevations from the 1992 construction have not been maintained. This issue will be verified after survey is performed during the preliminary design phase of this project.

4.1.6 Irrigation Pump Station

Figure 8 shows condition of the irrigation pump station. The irrigation pump station is situated in between Pond B and C and receives water directly from both these ponds. Effluent from each pond flows by gravity into the pump station wet well through two 16-inch PVC pipes. The pump station is comprised of a 22 feet deep wet well with three submersible centrifugal pumps and space reserved for a future fourth pump.

Two of the existing 88HP pumps were replaced in 2006 and 2008 respectively with two new 60HP pumps, and are reported to be working well. The ductile iron piping, pond intakes, and concrete structure are also reported to be in good condition. The irrigation filters have never been serviced and cattle have damaged multiple parts of these filters.

The irrigation pump station motor control center and variable frequency drives are currently located in a small, cramped space, making operational control and maintenance activities more difficult and potentially unsafe. The VFDs were replaced in 2005. However there is no air conditioning and only minimal dust filtration at the VFD enclosure which has led to frequent failures of the VFDs. The absence of a pump lift crane also makes pump maintenance difficult. The facility appears to have been equipped with an alarm system with telemetry, but it is not functional.

4.1.7 Spray Distribution System

From the irrigation pump station, an underground 12-inch PVC (C-900) force main delivers the effluent north of the Santa Maria River to a spray distribution system which irrigates a 71-acre cattle pasture. It has been reported that the butterfly valves at the end of the force main are not functioning properly and may need replacement. The entire 71-acre pasture is within the 100-year flood plain.

Figure 9 shows condition of the spray irrigation system. The original 1992 spray distribution system had approximately 34,500 feet of above ground 3-inch aluminum piping with sprinklers spaced every 60-feet. Nearly all of the 3-inch aluminum piping and sprinklers have been heavily damaged by cattle grazing. As a result, all the above ground irrigation lines and sprinklers were removed from service without replacement. Currently, two laterals have been assembled with the remaining pipes, and a high capacity sprinkler gun installed at each lateral. The larger sprinkler guns do not distribute effluent efficiently, and need to be repositioned twice a day to minimize standing water.

4.2 Hydraulic Analysis

The current average daily flow is approximately 0.6 million gallons per day (MGD)[2]. Figure 10 shows data of monthly average for the last five years.

The flow measurement is taken once a day, typically at 10:00AM each day. There are no diurnal flow variation records available. Hence, maximum day and peak hour flows are assumed. The current and projected operational criteria are presented in Table 4.

Table 4 – Current Hydraulic Criteria

Parameter	2009	2040[3]
Residents	6,534	12,000
Average Annual Flow (gpd)	599,000[4]	1,104,000
Maximum day Flow (gpd)	1,037,000[5]	1,911,300[6]
Peaking Factor	3.2[7]	3.0[8]
Peak Hourly Flow (MGD)	1.92	3.31
Per capita average flow (gal / capita / day)	92	92[9]

Based on the analysis above, the WDR limit for flow at 0.96MGD seems adequate in the near term.

4.3 Influent and Effluent Analysis

4.3.1 Suspended Solids

Figure 11 shows the trend in Total Suspended Solids (TSS) in the plant influent and effluent. The influent data suggests a typical domestic wastewater with average approximately 230 mg/L and ranging from 150 mg/L to 320mg/L with occasional spikes of 400mg/L. The cause of these spikes is unknown, but given the rarity of the events, it is not a cause of concern.

The effluent data have been found to fluctuate on an annual cycle, with the highest levels in the summer and the lowest levels, and occasionally compliant, in the winter months. The plant has consistently violated the WDR permit levels which suggest incomplete treatment at the plant. High TSS in the summer months can be attributed to algal bloom in the ponds. The observed rise of TSS annual average is likely caused by the sludge levels in the AIPS rising far beyond optimal levels for effective treatment.

---

[2] Based on monthly monitoring reports, Jan 2004 – Dec 2009.
[3] Projected values.
[4] Average of monthly average flows from Jan 2009 through December 2009.
[5] Maximum from flow records (Jan 2009 through December 2009).
[6] Assumed same correlation between average annual flow and maximum day flow in 2040 as 2009.
[7] Recommended Standards for Wastewater Facilities, 2004 edition.
[8] Recommended Standards for Wastewater Facilities, 2004 edition.
[9] Assumed to be the same as in 2009.

4.3.2 Biochemical Oxygen Demand (BOD)

Figure 12 shows the trend in BOD in the plant influent and effluent. Similar to TSS, the influent data suggests a typical domestic wastewater with average approximately 265 mg/L and ranging from 150 mg/L to 350mg/L with occasional spikes around 400mg/L.

Since July 2005, the effluent levels have gradually increased and since April 2006 violating the WDR regularly. From the data it is quite evident that effective treatment is not being achieved at the AIPS ponds. In 2009, there is significant increase in BOD in the effluent suggesting high sludge volumes in the ponds reducing the capacity of the plant.

4.3.3 Settleable Solids

Figure 13 show the analysis of settleable solids in the plant influent and effluent. No data was available for the influent settleable solids levels for the year 2009. Average settleable solids was approximately 15mL/L with typically non-detect at the effluent. However in 2009, there have been some violations of the WDR, again possibly due to ineffective treatment in the AIPS ponds causing solids discharge.

4.3.4 pH

Figure 14 shows the pH levels in the influent and effluent. While the pH levels in the plant effluent has always been in compliance with the WDR, it was interesting to note that the effluent was a bit acidic compared to the influent coming into the plant.

4.3.5 Salts

Figure 15 show the Total Dissolved Solids (TDS), Sodium, and Chloride in the plant effluent. The influent values are not required to be measured. The effluent levels of Total Dissolved Solids (TDS), Sodium, and Chloride is currently in compliance with the WDR, and has been for at least the last 5 years. Samples are usually taken on a semi-annual basis, however, some sample periods have missing data.

4.4 Design Parameters

Based on the analysis of the influent data from the plant, the influent parameters have been assumed for the project and are given in Table 5.

Table 5 – Design Influent Parameters

Constituent	Units	Value
Average Daily Wastewater Flow[10]	MGD	0.96
Peak Wet Weather Flow[11]	MGD	3.84
BOD, 5-Day[12]	mg/L	300
Suspended Solids	mg/L	300
TKN (no data available, assumed)	mg/L	50
Ammonia as Nitrogen (no data available, assumed)	mg/L	35
Alkalinity (no data available, assumed)	mg/L	410

5 NEED FOR THE PROJECT

5.1 Health and Safety

Health and safety of the operators and the general public in the City of Guadalupe is a primary concern. For the last five years, this plant has been struggling to meet the WDR limits. Along with failing infrastructure, there is a potential health risk of exposure of humans and cattle to under treated wastewater. The existence of a groundwater basin lying below the effluent disposal field creates a concern for long term groundwater quality.

5.2 System O&M

As evident in Section 4.1, the facilities at this treatment plant have deteriorated and are in dire need of rehabilitation. Equipment in the headworks, the grit removal system, and the irrigation pump station require replacement. The proposed process design should also address ease of operation and maintenance by Grade II operators.

5.3 Growth

No upgrade is required for this plant at this time to meet the short term growth needs of the City of Guadalupe. The current plant at design capacity of 0.96 MGD, if operating efficiently, will adequately meet the needs of the area for the next 20 years, provided the current General Plan is adhered to.

6 ALTERNATIVE ANALYSIS

6.1 Headworks

6.1.1 Screens

As discussed in Section 4.1, the comminutor is close to the end of its useful life and in need of replacement. Since the plant has a possibility of receiving large particulate vegetable matter

[10] Based on WDR.

[11] Based on a conservative peaking factor of 4.0.

[12] Though the historical average at the plant is approximately 260mg/L, 300mg/L has been assumed as a conservative design parameter. Also applies to TSS.

from local food processing facilities, removing those at the head of the plant instead of grinding them is preferred. Grinding the bulk vegetable matter leads to unusually high organic loads at the plant which may require higher capacity process equipment downstream and therefore higher capital, operation and maintenance costs.

This project proposes to replace the existing communitor with a new six millimeter (1/4-inch) mechanically cleaned bar screen, while retaining the manual bar rack as a stand-by option. The new screen will remove the significant amount of unprocessed bulk vegetable matter from the plant influent, as well as the coarse solids often contained in raw sewage. The screenings will be delivered to a washer/compactor to be washed, dewatered, and then collected in waste bins for disposal.

During preliminary design, several options for mechanical bar screens will be reviewed and the project specifications created will reflect the best alternative with respect to capital cost, installation within site constraints, and ease of operation and maintenance. Some alternatives to be evaluated are shown in Table 6, and equipment brochures of equipment are presented in Appendix A.

Table 6 – Headworks Screen Alternatives

Parameter	Duperon FlexRake FPFS	Vulcan VMR	Huber RakeMax	Huber SSV
Type	Multi Rake	Multi Rake	Multi Rake	Step Screen
Spacing (mm)	6.35	6.35	6	6
Motor HP	0.5	Not available	2.0	3.0

6.1.2 Influent Pumps

As discussed in Section 4.1, the influent pumps and guide rails are close to the end of their useful life and are in need of replacement. Not replacing them will lead to diminished reliability, excessive operational difficulty, and sewage overflows.

In this project, the three submersible centrifugal pumps located in the influent pump station wet well are proposed to be replaced with new, solids-handling, submersible sewage pumps. The replacement will include upgrade of the mounting components and guide rails. The system curve will be evaluated to ensure that the selected pumps provide the necessary capacity. A new motorized crane will be installed to facilitate the removal of pumps.

The one remaining existing VFD from 1992 will be replaced to match the VFDs installed in 2008. The VFD enclosure will be replaced with adequate dust control and air conditioning.

6.2 Grit Chamber

As discussed in Section 4.1, the grit removal system is in need of significant upgrades in order to properly function. Removal of grit is a critical step for the effective operation of downstream process components. To repair the current non-functioning grit removal system, two alternatives have been suggested as follows:

6.2.1 Alternative 1: Convert the Grit Pumping System to a Top Mounted Pump Configuration.

This alternative would consist of:

- New rotating propeller drive motor and shaft extended down to the bottom sump with grit fluidizer vanes, which keep the grit fluidized.
- Installation of a top mounted Turbo Pista® Grit Pump.
- Installation of a suction line, which extends down inside the drive tube to the storage hopper bottom. Having a vertical suction line will reduce the probability of plugging in the suction pipe.
- Replacement and relocation of the grit screw conveyor to west end of grit chamber and close to the grit pump.
- Realignment of grit discharge piping to ensure the shortest and straightest possible alignment.
- Installation of a plug or pinch valve on discharge line to allow for pump priming.

Equipment details for this alternative are presented in Appendix B.

6.2.2 Alternative 2: Renovations of the Current System

This alternative would consist of:

- New rotating propeller drive motor and shaft extended down to the bottom sump with grit fluidizer vanes, which keep the grit fluidized.
- Installing a high-pressure water connection for flushing the suction line.
- Replacing the existing grit pump.
- Removing the existing check valve and replacing with a spool piece.
- Replacing the existing gate valve on the discharge line with a pinch valve.
- Replacing the existing gate valve on the suction line with a plug valve turned such that the rubber face seals against the direction of flow.
- Replacement of the grit screw conveyor.

Capital cost for Alternative 1 is approximately $223,000, and for Alternative 2 is approximately $199,000. While Alternative 2 is slightly cheaper than Alternative 1, Alternative 1 has the following advantages which may lead to less operational breakdowns:

- Fluidizer vanes that extend the rotating mechanism down to the bottom of the chamber will prevent packing and bridging in the chamber.
- Shorter discharge piping therefore less chances of clogging.

- Less number of obstructions around grit pumping, e.g. valves, thereby minimizing chances of clogging.
- Grit conveyor in close proximity of the grit pump, also reducing the chances of clogging.
- One manufacturer providing all the equipment relating to the grit removal system therefore providing a combined warranty on the operation of the system

Based on these advantages, Alternative 1 is recommended for this project.

6.3 Ponds

6.3.1 Alternative 1: Upgrade Existing AIPS

As discussed in previous sections, it is evident that the AIPS is not functioning and has not met the design intent since the beginning of the installation. While there are reports of successful AIPS plants operating in various regions in the United States, it does not seem to be the right choice for the City for the following reasons:

- Demonstrated inability to treat the wastewater to meet the WDR limits,
- High organic loads without pre-treatment leading to excessive sludge accumulation in the ponds,
- The current design is not a 'true' AIPS, i.e. series of four ponds performing four distinct stages of treatment,
- Failing aerators not delivering adequate quantity of oxygen or mixing. Repair of the aerators is labor intensive and the original manufacturer is no longer in business, thereby making parts not readily available.
- Operators with limited knowledge of process design and operation of an AIPS.

6.3.2 Alternative 2: Retrofit Existing Ponds with Biolac®-R System

The Biolac® system is a cost-effective solution for converting an existing earthen pond into an extended aeration process. Biolac® systems can be constructed in lined earthen basins or concrete basins. The existing earthen ponds are similar to the size of a typical Biolac® basin, and could easily be converted to a Biolac® system with a small amount of earthwork.

The Biolac®-R system is an extended aeration system with integral secondary clarifiers and recycle of solids. With this system, solids retention times (SRT), or sludge age is typically above 30 days. This allows for higher BOD and ammonia removal, as well as a stable sludge. Additionally, the Biolac® system can later be upgraded to allow for alternate nitrification and denitrification through minor modifications to the blower and diffuser system.[13] In addition, the Biolac® system utilizes floating aeration chains which can be sized to retrofit the existing lagoons.

[13] Biolac Wave-Oxidation© Parkson, 2009, *Biolac Wastewater Treatment System*

To accommodate a Biolac® system, the following pond characteristics are required:

- Pond size large enough to contain the Biolac aeration system
- Pond shallow enough to permit optimal aeration and operation

The optimal operational depth for the Biolac® system is 10-feet and providing additional 3-feet of freeboard to accommodate diurnal flow variation. At Guadalupe, the smallest pond, i.e. Pond No. 3 can be converted to a Biolac® pond for treatment of the design flows. Table 7 summarizes the dimensions required for the retrofitted pond to achieve the desired effluent levels.

Table 7 – Proposed Retrofitted Pond Size

Parameter	Value
Freeboard (ft)	3
Surface Length (ft)	185
Surface Width (ft)	180
Side-Slope Ratio	2:1
Side Water Depth (ft)	11
Bottom Length (ft)	152
Bottom Width (ft)	129
Volume (million gal.)	2.04
Number of Clarifiers	2
Clarifier Length (ft)	55
Clarifier Width (ft)	23

Two 60HP blowers are required with one additional blower provided for standby operations. During low flow periods, it will be possible to operate with only one blower. Table 8 shows the design criteria of the Biolac® system.

Table 8 – Biolac® Design Criteria

Parameter	Value[14]
F/M Ratio	0.05
Hydraulic Retention Time (days)	2.04
Design MLSS (mg/L)	2934
Design Sludge Retention Time (days)	60 to 70

While only one small pond will be converted to a Biolac® pond, the other three ponds will remain available for other uses. Small modifications in pipe work will be required. Figure 16 shows the preliminary layout of the Biolac® pond and details about the Biolac® equipment is presented in Appendix C.

Alternative 2 is preferred over Alternative 1 and recommended for the following reasons:

- Demonstrated ability of Biolac® to treat wastewater in several similar installations.
- Extended aeration lends a high solids retention time and sludge age.
- Less reliance on operator's knowledge and training in process design.

[14] Parkson Biolac-R Preliminary Budget Proposal

- Easy to convert the existing pond system to a Biolac® pond.
- Three other ponds made available for other use, including wastewater or effluent storage.

6.4 Sludge Treatment

The integral clarifiers of the Biolac®-R system is estimated to waste sludge at 1,750 lb/day with a concentration of 5,900 mg/L (0.59% dry solids). As mentioned in Section 4.1.4, the existing sludge handling facilities have not operated since 2004. The existing drying beds on the west end of the plant do not have sufficient area to dewater the waste activated sludge (WAS) produced, therefore additional sludge handling facilities will be required.

6.4.1 Alternative 1: Sludge Holding Ponds

In many plants, the waste activated sludge (WAS) from Biolac® clarifiers flows to a holding pond, which provides sludge storage for several years before needing to be pumped and hauled off site as Class B sludge. If this was adopted for this plant, the remaining three ponds could be converted into sludge holding ponds. These remaining AIPS ponds will reach storage capacity limit and require pumping and disposal once every 11 months. While an undisturbed water layer cap on top of the sludge is usually sufficient for retention of odors, there is a potential for odor release should the sludge get disturbed in any way. With residential units around the plant, using the existing AIPS ponds as sludge holding ponds would not be a recommended alternative.

6.4.2 Alternative 2: Sand Drying Beds

Sand Drying beds are the most commonly used sludge drying methods for small plants like Guadalupe. These beds consist of a sand layer (typically about one foot thick) and gravel layer, all of which lie on top of an under drainage system. Depths of the applied sludge are typically 8 to 12 inches. The majority of the dewatering occurs via the under drainage system, but also through evaporation and decanting. Given the low concentration of solids generated from the Biolac® clarifier, approximately 48,000 square feet (SF)[15] of sludge drying beds will be required. The existing sludge drying beds have an area of 9,600 SF and an additional 38,400 SF of sludge drying beds will need to be constructed. Figure 16 shows a possible layout for the sand sludge drying beds which includes the rehabilitation of the existing beds (from 1992 upgrade), and new beds installed in Pond 2.

The operation of these beds is simple and has no mechanical components. For this report, the sand drying beds have been used as the basis of preliminary cost estimate. The cost of these beds will be approximately $1,414,000. Given below are some other alternatives including a few proprietary systems that will be further evaluated during the preliminary design phase for applicability and cost savings. It may be possible that these systems can be built at a lower cost and also be operationally friendly.

[15] Based on an assumed loading rate of 16lbs/ft^2·yr, Metcalf & Eddy, 4th ed., pg 1572, table 14-44

6.4.3 Alternative 3: Paved Drying Beds

The advantages of paved drying beds lie in the ability to use heavy equipment to regularly mix and remove sludge without disturbing or periodically needing to replace an underlying layer of sand. The mixing and aeration allows for enhanced evaporation by tearing up the surface crust and allowing more surface area contact with the air. Paved drying beds can incorporate draw-off pipes for decanting supernatant and under drainage systems with permeable drainage sections (such as around the perimeter or down the middle). Depending on evaporation and precipitation rates, these types of drying beds will require more area than sand drying beds. In arid climates, solids concentrations of 40% to 50% can be obtained within 30 to 40 days.[16] However, this region's evaporation rate of 3.64 ft/yr[17] and is not sufficient for paved drying beds to efficiently dewater the sludge, and thus would require too large of an area (approximately 358,000 square feet), which in turn would make this alternative costlier than the sand drying beds.

6.4.4 Alternative 4: Mechanical Dewatering Equipment

Mechanical sludge dewatering equipment typically used for sludge dewatering includes belt filter press, centrifuge, chamber press, and metal screen inclined screw presses. Mechanical dewatering equipment is typically used in large plants processing significant amounts of sludge. These may not be desirable for this plant due to complicated operation and maintenance procedures. Huber Technology, Inc. has a small screw press design that may be applicable for this plant and could be constructed at a lower cost than sand sludge drying beds. A brochure of this equipment is included in Appendix D and the applicability of this equipment will be further evaluated in the preliminary design phase.

6.4.5 Alternative 5: Vacuum Assisted Drying Beds

Typical vacuum-assisted sludge drying beds utilize rigid porous media plates placed on top of a drainage layer, which is connected to a vacuum chamber. A polymer is generally added during the loading of sludge to increase dewatering performance. After sludge application, water is first allowed to drain by gravity through the sludge mass and into the vacuum chamber. Once the sludge becomes relatively dense, the vacuum pump is started and runs until the sludge mat forms cracks, indicating approximately 80% removal of free water. Air drying continues until removal is desired. Once the sludge cake is removed, the porous plates are hose-washed to eliminate cake residue. Filtrate is pumped back to the headworks using a submersible pump located in the vacuum chamber.[18] These drying beds however can only accept sludge with concentration greater than 1.5%. Hence, to apply this technology, an aerobic sludge holding tank with separate decanter and sludge withdrawal equipment will be required. While the capital costs for this alternative may be less than the sand drying beds, this system may require higher operation and maintenance. This alternative will also be further evaluated during the

[16] EPA, 1987, R-030 *Innovations in Sludge Drying Beds*

[17] University of California – Integrated Pest Management Program Online, *Weather Data and Products*

[18] EPA, 1984, *An Emerging Technology: Vacuum-Assisted Sludge Dewatering Beds*

preliminary design phase. Appendix D shows information from U.S. Environmental Products Inc., one of the vendors for this technology.

6.4.6 Alternative 6: Quick Dry® Filter Beds

The Quick Dry® filter bed system is essentially a sand drying bed with modifications. The process incorporates a flocculation system, in-line polymer preparation device, drainage layer of sand, gravel, and honeycomb grid on top of under drain pipes, and a self-contained harvesting unit. Prior to application, the sludge is flocculated in the RapidFloc® mixer and injected with polymer while the filter bed is presaturated with water to purge all air from the drainage system. Once the sludge is applied, the under drain outlet valve is opened. As water in the filter bed drains by gravity, a vacuum or siphoning effect is created in the filter bed which greatly enhances the dewatering performance. The self-contained harvesting unit efficiently removes the dried sludge with minimal loss of the sand layer.[19] Appendix D shows information from FD Deskins Co. Inc., one of the vendors for this technology.

6.4.7 Sludge Haul-off

Periodically, the dried biosolids stockpile will require to be hauled to an appropriate disposal site such as a landfill or composting facility. Engle & Gray have assisted the City with sludge disposal in the past and should be contacted for further development of this option.

6.5 Effluent Pipeline and Holding Ponds

To reduce potential health hazards and maintenance of the unlined earthen ditch which transports the effluent to the holding ponds, this project proposes to replace the ditch with an underground pipeline. This will ensure that the secondary effluent is protected from post treatment contamination and is only discharged at the 71 acre pasture field as designated in the WDR.

Pipeline alignment will be designed to be non-invasive to the existing pasture field between the WWTP and holding ponds. Following the existing ditch alignment would require approximately 3,000 feet of pipe. If the alignment follows northern boundaries of the pasture field, approximately 2,200 feet of pipe would be required. The land is privately owned and the City is only limited to using the easement it has been provided. Since significant restoration is required along the current ditch alignment, for this report it is assumed that the new pipeline alignment will also be along the existing alignment. It is recommended that welded HDPE or PVC sewer pipe be used along this alignment.

The height of the levees may need to be reshaped to the original design. In some instances the current levee height will have to be increased for the ponds to keep flood waters from entering the holding ponds. Erosion of the roadway along Pond C will need to be fixed as a part of this project. During preliminary design, the amount of earthwork will be quantified.

[19] EPA, 2006, 832-R-06-005, *Emerging Technologies for Biosolids Management*

The equalization pipe connecting Pond B and C requires replacement. A new pipe and gate valve is recommended. The failing sluice gate connecting Ponds A and B should also be replaced to re-establish functionality.

6.6 Irrigation Pump Station

The irrigation pump station and filters will require an upgrade to improve their effectiveness. Depending on the design of the spray irrigation system, the pumps may require changing. One alternative would be to replace the remaining original pump to match the two existing 60HP submersible centrifugal pumps. If the spray irrigation system design requires a higher capacity pumps, all three pumps will require replacement. The latter scenario has been assumed in this report.

It is proposed that new pump controls, VFDs (if required), sensors, and alarm system be provided for the irrigation pump station. All these electrical units also need to be housed in a new building with adequate dust control and ventilation. New filters will be installed on the pump station effluent lines and new fencing constructed around the pump station to eliminate access of roaming cattle to the pump station. New alarm system with telemetry will need to be installed.

6.7 Spray Distribution System

Per the WDR, effluent cannot be disposed of when standing water is present. A new spray distribution system will need to be designed to do the following:

- Withstand damage from cattle grazing
- Effectively distribute the effluent at the desired flow rate
- Prevent standing water
- Decrease maintenance and the need to move the equipment daily
- Minimize potential contact of effluent to operators

The 71 acre pasture is primarily comprised of sandy silt,[20] which has a high infiltration rate. In the absence of current geotechnical data, a conservative infiltration rate of ¼ in/hr has been assumed at this time. The spray distribution system will be designed to discharge up to 0.96 million gallons within a 6 hour time period each day. To prevent standing water, a minimum spray area of 24 acres is required. Two alternatives have been considered to dispose the effluent effectively.

6.7.1 Alternative 1: Moveable System

Moveable irrigation systems can better distribute the effluent, while minimizing the required amount of sprayers. Movable systems either incorporate mechanical mechanisms or require operators to physically move the spray system. Although these systems have the potential for

[20] USDA Natural Resource Conservation Service, *Web Soil Surveys*

reducing the amount of required spray heads and piping, they will greatly increase system operation and maintenance and exposure of the operators to secondary effluent. Hence this option is not recommended.

6.7.2 Alternative 2: Underground System

To distribute the water properly, approximately 12 underground laterals will branch off the existing force main. A total of 30 to 40 sprinklers with spray radii of approximately 100-feet will be installed along the laterals. Placing the laterals underground will allow the use of lower cost HDPE or PVC pipe without the risk of damage to the pipeline by cattle. To prevent damage to the sprinklers and risers from cattle grazing, three steel bollards will be placed around each sprinkler head. Figure 17 shows the proposed layout of the irrigation system.

6.8 Site Services

Adequate sewer and water pipelines will be provided at the plant. The current sewer line shall be extended to service all new facilities constructed at the plant. The plant is currently serviced by an on-site well. However there is City's water distribution system available near the plant. In the project, a new water line will be installed around the treatment plant, connected to the City's distribution system; with wash-down hose points installed at key locations.

During the preliminary design phase, existing power, required power and standby power requirements will be analyzed and scope of work developed for electrical portion of the project. Instrumentation and telemetry requirements shall also be analyzed with particular attention to monitoring and control of process and equipment. Discussions with Pacific Gas and Electric have been initiated to potentially reduce demands during peak hours.

The facility currently is within a fence and has a locked gate. During preliminary design, security issues shall be analyzed including security lighting and alarms.

The plant site has several abandoned structural and mechanical elements from past upgrades and in this project it is proposed that all those unused structures be demolished and the plant site restored to an easily accessible and functional site. There is also a significant amount of trash and debris that has accumulated.

Access to the plant is via a road off West Main Street. This road needs to be paved along with access roads within the plant to facilitate the easy movement of grit removal and sludge hauling trucks. The proposed site plan is intended to maintain drivable access to all process areas. Sludge hauling facilities are designed to allow for ease of sludge container loading and removal.

7 RECOMMENDATIONS

7.1 Proposed Project

As identified in the analysis above, the proposed scope of work for the project is summarized in Table 9 and shown in Figure 18. The detailed cost estimate and preliminary system Process and Instrumentation Diagrams (P&IDs) are presented in Appendices E and F respectively.

Table 9 – Summary of Proposed Project

SCOPE OF WORK	CAPITAL COST
Headworks (Described in Sections 4.1.1 and 6.1)	
Replace the comminutor with one mechanically cleaned bar screen, and a washer/compactor system, retain the manual bar rack Replace submersible pumps Valves and meter replacement, painting of manifold, new pump crane New VFD, air conditioning, dust control and enclosure	$ 474,000
Grit System (Described in Sections 4.1.2 and 6.2)	
New rotating propeller drive motor and shaft extended down to the bottom sump with grit fluidizer vanes Installation of a top mounted Turbo Pista® Grit Pump Installation of a suction line, which extends down inside the drive tube to the storage hopper bottom Replacement and relocation of the grit screw conveyor to west end of grit chamber and close to the grit pump New grit piping and valves, painting of all pipe work	$223,000
Ponds (Described in Sections 4.1.3 and 6.3)	
Install new Biolac® diffusers in Pond No. 3, install new integral clarifiers Install new blowers and building, install all necessary pipe work	$1,389,000
Sludge Handling (Described in Sections 4.1.4 and 6.4)	
Restore existing sludge drying beds (9,600 SF) Build new 38,400SF sludge drying beds	$1,414,000
Effluent Pipe and Holding Ponds (Described in Sections 4.1.5, and 6.5)	
Install piping system to directly connect plant effluent to storage ponds Restore the eroded holding ponds Rehabilitate the equalization between three holding ponds	$895,000
Irrigation Pump Station (described in Sections 4.1.6 and 6.6)	
Replace remaining three submersible pumps, new filters New Electrical building and equipment, telemetry to plant New pump crane, New fencing around pump station	$263,000
Spray Distribution System (Described in Sections 4.1.7 and 6.7)	
Aeration of pasture, New Sprinkler system New underground laterals and isolation valves	$425,000
Site Services (described in Section 6.8)	
Sewer and Water, Demolition, Electrical and Instrumentation, Security, Road	$1,527,000

SCOPE OF WORK	CAPITAL COST
Dredging (Described in Section 7.2.2)	$750,000
TOTAL PROJECT COST[21]	$7,728,000

The above mentioned project cost estimate is in excess of the previously anticipated project costs and current available grant funding. This estimate is based on a thorough investigation and needs assessment of the plant and has revealed a more detailed scope of work as described Table 9. During the preliminary design phase, the project will be further defined and the cost estimates refined.

However, to meet the available grant funding and to ensure WDR compliance by 2012, a reduced scope project is proposed for the near term as presented in Table 10. It is recommended that additional funding sources be reviewed to facilitate the design and construction of the entire project as described in Table 9.

Table 10 – Summary of Near Term Project

SCOPE OF WORK	CAPITAL COST
Headworks (Described in Sections 4.1.1 and 6.1)	
Replace the comminutor with one mechanically cleaned bar screen, and a washer/compactor system, retain the manual bar rack Replace submersible pumps Valves and meter replacement, painting of manifold, new pump crane New VFD, air conditioning, dust control and enclosure	$ 474,000
Ponds (Described in Sections 4.1.3 and 6.3)	
Install new Biolac® diffusers in Pond No. 3, install new integral clarifiers Install new blowers and building, install all necessary pipe work	$1,389,000
Sludge Handling (Described in Sections 4.1.4 and 6.4)	
An alternative sludge handling facility, e.g. mechanical screw press, or, QuickDry® beds. These new technologies may cost less than the conventional sludge drying beds. (Refer Section 7.2.3.	$707,000
Site Services (described in Section 6.8)	
Gravel road within site only, one additional sewer manhole only, extension of current water system with two additional hose stations only, no security or demolition of existing facilities.	$520,000
Dredging (Described in Section 7.2.2)	$750,000
TOTAL PROJECT COST[22]	$4,032,000

[21] Includes 5% for Mobilization and Demobilization.
[22] Includes 5% for Mobilization and Demobilization.

7.2 Issues for Further Consideration

7.2.1 Sequence of Construction

While the new plant is being constructed, the existing plant is required to be operational and producing effluent in compliance with the WDR. During the Preliminary Design Phase, a detailed sequence of construction will be developed which may incorporate the following:

- Rehabilitating the existing sludge drying beds at first.
- Dredging one pond at a time and processing the sludge. This will increase the treatment capacity of the existing ponds. City staff has already initiated this process.
- Renting a temporary dewatering unit (e.g. screw press, or belt press) and applying the dewatered sludge to the drying beds for further drying.
- Possibly dosing ferric chloride or alum or other coagulant at the influent pump station. This can be done by renting a chemical dosing unit temporarily. Coagulant dosing can help in removal of BOD and TSS while the plant is in construction. It is not advised as a long term treatment strategy.
- Take Pond 3 out of service converting into Biolac®. Put into service.
- Take Pond 2 out of service and convert into sludge drying beds. Put into service.
- Build all other facilities – headworks improvement, grit system, site services, etc.

7.2.2 Dredging and Disposal of Sludge from Existing Ponds

Dredging of sludge from the existing ponds is a key concern due to the volume of sludge accumulated, the concentration, the condition, and the potential of odor release. Certified dredging contractors will be hired to dredge the ponds. The sludge produced is municipal solids and therefore need to be disposed per 40 CFR 503. Possible opportunities for disposal are nearby treatment plants for further stabilization and disposal. If the sludge is treated to Class A or B and approximately 20% dry solids, the sludge can be disposed to the local composting facilities. This issue will be further studied during the Preliminary Design Phase.

7.2.3 Long Term Sludge Dewatering Strategy

As evident in Section 6.4, the cost of implementing sludge drying beds is high. Other emerging and innovative dewatering technologies will be evaluated in detail during the Preliminary Design Phase to assess the applicability to the project. If potential capital cost savings (potentially half of the current estimate) and ease of operation and maintenance is identified, these alternative dewatering technologies will be proposed in lieu of the conventional sludge drying beds.

7.2.4 Lease Agreements with Adjacent Property Owners

The land owned by the City is limited to the property on which the treatment plant exists. The effluent is currently transported, stored and disposed on property leased from local land owners. Since this project entails significant construction on the leased land, the City may need

to review with the City Attorney to ascertain what the City can and cannot do without first modifying the existing agreement.

7.2.5 Electrical Design Enhancements

During the Preliminary Design Phase, the need for upgrade of the electrical system will be evaluated in depth. Avenues to limit the need for an electrical upgrade will be evaluated, including the following:

- Depending on the mode of operation of the irrigation pumps, e.g. start-stop with a lag and lead configuration, there is a chance of eliminating the VFDs at that facility altogether.
- While the combined load of the Biolac® blowers are slightly higher than the combined load of the current mechanical aerators, the possibility of reducing the electrical load at other facilities will be reviewed.
- Operation of the influent pump without a VFD will be investigated.
- Projected power costs will be analyzed and compared to existing costs

7.2.6 Holding Pond Redesign to Alleviate Danger during Flooding

The current holding ponds are in the 100-year flood plain and have been, in the past, subject to flooding. While the scope of the project is to restore these ponds to their original design levels and shapes, the possibility of raising the levees to prevent flooding can be investigated. However, this may trigger several permitting issues with the jurisdictional and resource agencies monitoring and responsible for the Santa Maria River.

7.2.7 Permitting

The proposed project is unique in that its various components fall within the permitting jurisdiction of the City, the County of Santa Barbara, the County of San Luis Obispo, and the California Coastal Commission, depending on the parcel of land on which construction is proposed. The project is subject to CEQA review and it is predicted that the project will utilize a Mitigated Negative Declaration (MND) process. The City will utilize the expertise of its contract planning consultant to process the permitting of the project. As the project description is developed, it will be important to forecast the impact that certain elements may have on the permit process timeline. If excess permitting time is predicted, the project description should be modified accordingly. Funding from Proposition 50 is scheduled to end in early 2012. All construction funded by this program needs to be completed by the end of 2011 to guarantee eligibility.

7.3 Provisions for Future Capacity and Tertiary Treatment/Water Reuse Upgrades

The proposed plant is being designed to treat wastewater to the current WDR stipulations. To achieve water for reuse (as described in Section 3.4), the plant will require upgrade to tertiary treatment, followed by disinfection processes. The plant upgrades would involve the following:

- Another Biolac plant similar to the proposed design (as shown in Figure 16). This will also enable the plant to expand capacity if required in the future.
- Change of operation of the Biolac to alternate aeration to achieve alternate anoxic and oxic zones to enable tertiary treatment and production of higher quality effluent as described in Section 3.4.
- Effluent could then be filtered through an acceptable Title 22-approved filtration technology such as a granular media filtration, or a cloth filter; and then disinfected through an ultraviolet (UV) light or chlorine system to meet required pathogen inactivation.

Adding the capability to treat effluent to higher levels of disinfection will allow greater flexibility in effluent disposal. It is anticipated that the current effluent disposal method will continue in the future for fail-safe disposal.

In addition to the current irrigated pasture spray field, future water reuse customers could include:

- Playground adjacent to the plant site.
- Service to the current and future home sites in the City and the landscaped areas that come with new development.
- Wetlands rejuvenation around the City.
- Irrigation water for other agricultural lands around the City.
- Other pasture irrigation sites in the City and County.

Specific water reuse opportunities will need to be determined by a market study, with particular focus on salinity, hardness, permeability, nutrients, heavy metals, and affordability.

FIGURES

Figure 1 – Vicinity Map
Figure 2 – Existing Process Flow Diagram
Figure 3 – Condition of Headworks
Figure 4 – Condition of Grit Removal System
Figure 5 – Condition of AIPS
Figure 6 – Condition of Sludge Handling Facilities
Figure 7 – Condition of Effluent Ditch and Holding Ponds
Figure 8 – Condition of Irrigation Pump Station
Figure 9 – Condition of Spray Irrigation System
Figure 10 – Last Five Years Monthly Average Daily Flow
Figure 11 – TSS in the Plant Influent and Effluent
Figure 12 – Trend in BOD in the Plant Influent and Effluent
Figure 13 – Analysis of Settleable Solids in the Plant Influent and Effluent
Figure 14 – pH Levels in the Influent and Effluent
Figure 15 – TDS, Sodium, and Chloride in the Plant Effluent
Figure 16 – Preliminary Layout of the Biolac® Pond
Figure 17 – Proposed Layout of the Irrigation System
Figure 18 – Proposed Scope of Work

Figure 1 – Vicinity Map

DUDEK

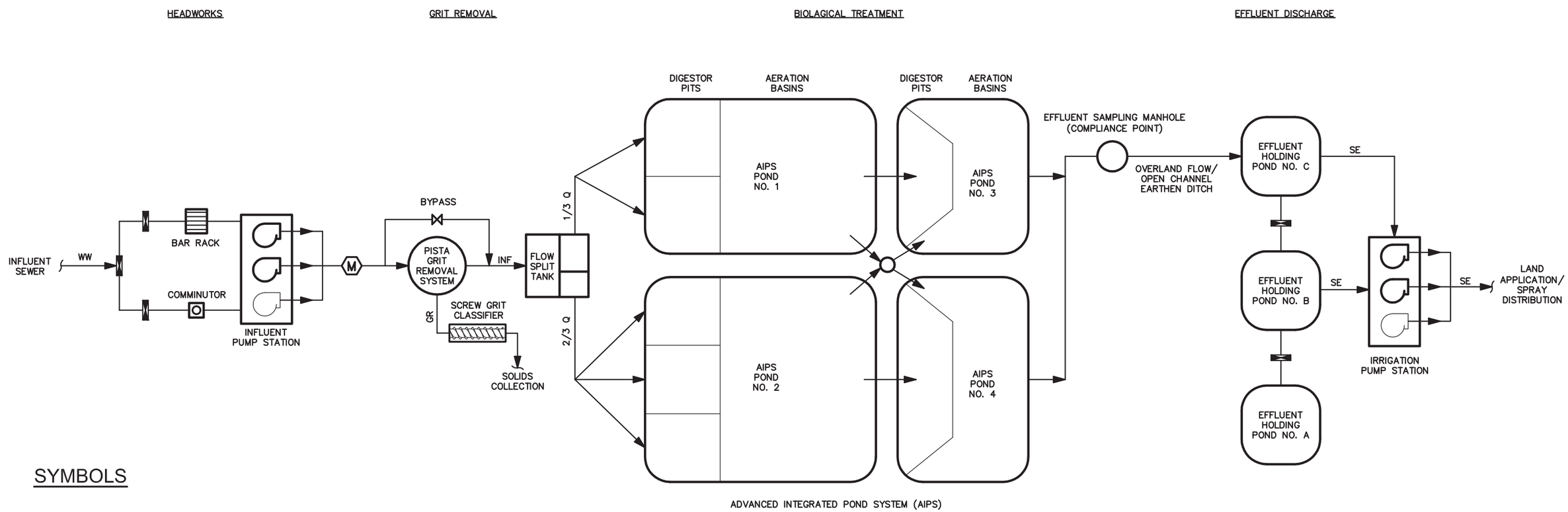

SYMBOLS

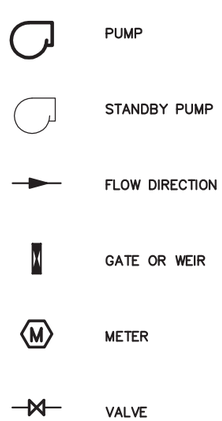

FIGURE 2

EXISTING PROCESS FLOW DIAGRAM

NOT TO SCALE

DUDEK

4/30/2010 4:33:37 PM P:\101.Engineering\Guadalupe, City of\6576-Wastewater Treatment Plant\06 Design Data\CAD6576\dwg\6576 PFD-existing

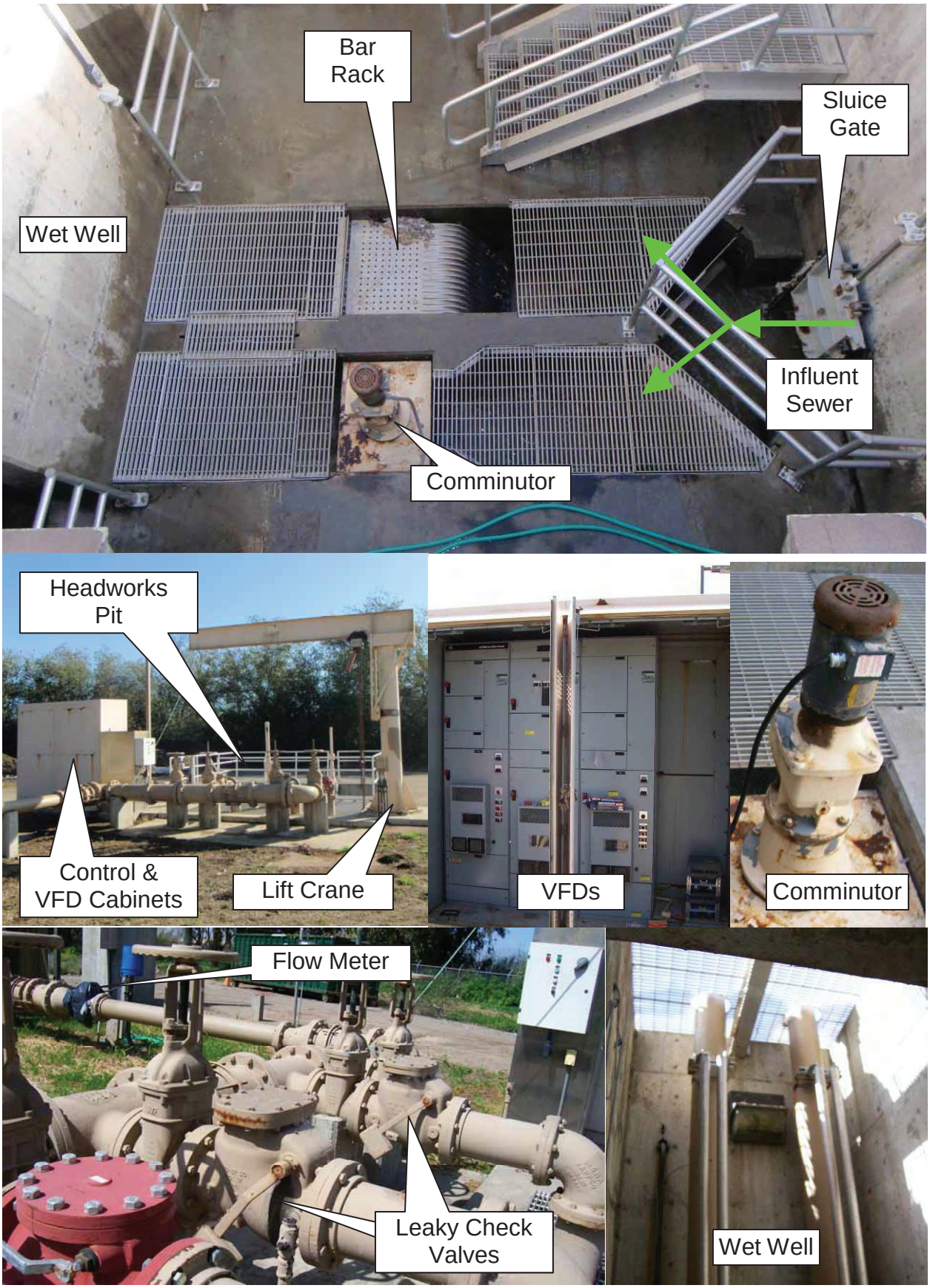

Figure 3 – Condition of Headworks

DUDEK

Figure 4 – Condition of Grit Removal System

DUDEK

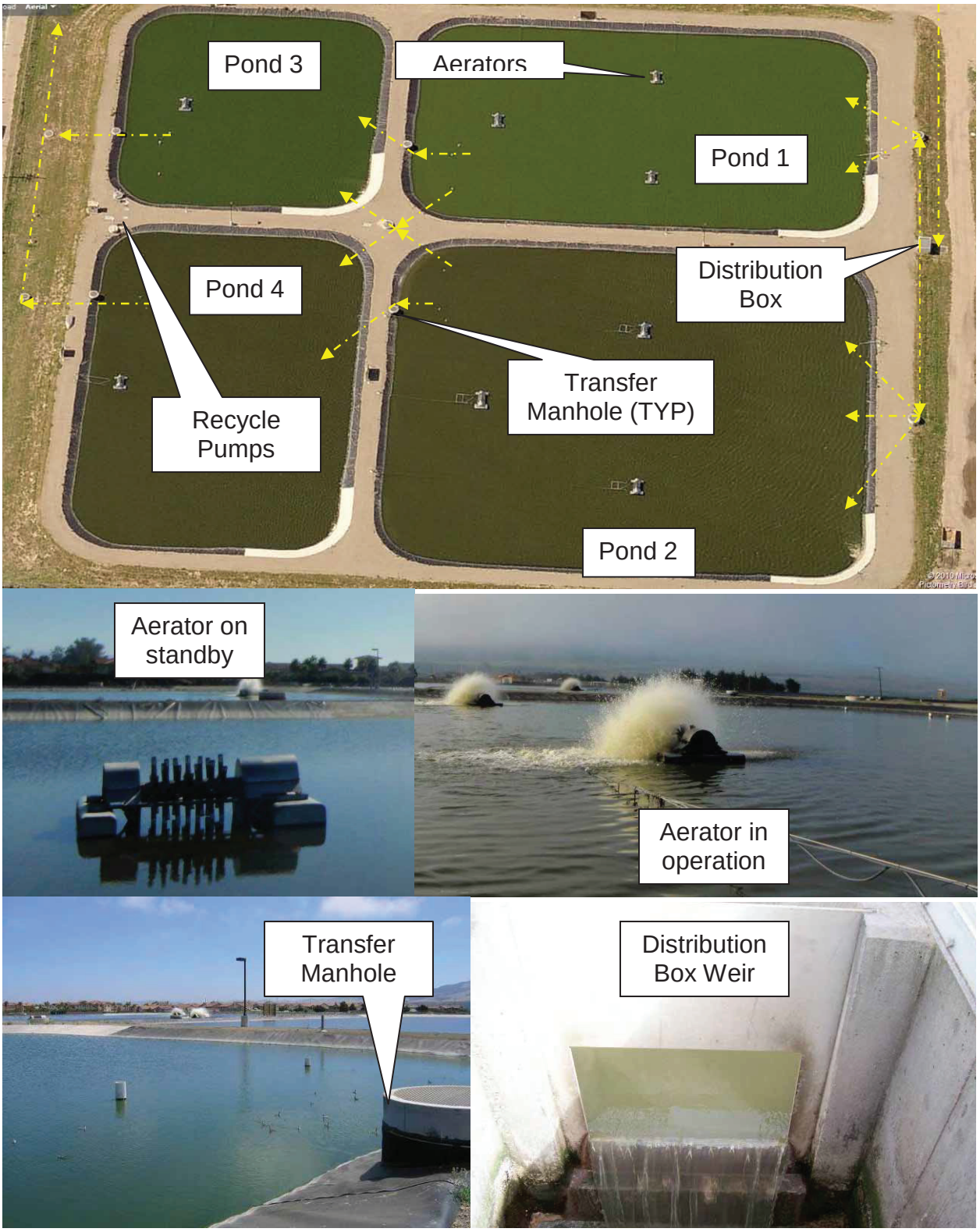

Figure 5 – Condition of AIPS

Figure 6 – Condition of Sludge Handling Facilities

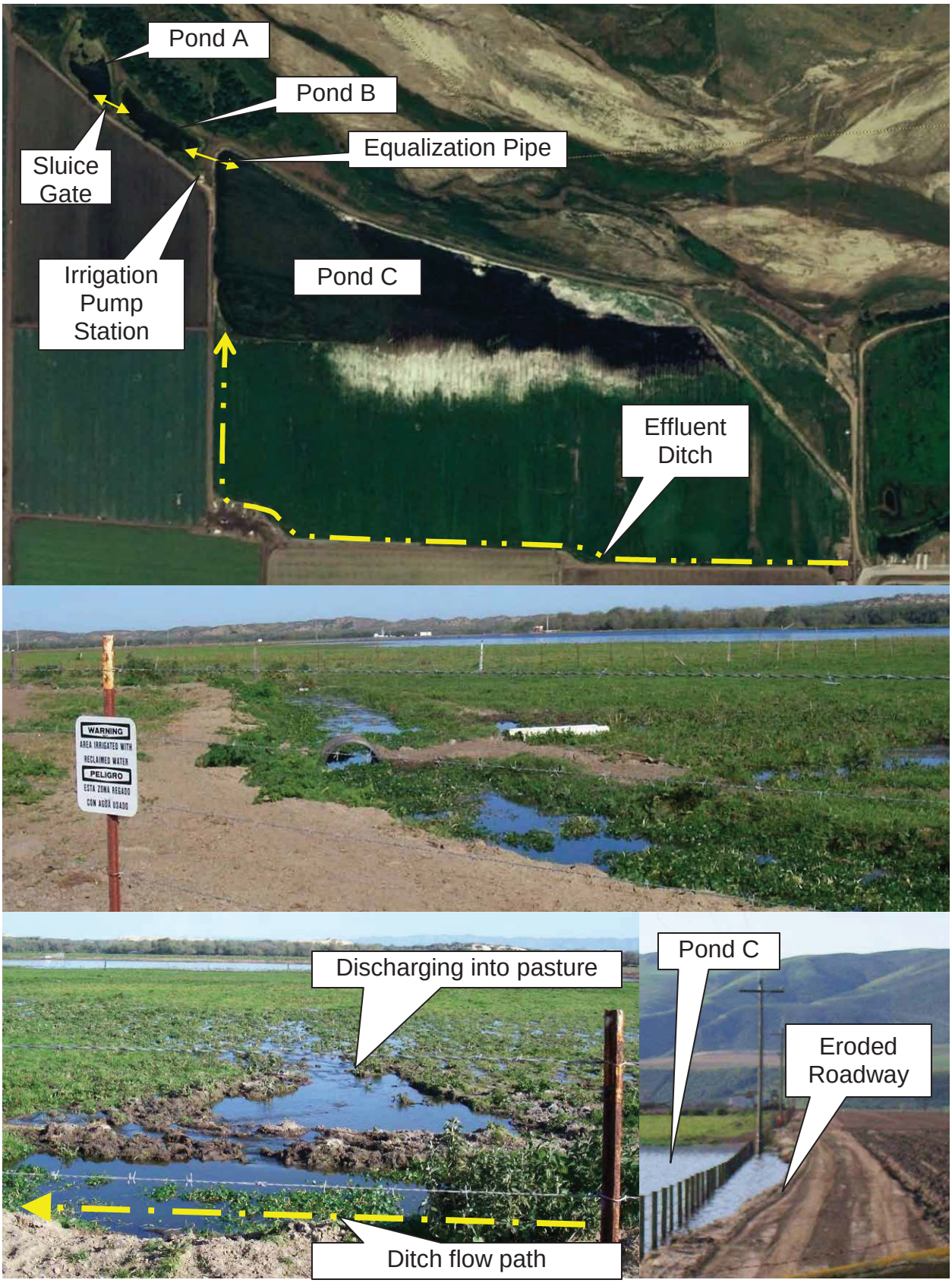

Figure 7 – Condition of Effluent Ditch and Holding Ponds

DUDEK

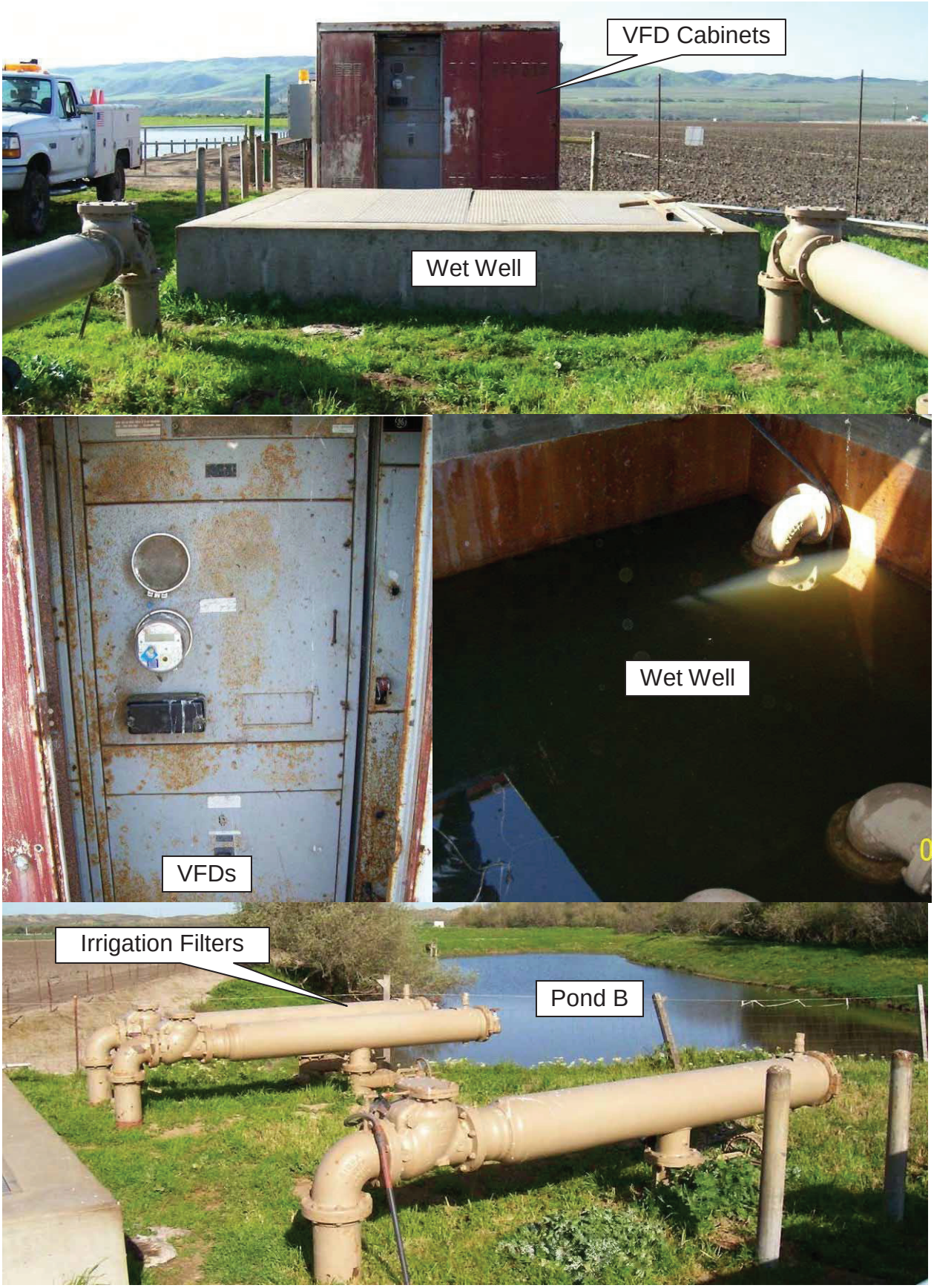

Figure 8 – Condition of Irrigation Pump Station

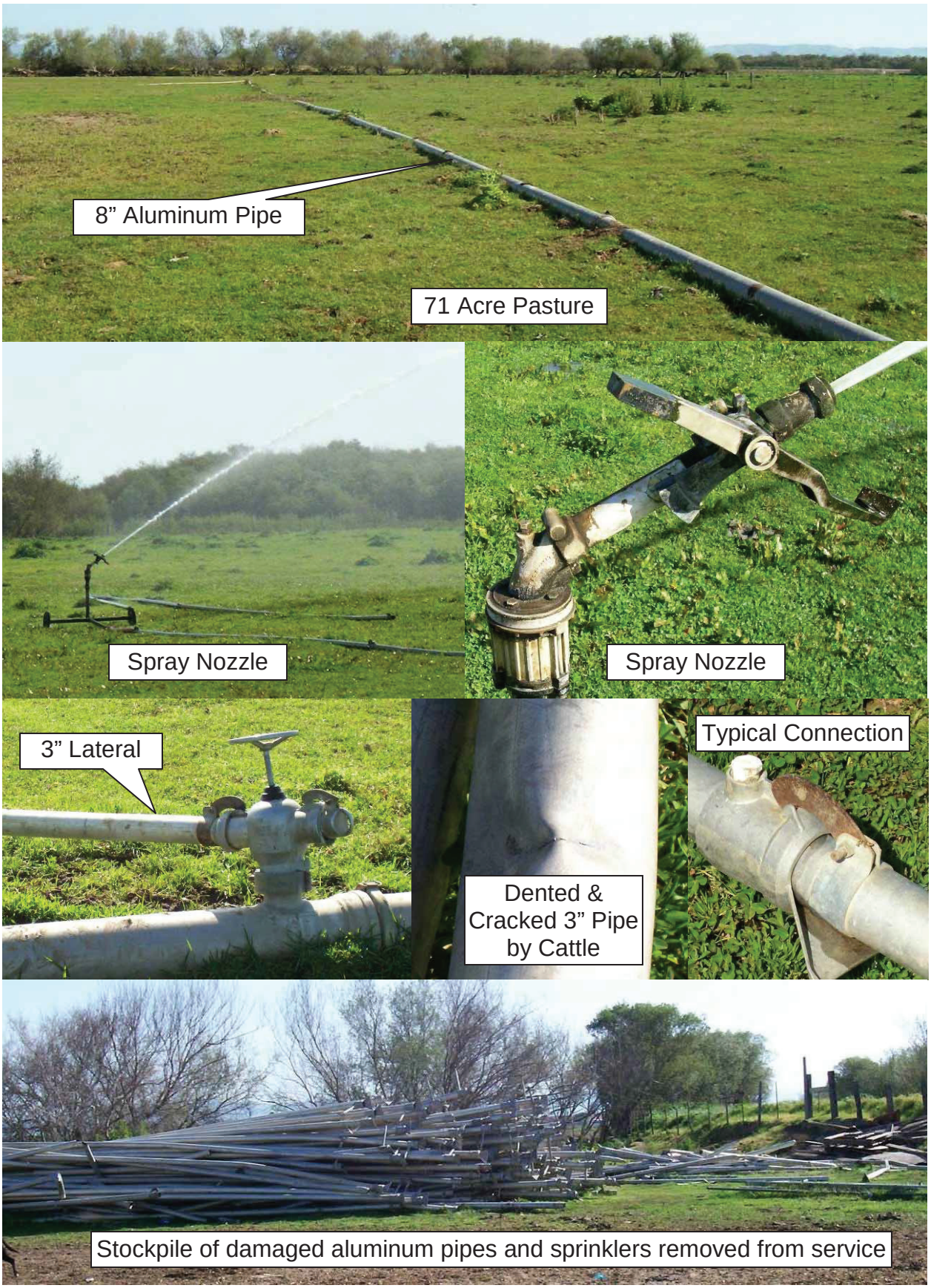

Figure 9 – Condition of Spray Irrigation System

DUDEK

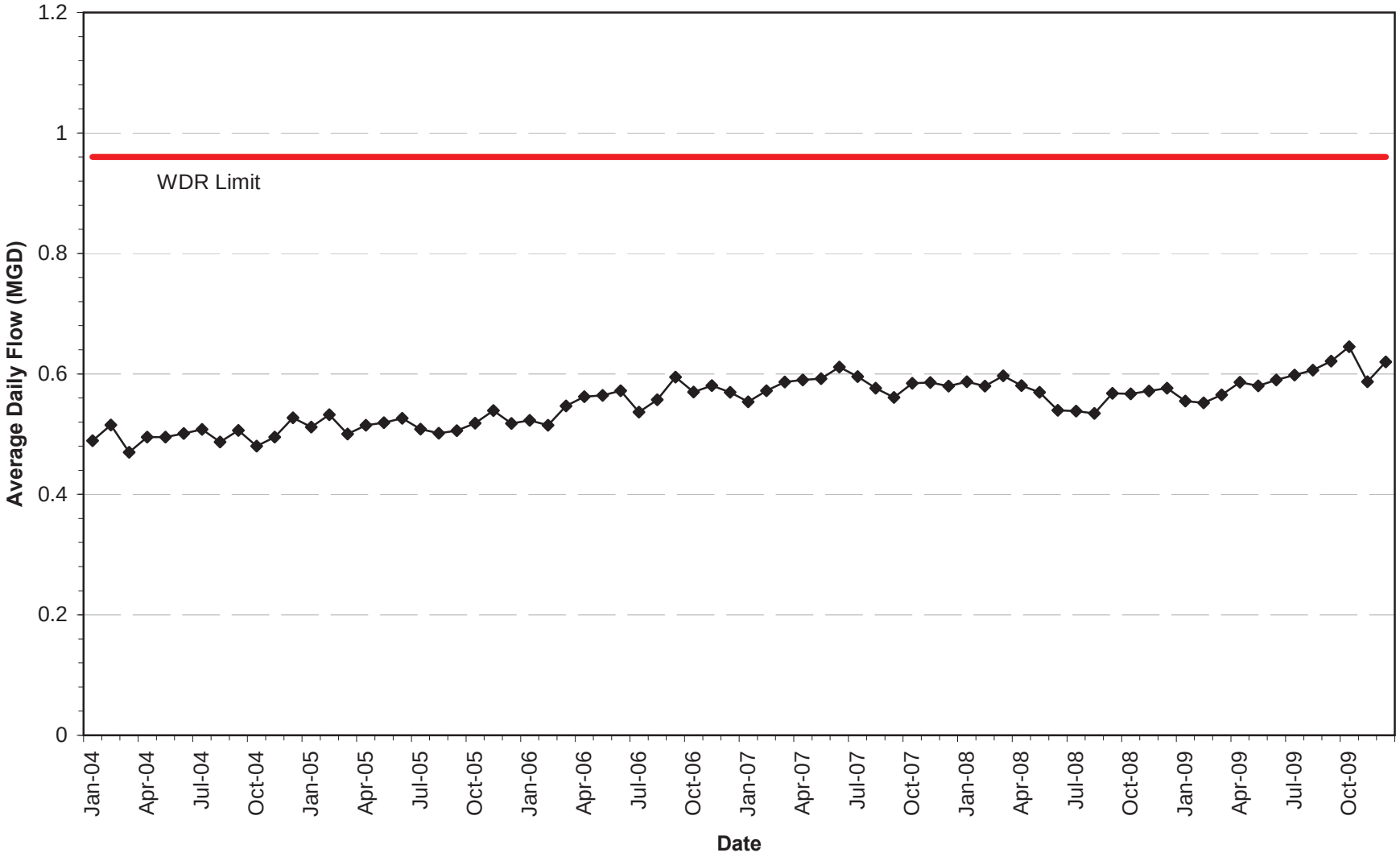

Figure 10 - Monthly Average Daily Flow

DUDEK

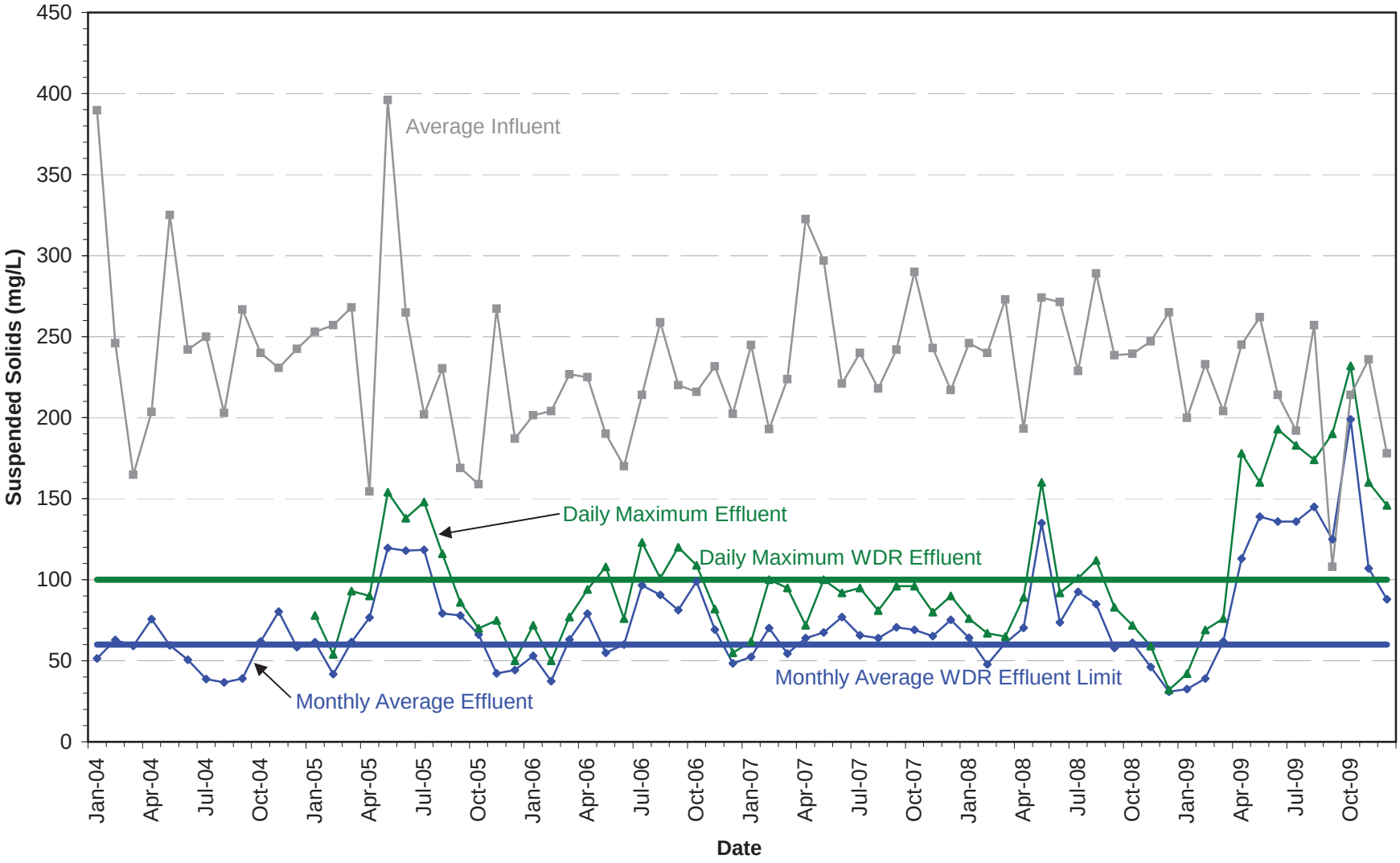

Figure 11 - TSS in the Plant Influent and Effluent

DUDEK

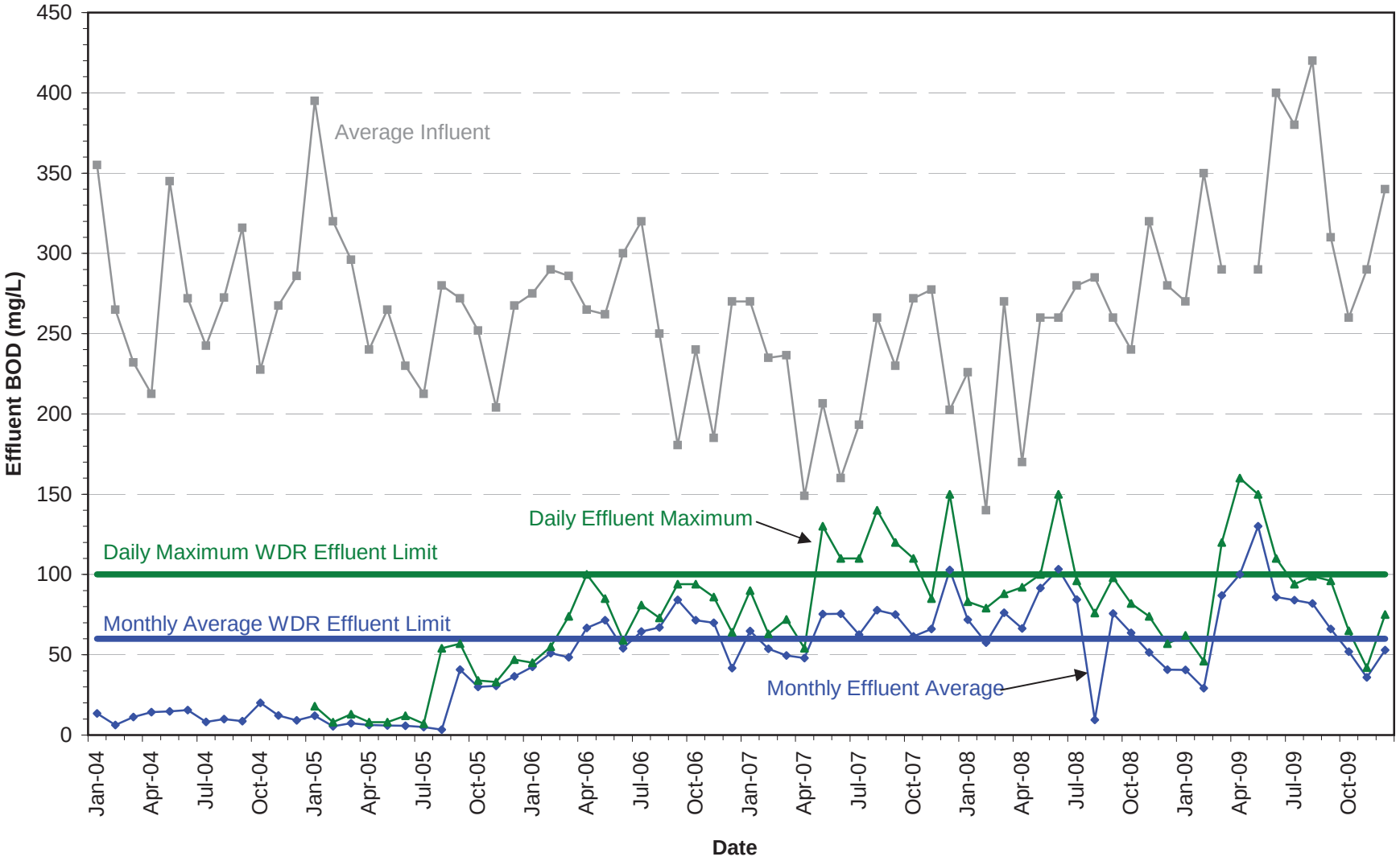

Figure 12 - BOD in the Plant Influent and Effluent

DUDEK

Figure 13 - Settleable Solids in the Plant Influent and Effluent

DUDEK

Figure 14 - pH Levels in the Influent and Effluent

DUDEK

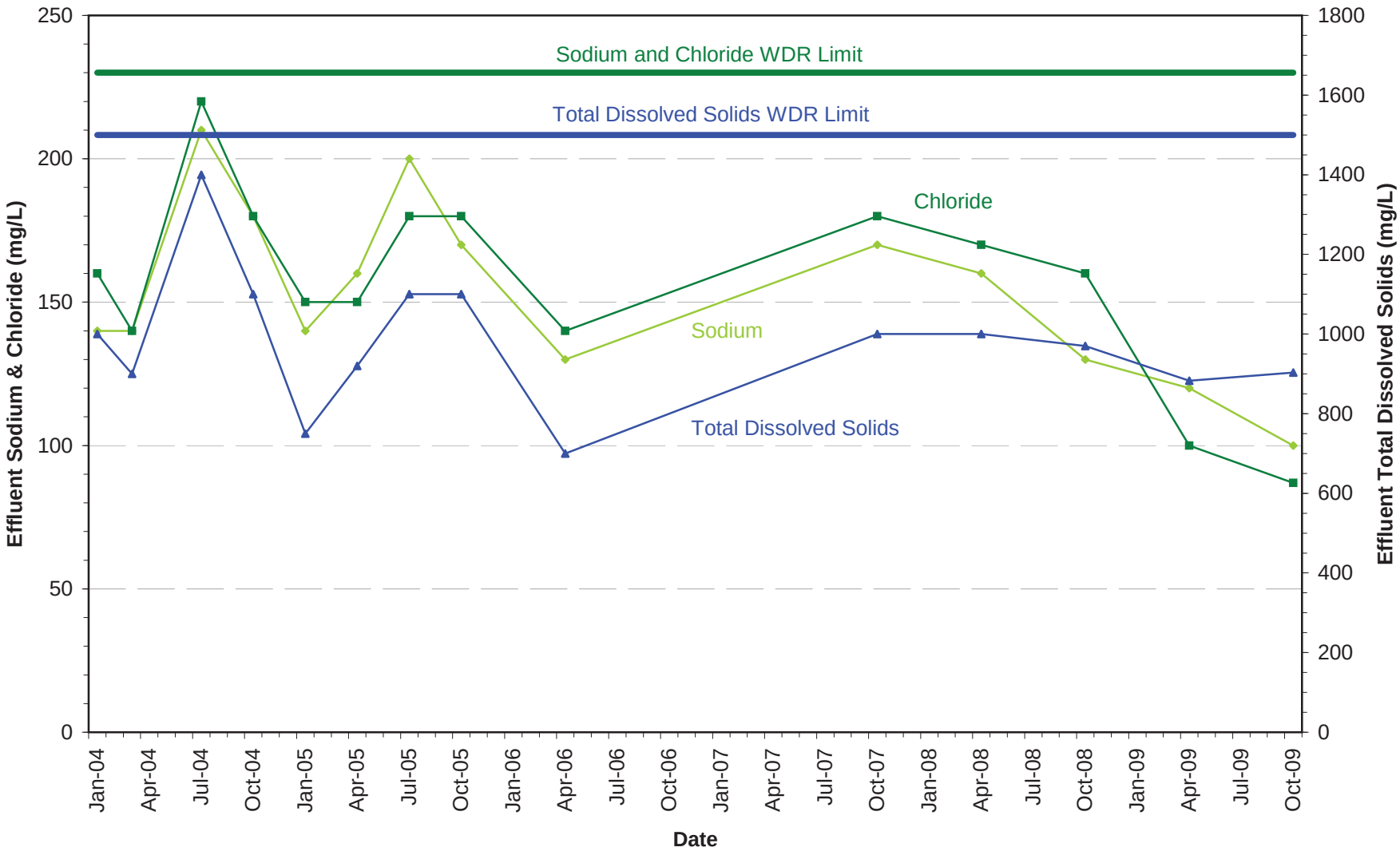

Figure 15 - TDS, Sodium, and Chloride in the Plant Effluent

DUDEK

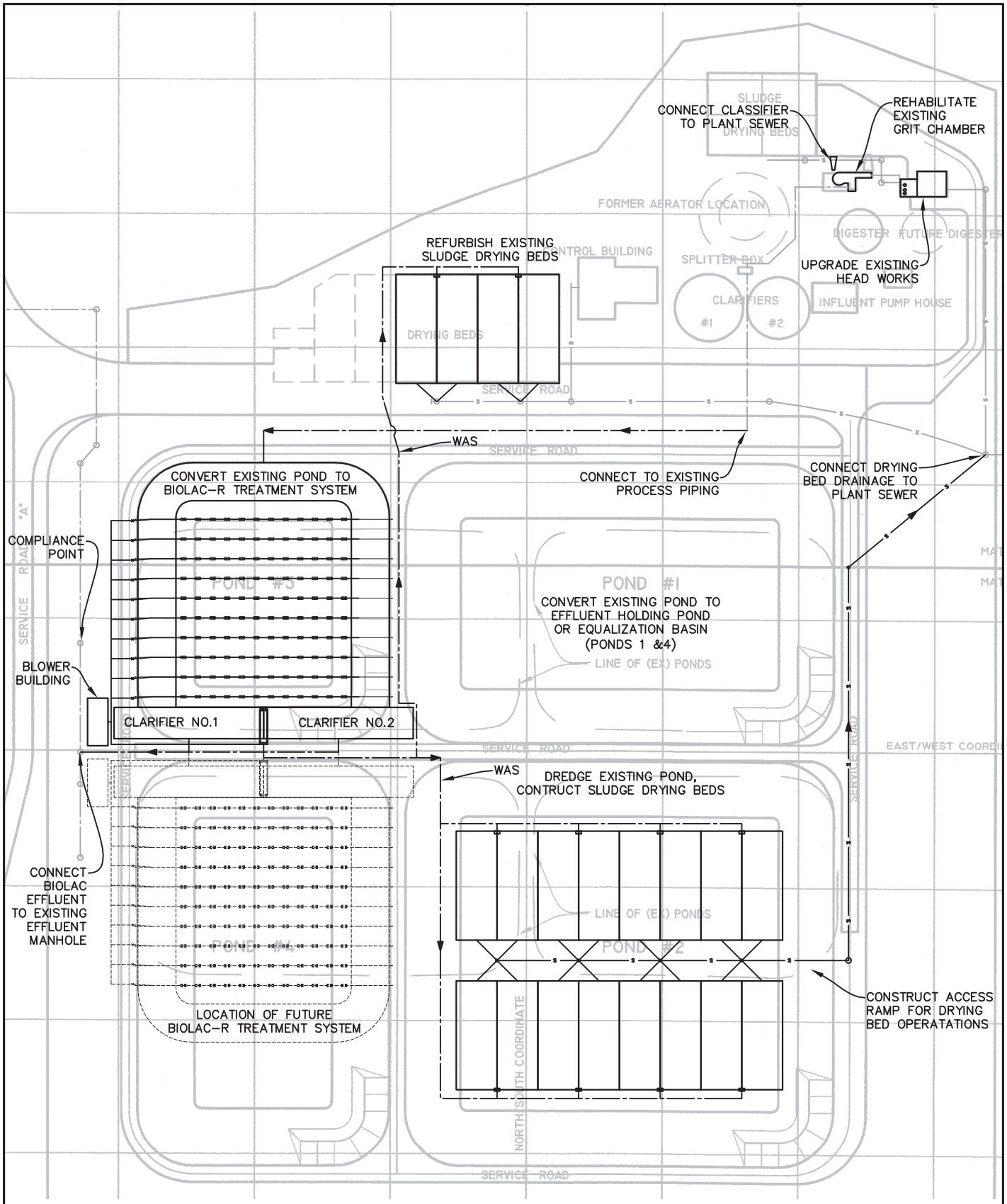

FIGURE 16

PRELIMINARY SITE LAYOUT

SCALE: 1" = 100'

DUDEK

P:\101.Engineering\Guadalupe, City of\6576-Wastewater Treatment Plant\06 Design Data\CAD6576\dwg\6576 Plant Layout - TM1_recover 4/20/2010 3:59 PM

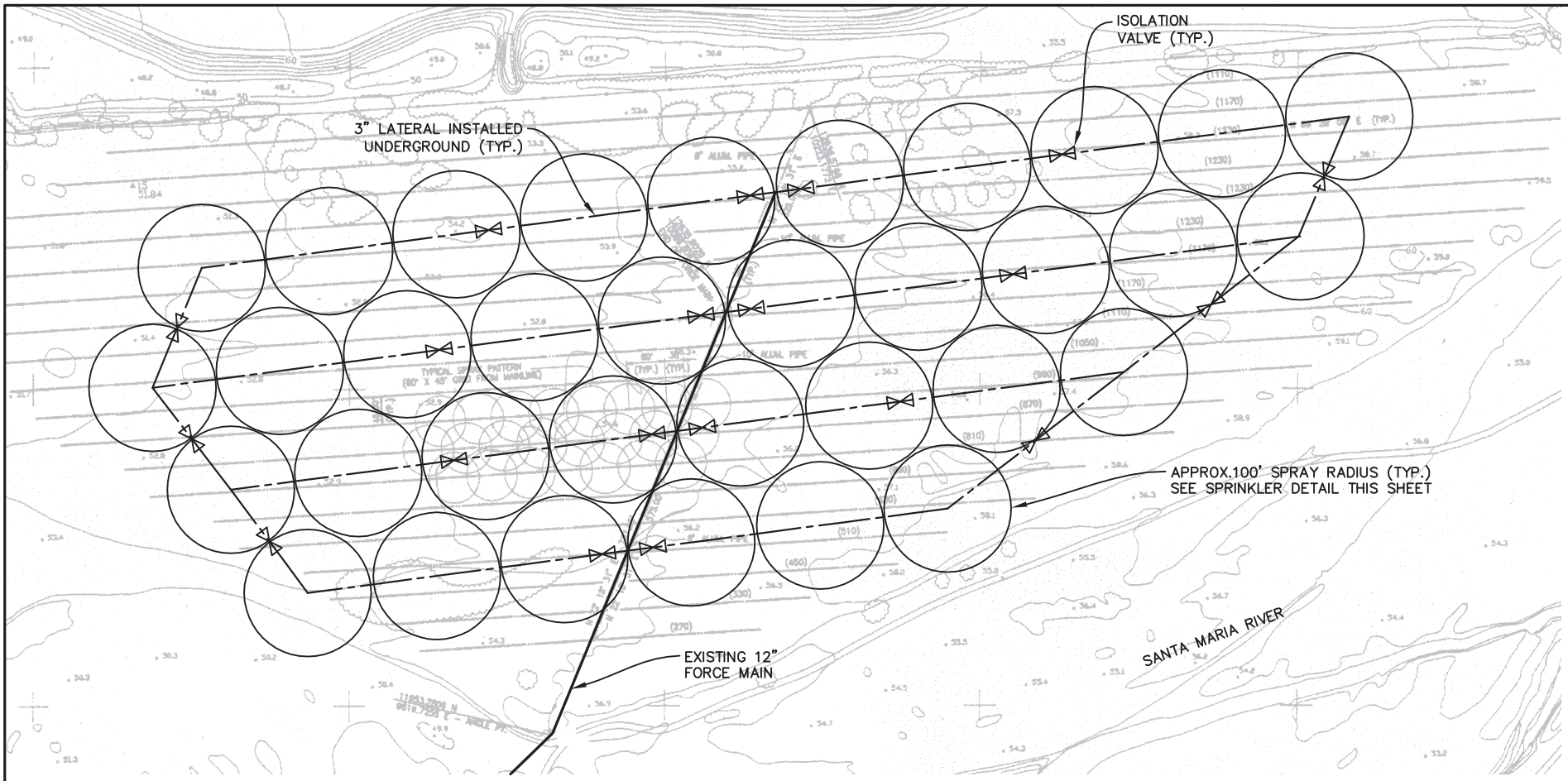

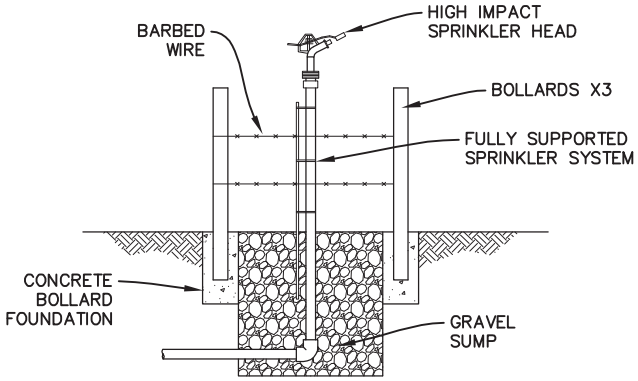

SPRINKLER DETAIL

SCALE: 1" = 4'

FIGURE 17

PROPOSED LAYOUT OF THE IRRIGATION SYSTEM

SCALE: 1" = 250'

DUDEK

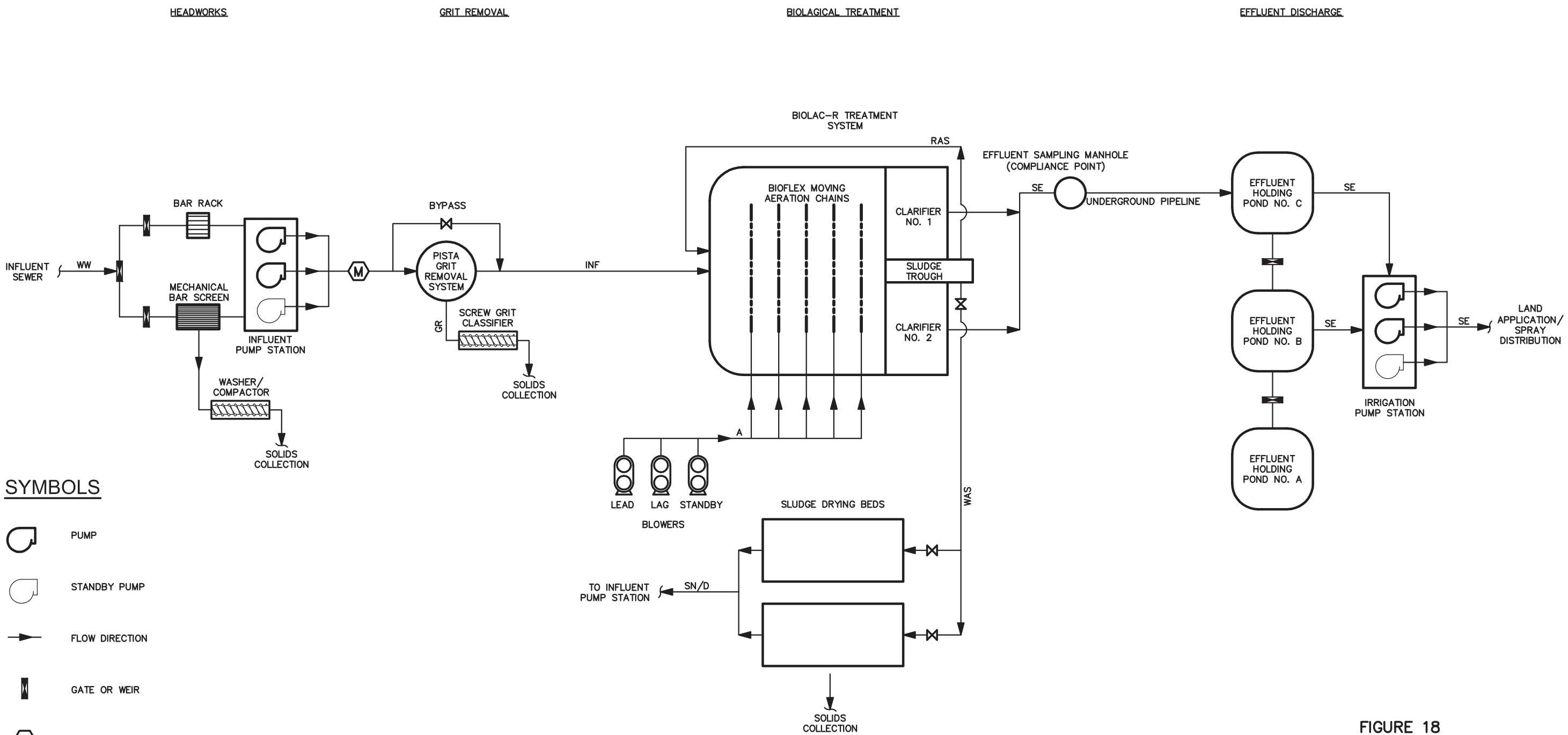

FIGURE 18

PROPOSED PROCESS FLOW DIAGRAM

NOT TO SCALE

DUDEK

4/30/2010 4:29:21 PM P:\101.Engineering\Guadalupe, City of\6576-Wastewater Treatment Plant\06 Design Data\CAD6576\dwg\6576 PFD-proposed

APPENDICES

Appendix A – Headworks Equipment Brochures
Appendix B – Grit Removal System Equipment Details
Appendix C – Biolac® Equipment Brochures
Appendix D – Alternate Sludge Dewatering Technologies Brochures
Appendix E – Cost Estimate
Appendix F – Process and Instrumentation Diagrams (P&IDs)

Appendix A
Headworks Equipment Brochures

Robust Simplicity In The Industry's Most Efficient Fine Screen—Plus Thru-Bar™ Cleaning

FlexRake®
FPFS
Mechanically Cleaned
Bar Screens

Robustly simple front cleaning, front return Duperon® FlexRake® technology. Utilizes stainless steel tear shaped bars with 1/4 inch, 3/8 inch or 1/2 inch openings.

- Simple With Few Parts and Little Maintenance—Just Runs
- Unique in the Industry: Thru-Bar™ Stainless Steel Scrapers Clean 3 Sides of the Bar as well as the Cross Members
- No Tight Clearances to Bind or Jam
- Engineered for 100% Reliable Alignment of Scrapers Into Bars
- Eliminates Need for Confined Space Entries and In-Channel Maintenance With No Lower Sprockets, Bearings, Tracks or Guides to Foul or Jam
- Five-Year Warranty for Wastewater Applications

Jam Evasion™ with Patented FlexLink™ Technology Protects Your Investment — Lifts or Pivots Around Debris

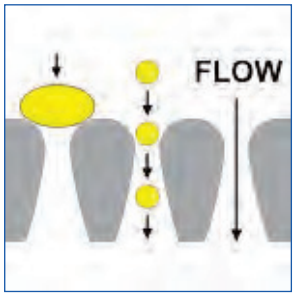

Tear Shaped Bars—
Highest Efficiency
in the Industry,
25% - 50% More Efficient

Duperon®
PRELIMINARY LIQUIDS/SOLIDS SEPARATION TECHNOLOGIES

Now, there's an easier way!℠

Duperon®
PRELIMINARY LIQUIDS/SOLIDS SEPARATION TECHNOLOGIES

Now, there's an easier way!℠

FlexRake®
FPFS
Mechanically Cleaned Bar Screens

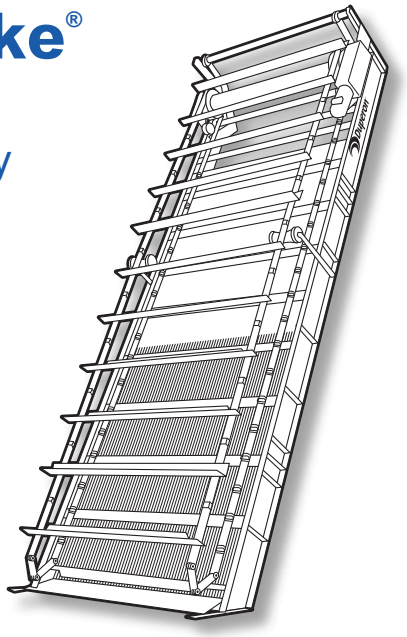

TYPICAL APPLICATIONS
Wastewater, combined sewer overflows and prison applications. Also used in pulp/paper mills, raw water intakes, and other applications where debris is susceptible to wrapping and clinging on the bar screen.

UNIT WIDTH
2 feet to 10 feet
Single Strand FlexRake® configuration available for channel widths of 18 inches to 24 inches.

UNIT LENGTH
10 feet to 100 feet

ANGLE OF INSTALLATION
Optimum: 30 degrees from vertical
Range from 10 degrees to 45 degrees, dependent upon site conditions.

STANDARD MATERIALS OF CONSTRUCTION
Standard: 304 Stainless Steel
Available in: 316 Stainless Steel

BAR OPENING
1/4 inch, 3/8 inch and 1/2 inch

STANDARD SCRAPER SPACING
Every 2nd link

SCRAPER CONFIGURATION
3:1 UHMW-PE staging scraper/stainless steel Thru-Bar™ teeth ratio. Scraper positioned every 21 inches.

TYPICAL MOTOR
1/2 HP, 1 PH/3 PH explosion proof, inverter-duty motor

STANDARD OPERATING SPEED
0.5 RPM
Can be increased to 2.2 RPM in high flow conditions.
1 discharge/minute on low, 4 discharges/minute on high
Scrapers move 28 inches/minute

SHIPPING DATA
Ships fully assembled or can be provided in modular form

STANDARD CONTROLS OPTIONS
Packages range from simple start/stop to sophisticated automation. Motor overload protection provided. Contact Duperon® for further details and assistance in selecting the perfect package for your site.

OPERATION OPTIONS
Continuous/Manual.
Automatic with timer, float, SCADA, differential/high level sensing options with I/O as needed.

Duperon's First Law of Simplicity: One part doing the work of many; two parts, one too many.

- Tear Shaped Bars—What is Larger Than the Openings Stays on Screen to Be Removed; What is Smaller Passes Through Due to Shape of Bars
- Cleans to Bottom of Channel—Bottom Plate Eliminates Debris Accumulation at Base
- Easy To Install and Easy To Operate

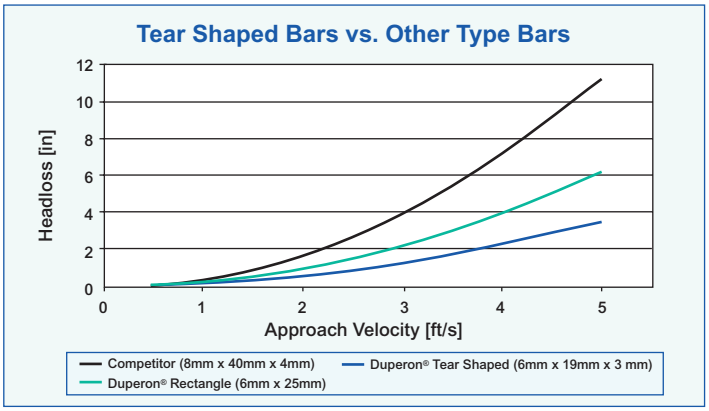

515 N. Washington Avenue | Saginaw, MI 48607 | P 989.754.8800 | F 989.754.2175 | TF 800.383.8479 | www.duperon.com

Duperon® and FlexRake® are registered trademarks of Duperon Corporation. FlexLink™, Jam-Evasion™, Thru-Bar™ are trademarks of Duperon Corporation. Now, there's an easier way!℠ is a service mark of Duperon Corporation.
© Copyright 2010, Duperon Corporation

Features

The RakeMax® is a bar screen with a spacing from 1/4″ to 6″ (6 to 150 mm). Its bars have either a streamlined tear drop profile (spacing ≤ 1/2″) or a rectangular shape (spacing > 1/2″).

The bar rack is an integral part of the sturdy frame, which ensures perfect meshing of the rake teeth with the bar spaces. Positive and reliable cleaning is thus guaranteed.

A multitude of rake bars are bolted at selectable distances to a pair of drive chains. With short distances between its rakes, the RakeMax® is able to remove extremely high screenings loads. The rake blades are made of sections that are bolted to the rake bars, thus facilitating easy replacement of a segment in case that its teeth should ever become damaged or worn.

Chain rollers, made of wear-resistant polyamide, guide the chains exactly within the frame. The chains are driven by a pair of cogwheels. The plastic rollers also prevent wear between the chains and the cogwheels. The drive is connected through a slip coupling. If the coupling should slip due to an obstruction in the bar rack, the movement is reversed back and forth until the obstruction is loosened or an alarm is triggered. Self-destruction of the screen is thus prevented.

Chains and cogwheels are made of hardened, zinc galvanized and chromated steel to combine great wear-resistance with excellent corrosion-protection. They are also available in stainless steel. The maintenance-free ceramic bearings of the lower cogwheels are well-proven in thousands of ROTAMAT® installations.

The RakeMax® has a small height above the operating floor. In spite of its outstanding discharge height of up to 65 ft (20 m) above the channel floor, the RakeMax® fits into virtually any building.

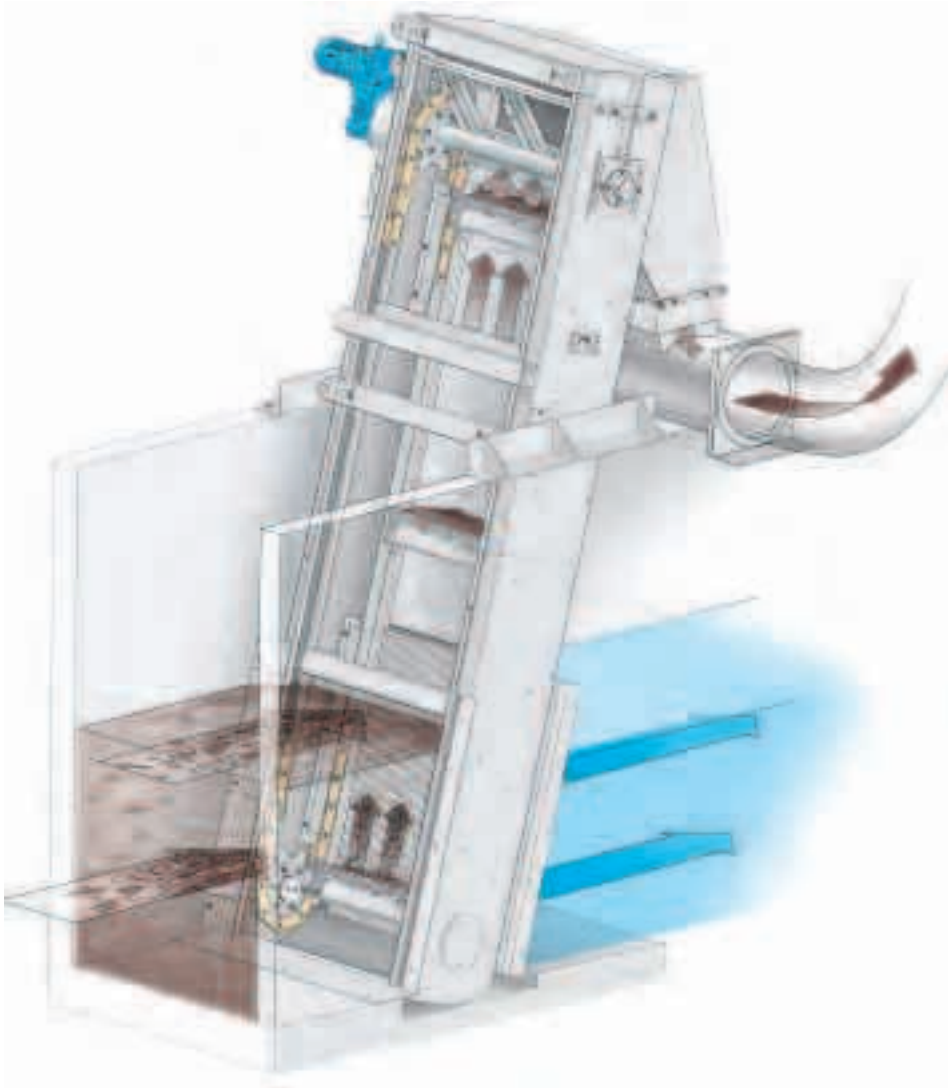

Benefits

- Fine to coarse screen with low head loss
- Removal of extremely high screenings loads
- Unimpaired by grit
- Low height above operating level
- Enclosure prevents odor nuisance
- Frame-mounted bar rack for exact rake engagement and reliable cleaning
- Mechanical overload-prevention and automatic reversion
- Easily accessible chain tensioning system
- Independently replaceable rake bars and blade sections
- Well-proven, maintenance-free lower ceramic bearings
- Sturdy design, excellent manufacturing with small tolerances
- Made of stainless steel, pickled in an acid bath for perfect finishing and corrosion protection

Details

Traveling rakes are bolted to the drive chains; individual sections of the rake blades can be exchanged in case that teeth should become damaged or worn; the ceramic bearings are maintenance-free (no lubrication)

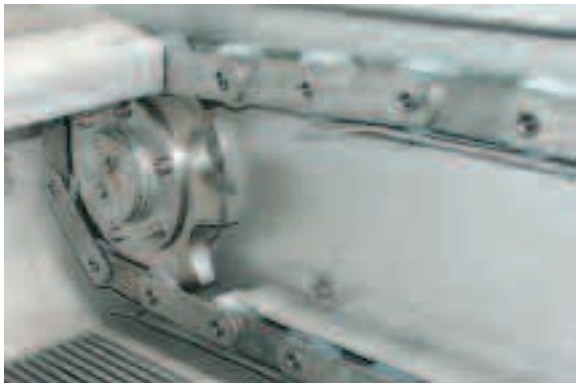

Cog wheel and chain are made of hardened, wear-resistant steel that is zinc electroplated and chrome galvanized for long-term corrosion protection; alternatively, wheels and chains can be made of stainless steel

Bar rack with a spacing of 1/4 inch (6 mm); the bars have a streamlined tear drop profile resulting in low head loss and avoiding jamming; RakeMax screens are unimpaired by grit and gravel

A control-independent safety system (torque compensator) reliably protects the screen against damage giving an electric signal. The specific design principle ensures high adjustability and continuous control.

Model VMR
MULTI-RAKE SCREEN

For over 30 years, Vulcan Industries has been a leader in manufacturing quality wastewater equipment used around the world. The VMR Multi-Rake Screen continues the tradition of excellence, incorporating many of the same features found in our Severe Duty™ Mensch Crawler™ Screen. Coupling these tried and true features with Vulcan's own UL approved, fully automatic, multiple speed controls produces quick and efficient screenings removal. Designed for use in high throughput volume applications, the VMR Multi-Rake Screen can efficiently remove large amounts of screenings with continuous operation. The versatility of the VMR Multi-Rake Screen makes it ideal for special applications of extreme channel depth and severe screen blinding. Heavy duty components used in the VMR Multi-Rake Screen ensure a long and productive service life even under the most severe conditions.

The VMR Multi-Rake screen is an automatic, self-cleaning mechanical bar screen designed for tough primary and secondary screening applications. The VMR Multi-Rake Screen can be customized for new construction as well as existing channels.

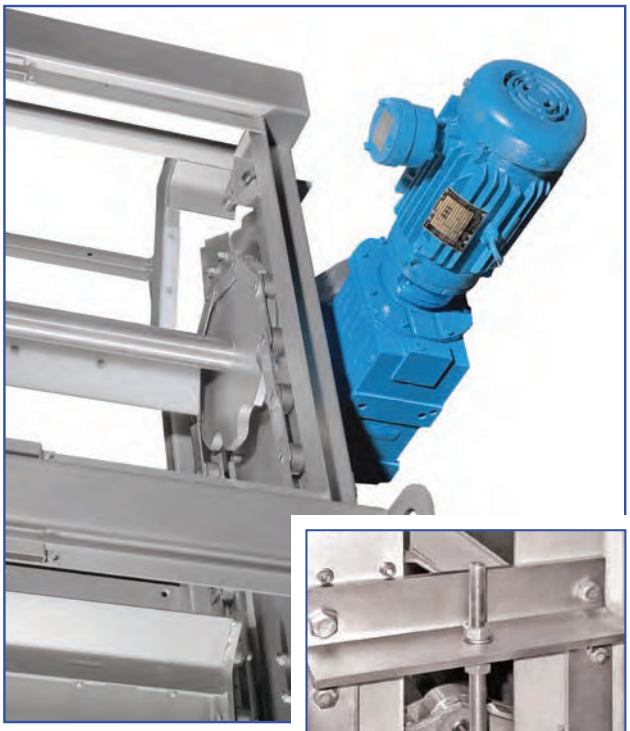

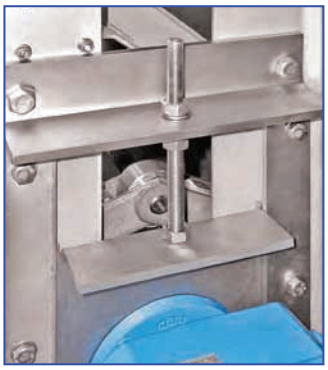

Easy adjustment system ➤ for proper chain tension and rake alignment

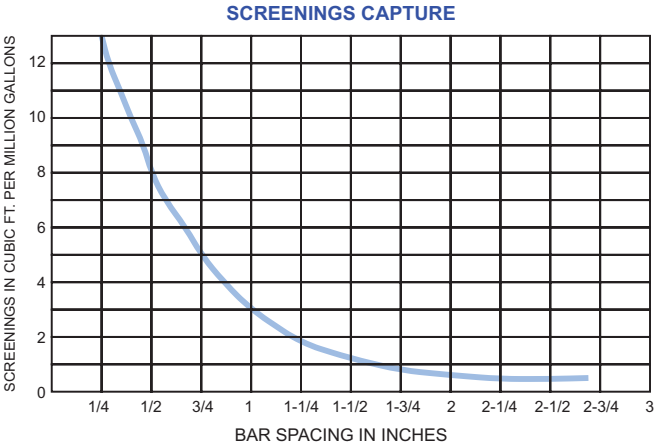

Heavy-duty stainless steel chain ➤ and sprocket drive system

STANDARD FEATURES

- Self-supporting integral frames with engineered bends for maximum strength. Key to stable deep channel applications.
- Fully automatic, multiple speed operation with U.L. approved controls.
- Deepest bar rack available in the industry for resistance to hydraulic loads.
- Full rake tooth penetration to eliminate blinding while operating at slower speeds, promoting longer rake and bar rack life.
- Positive rake engagement into the bar rack – no riding over materials.
- Large rake shelf for high solids loading in each pass.
- Accommodates additional rakes as needed.
- Brushless, water-free automatic discharge wiper eliminates brush adjustments and messy discharges. Self-positioning wiper with return to rest shocks include easily replaceable UHMW polyester wiper blades.
- Installs in channel widths from 2 ft to 13 ft and depths over 50 ft. Typical setting angles between 70 and 80 degrees.
- Choice of 304 or 316 stainless steel construction including drive sprockets and chain.
- Full covers and enclosed discharge chutes for maximum odor control.
- Variable Frequency Drive (VFD) for soft starting and flexible operating speed control.
- Bar rack clear spacing from ¼ inch to 3 inches.
- Bar rack design choices for coarse to fine screening options as shown below.

Rectangular

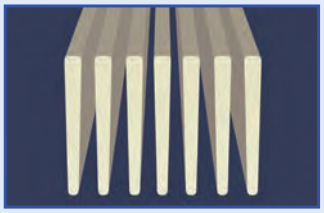
Trapezoidal

Teardrop

ELECTRICAL CONTROLS

Each control panel we provide is designed and manufactured by highly skilled technicians in our own electrical shop to meet the specifications for each particular project. Our panels are UL Listed and can meet UL 508A or UL 913 standards. Prior to shipment, each panel is fully assembled and tested. Panels can be installed as free standing, wall mounted or screen mounted. Control system design can include a variety of relay or programmable logic devices to interact with today's SCADA and HMI systems. Our standard control package includes timers with ultrasonic differential level control for starting and stopping the screen. Variable Frequency Drives (VFD) provide soft motor starts and a wide range of operating speeds to accommodate each particular application. Motor current is monitored to prevent damage to the screen drive system if something were to lodge into the bar rack. A reversing feature allows back cleaning of the bar rack to dislodge the article and then reverse again to continue screening.

Appendix B
Grit Removal System Equipment Details

PISTA® Grit Removal System

Smith & Loveless' commitment to market leadership in grit removal kindles on-going research and development, which leads to continued system innovations. Since the introduction of the original vortex **PISTA**® Grit Chamber in the early 1970s, S&L has developed numerous patented and exclusive components to further enhance the capability for complete grit removal, handling, and dewatering. This innovation and experience makes the unparalleled **PISTA**® the industry's most specified grit removal system today.

Exclusive & Patented Features

- *Flat Bottom **PISTA**® Grit Chamber*
- ***PISTA**® Grit Flow Control Baffle*
- ***PISTA**® 360-degree In-Line Design*
- *Low Energy-Use **PISTA**® Propeller*
- *S&L **PISTA**® Coanda Ramp Design*
- ***PISTA**® Grit Fluidizer Vane*
- ***PISTA**® Turbo Grit Pumps with **SonicStart**™*
- ***PISTA**® Grit Handling System*

C. Lancaster

PISTA® Grit Removal System *Unparalleled Vortex Grit Removal*

Removing grit reduces accumulation in downstream basins, channels and piping, thus preventing excess wear and abrasion on mechanical equipment and reduction of basin volumes and detention times.

The **PISTA**® Grit Removal System maintains the highest proven grit removal effciencies on the market over a wide range of daily flows. In fact, Smith & Loveless—backed by the experience *and* evidence of more than 2,000 system installations—publishes its removal efficiencies for a range of grit sizes, including fine grit. The **PISTA**® efficiencies are based on actual WWTP performance—not hypothetical testing or theorizing.

High removal efficiencies originate from the **PISTA**®'s unparalleled hydraulic design, including its flat grit chamber floor, engineered baffle arrangements and low-energy axial-flow propeller. The combination creates a true vortex which effectively separates grit from organics and the waste stream. Forced vortex action distinguishes the **PISTA**® because it does not rely *only* on less efficient particle settling or gravity.

Grit Characteristics & Removal

Grit consists of a variety of particles including sand, gravel and other heavy, discrete inorganic materials. A large majority of grit found in typical domestic sewage–in upwards of 90% and more–are coarser particles 50 mesh size grit and larger (300 µm). The remainder composition of smaller grit particles mostly ranges between 50 and 100 mesh (150 µm). Grit particles can reach 200 mesh (100 µm) in size—like silt—but turbulence in the flow prevents them from settling anywhere in the treatment scheme (not posing problems like typical grit). S&L's published removal efficiencies demonstrate percentage removal at various particulate sizes and total removal. Our field tests consistently prove that the **PISTA**® meets or exceeds 95 percent removal efficiency for all grit in a waste stream.

PISTA® Grit Chamber Features and Benefits

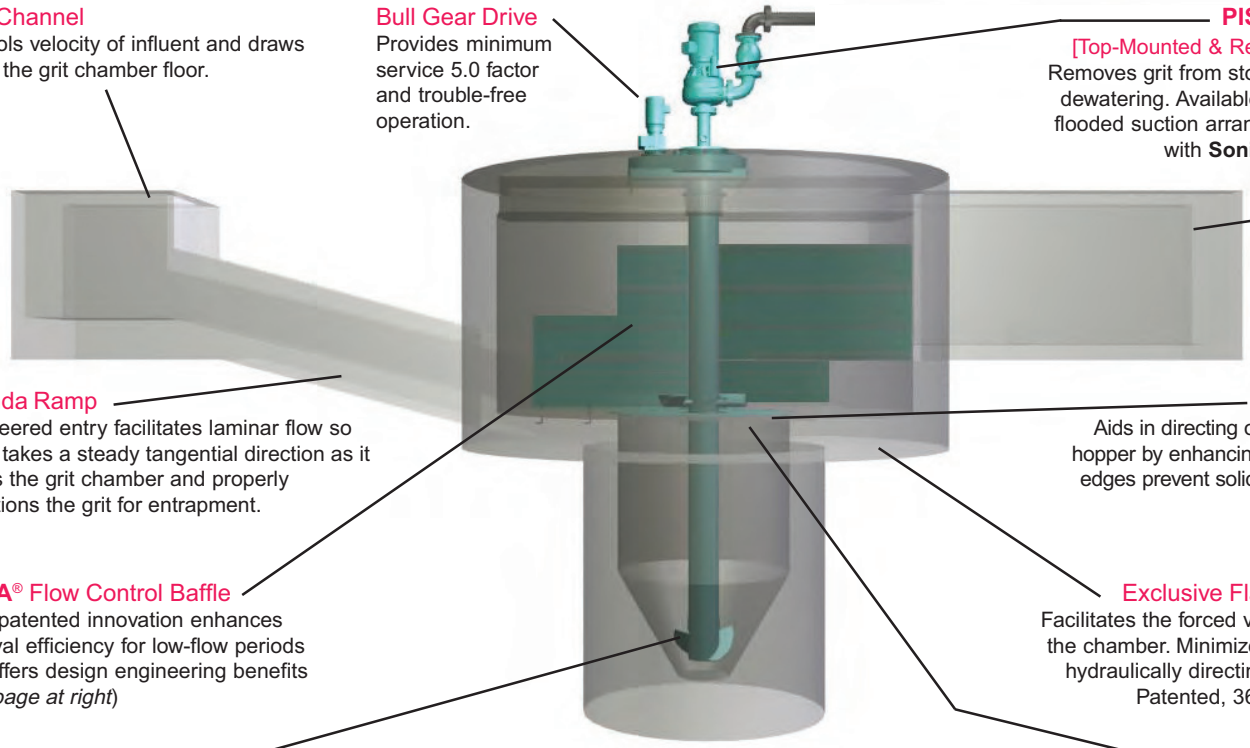

Inlet Channel
Controls velocity of influent and draws grit to the grit chamber floor.

Bull Gear Drive
Provides minimum service 5.0 factor and trouble-free operation.

PISTA® Turbo Grit Pump
[Top-Mounted & Remote-Mounted Options]
Removes grit from storage hopper to washing dewatering. Available in vacuum-primed and flooded suction arrangements. Now available with **SonicStart**™ prime sensing.

Outlet Channel
S&L can assist with design information for optimal performance.

Coanda Ramp
Engineered entry facilitates laminar flow so that it takes a steady tangential direction as it enters the grit chamber and properly conditions the grit for entrapment.

Axial-Flow Propeller
Aids in directing organic-free grit into lower hopper by enhancing flow patterns. Rounded edges prevent solids build-up, thus ensuring high efficiency.

PISTA® Flow Control Baffle
New, patented innovation enhances removal efficiency for low-flow periods and offers design engineering benefits (*see page at right*)

Exclusive Flat-Bottom Basin Floor
Facilitates the forced vortex flow pattern inside the chamber. Minimizes organic capture while hydraulically directing grit into lower hopper. Patented, 360-degree in-line design.

PISTA® Grit Fluidizer
Patented blade exclusive to S&L design. Loosens collected grit, preventing compacting.

Storage Hopper
Stores removed grit prior to dewatering.

Hopper Cover Plate
Stationary and recessed, it removes for quick access to storage hopper.

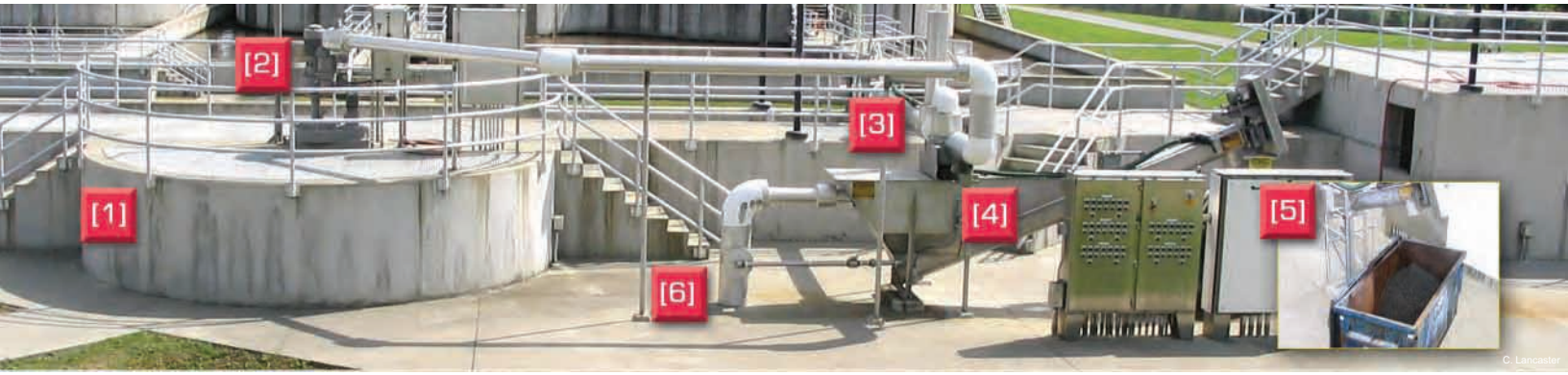

PISTA® Complete Grit Removal, Handling & Dewatering System Flow Scheme

[1] ***PISTA® Grit Chamber*** — Influent enters flat-floor grit chamber hydraulically guided by coanda ramp, internal baffles and central, low-speed propeller. Forced vortex drives grit particles to center chamber floor and into lower grit hopper while organics and flow continue to plant.

[2] ***PISTA® Turbo Grit Pump*** — Top-mounted or remote mounted unit pumps collected grit slurry (kept fluid by the **PISTA®** Grit Fluidizer) to the **PISTA®**'s second-stage grit washing and dewatering system while also providing proper head.

[3] ***PISTA® Grit Concentrator*** — Specifically engineered for the **PISTA®** system, this abrasion-resistant Ni-Hard unit washes grit further. It positions on the grit discharge line.

[4] ***PISTA® Grit Screw Conveyor*** — Grit from the concentrator deposits into the parallel (lamella) plate section of the S&L dewatering screw conveyor, which aids in retaining finer grit and reducing the stream's turbulence and overflow rate.

[5] ***Dewatered Grit Discharges*** from the top of the inclined screw conveyor into a container for disposal.

[6] ***The Flow and any Residual Organics are Returned*** to the inlet channel prior to the grit chamber, typically 93% of flow and 95% of organics.

Smith & Loveless Inc.

PISTA® Grit Removal System

The PISTA® Turbo Grit Pump

The **PISTA®** Turbo Grit Pump's heavy-duty design provides maximum grit pumping efficiency for Smith & Loveless **PISTA®** Grit Chamber grit hoppers. Designed specially for pumping grit slurry, the **PISTA®** Turbo Grit Pump comes equipped with a Ni-Hard volute and recessed impeller (located separately from the abrasive flow path) as well as the famous staples of S&L pump design: an oversized, stainless steel shaft and oversized bearings. This powerful combination yields reliable grit pumping and the velocity required for effective grit washing and dewatering devices, day-in and day-out for numerous years.

PISTA® Turbo Grit Pump Data

- **Up to 500 GPM (31.5 lps)**
- **4" & 6" Sizing**
- **Top-Mounted Vacuum Prime or Remote-Mounted Flooded Suction**
- **Ni-Hard Impeller & Volute**

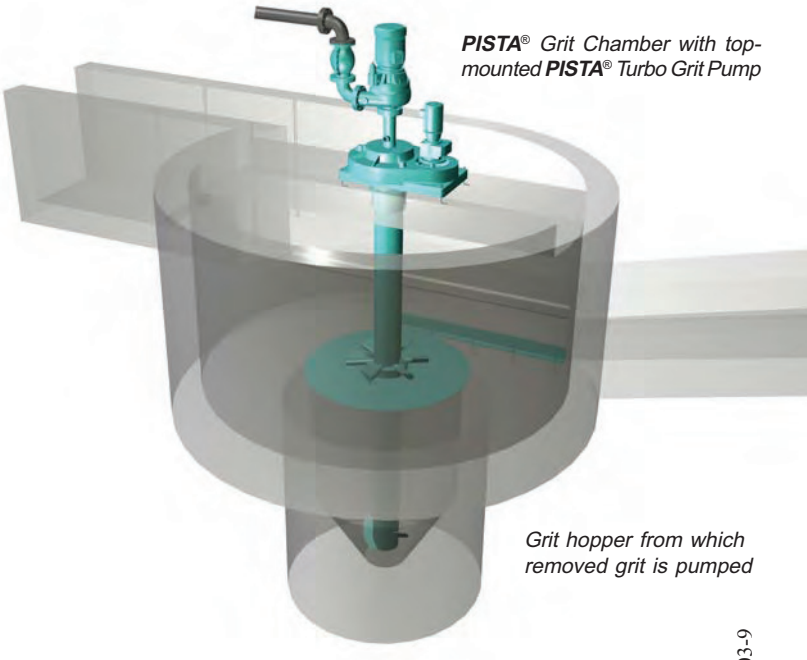

***PISTA®** Grit Chamber with top-mounted **PISTA®** Turbo Grit Pump*

Grit hopper from which removed grit is pumped

Key Points

1 Flexible Application: *VP or FS*

***PISTA®** Turbo Grit Pumps can be top-mounted (vacuum-primed with **Sonic Start™** prime sensing) or remote-mounted (flooded suction). Top-mounted units eliminate expensive piping while lowering the head and horsepower requirements — and thereby lowering operational costs.*

2 Ideal Upgrade for Airlifts

*Older systems may employ airlifts, which are less efficient and require blowers to remove collected grit. The **PISTA®** Turbo Grit Pump delivers more flow at a higher head, including at higher elevations.*

3 How it Works

As the hopper fills, the pump is triggered, eliminating continuous pumping.

Remote-mounted, flooded suction examples

© 2007 Smith & Loveless Inc. Bulletin 9503-9

Online: smithandloveless.com • **Phone:** 913.888.5201 • **FAX:** 913.888.2173

Smith & Loveless Inc. System Innovators for global pumping, water and wastewater treatment

Smith & Loveless Inc.

PISTA® Grit Removal System

The PISTA® Grit Fluidizer

The **PISTA®** Grit **FLUIDIZER®** is the ideal grit agitation device from the **PISTA®** Grit Chamber's storage hopper. It's simple yet patented design attaches propeller vanes to the same shaft as the chamber's rotating paddles. These vanes continually stir the collected grit slurry without any additional energy or controls. Larger **PISTA®** Grit Chambers typically employ a water line to aid in keeping heavy grit loads soft while also flushing the discharge line prior to the next pump cycle. **PISTA®** systems installed prior to the 1990s may not be equipped with a **FLUIDIZER®**, instead relying on air scouring, which requires the use of additional mechanical equipment and energy.

PISTA® Grit Fluidizer	
Introduced:	1992 (PATENTED)
System Benefit:	Prevents removed grit from compacting in the grit storage hopper.
Upgrade from:	Air scouring

Key Points

1 Fluidizing Action

The PISTA® Grit Fluidizer's patented, axial vanes are always rotating, keeping the grit fluid for easy pumping. Fluidized grit is less abrasive and less likely to compact. Attached to the propeller shaft, it does not require and valves, blowers or controls.

2 Ideal Upgrade from Air Scouring

Systems may employ air scouring, which can become a de facto airlift and actually dewater the grit stored in the hopper. This can make grit more difficult to remove. Additionally, air scouring may require blowers and associated equipment, which must be maintained and regulated.

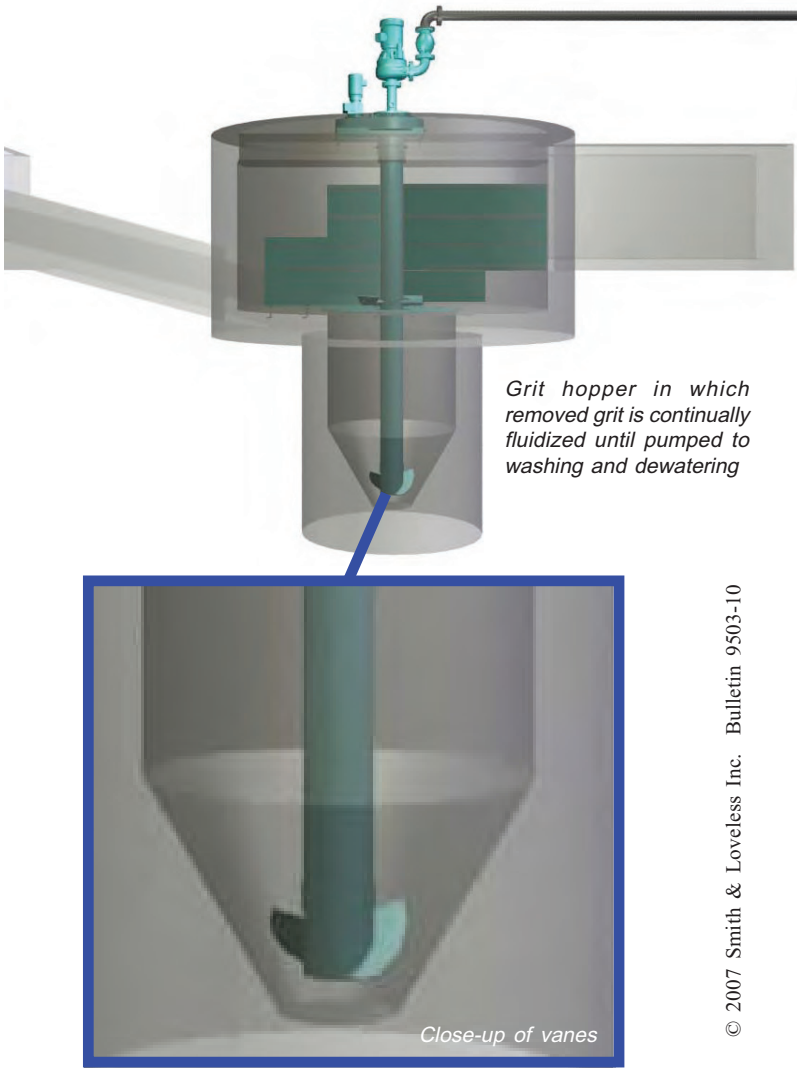

© 2007 Smith & Loveless Inc. Bulletin 9503-10

Online: smithandloveless.com • Phone: 913.888.5201 • FAX: 913.888.2173

SMITH & LOVELESS INC.

PISTA® Grit Removal System

The PISTA® Grit Concentrator

The durable **PISTA®** Grit Concentrator, featuring a large discharge orifice, effectively functions as a primary grit washing and dewatering device. The **PISTA®** Grit Concentrator separates the pumped flow into basic components of water, organics, and grit. Working in concert with the **PISTA®** Grit Screw Conveyor above which it snugly positions and discharges, the **PISTA®** Grit Concentrator leaves grit clean with a sandy texture. Ninety-five percent (95%) of the residual organics are removed, free from the organics that can become a smelly nuisance.

PISTA® Grit Concentrator	
Introduced:	1982, 1988, 1998
Benefit:	Primary grit washing & dewatering; compact
Sizing:	250-500 GPM (16-31.5 lps)

*The Smith & Loveless **PISTA®** Grit Concentrator comes in two sizes, larger flow at 500 gpm (left) and smaller flow at 250 gpm (below). Both feature NiHard construction and Versapox epoxy coating.*

Key Points

1 Large Orifice Minimizes Potential for Clogging

The ***PISTA®*** *Grit Concetrator features an orifice that minimizes clogging because of its generous 3.5" (8.89 cm) diameter. Other systems typically contain orifices with diameters only measuring 1"-2" (2.54 cm-5.08 cm) across. This means greater potential for plugging and the need for more frequent inspection.*

2 No Wearing Parts or Liners

*Unlike similar units, the **PISTA®** design does not implement internally wearing parts like liners. This prevents downtime by eliminating need for routine disassembly. Instead, the **PISTA®** Grit Concetrator relies on its rigid Ni-Hard iron, heavy-duty thick construction (1.25", 3.175 cm).*

© 2007 Smith & Loveless Inc. Bulletin 9503-11

Online: smithandloveless.com • Phone: 913.888.5201 • FAX: 913.888.2173

SMITH & LOVELESS INC. SYSTEM INNOVATORS FOR GLOBAL PUMPING, WATER AND WASTEWATER TREATMENT

Smith & Loveless Inc.

PISTA® Grit Removal System

PISTA® Grit Screw Conveyor

The second-stage **PISTA®** Grit Screw Conveyor is designed to work in concert with the complete **PISTA®** Grit Removal System, providing superb dewatering and high retention of fine grit without the burden of high maintenance. Dewatered grit discharges into a container for disposal while the flow and residual organics are retuned to the inlet channel prior to the grit chamber, typically 93% of the flow and 95% of the organics.

PISTA® Grit Screw Conveyor	
Introduced:	1989
System Benefit:	Lamella plate design aids in retention of fine grit while reducing turbulence & overflow
Upgrade from:	Screens
Sizing:	Models 15 & 17

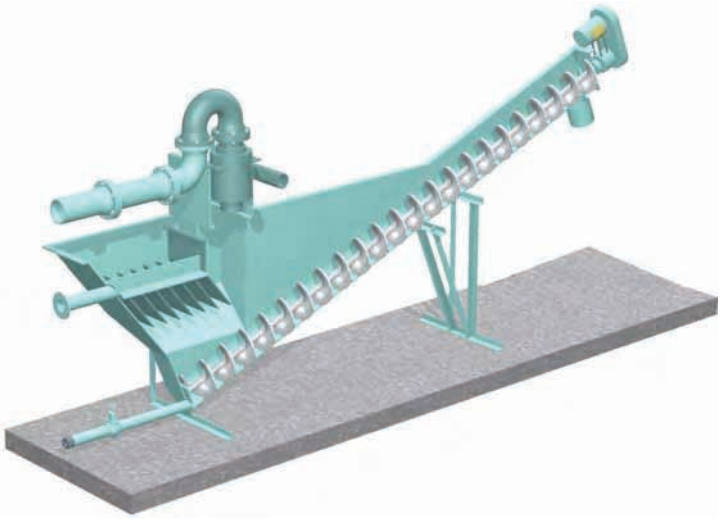

The ***PISTA®*** *Grit Screw Conveyor* retains ultra-fine grit and effectively washes and dewaters it for disposal —all in a hassle-free operation. Lamella parallel plates facilitate high rate settling.

Key Points

1 Unique Design Elements Retain Ultra-Fine Grit

*The **PISTA®** Grit Screw Conveyor's separate inlet zone, large Lamella parallel plate section that acts as a high-rate settling device, and double-sided weir trough work in concert to capture silt and and ultra fine grit. The inlet zone facilitates energy dissipation in order to reduce turbulence. This allows easier settling in the plate section while the larger weir trough lowers the carry-over rate.*

2 Ideal Upgrade for Screens

*Screens are typically maintenance-intensive because of their messy operation. Additionally, they can allow ultra-fine grit to be returned to the flow stream. The **PISTA®** Grit Screw Conveyor greatly reduces maintenance concerns (and mess) while producing dryer grit.*

© 2007 Smith & Loveless Inc. Bulletin 9503-12

Online: smithandloveless.com • Phone: 913.888.5201 • FAX: 913.888.2173

Smith & Loveless Inc. System Innovators for global pumping, water and wastewater treatment

Appendix C
Biolac® Equipment Brochures

Parkson™
Treating Water Right

Biolac®

Wastewater Treatment System

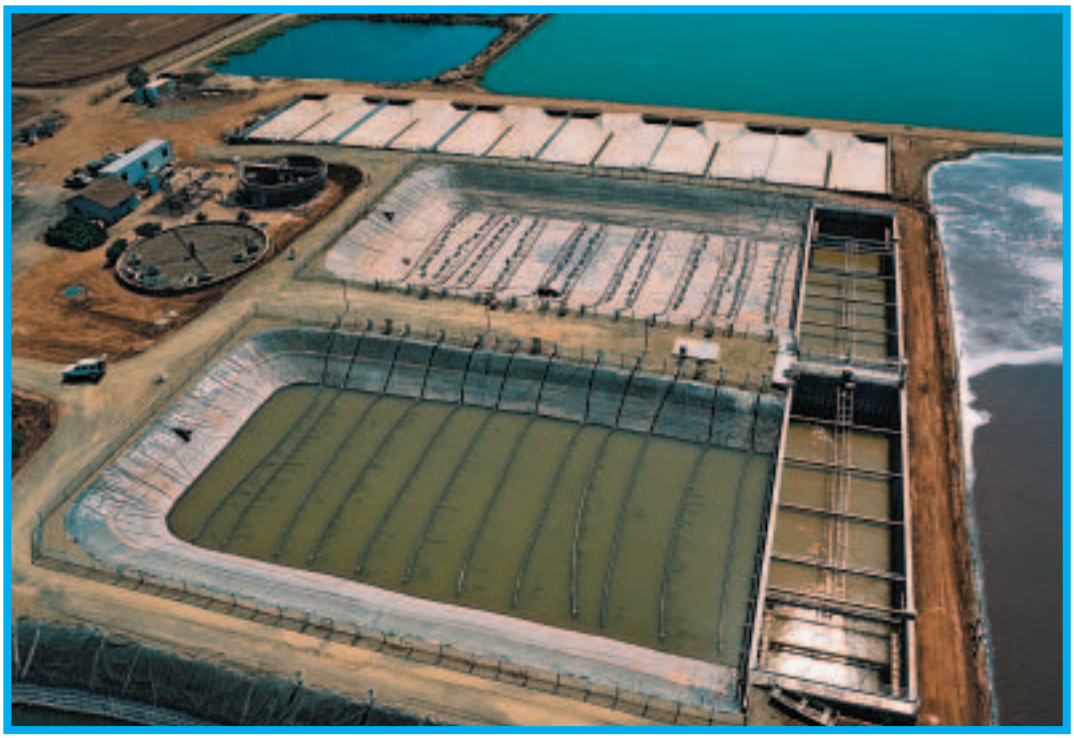

Biolac® Wastewater Treatment System
Extended sludge age biological technology

The Biolac® System is an innovative activated sludge process using extended retention of biological solids to create an extremely stable, easily operated system.

The capabilities of this unique technology far exceed ordinary extended aeration treatment. The Biolac process maximizes the stability of the operating environment and provides high-efficiency treatment. The design ensures the lowest-cost construction and guarantees operational simplicity. Over 500 Biolac Systems are installed throughout North America treating municipal wastewater and many types of industrial wastewater.

The Biolac system utilizes a longer sludge age than other aerobic systems. Sludge age, also known as SRT (solids retention time) or MCRT (mean cell residence time), defines the operating characteristics of any aerobic biological treatment system. A longer sludge age dramatically lowers effluent BOD and ammonia levels. The Biolac long sludge age process produces BOD levels of less than 10 mg/L and complete nitrification (less than 1 mg/L ammonia). Minor modifications to the system will extend its capabilities to denitrification and biological phosphorus removal.

While most extended aeration systems reach their maximum mixing capability at sludge ages of approximately 15-25 days, the Biolac System efficiently and uniformly mixes the aeration volumes associated with 30-70 day sludge age treatment.

The large quantity of biomass treats widely fluctuating loads with very few operational changes. Extreme sludge stability allows sludge wasting to non-aerated sludge ponds or basins and long storage times.

This innovative process features

- Low-loaded activated sludge technology
- High oxygen transfer efficiency delivery system
- Exceptional mixing energy from controlled aeration chain movement
- Simple system construction

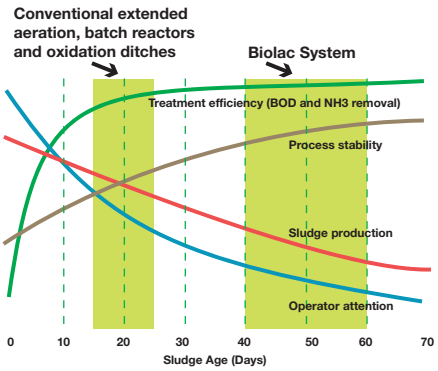

Aeration Components

Simple Process Control and Operation

The control and operation of the Biolac® process is similar to that of conventional extended aeration. Parkson provides a very basic system to control both the process and aeration. Additional controls required for denitrification, phosphorus removal, dissolved oxygen control and SCADA communications are also available.

Aeration System Components

The ability to mix large basin volumes using minimal energy is a function of the unique BioFlex moving aeration chains and the attached BioFuser® fine bubble diffuser assemblies. The gentle, controlled, back and forth motion of the chains and diffusers distributes the oxygen transfer and mixing energy evenly throughout the basin area. No additional airflow is required to maintain mixing.

Stationary fine-bubble aeration systems require 8-10 CFM of air per 1000 cu. ft. of aeration basin volume. The Biolac System maintains the required mixing of the activated sludge and suspension of the solids at only 4 CFM per 1000 cu.ft. of aeration basin volume. Mixing of a Biolac basin typically requires 35-50 percent of the energy of the design oxygen requirement. Therefore, air delivery to the basin can be reduced during periods of low loading without the risk of solids settling out of the wastewater.

System Construction

A major advantage of the Biolac system is its low installed cost. Most systems require costly in-ground concrete basins for the activated sludge portion of the process. A Biolac system can be installed in earthen basins, either lined or unlined. The BioFuser fine bubble diffusers require no mounting to basin floors or associated anchors and leveling. These diffusers are suspended from the BioFlex aeration chains above the basin floor. The only concrete structural work required is for the simple internal clarifier(s) and blower/control buildings.

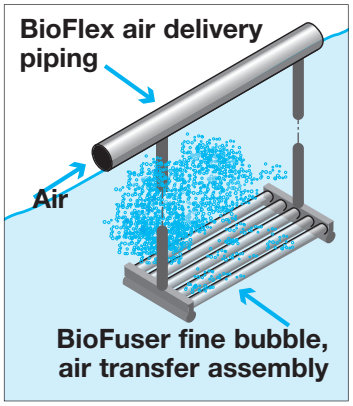

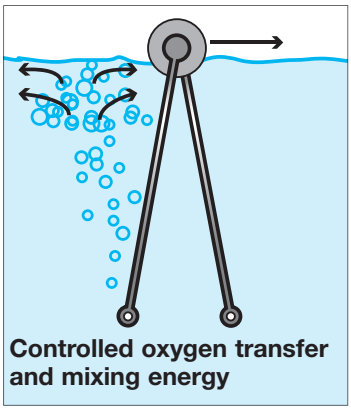

Biological Nutrient Removal

Simple control of the air distribution to the BioFlex chains creates moving waves of oxic and anoxic zones within the basin. This repeated cycling of environments nitrifies and denitrifies the wastewater without recycle pumping or additional external basins. This mode of Biolac® operation is known as the Wave Oxidation process. No additional in-basin equipment is required and simple timer-operated actuator valves regulate manipulation of the air distribution.

Biological phosphorus removal can also be accomplished by incorporating an anaerobic zone.

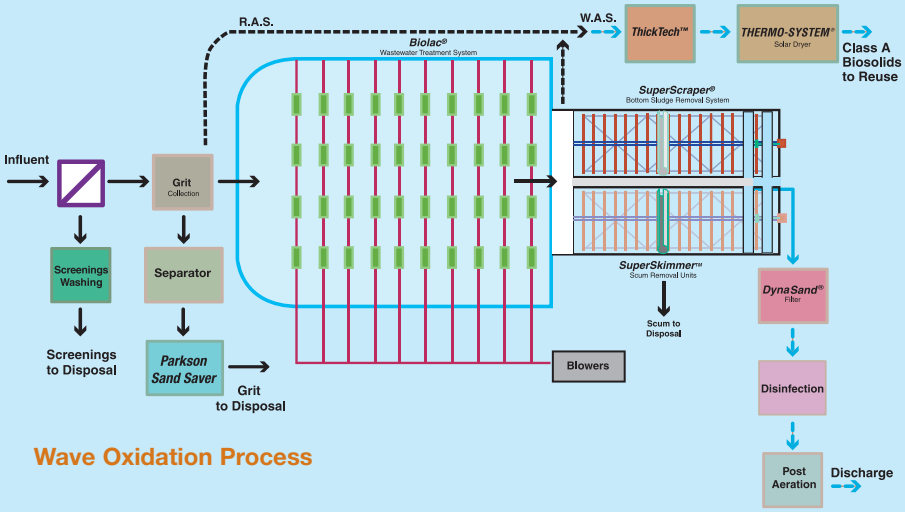

Wave Oxidation Process

Type “R” Clarifier

Land space and hydraulic efficiencies are maximized using the type “R” clarifier. The clarifier design incorporates a common wall between the clarifier and aeration basin. The inlet ports in the bottom of the wall create negligible hydraulic headloss and promote efficient solids removal by filtering the flow through the upper layer of the sludge blanket. The hopper-style bottom simplifies sludge concentration and removal, and minimizes clarifier HRT. The sludge return airlift pump provides important flexibility in RAS flows with no moving parts. All maintenance is performed from the surface without dewatering the clarifier.

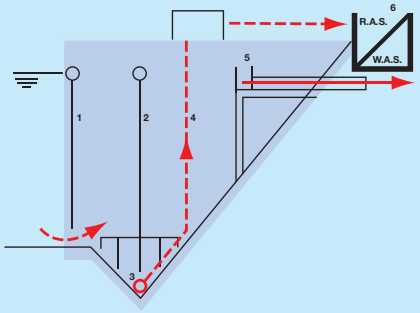

Type “SS” Clarifier

Higher flow systems incorporate a flat-bottom internal clarifier utilizing the Parkson SuperScraper® sludge removal system. This clarifier design maintains the efficiencies of the common wall layout while providing ample clarification surface area within the footprint of the aeration basin width. The SuperScraper system moves settled solids along the bottom of the clarifier to an integral collection trough. The unique design of the scraper blades and gentle forward movement of the SuperScraper system concentrates the biological solids as they are moved along the bottom of the clarifier without disturbing the sludge blanket.

A Parkson *Complete* Wastewater Treatment System

The Parkson “Complete” system featured here utilizes the Biolac® process with two flat-bottom internal Type SS clarifiers. SuperScraper® units are installed in the clarifier bottoms to simplify sludge removal. Influent screening with grit removal and appropriate residuals management such as washing, dewatering and conveying are included.

Sludge from the clarifiers is sent to the ThickTech rotary drum thickener and on to a THERMO-SYSTEM® Solar Sludge Dryer to reduce the volume of sludge by 50% and produce a Class “A” product suitable for beneficial reuse. Clarifier effluent is polished by a DynaSand® Filter followed by disinfection and post-aeration as the final steps prior to discharge.

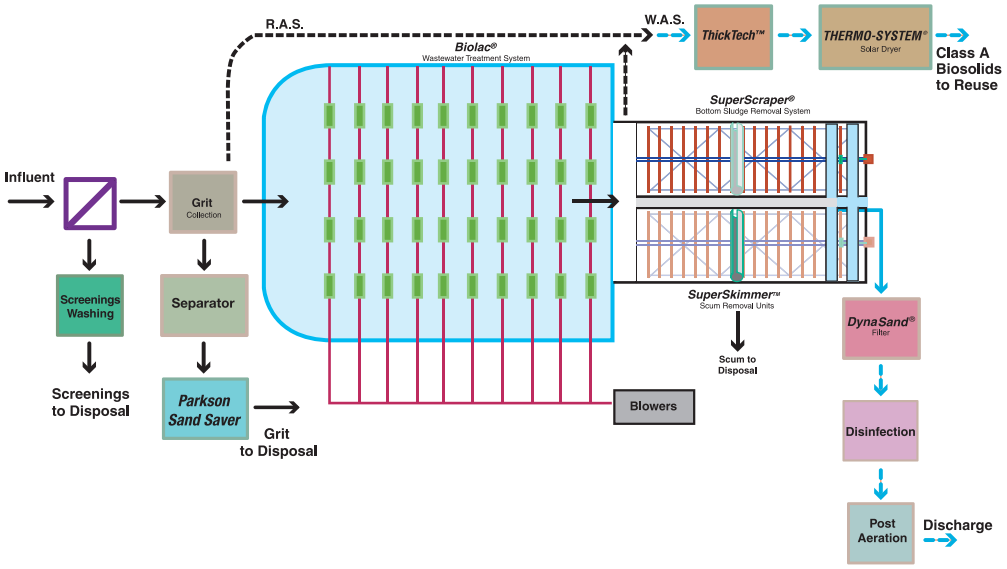

Parkson™
Treating Water Right

Fort Lauderdale Chicago Montreal Dubai

ISO 9001:2008 Certified
Quality Management System

AN AXEL JOHNSON INC. COMPANY

www.parkson.com
technology@parkson.com

1.888.PARKSON
1.954.974.6610

Mixed Sources
Product group from well-managed forests and other controlled sources
www.fsc.org Cert no. BV-COC-080207
© 1996 Forest Stewardship Council

BIOL-BL020109 ©2009 Parkson Corporation

Appendix D
Alternate Sludge Dewatering Technologies Brochures

DESKINS "QUICK-DRY"™ DEWATERING PROCESS

The Deskins "Quick-Dry"™ Dewatering System if the first patented process to integrate state of the art technologies to make dewatering on granular media an Efficient, Reliable, Predictable, and Cost Effective Process.

The Deskins "Quick-Dry"™ Process produces exceptionally dry Biosolids through the controlled application of these important design factors:

Enhanced Separation – To expedite the production of dry Biosolids, it is first necessary to chemically induce separation of the solids from water. The Deskins Process employs a unique polymer activation system with the patented RapidFloc™ Mixer to optimize agglomeration and floc formation.

Enhanced Solids Capture – The ultimate goal of any solids management program is the removal of solids from the treatment process. All mechanical methods of dewatering return 5-15% of the treated Biosolids to the head of the plant. The Deskins Process captures 99+% of the solids.

Enhanced Drainage - The Deskins "Quick-Dry"™ Filter Design, which incorporates pre-saturation and the Deskins "Quick-Dry"™ Drainage Panels, enhances drainage by preventing compaction of the Filter media, by the uniform distribution of Biosolids across the surface of the Filter, and by the natural development of vacuum assisted gravity drainage upon release of the impounded saturation water. Additionally, the Deskins Filter Design reduces the overall depth of Filter media which reduces the volume of water required to pre-saturate the media, shortens the drainage path, and reduces the volume of retained water in the media.

Enhanced Drying – The rapid drainage of water from the Biosolids results in the dramatic compression and reduction of the Biosolids layer captured on the surface of the granular media. Typically, the layer of Biosolids will thoroughly crack within 2-4 hours and will reach 10-24% dryness overnight. The cracked Biosolids layer more effectively absorbs the sun's radiant energy and rapidly transpires entrapped moisture.

The AquaTrac™ Series of Retrieving Machines are the first truly efficient means of mechanically collecting Biosolids from a granular media Filter. AquaTrac™ Models are selected based on the size and configuration of the Filter design.

The Deskins Process can include an optional procedure for developing "Class A) Biosolids through windrowing and aeration.

Highest Percent Solids Produced in the Dewatering Industry

US Patents: #5,683,583; #5,611,921; #5,660,733; #5,725,766; #5,770,056; #6,051,137 & #7,494,592

TYPICAL INSTALLATION

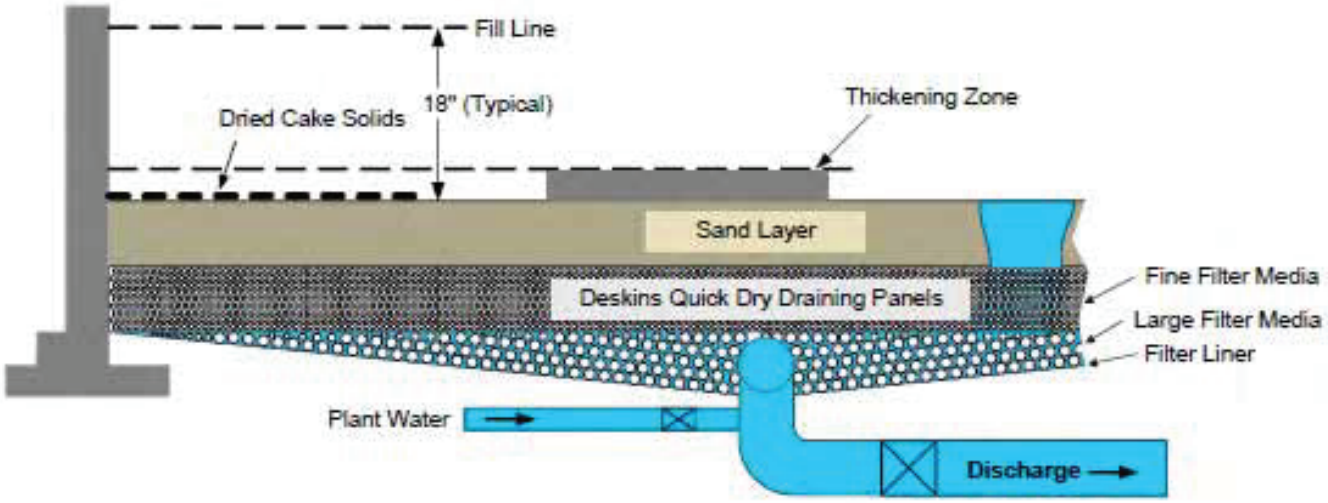

Pre-saturation

Discharge Valve

Quick Dry Filter Bed with RapidFloc Mixer

DYTEC ENVIRONMENTAL

THE ORIGINAL VACUUM SLUDGE DEWATERING BED SYSTEM

The (VSDB) Vacuum Sludge Dewatering Bed uses a simple, efficient and cost-effective technology. It has become the system of choice for many sludge dewatering applications throughout the world. It accomplishes rapid dewatering of most types of municipal waste and water treatment sludges, as well as a variety of industrial sludges.

The Vacuum Sludge Dewatering Bed system combines the overall simplicity of conventional sand beds with the faster handling of sludges associated with mechanical systems. For most sludges, the result can be a liftable cake suitable for handling within 24 hours.

System incorporates versatile and efficient operation, low labor and maintenance costs, low energy costs, low chemical costs, and overall cost.

Versatile and Efficient Operation

At design operating conditions, the system reliably provides a dewatered sludge cake of predictable dry solids content. When operated above normal design, the system still provides a liftable cake.

Low Labor and Maintenance Costs

The system has few moving parts. The reliable controls are familiar to most operators. Operating and maintenance costs are less than those of conventional drying beds. Because of the simplicity of the system, it may be operated and maintained by non technical personnel.

The cake can be removed manually or by front end loader . The rugged, abrasion-resistant media plates will withstand mechanical cake removal, providing years of trouble-free service. The durable media plates require essentially no maintenance. The VSDB filter is specifically designed for easy maintenance.

Low Energy Costs

For many systems, the maximum energy required is that necessary to run a 1.5 HP vacuum pump.

Low Chemical Costs

The VSDB is furnished with a polymer feed system and normally uses less polymer than any mechanical dewatering systems, resulting in substantial savings.

Low Total Costs

The VSDB normally proves to be the most cost-effective dewatering device in the marketplace today. Using EPA guidelines for a 20 year present worth cost comparisons, the VSDB is typically less expensive than the cost of mechanical dewatering. Other portions of the plant may be less expensive with a VSDB system. The filtrate from the system is low in solids and BOD, eliminating the need for extra treatment capacity to cope with recycled solids.

Experience

Over 20 years experience in sludge dewatering on WTP residuals, bio-solids and industrial slurries with a operating surface, epoxy bonded rock filter media. Over 200 vacuum beds in operation in 34 states and overseas.

Reliability

All VSDB mechanical and electrical systems use standard parts so replacement is days instead of weeks.

Flexibility

The size of the beds are tailored to each of the installations. We presently have installations as small as 6 ft x 12 ft ranging up to beds 16ft x 124 ft, handling up to 20,000 lbs of solids per application. In addition, the VSDB's provide cross-over capabilities that result in minimum down time.

Compatibility

Vacuum Sludge Dewatering Beds have successfully been retrofitted in existing sand beds, buildings or within unusual land constraints. When supplemental processing of sludge is required, the VSDB has been used in conjunction with composting – pre-coat – heating – bed enclosures – solar.

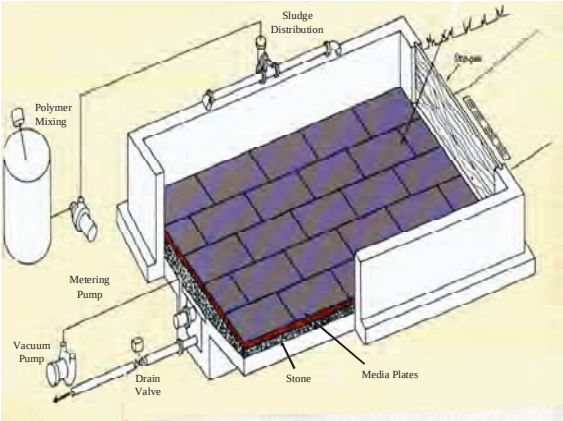

The VSDB has successfully been used for industrial agricultural and municipal wastewater sludges such as:

- Aerobically Digested (W.A.S.)
- Aerobically Digested
- Ferric Sludge (Dewatering and Recovery)
- Alum (Dewatering and Recovery)
- Lime
- Primary
- Oxidation Ditch (Undigested)
- Livestock Waste
- Food Processing Industry
- Paper Industry
- Utilities
- Mining Industry
- Chemical Industry

View of a Typical Vacuum Sludge Dewatering Bed

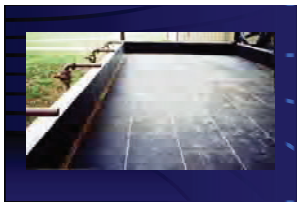

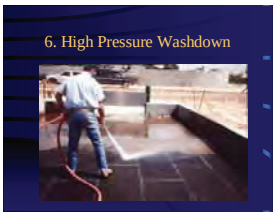

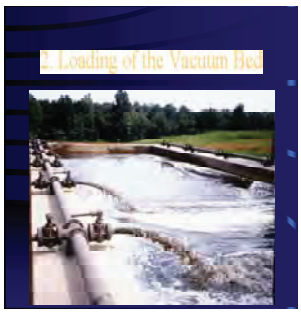

Appendix E
Cost Estimate

ENGINEER'S OPINION OF PROBABLE CONSTRUCTION COST

CITY OF GUADALUPE, DEPARTMENT OF PUBLIC WORKS
WASTEWATER TREATMENT PLANT IMPROVEMENTS
DUDEK JOB NO.: 6576
DATE: May 04, 2010
JOB STATUS: CONCEPTUAL DESIGN (TM1)

COST SUMMARY SHEET - TOTAL PROJECT			
DESIGN PACKAGE		SUBTOTAL	
1	HEADWORKS	$	474,000.00
2	GRIT REMOVAL SYSTEM	$	223,000.00
3	BIOLAC SYSTEM AND BLOWERS	$	1,389,000.00
4	SLUDGE DRYING BEDS	$	1,414,000.00
5	EFFLUENT PIPELINE, HOLDING PONDS	$	895,000.00
6	IRRIGATION PUMP STATION	$	263,000.00
7	SPRAY DISTRIBUTION SYSTEM	$	425,000.00
8	SITE SERVICES	$	1,527,000.00
9	DREDGING AND DISPOSAL	$	750,000.00
10	MOBILIZATION AND DEMOBILIZATION (5%)	$	368,000.00
	TOTAL	**$**	**7,728,000.00**

COST SUMMARY SHEET - REDUCED SCOPE PROJECT			
DESIGN PACKAGE		SUBTOTAL	
1	HEADWORKS	$	474,000.00
2	BIOLAC SYSTEM AND BLOWERS	$	1,389,000.00
3	ALTERNATIVE SLUDGE PROCESSING	$	707,000.00
4	SITE SERVICES	$	520,000.00
5	DREDGING AND DISPOSAL	$	750,000.00
6	MOBILIZATION AND DEMOBILIZATION (5%)	$	192,000.00
	TOTAL	**$**	**4,032,000.00**

PROJECT:	JOB NO.: 6576	DATE: May 04, 2010	
CITY OF GUADALUPE, DEPARTMENT OF PUBLIC WORKS WASTEWATER TREATMENT PLANT IMPROVEMENTS	ESTIMATE BY: DUDEK		COMMENTS:
AREA/PROCESS LOCATION: HEADWORKS	JOB STATUS: CONCEPTUAL DESIGN (TM1)		

ITEM DESCRIPTION	EST. QTY.	UNIT	EST. UNIT COST	TOTAL
Concrete	1	CY	$ 700.00	$ 700.00
Grout	1	CY	$ 500.00	$ 250.00
Painting and Coating	1	LS	$ 10,000.00	$ 10,000.00
Furnish and Install Influent Screen	1	EA	$ 188,500.00	$ 188,500.00
Furnish and Install Washer/Compactor	1	EA	$ 100,100.00	$ 100,100.00
Furnish and Install Non-clog submersible pumps	3	EA	$ 20,540.00	$ 61,620.00
Furnish and Install Lift crane	1	EA	$ 10,000.00	$ 10,000.00
Furnish and Install 8" FLG Check Valve	2	EA	$ 1,500.00	$ 3,000.00
Furnish and Install 8" Flow Meter	1	EA	$ 5,000.00	$ 5,000.00
Connect with Influent Lift Station Control Panel (ILS-CP)	1	LS	$ 3,000.00	$ 3,000.00
Install Influent Screenings Control Panel (IS-CP)	1	LS	$ 3,000.00	$ 3,000.00
Repair/Fix Lights	1	LS	$ 4,000.00	$ 4,000.00
Furnish and Install New VFD	1	EA	$ 10,000.00	$ 10,000.00
VFD Air conditioning, dust control structure	1	LS	$ 8,000.00	$ 8,000.00
Float Switches	1	LS	$ 3,000.00	$ 3,000.00
Level Alarm	1	LS	$ 2,000.00	$ 2,000.00
			SUBTOTAL	$412,170.00
			CONTINGENCY (15%)	$61,825.50
			TOTAL	$473,995.50
			TOTAL ESTIMATED COSTS	$474,000.00

DUDEK

PROJECT:	JOB NO.: 6576	DATE: May 04, 2010
CITY OF GUADALUPE, DEPARTMENT OF PUBLIC WORKS WASTEWATER TREATMENT PLANT IMPROVEMENTS	ESTIMATE BY: DUDEK	COMMENTS:
AREA/PROCESS LOCATION: GRIT REMOVAL SYSTEM	JOB STATUS: CONCEPTUAL DESIGN (TM1)	

ITEM DESCRIPTION	EST. QTY.	UNIT	ESTIMATED UNIT COST	TOTAL
ALTERNATIVE 1: TOP MOUNTED GRIT PUMP				
Concrete Slab and Pedestal for Classifier	8	CY	$ 700.00	$ 5,600.00
Fill existing grit suction outlet with grout	1	CY	$ 500.00	$ 500.00
Painting and Coating	1	LS	$ 3,000.00	$ 3,000.00
Furnish and install Pista Grit Removal System complete	1	EA	$ 182,000.00	$ 182,000.00
Furnish and Install 4" DI Pipe	20	LF	$ 25.00	$ 500.00
Furnish and Install 4" FLG 90 Degree DI Bend	3	EA	$ 300.00	$ 900.00
Drainage piping, classifier	30	LF	$ 35.00	$ 1,050.00
			SUBTOTAL	$193,550.00
			CONTINGENCY (15%)	$29,032.50
			TOTAL	$222,582.50
			TOTAL ESTIMATED COSTS	$223,000.00

ALTERNATIVE 2: EXISTING SYSTEM REHAB

ITEM DESCRIPTION	EST. QTY.	UNIT	ESTIMATED UNIT COST	TOTAL
Painting and Coating	1	LS	$ 7,000.00	$ 7,000.00
Furnish and install Pista Grit Motor, pump, and classifier	1	EA	$ 163,800.00	$ 163,800.00
Furnish and Install 4" DI Pipe	10	LF	$ 25.00	$ 250.00
Furnish and Install 4" FLG 90 Degree DI Bend	3	EA	$ 300.00	$ 900.00
Drainage piping, classifier	20	LF	$ 35.00	$ 700.00
			SUBTOTAL	$172,650.00
			CONTINGENCY (15%)	$25,897.50
			TOTAL	$198,547.50
			TOTAL ESTIMATED COSTS	$199,000.00

PROJECT:	JOB NO.: 6576	DATE: May 04, 2010	
CITY OF GUADALUPE, DEPARTMENT OF PUBLIC WORKS WASTEWATER TREATMENT PLANT IMPROVEMENTS	ESTIMATE BY: DUDEK		COMMENTS:
AREA/PROCESS LOCATION: BIOLAC SYSTEM AND BLOWERS	JOB STATUS: CONCEPTUAL DESIGN (TM1)		

ITEM DESCRIPTION	EST. QTY.	UNIT	ESTIMATED UNIT COST	UNIT
Earthwork	5,000	CY	$ 8.00	$ 40,000.00
Anchor Posts	20	EA	$ 500.00	$ 10,000.00
Concrete walls and slabs	400	CY	$ 700.00	$ 280,000.00
Grout for sludge piping	25	CY	$ 500.00	$ 12,500.00
Miscellaneous concrete	5	CY	$ 700.00	$ 3,500.00
Furnish and Install Prefabricated Building for blowers	550	SF	$ 50.00	$ 27,500.00
Biolac Equipment Including Blowers	1	LS	$ 761,800.00	$ 761,800.00
Furnish and Install SST Air Header 14"	500	LS	$ 60.00	$ 30,000.00
Furnish and Install 8" DI Pipe	400	LF	$ 45.00	$ 18,000.00
Furnish and Install 6" x 4" FLG Eccentric Reducer	3	EA	$ 300.00	$ 900.00
Furnish and Install 6" FLG Check Valves	3	EA	$ 800.00	$ 2,400.00
Furnish and Install 6" FLG Butterfly Valves	3	EA	$ 700.00	$ 2,100.00
Furnish and Install 6" FLG Pressure Relief Valve and Gauge	3	EA	$ 800.00	$ 2,400.00
Furnish and Install 6" FLG Dismantling Joint	3	EA	$ 1,000.00	$ 3,000.00
HVAC for Blower Building	1	LS	$ 8,000.00	$ 8,000.00
Blower Building Lighting and Receptacles	1	LS	$ 6,000.00	$ 6,000.00
			SUBTOTAL	$1,208,100.00
			CONTINGENCY (15%)	$181,215.00
			TOTAL	$1,389,315.00
			TOTAL ESTIMATED COSTS	$1,389,000.00

PROJECT:	JOB NO.: 6576	DATE: May 04, 2010	
CITY OF GUADALUPE, DEPARTMENT OF PUBLIC WORKS WASTEWATER TREATMENT PLANT IMPROVEMENTS	ESTIMATE BY: DUDEK		COMMENTS:
AREA/PROCESS LOCATION: SLUDGE DRYING BEDS	JOB STATUS: CONCEPTUAL DESIGN (TM1)		

ITEM DESCRIPTION	EST. QTY.	UNIT	ESTIMATED UNIT COST	UNIT
3/4" Crushed Rock	2,100	CY	$ 45.00	$ 94,500.00
Sand Bed 12" Thick	1,400	CY	$ 45.00	$ 63,000.00
Scarify and Compact sub-grade	48,000	SF	$ 5.00	$ 240,000.00
Wall Footings	200	CY	$ 500.00	$ 100,000.00
Drive Strips for sludge removal (6" thick x 2' wide)	200	CY	$ 600.00	$ 120,000.00
Furnish and Install 4" thick conc. splash pad & loader ramps	300	CY	$ 400.00	$ 120,000.00
Furnish and Install Concrete Sewer Cleanout	4	EA	$ 2,000.00	$ 8,000.00
3' High CMU Wall (8" thick reinforced blocks)	5,520	SF	$ 40.00	$ 220,800.00
Furnish and Install 6" x 6" x 4" 45 Degree Wye	10	EA	$ 550.00	$ 5,500.00
Furnish and Install 4" PVC Perforated Underdrain	3,200	LF	$ 45.00	$ 144,000.00
Furnish and Install 4" 45 Degree Bend Push On	10	EA	$ 125.00	$ 1,250.00
Furnish and Install 4" PVC Pipe	420	LF	$ 40.00	$ 16,800.00
Furnish and Install 4" x 4" x 4" MJ Tee	10	EA	$ 400.00	$ 4,000.00
Furnish and Install 4" 90 Degree FLG Bend	10	EA	$ 250.00	$ 2,500.00
Furnish and Install 4" FLG Plug Valve	10	EA	$ 700.00	$ 7,000.00
Furnish and Install 4" FLG DI Spool	10	EA	$ 400.00	$ 4,000.00
Furnish and Install 4" 45 Degree Bend FLG	10	EA	$ 225.00	$ 2,250.00
Furnish and Install 4" 90 Degree Bend MJ	10	EA	$ 200.00	$ 2,000.00
Furnish and Install 4" x 4" x 4" FLG Tee	10	EA	$ 450.00	$ 4,500.00
Furnish and Install 6" MJ Plug Valve	2	EA	$ 800.00	$ 1,600.00
Furnish and Install 6" Pipe PVC	1,360	LF	$ 50.00	$ 68,000.00
			SUBTOTAL	$1,229,700.00
			CONTINGENCY (15%)	$184,455.00
			TOTAL	$1,414,155.00
			TOTAL ESTIMATED COSTS	$1,414,000.00

PROJECT:	JOB NO.: 6576	DATE: May 04, 2010	
CITY OF GUADALUPE, DEPARTMENT OF PUBLIC WORKS WASTEWATER TREATMENT PLANT IMPROVEMENTS	ESTIMATE BY: DUDEK		COMMENTS:
AREA/PROCESS LOCATION: EFFLUENT PIPELINE, HOLDING PONDS	JOB STATUS: CONCEPTUAL DESIGN (TM1)		

ITEM DESCRIPTION	EST. QTY.	UNIT	ESTIMATED UNIT COST	UNIT
HDPE Pipe	3,000	LF	$ 120.00	$ 360,000.00
Manholes/Vaults	3	EA	$ 6,000.00	$ 18,000.00
Earthwork	50,000	CY	$ 8.00	$ 400,000.00
			SUBTOTAL	$778,000.00
			CONTINGENCY (15%)	$116,700.00
			TOTAL	$894,700.00
			TOTAL ESTIMATED COSTS	$895,000.00

DUDEK

PROJECT:	JOB NO.: 6576	DATE: May 04, 2010	
CITY OF GUADALUPE, DEPARTMENT OF PUBLIC WORKS WASTEWATER TREATMENT PLANT IMPROVEMENTS	ESTIMATE BY: DUDEK		COMMENTS:
AREA/PROCESS LOCATION: IRRIGATION PUMP STATION	JOB STATUS: CONCEPTUAL DESIGN (TM1)		

ITEM DESCRIPTION	EST. QTY.	UNIT	ESTIMATED UNIT COST	UNIT
Furnish and Install Fencing	100	LF	$ 75.00	$ 7,500.00
Furnish and Install Prefabricated Building Controls & VFDs	400	SF	$ 50.00	$ 20,000.00
Furnish and Install Non-clog submersible pumps	3	LS	$ 27,200.00	$ 81,600.00
Furnish and Install Pump lift crane	1	EA	$ 20,000.00	$ 20,000.00
Furnish and Install Filters	3	EA	$ 8,000.00	$ 24,000.00
Furnish and Install Pump Permanent Installation Kit	3	LS	$ 2,000.00	$ 6,000.00
Furnish and Install Guide Rail	3	EA	$ 2,000.00	$ 6,000.00
Furnish and Install Pump station Control Panel	1	LS	$ 15,000.00	$ 15,000.00
Furnish and Install Pressure Sensor	3	EA	$ 3,000.00	$ 9,000.00
Furnish and Install Install New VFD	3	EA	$ 10,000.00	$ 30,000.00
Furnish and Install Alarm system, antenna	1	LS	$ 10,000.00	$ 10,000.00
			SUBTOTAL	$229,100.00
			CONTINGENCY (15%)	$34,365.00
			TOTAL	$263,465.00
			TOTAL ESTIMATED COSTS	$263,000.00

PROJECT:	JOB NO.: 6576	DATE: May 04, 2010	
CITY OF GUADALUPE, DEPARTMENT OF PUBLIC WORKS WASTEWATER TREATMENT PLANT IMPROVEMENTS	ESTIMATE BY: DUDEK		COMMENTS:
AREA/PROCESS LOCATION: SPRAY DISTRIBUTION SYSTEM	JOB STATUS: CONCEPTUAL DESIGN (TM1)		

ITEM DESCRIPTION	EST. QTY.	UNIT	ESTIMATED UNIT COST	UNIT
Aerate Ground to improve percolation	1	LS	$ 20,000.00	$ 20,000.00
Gravel	68	CY	$ 200.00	$ 13,600.00
Concrete	68	CY	$ 700.00	$ 47,600.00
Furnish and Install Sprinkler Nozzles/Guns	34	EA	$ 500.00	$ 17,000.00
Furnish and Install 2" DI pipe	136	LF	$ 15.00	$ 2,040.00
Furnish and Install 3" HDPE pipe	9,000	LF	$ 20.00	$ 180,000.00
Furnish and Install 8" HDPE pipe	1,000	LF	$ 35.00	$ 35,000.00
Furnish and Install 8" Gate Valves Valves	20	EA	$ 700.00	$ 14,000.00
Furnish and Install Bollards	110	EA	$ 300.00	$ 33,000.00
Furnish and Install 8" Tees	6	EA	$ 700.00	$ 4,200.00
Furnish and Install 3" Tees	34	EA	$ 100.00	$ 3,400.00
			SUBTOTAL	$369,840.00
			CONTINGENCY (15%)	$55,476.00
			TOTAL	$425,316.00
			TOTAL ESTIMATED COSTS	$425,000.00

PROJECT:	JOB NO.: 6576	DATE: May 04, 2010
CITY OF GUADALUPE, DEPARTMENT OF PUBLIC WORKS WASTEWATER TREATMENT PLANT IMPROVEMENTS	ESTIMATE BY: DUDEK	COMMENTS:
AREA/PROCESS LOCATION: SITE SERVICES	JOB STATUS: CONCEPTUAL DESIGN (TM1)	

ALTERNATIVE 1: TOTAL REHABILITATION PROJECT

ITEM DESCRIPTION	EST. QTY.	UNIT	ESTIMATED UNIT COST	UNIT
New Asphalt Concrete Paving (3" AC over 6" CAB)	82,000	SF	$ 5.00	$ 410,000.00
Demolition	1	LS	$ 300,000.00	$ 300,000.00
Finish Grading	1	LS	$ 15,000.00	$ 15,000.00
Misc. Earthwork	1	LS	$ 10,000.00	$ 10,000.00
Erosion Control	1	LS	$ 7,000.00	$ 7,000.00
Misc. Concrete	30	CY	$ 700.00	$ 21,000.00
Misc. Grout	30	CY	$ 500.00	$ 15,000.00
Furnish and Install 48" Diameter Sewer Manhole Complete	2	EA	$ 6,500.00	$ 13,000.00
Painting and Coating of Fuel Tank	1	LS	$ 25,000.00	$ 25,000.00
Fuel supply pump	1	LS	$ 5,000.00	$ 5,000.00
Generator Enclosure	1	LS	$ 8,000.00	$ 8,000.00
Plant Water pipe incl. fittings, install complete	4,100	LF	$ 35.00	$ 143,500.00
Plant Water Water Hose Station	10	EA	$ 500.00	$ 5,000.00
Furnish and Install 8" Drain Pipe PVC	1,000	LF	$ 50.00	$ 50,000.00
General Electrical (scope to develop)	1	LS	$ 300,000.00	$ 300,000.00
			SUBTOTAL	$1,327,500.00
			CONTINGENCY (15%)	$199,125.00
			TOTAL	$1,526,625.00
			TOTAL ESTIMATED COSTS	$1,527,000.00

ALTERNATIVE 2: REDUCED SCOPE PROJECT

ITEM DESCRIPTION	EST. QTY.	UNIT	ESTIMATED UNIT COST	UNIT
Gravel Driveway	40,000	SF	$ 1.50	$ 60,000.00
Demolition	1	LS	$ 10,000.00	$ 10,000.00
Finish Grading	1	LS	$ 5,000.00	$ 5,000.00
Misc. Earthwork	1	LS	$ 5,000.00	$ 5,000.00
Erosion Control	1	LS	$ 4,000.00	$ 4,000.00
Misc. Concrete	7	CY	$ 700.00	$ 4,900.00
Misc. Grout	2	CY	$ 500.00	$ 1,000.00
Furnish and Install 48" Diameter Sewer Manhole Complete	1	EA	$ 6,500.00	$ 6,500.00
Plant Water pipe incl. fittings, install complete	2,000	LF	$ 35.00	$ 70,000.00
Plant Water Water Hose Station	2	EA	$ 500.00	$ 1,000.00
Furnish and Install 8" Drain Pipe PVC	700	LF	$ 50.00	$ 35,000.00
General Electrical (scope to develop)	1	LS	$ 250,000.00	$ 250,000.00
			SUBTOTAL	$452,400.00
			CONTINGENCY (15%)	$67,860.00
			TOTAL	$520,260.00
			TOTAL ESTIMATED COSTS	$520,000.00

Appendix F
Preliminary Process and Instrumentation Diagrams (P&IDs)

INSTRUMENT TAG IDENTIFICATION

	PRIMARY LOCATION (b)NORMALLY ACCESSIBLE TO OPERATOR	FIELD MOUNT	AUXILIARY LOCATION (b)NORMALLY ACCESSIBLE TO OPERATOR
DISCRETE INSTRUMENTS	LCP		LCP
SHARED DISPLAY, SHARED CONTROL	LCP		LCP
COMPUTER FUNCTION	LCP		LCP
PROGRAMMABLE LOGIC CONTROL	LCP		LCP

(a) DESIGNATIONS SUCH AS 100 (LOCAL CONTROL BOARD NO. 100), 200 (LOCAL CONTROL BOARD NO.200), ETC., ARE USED WHEN NECESSARY TO SPECIFY INSTRUMENT OR FUNCTION LOCATION.

(b) NORMALLY INACCESSIBLE OR BEHIND–THE–PANEL DEVICES OR FUNCTIONS ARE DEPICTED BY USING THE SAME SYMBOLS BUT WITH DASHED HORIZONTAL BARS, I.E.

SINGLE INSTRUMENT OR OTHER COMPONENT HAVING MULTIPLE FUNCTIONS

(XXX) I — SOFTWARE OR LOGIC RESIDENT IN DISTRIBUTED CONTROL SYSTEM (DCS) AT PROGRAMMABLE LOGIC CONTROLLER (PLC) XXX. SEE ASSOCIATED LOGIC DIAGRAMS.

(XXX) — PANEL MOUNTED PILOT LIGHT WITH PANEL NUMBER DESIGNATION(i.e. XXX = 100, 200, ETC.).

FY — INSTRUMENT PANEL MOUNTED WITH COMPUTING OR CONVERTING FUNCTION

CONVERT

E – VOLTAGE
I – CURRENT
P – PNEUMATIC
A – ANALOG
B – BINARY

H – HYDRAULIC
O – ELECTROMAGNETIC, SONIC
R – RESISTANCE (ELECT.)
D – DIGITAL
PF – PULSE FREQUENCY

COMPUTE

SUMMING
SUBTRACTOR
MUTIPLYING
DIVIDING
ROOT EXTRACTION
PROPORTIONAL
DERIVITIVE
AVERAGING
RATIO
DIFFERENCE
HIGH SELECTING
LOW SELECTING
INTEGRAL

(XXX) DESIGNATIONS OF CONTROL FUNCTIONS ASSOCIATED INSTRUMENT OR OTHER COMPONENTS.

AC – AUTO/CLOSE
AHC – AUTO/HOLD/CLOSE
AM – AUTO/MANUAL
DEV – DEVIATION
HOA – HAND/OFF/AUTO
HOR – HAND/OFF/REMOTE
LOS – LOCKOUT STOP
LR – LOCAL/REMOTE
MOA – MANUAL/OFF/AUTO
OO – ON/OFF
OCA OPEN/CLOSE/AUTO

OSC – OPEN/STOP/CLOSED
POT – POTENTIOMETER
RST – RESET
RL – RAISE/LOWER
RSL – RAISE/STOP/LOWER
SD – SHUTDOWN
SEL – SELECT
SP – SET POINT
SR – START/RESET
SS – STOP/START
WA WARNING ALARM

ISA FUNCTION IDENTIFICATION TABLE

	FIRST–LETTER		SUCCEEDING–LETTERS		
	MEASURED OR INITIATING VARIABLE	MODIFIER	READOUT OR PASSIVE FUNCTION	OUTPUT FUNCTION	MODIFIER
A	ANALYSIS		ALARM		
B	BURNER, COMBUSTION				
C	CONDUCTIVITY			CONTROL	CLOSED
D	DENSITY	DIFFERENTIAL			
E	VOLTAGE		SENSOR (PRIMARY ELEMENT)		
F	FLOW RATE	RATIO (FRACTION)			
G	GAGE		GLASS, VIEWING DEVICE		
H	HAND				HIGH
I	CURRENT (ELECTRICAL)		INDICATE		
J	POWER	SCAN			
K	TIME, TIME SCHEDULE	TIME RATE OF CHANGE		CONTROL STATION	
L	LEVEL		LIGHT		LOW
M	MOTOR, MOISTURE	MOMENTARY			MIDDLE, INTERMEDIATE
N	TORQUE		ISOLATE	ISOLATOR	
O			ORIFICE, RESTRICTION		OPEN
P	PRESSURE, VACUUM		POINT (TEST) CONNECTION		
Q	QUANTITY	INTEGRATE, TOTALIZE			
R	RADIATION		RECORD		
S	SPEED, FREQUENCY	SAFETY		SWITCH	
T	TEMPERATURE			TRANSMIT	
U	MULTIVARIABLE		MULTIFUNCTION	MULTIFUNCTION	MULTIFUNCTION
V	VIBRATION, MECHANICAL ANALYSIS			VALVE, DAMPER, LOUVER	
W	WEIGHT, FORCE		WELL		
X	RUN	X AXIS		COMPUTE, CONVERT	
Y	EVENT, STATE OR PRESENCE	Y AXIS		DRIVER, ACTUATOR, FINAL	
Z	POSITION, DIMENSION	Z AXIS		CONTROL ELEMENT	

TYPICAL:
FORMAT

TIC–1 – INSTRUMENT IDENTIFICATION OR TAG NUMBER
TIC – FUNCTIONAL IDENTIFICATION
T – FIRST–LETTER
IC – SUCCEEDING–LETTER(S)
1 – LOOP NUMBER

EXPANDED:
FORMAT

10–PAH–1A — TAG NUMBER
10 — OPTIONAL PREFIX
A — OPTIONAL SUFFIX

UNDEFINED INTERLOCK DEVICE

FIRST LETTER — SUCCEEDING LETTER — SUCCEEDING LETTER — TIC 1 — INSTRUMENT LOOP NUMBER — (INSTRUMENT SYMBOLS)

INPUT/OUTPUT INTERFACE SYMBOLS

= DIGITAL OUTPUT
= ANALOG OUTPUT
= DIGITAL INPUT
= ANALOG INPUT

MECHANICAL EQUIPMENT SYMBOLS

SUMP PUMP
MOTOR
CENTRIFUGAL PUMP
VERTICAL TURBINE PUMP
TANK
BLOWER
VFD — VARIABLE FREQUENCY DRIVE CABINET
MIXER OR FLOCCULATOR
COMPRESSOR

PROCESS AND SIGNAL LINE SYMBOLS

PRIMARY PROCESS LINE
SECONDARY PROCESS LINE
INSTRUMENT OR CONNECTION TO PROCESS (1)
ELECTRIC SIGNAL
ELECTRIC ANALOG SIGNAL (4–20 ma, 1–5 Vdc, etc.)
PF — ELECTRIC PULSE FREQUENCY SIGNAL (0–100 CYCLE/SEC., 0–150 PULSE/MIN., etc.)
PD — ELECTRIC PULSE DURATION SIGNAL (15 SEC., 3/12 SEC = 0 %, etc.)
PNEUMATIC SYMBOL (2)
HYDRAULIC SYMBOL
CAPILLARY TUBE
ELECTROMAGNETIC OR SONIC SIGNAL (3)
INTERNAL SYSTEM LINK (SOFTWARE OR DATA LINK)
MECHANICAL LINK
CONNECTING LINES
FIELD INSTRUMENT/ DEVICE

(1) REFER TO DWG G–2 FOR PIPING ABBREVIATION

(2) THE PNEUMATIC SIGNAL SYMBOLS APPLIES TO A SIGNAL, NOT A SUPPLY SOURCE, USING ANY GAS AS A MEDIUM. IF A GAS OTHER THAN AIR IS USED, THE GAS IS IDENTIFIED BY A NOTE ON THE SIGNAL.

(3) ELECTROMAGNETIC PHENOMENA INCLUDE HEAT, RADIO WAVES, NUCLEAR RADIATION, AND LIGHT.

GENERAL NOTES

1. ADDITIONAL INSTRUMENTATION AND CONTROL SYMBOLS MAY BE USED AS REQUIRED. SYMBOLS AND NOMENCLATURE ARE BASED ON ISA STANDARDS S5.1, S5.2, S5.4.
2. SEE ASSOCIATED ELECTRICAL AND MECHANICAL SYMBOL SHEETS FOR ADDITIONAL SYMBOLS AND ABBREVIATIONS.
3. FOR PIPE SIZES, MATERIAL, AS WELL AS DETAILS OF METER COUPLING AND OTHER MECHANICAL EQUIPMENT (E.G. VALVE, PUMP ETC.) SEE PROCESS AND INSTRUMENTATION DIAGRAMS, MECHANICAL DRAWINGS AND SPECIFICATIONS.
4. POWER SUPPLIES FOR LOOPS OR SYSTEMS SHALL BE FURNISHED BY THE INSTRUMENTATION MANUFACTURER TO MEET THE PARTICULAR CHARACTERISTICS (E.G. VOLTAGE AND CURRENT REQUIREMENTS) OF COMPONENTS IN EACH LOOP OR SYSTEM.
5. THOSE ITEMS IDENTIFIED BY AN ASTERISK SHALL BE PROVIDED BY THE SYSTEM PROCESS EQUIPMENT SUPPLIER.

HIS
YC
DO
EXHAUST
S
IAS
1/4" NYLON AIR TUBING

TYP. AIR ACTUATED VALVE CONTROL DETAIL

VALVE AND ACTUATOR SYMBOLS

GATE VALVE
THREE WAY VALVE
PLUG VALVE
BALL VALVE
BUTTERFLY VALVE
CHECK VALVE
DOUBLE FLAP CHECK VALVE
NEEDLE VALVE
BALANCING VALVE
GLOBE VALVE
AIR RELEASE VALVE
PRESSURE RELEASE VALVE
VACUUM RELIEF VALVE
PRESSURE REDUCING VALVE
BACK PRESSURE REGULATING VALVE
VALVE WITH DIAPHRAGM OPERATOR
SV — SOLENOID VALVE
M — VALVE WITH MOTOR OPERATOR
VALVE WITH PISTON OPERATOR
VALVE WITH PRESSURE BALANCED OPERATOR
QUICK COUPLER
PINCH VALVE

DEVICE SYMBOLS

ROTOMETER
THERMOMETER
MANUAL SAMPLER
INJECTOR
FILTER
DRAIN
MANUAL AIR VENT
BLIND FLANGE CAP OR PLUG
STRAINER
WATER SURFACE ELEVATION
LE/LT XXXX — ULTRA SONIC LEVEL SENSOR
LE/LT XXXX — CAPACITANCE LEVEL PROBE
PROPELLER FLOW METER
REDUCER OR INCREASER
SLUICE GATE
SLIDE GATE (NORMALLY OPEN)
SLIDE GATE (NORMALLY CLOSED)
FLAP GATE
STOP GATE
CHEMICAL DIFFUSER
PULSATION DAMPER
STATIC MIXER
CALIBRATION CHAMBER

DRAFT

REV	DESCRIPTION	ENGR	DATE	APPD	DATE

PROGRESS: PRELIMINARY DESIGN
SUBMITTAL DATE: 4/10/10
PROJECT MANAGER: S. BAHDRA
DESIGNED BY: M. HILL
DRAWN BY: M. HILL
CHECKED BY: T. FALK

PLANS PREPARED BY:
DUDEK
605 Third Street Encinitas, CA 92024
760.942.5147 Fax 760.942.4508

City Of Guadalupe
Public Works Dept.
918 Obispo Street, Guadalupe, California 93434
Tel 805-356-3891 Fax 805-343-5512

WASTEWATER TREATMENT PLANT IMPROVEMENT

GENERAL NOTES, SYMBOLS, AND ABBREVIATIONS

DWG. P&ID 1
PROJECT NO. 6576
SHT. NO. 1 OF 5

P:\101.Engineering\Guadalupe, City of\6576–Wastewater Treatment Plant\06 Design Data\CAD6576\dwg\6576 PID 4/20/2010 3:34 PM

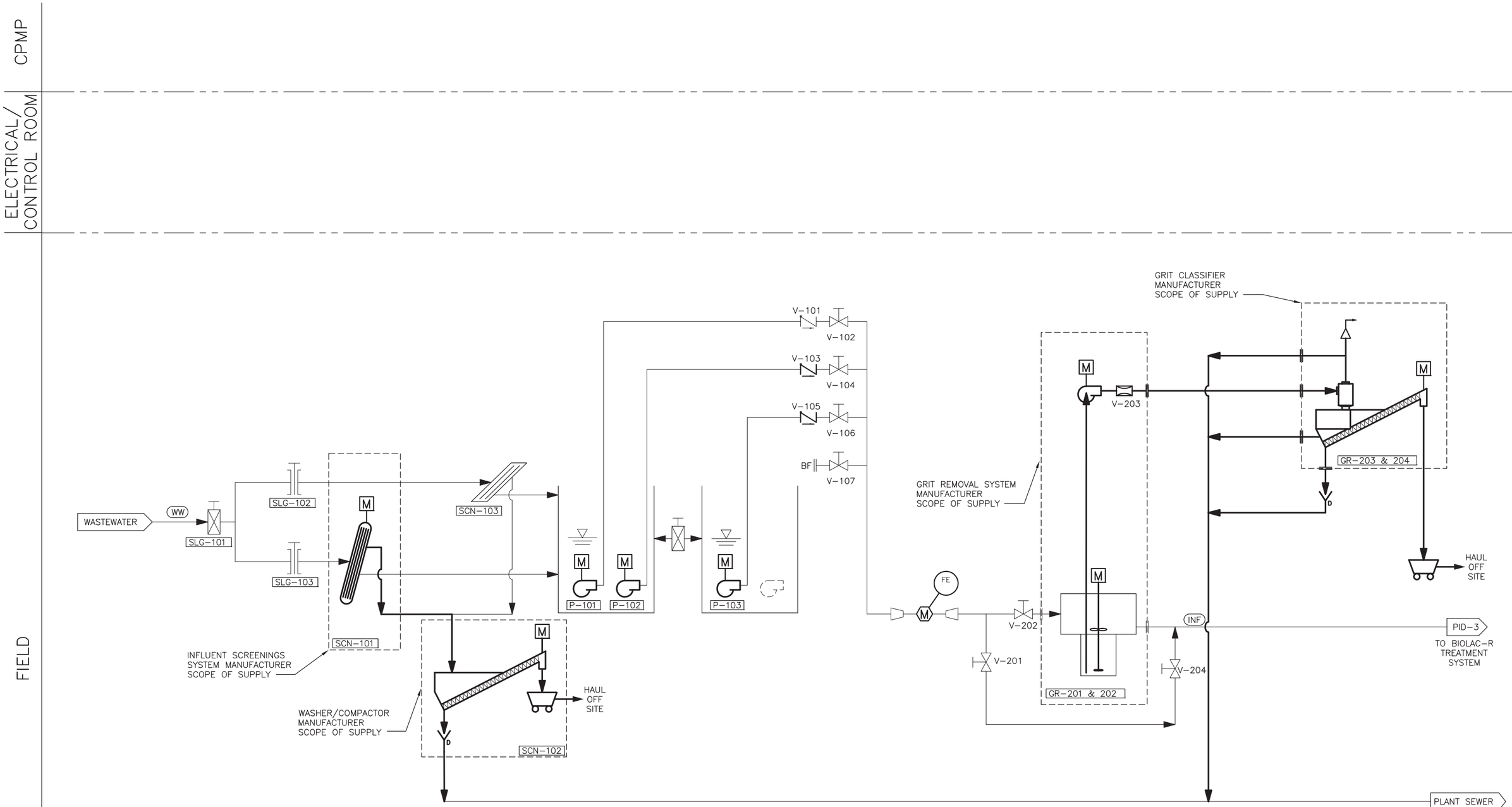

DRAFT

REV	DESCRIPTION	ENGR	DATE	APPD	DATE

PROGRESS: PRELIMINARY DESIGN
SUBMITTAL DATE: 4/10/10
PROJECT MANAGER: S. BAHDRA
DESIGNED BY: M. HILL
DRAWN BY: M. HILL
CHECKED BY: T. FALK

PLANS PREPARED BY:
DUDEK
605 Third Street Encinitas, CA 92024
760.942.5147 Fax 760.942.4508

City Of Guadalupe
Public Works Dept.
918 Obispo Street, Guadalupe, California 93434
Tel 805-356-3891 Fax 805-343-5512

WASTEWATER TREATMENT PLANT IMPROVEMENT

HEADWORKS AND GRIT REMOVAL SYSTEM

DWG. P&ID 2
PROJECT NO. 6576
SHT. NO. 2 OF 5

P:\101.Engineering\Guadalupe, City of\6576-Wastewater Treatment Plant\06 Design Data\CAD6576\dwg\6576 PID 4/20/2010 3:35 PM

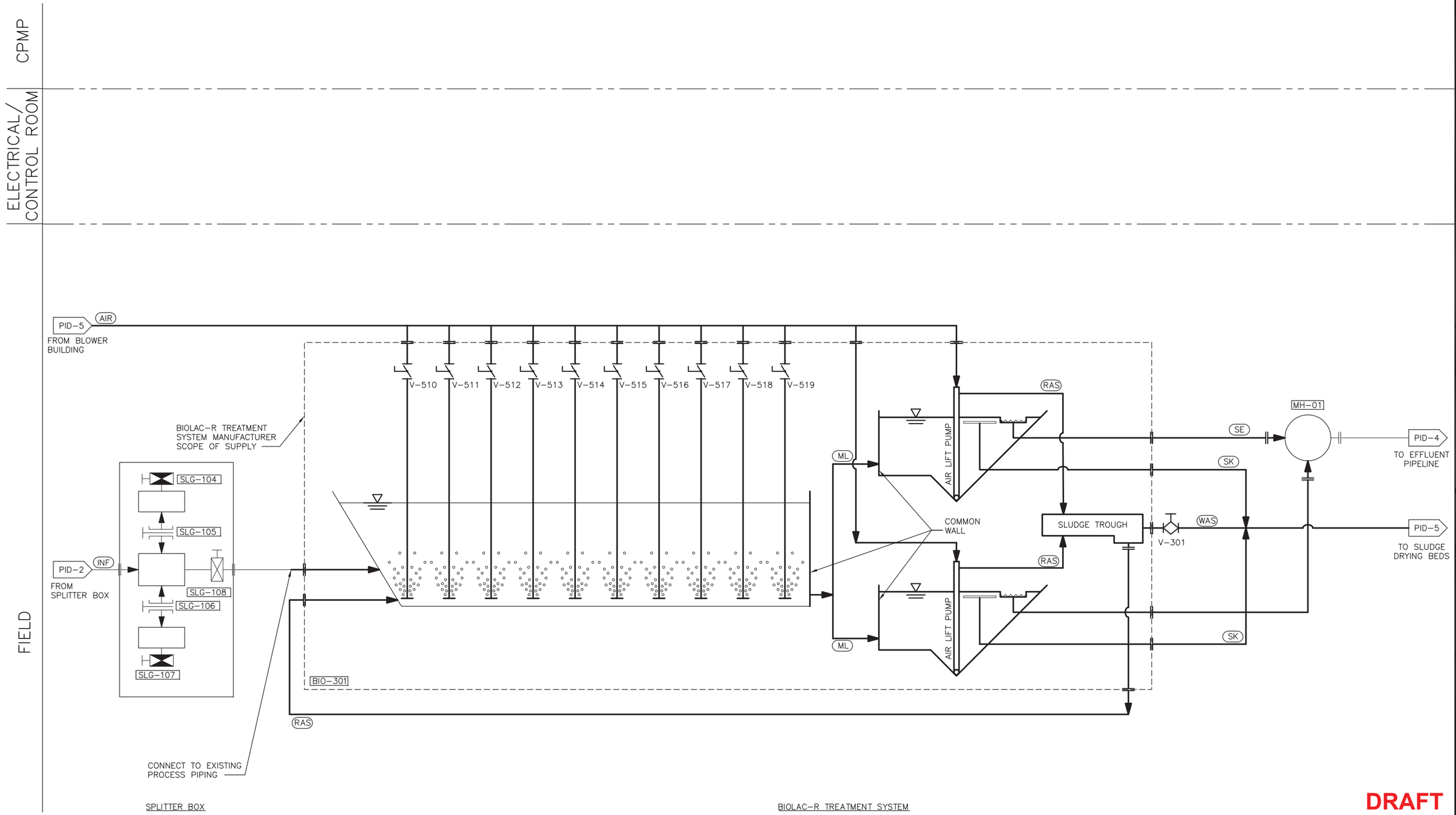

REV	DESCRIPTION	ENGR	DATE	APPD	DATE

PROGRESS: PRELIMINARY DESIGN
SUBMITTAL DATE: 4/10/10
PROJECT MANAGER: S. BAHDRA
DESIGNED BY: M. HILL
DRAWN BY: M. HILL
CHECKED BY: T. FALK

PLANS PREPARED BY:
DUDEK
605 Third Street Encinitas, CA 92024
760.942.5147 Fax 760.942.4508

City Of Guadalupe
Public Works Dept.
918 Obispo Street, Guadalupe, California 93434
Tel 805-356-3891 Fax 805-343-5512

WASTEWATER TREATMENT PLANT IMPROVEMENT

BIOLAC-R TREATMENT SYSTEM

DWG. P&ID 3
PROJECT NO. 6576
SHT. NO. 3 OF 5

P:\101 Engineering\Guadalupe, City of\6576-Wastewater Treatment Plant\06 Design Data\CAD6576\dwg\6576 PID 4/20/2010 3:36 PM

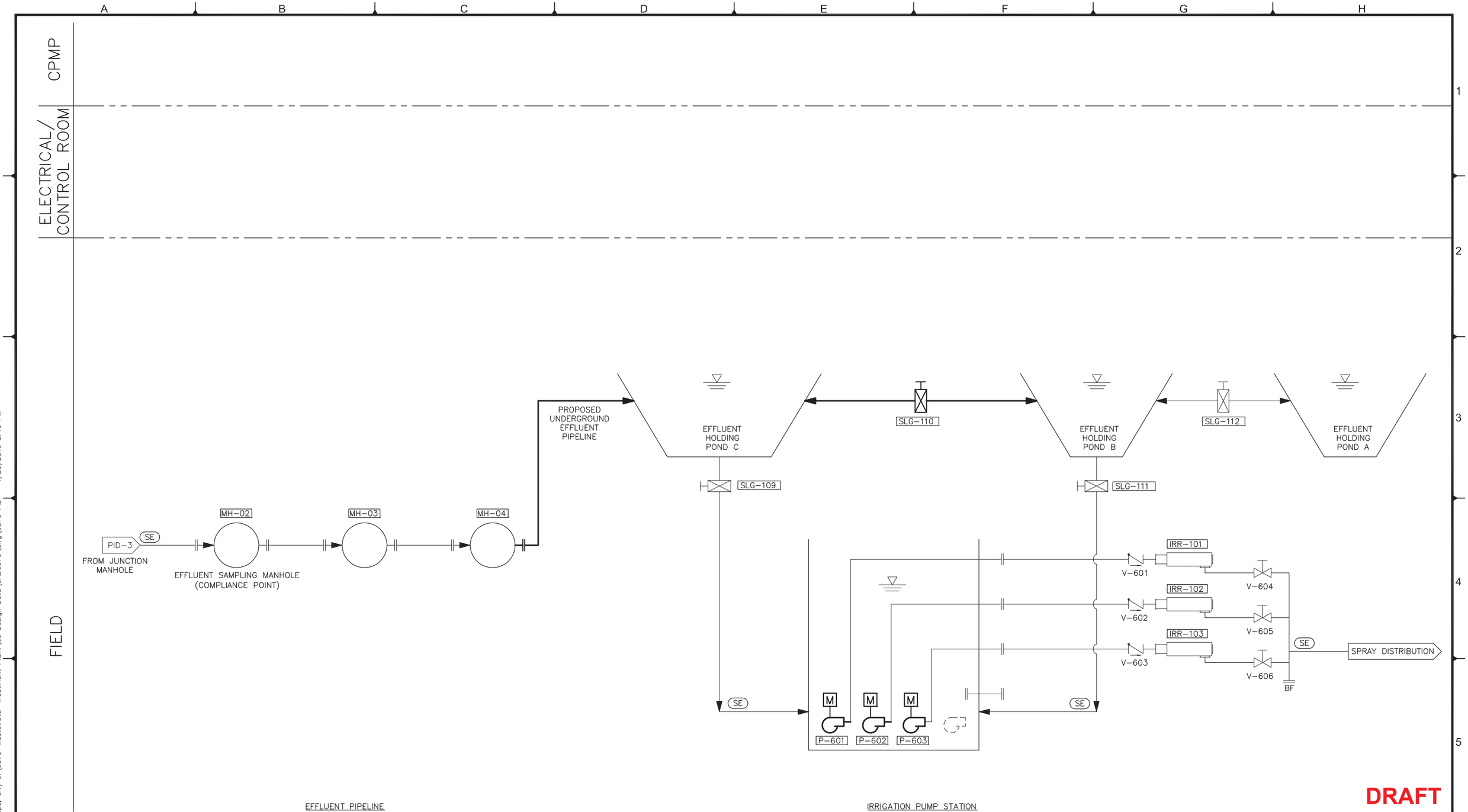

DRAFT

REV	DESCRIPTION	ENGR	DATE	APPD	DATE

PROGRESS: PRELIMINARY DESIGN
SUBMITTAL DATE: 4/10/10
PROJECT MANAGER: S. BAHDRA
DESIGNED BY: M. HILL
DRAWN BY: M. HILL
CHECKED BY: T. FALK

PLANS PREPARED BY:
DUDEK
605 Third Street Encinitas, CA 92024
760.942.5147 Fax 760.942.4508

City Of Guadalupe
Public Works Dept.
918 Obispo Street, Guadalupe, California 93434
Tel 805-356-3891 Fax 805-343-5512

WASTEWATER TREATMENT PLANT IMPROVEMENT

EFFLUENT PIPELINE, HOLDING PONDS, AND IRRIGATION PUMP STATION

DWG. P&ID 4
PROJECT NO. 6576
SHT. NO. 4 OF 5

P:\101.Engineering\Guadalupe, City of\6576-Wastewater Treatment Plant\06 Design Data\CAD6576\dwg\6576 PID 4/20/2010 3:40 PM

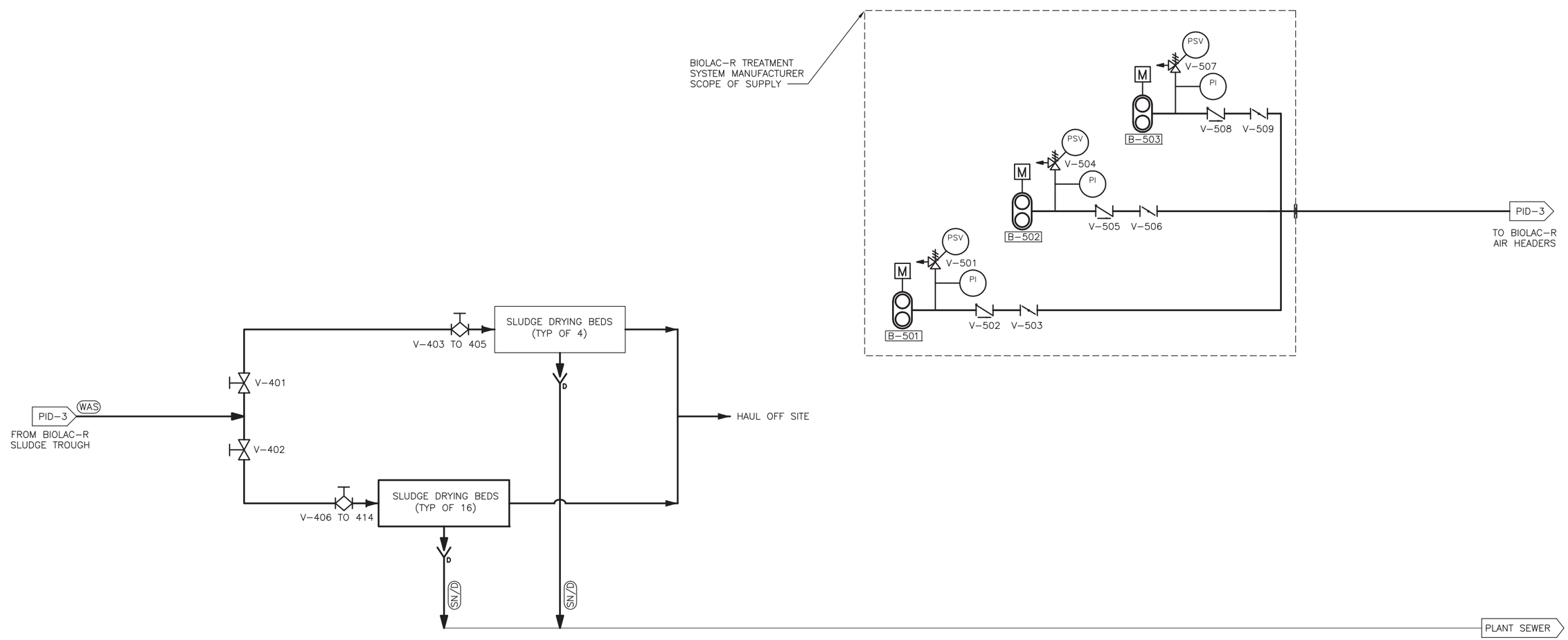

DRAFT

REV	DESCRIPTION	ENGR	DATE	APPD	DATE

PROGRESS: PRELIMINARY DESIGN
SUBMITTAL DATE: 4/10/10
PROJECT MANAGER: S. BAHDRA
DESIGNED BY: M. HILL
DRAWN BY: M. HILL
CHECKED BY: T. FALK

PLANS PREPARED BY:
DUDEK
605 Third Street Encinitas, CA 92024
760.942.5147 Fax 760.942.4508

City Of Guadalupe
Public Works Dept.
918 Obispo Street, Guadalupe, California 93434
Tel 805-356-3891 Fax 805-343-5512

WASTEWATER TREATMENT PLANT IMPROVEMENT

SLUDGE DRYING BEDS AND BLOWER ASSEMBLY

DWG. P&ID 5
PROJECT NO. 6576
SHT. NO. 5 OF 5

P:\101.Engineering\Guadalupe, City of\6576-Wastewater Treatment Plant\06 Design Data\CAD6576\dwg\6576 PID 4/20/2010 3:41 PM

Technical Memorandum 2

Basis of Design

DRAFT

Prepared for

City of Guadalupe

Wastewater Treatment Plant Improvement Project

Prepared By

DUDEK

Date
August 2010

DRAFT

TABLE OF CONTENTS

1 Introduction 4
1.1 Background 4
1.2 Purpose of this Document 4
1.3 Influent Wastewater Quality 4
1.4 Effluent Wastewater Requirements 5
1.5 Hydraulic Design Criteria 5
2 Site Development 6
2.1 Layout of Facilities 6
2.2 Facility Improvement Phasing 6
2.3 Phase I Improvements 6
2.4 Phase II Improvements 7
2.5 Future Improvements 8
3 Process selection 8
3.1 Problems at the Existing Plant 8
3.2 Intermediate Solutions 9
3.3 Recommended Long-term Solution 10
4 Design Packages 15
4.1 Headworks 15
4.1.1 Mechanical 15
4.1.1.1 Bar Screens 15
4.1.1.2 Washer/Compactor 15
4.1.1.3 Influent Pump Station 16
4.1.2 Civil and Structural 16
4.1.3 Electrical and Control 17
4.1.3.1 Bar Screen and Washer Compacter 17
4.1.3.2 Influent Pumps 17
4.1.3.3 Flow Measurement 18
4.1.4 Hydraulics 18
4.1.4.1 Wet Well 18
4.1.4.2 Bar Screen Channel 19
4.1.4.3 Pump Station Force Main 19
4.2 Grit Removal System Upgrade 20
4.2.1 Mechanical 20
4.2.1.1 Rotating Propeller System 20
4.2.1.2 Grit Pump and Piping 20
4.2.1.3 Grit Classifier 21
4.2.2 Civil and Structural 21
4.2.3 Electrical and Control 22
4.2.4 Hydraulics 22
4.3 AIPS pond conversion to Biolac® system 23
4.3.1 Process Design 23
4.3.2 Mechanical 24
4.3.2.1 Influent and Effluent Biolac® Piping 24

DRAFT

4.3.2.2 Aeration Equipment 24
4.3.2.3 Activated Sludge Piping 25
4.3.3 Civil and Structural 25
4.3.4 Electrical and Control 26
4.3.5 Hydraulics 27
4.4 Sludge Handling Facilities 27
4.4.1 Mechanical 28
4.4.1.1 WAS Pump Station 28
4.4.1.2 Sludge Dewatering Screw Press 29
4.4.2 Hydraulics 29
4.4.3 Civil and Structural 29
4.4.4 Electrical and Control 30
4.5 Site Services 30
4.5.1 Civil 30
4.5.2 Plant Electrical 30
4.5.3 Plant Controls 31
4.5.4 Site Security 31
4.5.5 Roadways 31
4.5.6 Stormwater Drainage 32
5 Maintenance of Plant Operation during Construction 32
5.1 Headworks 32
5.2 Grit Removal System 32
5.3 Biolac® Treatment System 32

TABLES

Table 1 - Influent Wastewater Characteristics 5
Table 2 - Effluent Wastewater Requirements 5
Table 3 – Wastewater Flow Rates 5
Table 4 – Oxidation Ditch Feasibility Evaluation Summary 12
Table 5 – Aeromod SEQUOX® Feasibility Evaluation Summary 13
Table 6 – Biolac® Feasibility Evaluation Summary 14
Table 7 - Mechanically Cleaned Bar Screen 15
Table 8 - Screenings Washer/Compacter 16
Table 9 - Influent Pumps 16
Table 10 - Wet Well Water Level Controls 18
Table 11 - Wet Well Water and Structure Elevations 18
Table 12 - Bar Screen Channel Depths 19
Table 13 - Force Main Data 19
Table 14 - Influent Pump Station Operating Points 19
Table 15 - Grit Chamber Rotating Propeller System 20
Table 16 - Grit Pump and Piping 21
Table 17 - Grit Concentrator, Classifier, and Drainage Piping 21
Table 18 - Grit Piping Hydraulics 22
Table 19 – Biolac® Sizing 23

DRAFT

Table 20 - Biological Treatment Conditions 24
Table 21 - Aeration Equipment 25
Table 22 - Activated Sludge Piping 25
Table 23 - Pond 3 Earthwork Summary 26
Table 24 - Effluent Weir and Trough Data 27
Table 25 - Sludge Dewatering Alternatives 28
Table 26 - Sludge Feed Pumps and Piping 28
Table 27 - Screw Press 29
Table 28 - WAS Force Main 29
Table 29 – Asphalt Rehabilitation 30

APPENDICES

Appendix A – Bar Screen Data Sheet
Appendix B – Influent Pump Data Sheets
Appendix C – Grit Removal System Data Sheets and Drawings
Appendix D – Biological Treatment System Data Sheet and Calculations
Appendix E – Aeration Blower Data Sheets
Appendix F – Pre-Engineering Building
Appendix G – Progressive Cavity Pump Data Sheet and Drawings
Appendix H – Sludge Dewatering Screw Press Data Sheets
Appendix I – Engineer's Opinion of Probable Construction Cost (30%)

DRAFT

1 INTRODUCTION

1.1 Background

The City of Guadalupe, CA owns and operates the Guadalupe Wastewater Treatment Plant (WWTP) located at 5125 W. Main Street, Guadalupe, CA 93434 (Latitude N 3457.738, Longitude W 12035.451). The City is required to operate their WWTP in compliance with the Waste Discharge Requirement (WDR) permit Order No. R3-2005-0015 as issued by the California Regional Water Quality Control Board (RWQCB), Central Coast Region. The Guadalupe WWTP has had ongoing WDR violations of Biological Oxygen Demand (BOD) and Total Suspended Solids (TSS) levels since 2005. Through Prop 50 grant funding, the City is financing improvements to the WWTP that will ensure the compliance with the WDR.

1.2 Purpose of this Document

The objective of the project is to renovate the existing Guadalupe WWTP to reliably treat the influent wastewater and consistently produce effluent compliant with the WDR permit. Technical Memorandum 1 (TM1) summarized the alternatives and provided recommendations to this end. The outcome of that memorandum was a definition of the project scope that satisfies the project objective to gain reliable compliance to the requirements of the WDR within the grant funding limitations; those improvements were designated as Phase I. The remaining improvements identified in TM1, while important for long-term reliability, were designated as Phase II and will be considered at a later date when supplemental funding can be secured.

The purpose of this document, Technical Memorandum 2 – Basis of Design, is to present design criteria, confirm process selection, and highlight specific design details for Phase I. Specifically, TM2 presents equipment sizing, plant layout, hydraulic design, process and equipment design criteria, equipment selection, and major systems plan for Final Design.

TM2 is submitted as the final deliverable in the preliminary design development scope of work. Accompanying this memorandum are 30% design drawings, a preliminary list of project specifications, and preliminary cost estimate. The accompanying documents are complimentary to this memorandum and reference is made to them throughout the following narrative. Following the City's acceptance of the preliminary design conclusions, final construction documents will be prepared.

1.3 Influent Wastewater Quality

The design influent wastewater parameters are given in Table 1.

DRAFT

Table 1 - Influent Wastewater Characteristics

Parameter	Unit	Value
Biochemical Oxygen Demand (BOD-5)	mg/L	300
Total Suspended Solids (TSS)	mg/L	300
Total Kjeldahl Nitrogen (TKN) (assumed)	mg/L	50
Ammonia as Nitrogen (assumed)	mg/L	35
pH	-	7.7
Alkalinity (assumed)	mg/L	410

1.4 Effluent Wastewater Requirements

The effluent discharge limitations in the WDR for the Guadalupe WWTP are given in Table 2.

Table 2 - Effluent Wastewater Requirements[1]

Constituent	Units	Monthly Average	Daily Maximum
Flow	MGD	0.96	-
Settleable Solids	mL/L	0.2	0.5
BOD, 5-Day	mg/L	60	100
Suspended Solids	mg/L	60	100
Total Dissolved Solids	mg/L	1500	-
Sodium	mg/L	230	-
Chloride	mg/L	230	-
pH	Within the range 6.5 – 8.4		

1.5 Hydraulic Design Criteria

The hydraulic design of the Guadalupe WWTP is based on the existing hydraulic profile and site topography. Following the headworks, wastewater flows through each treatment process by gravity. The wastewater flow rates are shown in Table 3.

Table 3 – Wastewater Flow Rates

Parameter	Units	Current[2]	WDR Limit	Design
Average Daily Flow (ADF) Rate	mgd	0.60	0.96	0.96
Maximum Daily Flow Rate	mgd	1.04	-	1.66[3]
Peak Hour Flow (PHF) Rate[4]	mgd	1.92	-	2.88
Minimum Daily Flow Rate[5]	mgd	0.18	-	0.48

[1] WDR permit as issued by the California RWQCB, Central Coast Region, as Order No. R3-2005-0015, pg 4

[2] Average and maximum daily flow rates were determined from monthly monitoring reports, Jan 2004 – Dec 2009. Monthly reports are based on daily flow measurements taken at approximately 10:00 AM each day. Diurnal flow data is not available.

[3] Assumed same correlation between average daily flow and maximum daily flow observed at current flow conditions.

[4] Peaking factor determined from *Recommended Standards for Wastewater Facilities*, 2004 edition.

[5] Value assumed due to lack of flow data; minimum flow rate equal to 30% of average flow rate, *Wastewater Engineering*, Metcalf & Eddy, third edition.

DRAFT

The existing hydraulic structures and piping are sized appropriately to handle design peak hourly flows and do not require upsizing. The return flow rates from the filtrate of the screenings, grit, and sludge dewatering systems will be assumed to be negligible. The existing and proposed hydraulic profiles are shown in Drawing G-3. The individual hydraulic design of each unit process is presented in Section 4 of this document.

2 SITE DEVELOPMENT

2.1 Layout of Facilities

With the intent to maximize existing plant infrastructure, most of the proposed improvements will be implemented with only minor changes to the existing plant layout. Facility upgrades will be the result of rehabilitating or upgrading existing systems and structures. The only new process unit at the facility is the new sludge handling facilities which will be constructed near the existing sludge drying beds on the west end of the plant near the WWTP entrance.

AIPS Pond 3 will be converted to the Biolac® treatment system. Ponds 2 and 4 will provide up to 8.8 million gallons of effluent storage. Pond 1 can be used either to store 3.3 million gallons of effluent or sludge during emergency conditions. The proposed layout is shown in Drawing C-4.

2.2 Facility Improvement Phasing

TM1 – Conceptual Design Report provided a detailed investigation and needs assessment for the existing facility recommending a comprehensive overhaul of the facility to modernize and improve reliability. Given the project funding constraints, the identified improvements were prioritized to maximize value of the available funding. TM1 recommended Near Term Project improvements hereinafter referred to as Phase 1 Improvements to best address project objectives relative to delivering a facility that can consistently maintain WDR compliance. The remaining facility needs identified in TM1 are considered Phase 2 improvements. Expansion or upgrades to produce recycled water have been considered in preliminary design development and are summarized in Future Improvements.

Descriptions of Phase 1 Improvements, Phase 2 Improvements, and Future Improvements are presented in the following sections. Only Phase 1 Improvements for which funding is immediately available will be implemented at this time. The City is investigating supplemental funding sources that may facilitate implementation of Phase 2 Improvements. Future Improvements should be considered when market analysis justifies the expenditures.

2.3 Phase 1 Improvements

The WWTP planned improvements for Phase 1 (current project) are:

- Headworks
  - Replace the comminutor with one mechanically cleaned bar screen and a washer/compactor system, retain existing manually cleaned bar rack.
  - Replace submersible pumps, mounting system, and install new water level sensors.

DRAFT

  - Replace necessary valves, piping, and repaint influent piping manifold.
  - New VFD, air conditioning, dust control, and enclosure.
- Grit Removal System upgrade
  - Installation of a new propeller drive system and top-mounted grit pump in existing structure.
  - Installation of new grit classifier.
  - Installation of new grit piping.
  - Will be bid as an alternate.
- AIPS pond conversion to Biolac® system
  - Reshaping of Pond No. 3 and installation of diffusers and the
  - Construction of two integral clarifiers.
  - New aeration blowers and enclosure.
  - Installation of necessary pipe work.
- Sludge Handling Facilities
  - Waste activated sludge (WAS) pumps.
  - New sludge dewatering screw press system.
  - Installation of necessary pipe work.
- Site Services
  - Extension of sewer, water, and electrical lines and facilities as necessary.
  - Gravel road from Main Street to the plant.

The proposed process flow diagram is shown in Drawing G-4. The above mentioned improvements are described in details In Section 4 Design Packages.

2.4 Phase II Improvements

The remainder of the project as defined in TM 1 as Phase II shall be built at a latter date and comprises of the following scope of work:

- Effluent Pipe and Holding Ponds
  - Install piping system to directly connect plant effluent to storage ponds
  - Restore the eroded holding ponds
  - Refurbish the equalization between three holding ponds
- Irrigation Pump Station
  - Replace existing three submersible pumps and filters
  - New electrical building and equipment, and telemetry to plant

DRAFT

  - New pump crane
  - New fencing around pump station
- Spray Distribution System
  - Aeration of pasture
  - New Sprinkler system
  - New underground laterals and isolation valves
- Site Services such as demolition and removal of existing debris from the plant, enhanced electrical and instrumentation, SCADA, security systems, paved road to the facility.

2.5 Future Improvements

The current design is limited to the WDR prescribed limits for flow and effluent quality. However, there is sufficient space available for future expansion. Based on the population projections, the hydraulic capacity of 0.96 MGD will sustain to 2031. After that, the plant may need capacity upgrades and a parallel reactor basin could be built similar to proposed design mirrored on Pond 1.

With recycled water gaining acceptance in California, this plant will also be well suited for a future upgrade to meet the criteria for reuse. For that, the plant will require upgrade to tertiary treatment, followed by disinfection processes. The plant upgrades for water reuse would involve the following:

- Change of operation of the Biolac® pond to alternate aeration to achieve alternate anoxic and oxic zones to enable tertiary treatment and production of higher quality effluent.
- Effluent could then be filtered through an acceptable Title 22-approved filtration technology such as a granular media filtration, or a cloth filter; and then disinfected by ultraviolet (UV) light or chlorine to meet the required pathogen inactivation.

3 PROCESS SELECTION

3.1 Problems at the Existing Plant

The Guadalupe WWTP effluent has regularly exhibited TSS and BOD levels resulting in violations of the City's WDR. The following problems identified during site visits in July and August 2010 are presumably contributing factors to the plant's performance issues:

- Headworks Deficiencies – Excess rags and floating debris has accumulated in the first two AIPS ponds (1 and 2) due to the mechanical deficiencies in headworks facility. Rags and debris that was not removed at the headworks were found to clog the AIPS surface aerators and render them inoperable. Rags also contribute to nuisance conditions leading to odor emissions from the plant.

DRAFT

- Inoperable Grit Removal System – The grit removal system is not operating which may be causing a decrease in treatment capacity due to grit accumulation in the AIPS ponds (See TM1 for details).
- Algae Growth – Substantial growth of green and blue-green algae has occurred in all the AIPS ponds and final effluent with particularly high growth in the final ponds (AIPS Ponds 3 and 4). This is due in part to extended hydraulic retention times in the final ponds.
- Blue-green algae (BGA) – BGA is not actually algae, but a primitive bacterial form that looks like algae and is often confused with the appearance of sludge. Its significance is that it creates nuisance conditions of high TSS, foul odors and toxicity to preferred life forms. The presence of BGA indicates a shallow oxic layer and thus poor circulation of water in the ponds and poor aeration. This can result in less treatment of soluble BOD and the potential for significant odor generation. Unfortunately, improving circulation and aeration to the necessary level cannot be performed economically or effectively with the current surface aerators.
- Aerators – Some of the AIPS surface aerators appear to be out of service due to damage to the gear drives. The aerators are reportedly obsolete and new gear drives would have to be fabricated.
- Aeration Strategy – The AIPS aerators are controlled by signals from DO sensors in the ponds whereby a low DO signal calls for the aerators to activate and a high DO signal deactivates the aerators. Theoretically, DO is decreased by biological demand associated with bacterial activity on influent BOD and supplementary aeration is needed to provide sufficient oxygen for BOD stabilization. The current operations strategy of the system generates more algae than appropriate, which is measured as TSS and BOD in the effluent. Furthermore, the current DO operating range is lower than typical AIPS.
- Recirculation – The AIPS recirculation pumps transfer water from ponds 3 and 4 to ponds 1 and 2 and are set to run for a short period of time each morning before daylight. Lower DO levels occur in AIPS during unlit periods of the day such as early morning. Therefore, water with low DO levels is currently being returned to the beginning of the AIPS. Recirculation is typically performed during daylight which reduces aerator demand.
- Outlet Depths – The outlets for AIPS Ponds 1 and 2 are at a depth which is likely drawing water that is less treated and containing higher levels of CO_2. Drawing effluent with these characteristics from Ponds 1 and 2 will increase algae growth in the ponds 3 and 4.

3.2 Intermediate Solutions

While various immediate and intermediate operation modifications have been discussed and are being implemented, the long-term corrective action as recommended in TM1 is conversion of the AIPS ponds to the extended aeration process defined as Biolac®.

DRAFT

Immediate and intermediate measures for City consideration include the following:

- Sampling and Monitoring – Focused sampling and monitoring of influent and effluent with regular measurements of BOD, total suspended solids, pH, TKN, nitrite-N, turbidity, and microscopic exam at each pond. This will help characterize the conditions and performance of the ponds and will serve as a basis for adjusting and evaluating the effectiveness of various recommendations and decisions until the full-scale plant is constructed.
- Headworks Optimization – Optimal grit and rag removal should be a very high priority for the current plant operations.
- Pond 3 Bypass – Redirect effluent from Pond 1 to Pond 4 so that Pond 3 is bypassed. This will reduce the hydraulic retention time in the final Pond which will aid in reducing algae production and TSS and BOD levels.
- Improve Circulation and Aeration – To improve circulation and aeration within the ponds, it is recommended that a different type of aerator such as a SolarBee® be installed. These are not mechanical aerators, but provide oxidation by circulating oxygen generated by a limited growth of algae to a deeper zone of the pond. The unit is sized and adjusted to prevent scouring and oxidation of the anaerobic sludge zones. The oxygen circulated from the surface stimulates and supports bacterial growth, which competes for nutrients needed by algae, thus limiting algal growth. In addition, the circulation of oxygen breaks the life cycle needed by BGA and prevents its growth. These circulators also provide a defined zone for sludge digestion, optimizing sludge reduction.
- Increase DO – The DO set points for the aerators should be increased and the recirculation pumps should be run during daylight and for longer periods of time.
- The outlets for Ponds 1 and 2 should be adjusted so that effluent is drawn from water depth with less CO_2 and improved treatment.
- Bio-Augmentation of sludge digestion by artificially increasing the population of aggressive bacteria that digests the sludge. Sludge digestion requires specific conditions for anaerobic digestion. These conditions determine the natural population of bacteria that decompose and reduce the sludge mass. The major benefit to systems such as this plant is the reduction of sludge mass to avoid dredging and hauling costs in near future. The goal would be to reduce the existing sludge volume to avoid treatment impacts on the ponds and to minimize future cost of sludge removal and disposal. It is common for this approach to reduce sludge volume by 30-50% within a few months.

3.3 Recommended Long-term Solution

While the intermediate steps mentioned above may alleviate the compliance problems for the time being, it cannot be guaranteed to meet the WDR requirements in the long-term. This plant requires adequate preliminary and secondary treatment process that can reduce wastewater organic matter, and the accompanying biological oxygen demand (BOD) and total suspended solids (TSS).

DRAFT

Secondary treatment systems are characterized according to where the process biomass is located. Fixed film systems are processes where the biomass grows on media and the wastewater flows over the media. Trickling filters and rotating biological contactors (RBCs) are examples of fixed-film systems. Suspended growth systems are processes where the raw wastewater is mixed into the biomass slurry, called mixed liquor. Activated sludge systems are the most common example of a suspended growth system. Activated sludge systems can be characterized as "conventional treatment" utilizing primary clarification and anaerobic digestion or "extended aeration" in which all incoming waste load is treated in aeration tanks. Extended aeration facilities are simpler and are typically implemented for smaller facilities where space is less of a concern and a less complex operation is preferred.

Extended aeration, an activated sludge suspended growth secondary treatment process is considered the most feasible for the Guadalupe WWTP given the incoming wastewater characteristics, flowrate, and WDR limitations. The extended aeration processes exhibit a relatively long sludge age, usually greater than 20 days, thereby producing a stabilized sludge waste stream. Numerous extended aeration technologies are available, but not all are considered viable for this facility. Extended aeration alternatives feasible for the Guadalupe WWTP site have been identified considering the existing land area, the ease of operations and maintenance, the use of existing infrastructure, and capital costs. Process technologies that meet these basic criteria include:

- Oxidation ditches
- AeroMod SEQUOX®
- Biolac®

A description of each of these processes follows, with the summary of the evaluation of each type of treatment system.

OXIDATION DITCH An oxidation ditch is an extended aeration activated sludge biological treatment process that employs a long solids retention time (SRT) to stabilize the wastewater. Oxidation ditches are typically arranged in a single or multi-channel configuration within a ring, oval or horseshoe-shaped basin. Surface aerators provide motive force for mixing/circulation, oxygen transfer, and aeration. The oxidation ditch is usually preceded by conventional headworks (e.g. bar screens and grit removal). After passing through the headworks, the wastewater flow enters the oxidation ditch where it is mixed with return sludge from the secondary clarifier and then aerated.

Surface aerators impart dissolved oxygen via surface agitation to promote microbial growth while circulating the mixed liquor. Automated control of DO concentrations is available on some proprietary systems to minimize power requirements and provide process control. The design SRT for oxidation ditches is typically long enough that complete biological nitrification will occur. Because nitrification will occur in a properly aerated oxidation ditch, the process can incorporate unaerated sections that serve as anoxic zones to provide effective denitrification. To encourage biological phosphorus removal, an anaerobic tank can be added upstream of the oxidation ditch as the contact point where the wastewater will first contact the mixed liquor. It is important that nitrate concentrations be minimized in the biological

DRAFT

design to ensure that the anaerobic zone will properly function. The treated effluent from the oxidation ditch is separated from the solids by sedimentation in a secondary clarifier.

Infrastructure for a typical oxidation ditch of this capacity would consist of cast-in-place concrete tanks for the oxidation ditch and secondary clarifiers. The oxidation ditch volume is approximately equal to the treatment capacity to yield a 24-hour hydraulic retention time. Circular secondary clarifiers are commonly employed for solids separation. Surface aerators including vertical turbine mixers or brush rotors are installed at specific points along the oxidation ditch configuration. Circular secondary clarifiers require rotating sludge collectors and substantial return activated sludge (RAS) pumps are necessary with pumping capacity of up to 150% of influent flow. Waste sludge pumps are also required to remove sludge from the system for further processing or dewatering. The feasibility of a oxidation ditch is summarized in Table 4.

Table 4 – Oxidation Ditch Feasibility Evaluation Summary

Advantages	Disadvantages
• Optimal performance can be achieved with low operational requirements • Operation and maintenance costs are low compared to conventional biological treatment processes • Constant water level and continuous discharge improves reliability and performance with low weir overflow rates thereby alleviating periodic effluent surges experienced in other biological processes • Long hydraulic retention time minimize the impact of shock loading or hydraulic surges • Less sludge is produced than conventional biological treatment processes due to extended biological activity during the activated sludge process • Biological nutrient removal can be cost effectively incorporated to design	• Footprint of the oxidation ditch is larger than other activated sludge processes due to the long SRT/HRT requirements for extended aeration. • Large concrete volumes required to construct process tanks compared to other activated sludge processes, which increases capital costs • Surface aerators provide lower oxygen transfer efficiencies compared to fine bubble diffusers resulting in higher electrical operating costs • If nutrient removal is not included in design, substantial total nitrogen can be expected in the effluent which is receiving significant attention from Regional Boards throughout the State. Incorporating nutrient removal adds capital costs which are partially offset by improved operational performance. • Separated tanks (i.e. oxidation ditches and clarifiers) necessitate substantial mechanical sludge recycle pumping adding significant capital and operating costs.

AEROMOD SEQUOX® - The SEQUOX® is an extended aeration process with equipment and tankage configuration patented by Aeromod. The process begins by combining wastewater with return activated sludge (RAS) from the clarifiers in a selector tank. The flow then enters the continuously aerated first stage aeration basins, which provide sufficient hydraulic retention time (HRT) to achieve substantial BOD removal and nitrification. After this step, the mixed liquor flows into the second stage, which includes two parallel reactors where aeration is sequenced on and off between tanks on a programmable cycle. This cycling achieves denitrification by forcing aerobic/anoxic conditions. Nitrification occurs when a tank is receiving air (aerobic) and denitrification occurs when the air is shutoff and the tank becomes anoxic. Both the anoxic and aerobic conditions provide additional BOD removal. The effluent

DRAFT

from the second stage aeration tanks enters the integral clarifiers where the biomass settles and is returned to the selector tank. The clarifier effluent is withdrawn and discharged from the system. Periodically, solids sent from the first stage aeration nitrification tank to the aerobic digesters. The supernatant from the digesters is decanted into the second stage aeration tanks by a fixed overflow weir and the solids are removed for disposal.

Infrastructure for a typical Aeromod plant of this capacity would include a strategically sized, but even number of process trains, configured by rectangular cast-in-place concrete tanks. The process compartments are achieved with internal concrete partition walls. Aeration is delivered with blowers and submerged fine bubble diffusers. Hydraulic movement is achieved with air lift pumps facilitated by common water levels and close proximity of process tank compartments. The feasibility of the Aeromod SEQUOX® system is summarized in Table 5.

Table 5 – Aeromod SEQUOX® Feasibility Evaluation Summary

Advantages	Disadvantages
• Similar to oxidation ditch relative to advantages attributed to process reliability of extended aeration plants • Selector to encourage proper biological flocculation • Process control is achieved by sequencing the air addition with simple timer logic. Process control can be automated by manufacturer's control system • Combines the secondary process with some flow equalization, solids digestion, and clarification into common-wall structure • Nitrogen removal is incorporated into the design and it is possible to incorporate phosphorus removal • Given configuration of process tank compartments, air lift transfer pumps eliminate the need for mechanical return sludge pumping. • Modular design is readily expandable, if site is properly planned.	• Although common wall construction reduces the footprint and concrete requirements relative to oxidation ditches, this process is still capital intensive with major concrete tankage required. • Manufacturer dictates nutrient removal process capabilities • Compact, rectangular clarifiers are susceptible to solid-liquid separation difficulties

BIOLAC® The Biolac® system is a patented extended aeration activated sludge process that uses a fully-mixed treatment tank concept similar to an oxidation ditch, but utilizing a more adaptable pond system configuration (Figure 9). Typical process flow incorporates conventional headworks (screenings and grit removal) from which the raw wastewater flows into the Biolac® system. The Biolac® system consists of a large pond with an efficient aeration/mixing system consisting of aeration blowers and submerged flexible-hose diffusers called aeration chains. Varying levels of control functionality are available from Parkson and a simple control upgrade to the system can provide alternating oxic and anoxic zones for biological nutrient removal. Mixed liquor is eventually discharged at the end of the pond into an integral clarifier that incorporates a sludge removal system on the bottom and a scum removal system at the

DRAFT

surface. Return activated sludge is withdrawn from the bottom of the clarifier with airlift pumps and is returned to the beginning of the pond with the raw wastewater.

Large ponds are used in the treatment process, which allows for operation at long solids retention times (SRT) of 30 – 70 days, compared with 15 – 25 days for other extended aeration activated sludge processes to ensure complete oxidation of BOD and ammonia. The large amount of biomass in the system permits reliable treatment of widely varying loads with only minor operational impacts. The long SRT creates stable sludge that allows sludge wasting to non-aerated sludge holding ponds or directly to dewatering facilities. The manufacturer reports effluent BOD levels of less than 10 mg/L and complete nitrification (ammonia less than 1 mg/L).

Infrastructure for a typical Biolac pond includes sloped-side earthen basin lined with either a geomembrane liner (i.e. HDPE) or concrete. Secondary clarifiers can be configured either with integral rectangular tanks at the outlet end of the basins (referred to as Biolac-R®) or separate secondary clarifiers (referred to as Biolac-SS®), depending on the plant space constraints. Air is provided to the reactor basin for aeration and mixing via aeration blowers and submerged diffuser chains. Return of waste activated sludge is achieved with air lift transfer pumps alleviating the need for mechanical sludge return pumping. The feasibility of the Biolac® system is summarized in Table 6.

Table 6 – Biolac® Feasibility Evaluation Summary

Advantages	Disadvantages
• Low-loaded (Low F:M) extended aeration activated sludge technology • High oxygen transfer efficiency delivery system • Exceptional mixing from controlled aeration chain movement with little energy input • Simple system construction that could incorporate existing pond structure at the plant. Only minimal concrete structures required for clarifiers. • Floating air lines and diffusers – do not require anchoring so no pond penetrations • Very stable – can handle variable flows and loading easily because of the high SRT and low F/M ratio • Provides biological nutrient removal	• Larger footprint because of high SRT (40 – 60 days) – not an issue for Guadalupe WWTP since pond infrastructure is existing at the site.

As already mentioned in TM 1, Biolac® has been selected as the best-fit long-term solution for reliable and consistent WDR compliance. The smallest pond, Pond 3 will be converted to a Biolac® pond for treatment of the design flows and integral clarifiers constructed on the north bank of the basin. Because only one small pond is necessary for treatment with the Biolac® process, the other three ponds will remain available for other uses such as effluent wet weather storage.

DRAFT

4 DESIGN PACKAGES

4.1 Headworks

4.1.1 Mechanical

The headworks mechanical layout is shown in Drawings M-1 and M-2. Please refer to details of existing facility and alternative analysis in Sections 4.1.1 and 6.1 in TM1.

4.1.1.1 Bar Screens

The existing comminutor will be replaced with a mechanically cleaned bar screen, while retaining the manual bar rack as a stand-by option. The rake mechanism will transport the screenings out of the headworks pit on to the ground level into a washer/compactor. Design data for the screen is presented in Table 7.

Table 7 - Mechanically Cleaned Bar Screen

Parameter	Units	Value
Number of Screens	no	1
Type	-	Multiple Rake
Bar Spacing	mm	6
Channel Width	ft	2.5
Channel Depth	ft	2.8
Inclination from horizontal	deg	75 (minimum)
Discharge height	ft	24
Motor Size	HP	5 (maximum)
Material	-	304 Stainless Steel
Vendors	-	Huber, Vulcan, Duperon, Headworks

4.1.1.2 Washer/Compactor

The screenings will discharge into a washer/compactor which will be mounted on top of the wall between the wet well and headworks pit. Filtrate from the washer/compacter will be discharged to the influent pump station wet well. Screenings will be washed, dewatered, and then collected in waste bins for disposal.

Design data for the washer/compacter is presented in Table 8.

DRAFT

Table 8 - Screenings Washer/Compacter

Parameter	Units	Value
Number of washer/compacters	no	1
Screenings capture rate at design ADF (Q = 0.96 mgd)[6]	CF/d	12.5
Screenings capacity of washer compactor	CF/hr	70
Minimum percent dry solids of compacted screenings	%	45
Number of storage containers	no	2 (1 in use, 1 standby)
Motor Size	HP	4 (maximum)
Material	-	304 Stainless Steel
Vendors	-	Huber, Vulcan, Duperon, Headworks

4.1.1.3 Influent Pump Station

The existing pumps, vertical discharge piping segments, base discharge elbows and guide rail system, and two (2) check valves will be replaced. The existing ductile iron force main and manifold piping will remain in place. The replacement pumps will have the characteristics shown in Table 9.

Table 9 - Influent Pumps

Parameter	Units	Value
Type	-	Submersible Solids Handling Non-Clog
Number of pumps	no	3 (Lead, Lag, Standby)
Suction inlet diameter	in	6
Discharge flange diameter	in	6
Nominal motor speed	rpm	1200
Impeller diameter	in	11.625
Motor size	HP	20 (maximum)
Material	-	Cast Iron Impeller and Volute
Vendors	-	Flygt, Yeomans, Cornell

4.1.2 Civil and Structural

The asphalt driveways which access the headworks are in satisfactory condition and size and do not require repair or widening. One hose station is located in the southeast corner of the headworks pit, which is adequate for servicing the screen, washer/compactor and pump station. A water line will be extended to the washer/compacter for washing the screenings.

The bar screen will be anchored to the top of channel and top of the wall between the headworks pit and wet well. The washer/compacter will be installed on a metal bracket mounted on top of the same wall. A metal platform will be constructed to access the bar screen motor and chain tension adjustment assembly. This platform will require new handrails as well as modifications to the existing handrails around the headworks. Minor concrete channel modifications will be needed to install the bar screen.

[6] Values for 0.25 inch bar spacing extrapolated from figure 9-4 of Metcalf & Eddy, 3rd ed, pg 453

DRAFT

Foot-mounted base discharge elbows will be anchored to the wet well floor to securely hold the pumps in place. The guide rail system will be clamped to the eight-inch discharge piping. The existing grating above each wet well will be modified with a hinge to allow easy removal of the pumps.

4.1.3 Electrical and Control

Electrical upgrades will include replacing light fixtures, installing new control panels for the bar screen and washer/compacter, and providing power to the new equipment. One Variable Frequency Drive (VFD) will be installed to match the two existing VFDs installed in 2008. New level sensing devices will be installed. The existing MCC NEMA 3R enclosure for the VFDs will be replaced with a new air-conditioned and gasketed enclosure, which will match the existing footprint.

4.1.3.1 Bar Screen and Washer Compacter

The bar screen and washer/compacter will be controlled by a common Programmable Logic Controller (PLC) and a local control station. The PLC and local control station will be installed next to the bar screen and will allow the bar screen to be changed between manual and automatic controls.

When the local control station is in the AUTO position, the bar screen shall be controlled by upstream and downstream ultrasonic water level sensors. Screen operation shall be started when the water level sensors monitor a certain water level difference, when the float switch senses high water level, or when a certain time has passed since the last operation of the screen. Screen operation is stopped with an adjustable delay time after the water difference is below a certain value and after the float switch ceases to indicate high water alarm, or after a certain run time has expired (if operation was started by timer). When the local control station is in the HAND position the operator shall be able to run the rake assembly or the screenings washer by pushing the respective FORWARD or REVERSE tip button.

A proximity switch will be furnished on the screen to detect a stand-still of the motor shaft while the motor is running forward. In this situation, the motor direction is automatically reversed for a PLC adjustable period of time. Then the motor direction and rake movement is reversed again to forward movement. If the shaft stalls again during the forward movement, return is repeated one more time. If the shaft stalls a third time, the screen shut-off alarm is rendered. Resetting the bar screen is manually performed after correction of any cause for the alarm.

The washer/compacter shall be cycled on and off by remote control signals from the PLC. The washing press shall be cycled by a screen cycle counter generated from the bar screen. The washer/compacter can be run automatically or manually in forward and reverse.

4.1.3.2 Influent Pumps

Each pump will be controlled automatically by the existing controller. The existing control system will need to be slightly modified to incorporate the new water level sensors and

DRAFT

adjusted water surface elevations. During normal operation, the wet well level will operate in the variable speed zone and the pump speeds will be adjusted using variable frequency drives (VFD) based on the measured water levels. The variable speed zone is between HHWL and LWL. The controller operation will be based on the functions shown in Table 10.

Table 10 - Wet Well Water Level Controls

Water Level	Sensor Type	Function
HHHWL	Emergency Float Switch	High water level alarm, all pumps full speed
HHWL	Pressure Transducer	Both pumps on at full speed
HWL	Pressure Transducer	Lead pump on at full speed
LWL	Pressure Transducer	Lead pump at constant minimum speed, Lag pump off
LLWL	Pressure Transducer	Lead pump off
LLLWL	Emergency Float Switch	Low water alarm, all pumps off

4.1.3.3 Flow Measurement

Flow measurement will be accomplished by the City-installed Endress + Hauser Proline Promag 10W electromagnetic flow meter. The instantaneous flow rate is displayed on the digital screen at the flow meter. It is recommended that a totalizer, chart recorder, or data logging system be installed prior to construction to obtain the diurnal curves for the influent flow rate.

4.1.4 Hydraulics

4.1.4.1 Wet Well

To ensure that the bar screen channel maintains the desired velocities, the wet well water level will be designed to operate just below the bar screen channel invert elevation. The minimum wet well level will be set above the invert elevation of the normally-open slide gate connecting the two wet wells to allow use of both wet well volumes simultaneously. The minimum wet well water level will also provide enough submergence above the pump inlet elevation to prevent surface vortex. The wet well water level data is presented in Table 11 and water level elevations are shown in Drawing M-2.

Table 11 - Wet Well Water and Structure Elevations

Parameter	Units	Value
HHWL	ft	52.12
Depth of variable speed operating volume	ft	1.00
LWL	ft	51.12
Required wet well operating volume for low flow periods (pumps at minimum speed)[7]	gal	125
Required wet well operating depth for low flow periods (pumps at minimum speed)	ft	0.21
Pumps off elevation (minimum wet well water level)	ft	50.64
Slide gate invert elevation	ft	50.58
Minimum submergence above base discharge elbow	in	22
Wet well invert elevation	ft	48.50

[7] Based on a minimum flow rate of 250 gpm and two pumps switching off between starts with maximum 15 starts per hour for each pump.

DRAFT

4.1.4.2 Bar Screen Channel

The headworks shall be designed so that the screen approach velocities will minimize grit deposition during low flows and reduce dislodging of screenings during high flows. The water levels and head loss through the screen at various flow rates is presented in Table 12.

Table 12 - Bar Screen Channel Depths

Parameter	Units	Value		
Flow Regime	-	Current	Design (WDR Limit)	Design Peak Hour
Flow Rate	mgd	0.6	0.96	2.88
Downstream water depth[8]	ft	0.22	0.29	0.56
Downstream velocity	fps	1.69	2.05	3.18
Velocity through openings[9]	fps	2.93	3.45	5.03
Upstream water depth	ft	0.43	0.58	1.19
Upstream velocity	fps	0.87	1.02	1.49
Head loss[10]	ft	0.17	0.24	0.51
Change in depth	ft	0.21	0.29	0.63
Upstream Channel Freeboard	ft	2.27	2.21	1.51

4.1.4.3 Pump Station Force Main

A summary of the force main data is presented in Table 13. The operating points for the force main are shown in Table 14.

Table 13 - Force Main Data

Parameter	Units	Value
Discharge Elevation (at grit chamber inlet)	ft	76.57
Minimum Static Head	ft	24.55
Maximum Static Head	ft	26.10
Discharge piping diameter	in	8
Force main piping diameter	in	12
Minimum Hazen-Williams coefficient	-	120

Table 14 - Influent Pump Station Operating Points

Parameter	Units	Values				
Flow regime	-	Low	Current ADF	Current PHF	Design ADF*	Design PHF
Influent Flow Rate	mgd	0.3	0.6	1.92	0.96	2.88
Number of Pumps	no	3 Installed Units - Lead, Lag, Standby [+, ++]				
Operating Flow Rate	gpm	250	416	1333	667	2000
Operating TDH	ft	26.34	26.70	32.23	27.58	31.60

* WDR Limit
\+ One unit required for flowrates up to 1,340 gpm (Approximate TDH = 32.5-ft)
++ Two units required for flowrates up to 2,460 gpm (Approximate TDH = 35-ft)

[8] Water depth calculated at seven (7) feet upstream of wet well and is based on draw down curve calculations.
[9] Through velocities based on Vulcan VMR bar screen dimensions.
[10] Calculated using a 1.43 k factor, *Manual of Practice*, ACSE WEF, No. 8, Vol 1, pg 407, eq. 1.

DRAFT

4.2 Grit Removal System Upgrade

4.2.1 Mechanical

Drawing M-3 and M-4 illustrates the layout of the grit removal system components. A new rotating propeller drive motor and shaft will extend down to the bottom sump with grit fluidizer vanes, which keep the grit fluidized. A new top mounted Turbo Pista® Grit Pump will be installed with a suction line, which extends down inside the drive tube to the storage hopper bottom. Having a vertical suction line will reduce the probability of plugging in the suction pipe. A new grit screw conveyor and classifier will also be installed at the west end of grit chamber and close to the grit pump, thus enabling the shortest and straightest possible grit discharge piping alignment.

4.2.1.1 Rotating Propeller System

A new rotating propeller system and drive motor with a full-length shaft and grit fluidizer vanes will be installed in the existing grit chamber structure. Propeller system data is presented in Table 15.

Table 15 - Grit Chamber Rotating Propeller System

Parameter	Units	Value
Number of grit chambers	no	1
Existing grit well diameter	ft	3
Existing grit well depth	ft	5.9
Existing vortex chamber diameter	ft	8
Existing vortex chamber depth	ft	4.4
Design capacity of grit chamber	gpm	3007
Propeller system rotational speed	rpm	21
Motor size	HP	3/4
Material	-	304 Stainless Steel
Vendors		Smith & Loveless

4.2.1.2 Grit Pump and Piping

A new top mounted grit pump and new grit piping will be installed to remove settled grit. The pump will be installed with a vacuum priming system. Grit pump and piping data is shown Table 16.

DRAFT

Table 16 - Grit Pump and Piping

Parameter	Units	Value
Grit Pump		
Type of Pump	-	Centrifugal Recessed Impeller
Number of Grit Pumps	no	1
Nominal Motor Speed	rpm	1200
Impeller Diameter	in	9.5
Motor Size	HP	10
Material	-	Ni-Hard Impeller and Volute
Vendors	-	Smith & Loveless
Grit Piping		
Diameter	in	4
Material	-	Ductile Iron

4.2.1.3 Grit Classifier

A new grit classifier system will be installed northwest of the grit chamber. Drainage piping will be connected to the sewer lines approximately eight feet north of the grit chamber. A concentrator will be installed above the classifier, which aids in dewatering and washing the grit by returning over 90% of the water and organics back to the headworks. Grit classifier design data is presented in Table 17.

Table 17 - Grit Concentrator, Classifier, and Drainage Piping

Parameter	Units	Value
Grit Concentrator		
Number of concentrators	no	1
Concentrator Capacity	gpm	250
Grit Classifier		
Number of classifiers	no	1
Grit capacity	gpm	50
Slope of screw conveyor	deg	22
Rotational speed of screw conveyor	rpm	9
Screw Diameter	in	9
Motor Size	HP	1
Material	-	Type 304 SS
Vendors	-	Smith & Loveless
Number of storage containers	no	2
Volume of each container	CF	36
Drainage Piping		
Diameter	in	6
Material	-	Ductile Iron

4.2.2 Civil and Structural

The asphalt driveway which accesses the grit chamber area is in sufficient condition and size and does not require repair or widening. One hose station is located near the inlet piping which is

DRAFT

adequate for servicing the grit removal systems. The existing grit pump and piping will need to be removed to allow installation of the new grit classifier.

A concrete pad will be constructed for mounting the grit classifier. A concrete pedestal will be constructed to mount a base bend for the drainage piping.

4.2.3 Electrical and Control

Electrical lines will be rerouted to provide service to the relocated grit removal system components. The existing light fixtures are sufficient for nighttime operations and do not require improvements.

The rotating propeller system, grit pump, grit classifier, and vacuum priming system will be controlled by a common control panel installed in an enclosure mounted next to the grit pump. The rotating propeller drive runs continuously but can be controlled by an On-Off selector switch.

To control the operation of the grit pump, a manual Momentary-Off-Automatic selector switch shall be provided. In the automatic position, control shall be by a time clock with manual selector switch to override the timer and initiate the pumping cycle. A 24-hour, 96-position time clock will be provided. The 24-hour timer contacts shall operate a 0-30-Minute Pump Timer (and a 0-30-Minute priming timer). All timers will be provided within the control cabinet enclosure. The grit classifier and pump turn on simultaneously and the classifier will continue running for 10 minutes after the pump stops.

The vacuum priming system is comprised of a pneumatically controlled discharge pinch valve installed on the grit pump discharge piping, air compressor, vacuum pump, vacuum control solenoid valve, resonant frequency prime level sensor, heater, and a float-operated check valve. The operation of the vacuum priming system shall be tied into the pump cycle timer, so as to be fully automatic.

4.2.4 Hydraulics

As the wastewater flows through the vortex chamber a maximum head loss of ¼" will occur at peak flow conditions according to the Smith & Loveless. Flow leaves the grit structure by freefalling into a vertical pipe set flush with the bottom of a rectangular concrete channel.

The hydraulic conditions shown in Table 18 will occur in the grit pump system.

Table 18 - Grit Piping Hydraulics

Parameter	Units	Value
Design flow rate of pump	gpm	250
Design Total Dynamic Head (TDH)	ft	22.89
Suction lift	ft	10.53
Pipe velocity	fps	6.4

DRAFT

4.3 AIPS pond conversion to Biolac® system

4.3.1 Process Design

As discussed in TM 1 and Section 3 of this report, Pond 3 will be converted to a Biolac® pond. Wastewater will be delivered from the grit removal system directly to the Biolac® pond where mixing and aeration of the wastewater will be achieved by blowers and flexible diffusers assemblies. Two integral concrete clarifiers will be constructed at one end of the pond to provide solids clarification. Mixed liquor (ML) from the aeration pond will flow through orifices along the bottom of the concrete partition wall and into the two clarifiers. Solids will flocculate and settle to the bottom of the clarifier while the clarified secondary effluent flows over the V-notch weirs for effluent storage and disposal. The activated sludge settled at the bottom of the clarifier will be airlifted to a trough, from where the sludge can be returned to the aeration basin or wasted.

The complete Biolac® Treatment System sizing shown in Table 19 will provide the biological treatment conditions shown in Table 20. The Biolac® system will be designed to meet possible future secondary effluent requirements of 30 mg/L BOD and TSS and in consideration of future tertiary treatment upgrades for Title 22 Recycled Water. Please also refer to Section 6.3.2 in TM 1.

Table 19 – Biolac® Sizing[11]

Parameter	Units	Value
Aeration Basin		
Width at grade	ft	162
Length at grade	ft	164
Side Water depth	ft	11
Slope ratio	ft	2:1
Width at bottom	ft	106
Length at bottom	ft	136
Basin volume	MG	1.57
Hydraulic retention time	Day	1.57
Freeboard	ft	3
Clarifiers		
Number of Clarifiers	no	2
Width at grade	ft	24.32
Length at grade	ft	55
Side water depth	ft	17
Side slope angle	deg	50
Rise rate per clarifier	gpd/ft^2	399
Weir loading rate per clarifier	gpd/ft	5,000
Freeboard	ft	3
Sludge hopper depth	ft	6
Aeration		
Total air flow rate	scfm	2658

[11] Sizing by Parkson

DRAFT

Table 20 - Biological Treatment Conditions[12]

Parameter	Units	Value
Aeration Basin Conditions		
MLSS in aeration basin	mg/L	3189
Food to Microorganism (F/M) ratio	d^{-1}	0.06
Sludge Retention Time (SRT)	days	69
Activated Sludge		
Activated sludge concentration	mg/L	6,378
Return Activated Sludge (RAS) flow rate	mgd	1.2
Wasting rate	lb/d	1,681
Effluent Quality		
BOD_5 (maximum)	mg/L	12
TSS (maximum)	mg/L	15

4.3.2 Mechanical

4.3.2.1 Influent and Effluent Biolac® Piping

The Biolac® influent piping will be 16" ductile iron pipe and will connect to the pipe following the existing splitter box as shown in Drawing C-4.

The Biolac® effluent piping will be connected to the existing effluent manholes on the west side of the plant. Bypass piping will be constructed to allow secondary effluent to flow to pond 4 for additional effluent storage. The existing AIPS piping and weirs will require minor modifications to allow stored effluent to flow from pond 4 to ponds 1 and 2.

4.3.2.2 Aeration Equipment

Aeration and mixing is accomplished through the use of Parkson BioFuser® fine bubble diffuser assembly and the Parkson BioFlex® floating air delivery pipes. Air flow to each floating air delivery pipe will be supplied by the positive displacement aeration blowers. Each floating air delivery pipe can be shut off by butterfly valves located above grade. An aeration equipment summary is given in Table 21.

[12] Provided by Parkson

Table 21 - Aeration Equipment

Parameter	Units	Value
Diffuser Equipment		
Number of BioFuser® fine bubble diffuser assemblies	no	117
Air flow rate to each fine bubble diffuser assembly	scfm	21
Material of BioFuser® fine bubble diffuser assemblies	-	soft urethane
Floating air delivery pipes		
Number of Parkson BioFlex® floating air delivery pipes	no	9
Air flow rate to each floating air delivery pipe	scfm	273
Material of Parkson BioFlex® floating air delivery pipes		Polyethylene
Air Header Piping		
Pipe diameter	in	12
Material	-	Ductile Iron
Blowers		
Number of blowers	no	3 (2 Duty, 1 Standby)
Design capacity of each blower	scfm	1,600
Design total dynamic head of each blower	psig	5.82
Nominal motor speed	rpm	1800
Motor Size	HP	60
Material	-	Cast Iron
Vendors	-	Aerzen, Dresser Roots,

4.3.2.3 Activated Sludge Piping

The Biolac® clarifier utilizes a floating flocculating rake mechanism improves the distribution of the settled solids by traveling back and forth above the sludge hopper. The settled solids (activated sludge) are collected by a stationary perforated suction manifold pipe laid along the hopper bottom. Utilizing air from the blowers, sludge is pumped to a sludge trough using an air lift pump system. The RAS pipeline is directly connected to the sludge trough and is routed to the aeration basin inlet zone. A bypass connection will be installed in the RAS pipeline to allow the wastewater in the clarifier and basin to be drained and returned to the headworks. WAS piping is connected between the sludge trough and WAS pump station. Activated sludge piping data is presented in Table 22.

Table 22 - Activated Sludge Piping

Parameter	Units	Value
Air lift pump pipe diameter	in	10
Air lift pump pipe material	-	Polyvinyl Chloride Schedule 40
RAS pipe diameter	in	16
RAS pipe material	-	PVC
WAS pipe diameter	in	4
WAS pipe material		PVC

4.3.3 Civil and Structural

To construct a Biolac® treatment system within the existing AIPS pond 3, the following earthwork will need to be accomplished:

DRAFT

- Remove digester pit internal earthen berm,
- Reshape existing 3:1 side slopes to be 2:1,
- Excavation for construction of clarifier.

The Biolac® pond will produce excess fill which can be stockpiled onsite. A summary of the earthwork volumes for converting AIPS Pond 3 into a Biolac® system is shown in Table 23.

Table 23 - Pond 3 Earthwork Summary

Parameter	Units	Value
Internal earthen berm	CY	1,400 (cut)
Reshaping side slopes	CY	1,200 (fill)
Clarifier excavation	CY	150 (cut)
Total earthwork required	CY	350 (waste)

The existing geomembrane liner will be removed and a new 60 mil HDPE liner will be installed after the earthwork, pipe installation, and clarifier construction is completed.

The aeration blowers will be housed in a prefabricated building mounted on a new concrete slab. The clarifiers, partition wall, and sludge trough will be constructed of concrete. Metal platforms and handrails will be installed at the clarifier. The floating air delivery pipes will be secured to the top of the aeration basin with anchor posts.

4.3.4 Electrical and Control

Electrical work will consist of providing power for the blower building, rake mechanisms, DO sensor, and control panel. A single light fixture south of proposed clarifier location is sufficient for night time operations.

The control panel for the Biolac® system will be the supplier's standard panel. Several options are available for Biolac® control including adjustable speed blowers and the proprietary "Wave Oxidation" process for dissolved oxygen control and biological nutrient removal. The effluent goals for the Guadalupe WWTP do not necessitate advanced control strategies and the basic control panel is proposed for this project, as described in the following discussion. Preliminary calculations conclude that a single blower unit will satisfy mixing requirements and the second duty blower will only be required during periods of peak loading. To minimize electrical system demands, a timer system will be employed to allow staging blowers on/off to match diurnal oxygen demands.

The manufacturer-supplied control panel will be furnished with all blower control and monitoring equipment including full-voltage soft-starters, motor overload and temperature protection measures, and system control utilizing either relay-ladder logic or a programmable logic controller. The control panel will be factory-tested and shipped to the site for integration by the Contractor's electrician.

To control the aeration blowers, HAND-OFF-AUTO selector switches are provided on the control panel. The HAND position is to provide for manual operation of the blowers in the

DRAFT

event of processor and or panel view failure. When in the AUTO position, the blowers can be operated on a Timer function to control aeration timing by controlling blowers according to an operator-adjustable schedule. In the OFF position, the blowers are shut down.

A dissolved oxygen (DO) probe will be provided to provide monitoring of the reactor basin for operational control. The DO probe will not provide automatic control.

The flocculating rakes are controlled by the manufacturer-supplied control panel. Through a selector switch, the rakes can be run on a timer or manually. Limit switches are used to change the motor direction or enable alarms.

The sludge airlift utilizes compressed air from the aeration blowers. The airlift will run continuously, but can be controlled by a manual valve at the clarifier. The RAS will run continuously as long as the airlift is operating.

4.3.5 Hydraulics

Head loss through the aeration basin, clarifier and the partition wall orifices is negligible. The water in the aeration basin and clarifier is set by the double sided vee-notch weir in each clarifier. The preliminary sizing for the weir and launder is presented in Table 24.

Table 24 - Effluent Weir and Trough Data[13]

Parameter	Units	Value
Trough		
Trough width	in	18
Trough depth	in	12
Water depth at peak flow	in	10.15
Weir		
V-notch weir angle	deg	90
V-notch spacing	in	6
Total weir length per clarifier	ft	74
Number of v-notches per clarifier	no	146
Flow to each weir at peak flow	gpm	6.85
Nappe height at peak flow	in	1.55

The activated sludge flows under gravity head and is returned to the influent zone of the aeration basin.

4.4 Sludge Handling Facilities

As stated in Technical Memorandum No. 1 (TM1), using conventional sand drying beds would require 48,000 square feet (SF) of drying area and would cost in excess of $1,400,000. Three potential alternatives discussed in TM1 were mechanical dewatering equipment, vacuum assisted sludge drying beds (VASDB), and Quick Dry filter® beds. A comparison of these alternatives is presented in Table 25.

[13] Sizing by Parkson

DRAFT

Table 25 - Sludge Dewatering Alternatives

Parameter	Value		
Type	Screw press	Quick-Dry Filter Bed	VASDB
Capital cost	$391,000	$767,000	$661,000
Typical labor requirement[14]	Low	Medium	Medium-Low
Polymer injection system required	yes	Yes	yes
Required area footprint	500 SF	10000 SF	2000 SF
Companies	Huber, FKC, PWT	F.D. Deskins Co. Inc.	US Environmental

The combination of lower capital cost, smaller footprint, and fewer required hours of labor, and at least three competitive vendors, substantiate the screw press as the preferred alternative.

4.4.1 Mechanical

Layouts of the WAS pump station and Screw Press are shown on Drawings M-9 and M-11 respectively.

4.4.1.1 WAS Pump Station

Progressive cavity pumps will pump the WAS to the screw press facility at the required inlet pressure. Connections for a future screw press will be incorporated into the piping. Bypass connections points will be installed along the WAS force main to direct the WAS to Pond 1 or the existing drying beds in the event the screw press is in operable. At the bypass connections, quick connect adapters will be installed to facilitate hose connection. Once the screw press is operable, the stored sludge could be processed by the screw press during off cycle times. Temporary pumps could be used to pump the stored sludge to the screw press using the same bypass connections. The WAS pumps and piping will have the characteristics shown in Table 26.

Table 26 - Sludge Feed Pumps and Piping

Parameter	Units	Value
Pumps		
Pump type	-	Progressive Cavity
Number of pumps	no	2 (1 Duty,1 Standby)
Nominal Speed	rpm	1,800
Motor Size	HP	3
Material	-	Buna N rubber stator, tungsten carbide rotor
Vendors	-	Seepex, Netzsch, Moyno
Piping		
Diameter	in	4
Material	-	Ductile Iron

[14] Values are based on information obtained from telephone conversations with operators

DRAFT

4.4.1.2 Sludge Dewatering Screw Press

Adjustments to the wasting rates of the Biolac® clarifier are handled by the screw press by adjusting the daily run times. The screw press will be installed with an air compressor and a polymer injection system. Design data for the screw press facility is presented in Table 27.

Table 27 - Screw Press

Parameter	Units	Value
Percent dry solids of feed sludge	%	0.64
Run time at design capacity	hrs/day	17
Solids loading capacity	lb/hr	100
Sludge feed flow rate	gpm	30.3
Solids capture rate	%	95
Percent dry solids of effluent	%	22
Polymer usage	lb/d	25
Maximum screw speed	rpm	1.9
Screw diameter	in	17.3
Nominal motor speed	rpm	1,800
Motor size	HP	2
Material	-	Type 316SS
Vendors	-	Huber, PWT, FKC

4.4.2 Hydraulics

Hydraulic design data for the WAS force main is shown in Table 28.

Table 28 - WAS Force Main

Parameter	Units	Value
Water surface elevation in Biolac® sludge trough	ft	70.60
Pump center line elevation	ft	68.00
Screw press inlet center line elevation	ft	68.50
Design flow rate of each pump	gpm	30
Design total dynamic head	ft	68.5
Design pipe velocity	fps	0.78

4.4.3 Civil and Structural

The screw press facility will require the following civil work:

- Concrete loading driveway to remove dried sludge cake,
- Extension of existing water lines,
- Filtrate piping connected to existing sewer line.

The WAS pump station will be built on the same concrete slab as the screw press facility which will include a canopy for protection from and rain.

DRAFT

4.4.4 Electrical and Control

Electrical wiring will be extended to the screw press facility. Lighting fixtures will be installed at the WAS pump station and screw press facility. Additional electrical work will be required to install and connect control panels.

Run times for the sludge handling facilities are dictated by the desired sludge wasting rate of the Biolac® clarifier. Operations for each sludge handling facility component (screw press, WAS pumps, polymer injection system) can be controlled manually or automatically by a common PLC. Startup and run times for all sludge handling facilities are determined by a preset timer on the PLC. Immediately following the startup of the screw press motor, the WAS pump station and polymer injection system are started. The screw press speed and polymer feed rates are adjusted automatically based on signals from a flow meter installed on the discharge end of the WAS pumps. Pressure inside the press is controlled by a pressure cone, pneumatic actuator, integrated controller, and a pressure sensor at the screw press inlet. When the maximum throughput capacity of the screw press is reached, the pressure sensor will measures the maximum limit pressure level and the sludge feed will shut off. The feed is allowed to start again when the pressure sensor no longer measures the limit pressure level and a selectable delay time has expired. The washing sequence is initiated and terminated based on preset timers. During the washing sequence, the WAS pumps and polymer injection system is stopped and the screw press motor direction is reversed.

4.5 Site Services

4.5.1 Civil

It is anticipated that 20% of the existing asphalt driveways will require repair at the end of construction. Table 29 shows the anticipated required area of asphalt rehabilitation.

Table 29 – Asphalt Rehabilitation

Parameter	Units	Value
Current asphalt driveway area	SF	42,000
Required area asphalt rehabilitation	SF	8.400

4.5.2 Plant Electrical

The treatment plant has two electrical services from PG&E.

The main service (Service No. 1) is 600 amps, 480 volt, 3-phase with a 125 kw generator. The plant is split into critical (with generator backup) and non-critical motor control centers. The critical loads consisted of the headworks, half of the aeration lagoons, half of the influent pumps, administration offices, and site lighting.

In 2004, the lagoons were redesigned into new aeration ponds and the aerators were removed from the existing service. A second 400 amp, 480 volt, 3-phase service (Service No. 2) was added northwest of AIPS Pond 3. The new pond aerator load was transferred to Service

DRAFT

No. 2. This service has a critical and non-critical switchboard. A 60 kw generator backs up the critical load.

The aeration load transfer removed approximately 120 hp of connected load from the 600 amp service. This allows excess capacity to absorb any increase in load at the headworks area.

The new biological aeration system, WAS pumps, clarifiers, and sludge handling facilities will be powered from Service No. 2. A new 400 amp service meter switchboard, with automatic transfer switch and distribution switchboard, will be added adjacent to the existing second service which is north of the proposed aeration basin. The new switchboard will re-feed the existing second service switchboard to keep the aerators active during construction. The new switchboard will also serve the new loads mentioned herein. The new service will have a new standby generator sized at approximately 150kw to 200kw. The generator size will be confirmed during the design phase based on desired spare capacity for load growth.

The existing 60kw generator likely meets current APCD Tier emissions and can be salvaged and sold prior to 2012 when the standards are next expected to change. The existing service will be abandoned in place after startup of the new facility. The aeration controls may be abandoned in place. The switchboard is fairly new and should remain as an asset since it has a conduit system and duct banks to the pond areas.

The new 400 amp service will have approximately 300 amps of connected load during construction and approximately 200 amps of load after construction (abandon pond aerators).

4.5.3 Plant Controls

The electrical room has a status control panel with a mimic site plan. The mimic has indicator lights showing when a process is operating. An indicator may be added to show new WAS and sludge handling processes. The Biolac® process can utilize Pond 3 indication on the status panel. This level of display will be determined during the design stage. Alarms are reported via an autodailer.

The plant does not have a SCADA system. A SCADA system with alarm telemetry is not included in the Phase 1 scope but is recommended for future upgrades.

4.5.4 Site Security

The existing WWTP is surrounded by fencing. No additional security improvements are identified for Phase 1 of the project.

4.5.5 Roadways

The existing access road on the west side of the plant is a dirt road in poor condition. Assuming adequate project funds are available, a gravel road will be constructed above the existing road from Main Street to the plant entrance. This work effort may be included in the Phase 1 construction documents as an optional bid item to maintain project budget objectives.

DRAFT

4.5.6 Stormwater Drainage

No changes or additions will be made to the existing drainage system of the plant.

5 MAINTENANCE OF PLANT OPERATION DURING CONSTRUCTION

5.1 Headworks

During installation of the mechanical bar screen, flow will be directed to the manually cleaned bar rack using the existing stop plates. For installation of the new pumping system components, work will be accomplished one wet well at a time by closing the slide gates.

5.2 Grit Removal System

The grit chamber will continue to be bypassed until improvements to the grit removal system are complete.

5.3 Biolac® Treatment System

As mentioned in Section 3.2 Intermediate Solutions, taking Pond 3 off line may improve performance of the existing process. Doing so will facilitate the Biolac® conversion to take place with out disrupting on-going plant operations. Bypassing Pond 3 can be done by placing the existing stop gates in the north and west walls of the existing transfer manhole and place stop gates in both walls of the manhole between Ponds 1 and 3. The existing electrical load center and controls for Pond 3 surface aerator will need to be demolished to facilitate construction of the new clarifier structure.

DRAFT

APPENDICES

Appendix A – Bar Screen Data Sheet
Appendix B – Influent Pump Data Sheets
Appendix C – Grit Removal System Data Sheets and Drawings
Appendix D – Biological Treatment System Data Sheet and Calculations
Appendix E – Aeration Blower Data Sheets
Appendix F – Pre-Engineering Building
Appendix G – Progressive Cavity Pump Data Sheet and Drawings
Appendix H – Sludge Dewatering Screw Press Data Sheets
Appendix I – Engineer's Opinion of Probable Construction Cost (30%)

DRAFT

Appendix A
Bar Screen Data Sheet

DRAFT

EQUIPMENT DATA SHEET

PROJECT INFORMATION

Project: Guadalupe WWTP Improvement Project **Job No.:** 6576
Prepared By: Michael Hill **Date:** 9/1/2010
Revised By: _____ **Date:** _____ **Rev. No.:** _____
Revised By: _____ **Date:** _____ **Rev. No.:** _____
Revised By: _____ **Date:** _____ **Rev. No.:** _____

PRELIMINARY DESIGN INFORMATION

Equipment Name: Mechanically Cleaned Multiple Rake Bar Screen
Specification Section: 11410 **Title :** Mechanically Cleaned Multiple Rake Bar Screen
Equipment Location: Headworks
Equip. Type: Screening Equipment **Equip. Service:** Wastewater (Raw Sewage)
Equip. Dimensions: 2.5' wide, 24' discharge height, ¼" openings
Equip. Weight:
Materials of Construction: 304 Stainless Steel

Equip No.	Equipment Capacity	Motor/ Load (HP)	Standby Power	Motor Speed (RPM)	Equip Speed (RPM)	Maintenance	
						Type	Freq.
SCN-101	4 mgd	5	☐ Yes ☒ No				
			☐ Yes ☐ No				
			☐ Yes ☐ No				
			☐ Yes ☐ No				
			☐ Yes ☐ No				

No. of future additional units: _____

COMMENTS: Proposal does not include cost of installation

DESIGN DEVELOPMENT INFORMATION

GENERAL

	Manufacturer A	Manufacturer B	Manufacturer C	Manufacturer D
Specified MFGR	Vulcan	Duperon	Huber	Headworks
Model	VMR	FPFS Flex Rake	RakeMax	Mahr Bar
Est. Cost/unit	$145,000	$118,000	$142,000	$177,614
Expected Lift				
Delivery Time				

(Catalog cut sheets and standard specification of specified manufacturers enclosed)

MECHANICAL

Inlet Pressure: _____ **Outlet Pressure:** _____

Inlet Diameter: _____ **Outlet Diameter:** _____

SUPPORT UTILITIES

Water: ☒ None ☐ Potable ☐ Non-potable ☐ Utility

Capacity: _____gpm, _____ psi

Drainage: ☒ None ☐ Hub Drain ☐ Floor Drain ☐ Floor Sink ☐ Size _____

Air: ☒ Utility ☐ Instrument ☐ None ☐ None ☐ None

Capacity: _____gpm, _____ psi

Lube Oil: ☐ None ☐ Lubricator

Hydraulic: ☐ None ☐ Power Pack

HVAC

Heat Loss: _____BTU/hr **Combustion Air:** _____scfm

EQUIPMENT INSTALLATION REQUIREMENTS

Equipment Mounting ☐ Base Plate ☐ Skid Frame ☒ Support Legs ☐ Backboard

Structural Support ☐ Equip Pad ☐ Equip Base ☐ Isolation Base

☐ Piers ☒ Wall Brackets Height ____ft

Lifting Requirements ☐ None ☐ Lifting Eyes ☐ Monorail ☐ Bridge Crane

Service Platforms ☒ Yes ☐ No

☐ Equip Supported ☐ Yes ☐ No ☐ Partial

ELECTRICAL

Motor Type ☐ Horizontal ☐ Induction ☐ Contstant Speed

☐ Vertical (Chamber) ☐ Synchronous ☐ Two Speed

☒ Totally Enclosed ☐ Wound Rotor ☐ Reversing (classifier)

☐ Submersible ☐ Variable Speed

Motor Duty ☐ Continuous ☒ Intermittent

Environment ☐ Indoor ☒ Outdoor

☐ Damp ☐ Wet ☐ Corrosive ☐ Hazardous

Variable Speed ☐ Adjustable Frequency

☐ DC – SCR

(If Applicable) ☐ Eddy Current

☐ Hydrostatice

☐ Other _____

EQUIPMENT DATA SHEET

PROJECT INFORMATION

Project: Guadalupe WWTP Improvement Project **Job No.:** 6576
Prepared By: Michael Hill **Date:** 9/1/2010
Revised By: _____ **Date:** _____ **Rev. No.:** _____
Revised By: _____ **Date:** _____ **Rev. No.:** _____
Revised By: _____ **Date:** _____ **Rev. No.:** _____

PRELIMINARY DESIGN INFORMATION

Equipment Name: Screenings Washer/Compactor
Specification Section: 11450 **Title :** Screenings Washer/Compactor
Equipment Location: Headworks
Equip. Type: Screening Equipment **Equip. Service:** Screenings
Equip. Dimensions: _____
Equip. Weight: _____
Materials of Construction: 304 Stainless Steel

Equip No.	Equipment Capacity	Motor/ Load (HP)	Standby Power	Motor Speed (RPM)	Equip Speed (RPM)	Maintenance	
						Type	Freq.
SCN-102	70 CF/hr	4	☐ Yes ☒ No				
			☐ Yes ☐ No				
			☐ Yes ☐ No				
			☐ Yes ☐ No				
			☐ Yes ☐ No				

No. of future additional units: _____

COMMENTS: Proposal does not include cost of installation

DESIGN DEVELOPMENT INFORMATION

GENERAL

	Manufacturer A	Manufacturer B	Manufacturer C	Manufacturer D
Specified MFGR	Vulcan	Duperon	Huber	Headworks
Model	VMR	FPFS Flex Rake	RotoMat WAP	SW W220
Est. Cost/unit		$45,000		$62,305
Expected Lift				
Delivery Time				

(Catalog cut sheets and standard specification of specified manufacturers enclosed)

MECHANICAL

Inlet Pressure: _____ **Outlet Pressure:** _____

Inlet Diameter: _____ **Outlet Diameter:** _____

SUPPORT UTILITIES

Water: ☐ None ☒ Potable ☐ Non-potable ☐ Utility

Capacity: 10 gpm, 40 psi

Drainage: ☐ None ☒ Hub Drain ☐ Floor Drain ☐ Floor Sink ☐ Size _____

Air: ☒ Utility ☐ Instrument ☐ None ☐ None ☐ None

Capacity: _____gpm, _____ psi

Lube Oil: ☐ None ☐ Lubricator

Hydraulic: ☐ None ☐ Power Pack

HVAC

Heat Loss: _____BTU/hr **Combustion Air:** _____scfm

EQUIPMENT INSTALLATION REQUIREMENTS

Equipment Mounting ☒ Base Plate ☐ Skid Frame ☐ Support Legs ☐ Backboard

Structural Support ☐ Equip Pad ☐ Equip Base ☐ Isolation Base

☐ Piers ☐ Wall Brackets Height ____ft

Lifting Requirements ☐ None ☐ Lifting Eyes ☐ Monorail ☐ Bridge Crane

Service Platforms ☐ Yes ☒ No

☐ Equip Supported ☐ Yes ☐ No ☐ Partial

ELECTRICAL

Motor Type ☐ Horizontal ☐ Induction ☐ Contstant Speed

☐ Vertical (Chamber) ☐ Synchronous ☐ Two Speed

☒ Totally Enclosed ☐ Wound Rotor ☒ Reversing (classifier)

☐ Submersible ☐ Variable Speed

Motor Duty ☐ Continuous ☒ Intermittent

Environment ☐ Indoor ☒ Outdoor

☐ Damp ☐ Wet ☐ Corrosive ☐ Hazardous

Variable Speed ☐ Adjustable Frequency

☐ DC – SCR

(If Applicable) ☐ Eddy Current

☐ Hydrostatice

☐ Other _____

Date: 3/31/2010

To: Michael Hill - Dudek

Reference: Guadalupe, CA

Subject: RakeMax Budgetary Proposal

Gentlemen:

We are pleased to provide you with the following preliminary budget worksheet for the Guadalupe, CA project. By choosing the Huber Technology Multi-Rake Bar Screen, Rake Max®, screening, and washing (optional) system, you are selecting state-of-the-art technology that provides optimized operational efficiency. With the largest installed base of screening systems worldwide, Huber Technology's experience is unparalleled in the industry.

Due to its simple operation and high removal efficiencies, the Rake Max® screening system has been widely accepted and applied with over hundreds of units in use worldwide. The Rake Max® is a bar screen with a spacing from ¼″ to 6″. Its bars have either a streamlined tear drop profile or rectangular shape. The bar rack is an integral part of the sturdy frame, ensuring perfect meshing of the rake teeth with the bar spaces. Positive and reliable cleaning is thus guaranteed.

A multitude of rake bars are bolted at selectable distances to a pair of drive chains. With short distances between its rakes, the Rake Max® is able to remove extremely high screenings loads.

In spite of its outstanding discharge height of up to 65 ft (20 m) above the channel floor, the Rake Max® requires a small height above the operating floor thereby fitting virtually into any building.

The benefits and advantages of the Rake Max® are:

- Fine to coarse screen with low head loss
- Removal of extremely high screenings loads
- Unimpaired by grit
- Low height above operating level
- Mechanical overload prevention and automatic reversion
- Well proven, maintenance free lower ceramic bearings
- Made of stainless steel, pickled and passivated in acid bath for excellent finishing and corrosion protection

A NEMA 4X panel housing the PLC and control switches is provided with each equipment to monitor and control system performance. Critical performance parameters are continuously monitored to ensure that trouble free operation is being provided at all times.

In addition to the Rake Max® screen an additional washing press can also be provided as an option. With the additional washing and pressing process disposal costs can be reduced further by separating organic particles from the screening. Volume reduction of up to 70% and weight reduction of up to 45% can be achieved. Please contact us for further information if interested.

This worksheet is for your planning and use. Please carefully review our design criteria for peak flow rate, and design conditions to ensure that the criteria used matches actual project parameters. When detailed project design commences, please contact us for a review of all design parameters, including dimensions and equipment requirements. Once you have confirmed your design parameters and budget, we would like to make available to you, at your request, a complete designer's package including a formalized proposal, detailed specification, and general arrangement drawings.

Huber Technology's price for the enclosed design is **$142,000**. This quoted price includes the equipment as described, freight to site, and start-up by qualified personnel. This quote excludes any taxes that may be applicable. The above information is to be used for budget estimates only and is valid for 60 days.

Please do not hesitate to contact us if you have any questions or would like further information. Thank you for your interest in Huber Technology and our products. We look forward to working with you on this project.

With best regards,
Huber Technology, Inc.

T.R. Gregg
Western Regional Sales Manager
Enc.

DESCRIPTION
RakeMax® Multi-Rake Bar Screen Model One (1) x RakeMax 2300/452/6 Including: • 304 Stainless Steel Construction, chain and sprockets are made of stainless steel • Channel depth: 3' (915 mm) • Channel width: 2.5' (762 mm) • Assumed downstream water level: 2' (610 mm) • Screen width: 18" (452 mm) • Bar spacing: 1/4" (6 mm) • Inclination: 75º • Screen Covers in 304 stainless • Support legs in 304 stainless • All stainless steel components pickled and passivated in acid in acid bath for perfect finishing and corrosion protection • Class 1 Division 2 motor, 2-HP, 480 VAC, 3 phase, 60 Hz • Wall mounted or stand-alone NEMA 4X stainless steel control panel suitable for controlling equipment in a Class 1 Division 2 environment • Standard manufacturer's services have been included. Additional manufacturer's services are available on a per diem rate upon request
ROTAMAT WAP Screening Wash Press Including: • One (1) x WAP 2 • 304 Stainless Steel Construction • Class 1 Division 2 motor, 4-HP, 480 VAC, 3 phase, 60 Hz • Support legs • Discharge pipe • Enclosed feed trough • Three (3) washing points with two (2) solenoid valves, Class 1 Division 2, 1-inch, 2-way brass body, 110 VAC, 60 Hz

Notes

1. Equipment specification is available upon request
2. If there are site-specific hydraulic constrains that must be applied, please consult the manufacturer's representative to ensure compatibility with the proposed system
3. Electrical disconnects required per local NEC code are not included in this proposal
4. Huber Technology warrants all components of the system against faulty workmanship and materials for a period of 12 months from date of start-up or 18 months after shipment which ever occurs first
5. Budget estimate is based on Huber Technology's standard Terms & Conditions and is quoted in US$ unless otherwise stated

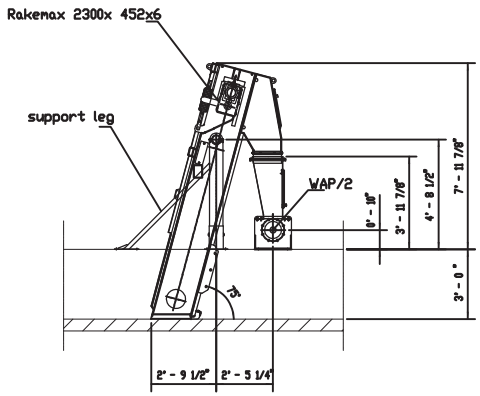

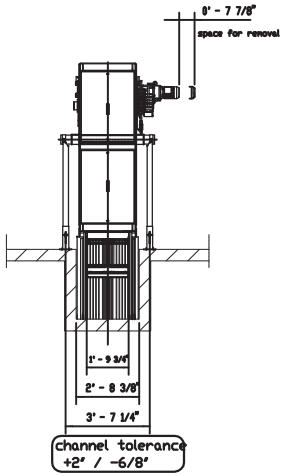

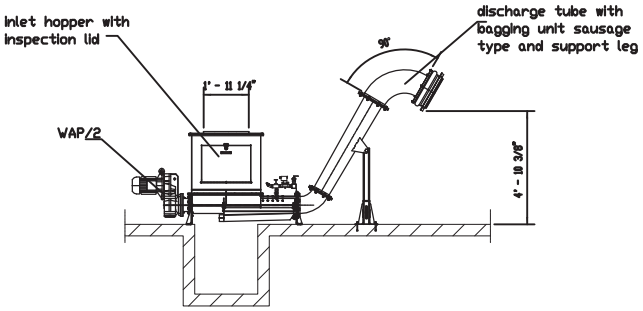

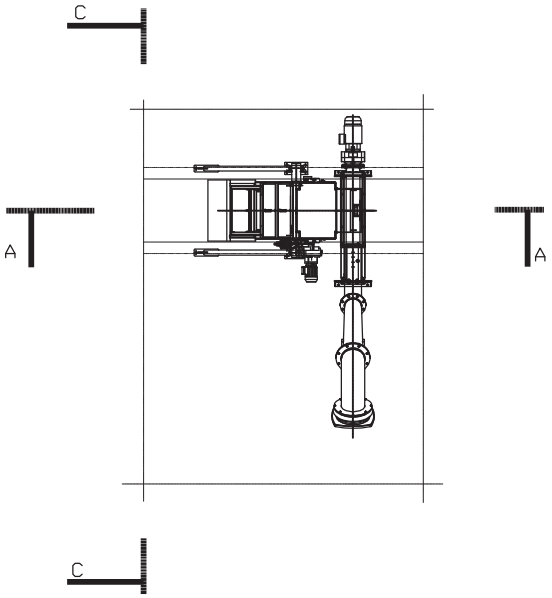

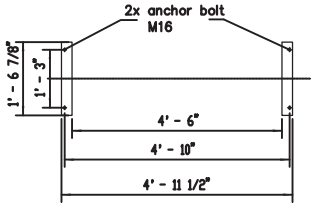

DETAIL: DRILLING POINTS – WAP2

Scale 1/2"=1

detail: support leg Rakemax

1/2"=1'0"

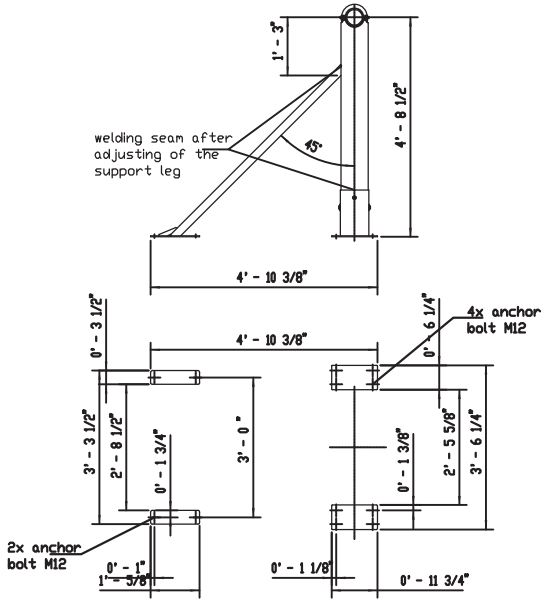

Note:
Channel walls must be absolutely vertical in the area of the screen. In the area of the screen bottom plate the channel surface must be plane with a max. tolerance of +/-1/8".

* Trapezoidal channel in front of RakeMax
* These anchor bolts are only permissible in concrete with a resistance of >=B25<=B55
* If there is not sufficient room height we recommend to provide an opening in the roof

WARNING:
Moving machine parts. Protection against accidental contact to be supplied by client according to country specific regulations.

Fall protection to be supplied by client (type of protection acc. to country specific regulations.) (also valid for planned or existing covers of channel > 3' - 7 1/4" height)

NO AREA GRINDING OF NON-STAINLESS WELDS OR MATERIALS PERMITTED NEAR THE HUBER EQUIPMENT. CONTRACTOR TO INSPECT HUBER EQUIPMENT AND PROPELY REMOVE/CLEAN ANY IRON PARTICULATES OCCURING FROM AREA WELDING AND GRINDING RELATED OR UNRELATED OF THE HUBER INSTALLATION.

DATE	REVISION	NO.	BY	CK	APP
xx-xx-xx	xxxxxxx	x	xx		

Scale 1/4"=1'0"

DESIGNED bet
DETAILED
CHECKED bet
APPROVED
DATE 07-29-2010

HUBER TECHNOLOGY
Huntersville, NC 28078

PROJECT NO. 000000_299062

Guadalupe, CA

RakeMax 2300x452x6;
WAP size 2

FIG no. 1/1

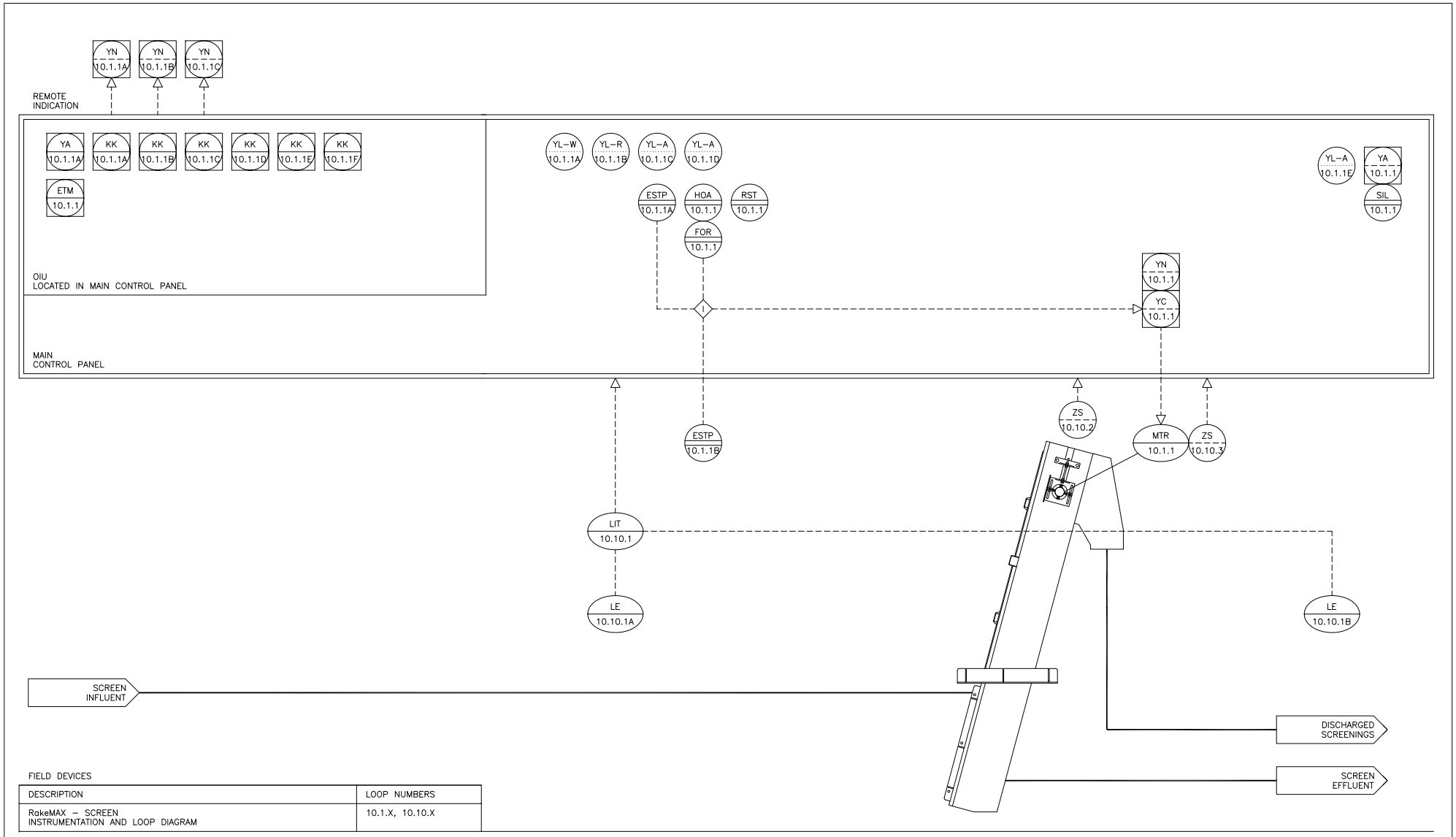

FIELD DEVICES

DESCRIPTION	LOOP NUMBERS
RakeMAX – SCREEN INSTRUMENTATION AND LOOP DIAGRAM	10.1.X, 10.10.X

NOTES:
1. SYMBOLS AND DESCRIPTIONS USED ARE THOSE PUBLISHED IN THE INSTRUMENT SOCIETY OF AMERICA, ISA. PLEASE REFER TO THEIR PUBLICATIONS FOR FURTHER DETAIL.
2. THESE DETAILS ARE BASED ON TYPICAL INSTALLATIONS, AND ARE SUBJECT TO CHANGE BASED ON SPECIFIC PROJECT REQUIREMENTS.

DATE	REVISION	NO.	BY	CK	APP

DESIGNED	CCC
DETAILED	
CHECKED	ALS
APPROVED	
DATE	05/01/09

HUBER TECHNOLOGY
9805 NorthCross Center Court, Suite H
Huntersville, NC 28078
Tel. 704-949-1010
usainfo@huber-technology.com

RakeMAX – SCREEN
TYPICAL PID DIAGRAM

OIU DETAIL

SCALE: NONE

PROJECT NUMBER:

DRAWING NO: RakeMAX_PIDA1

SHEET 1 OF 3

TAG	DESCRIPTION	FUNCTION
ESTP 10.1.1A	PUSHBUTTON – PANEL MOUNTED EMERGENCY STOP MUSHROOM HEAD, PUSH–PULL TYPE	PROVIDES OPERATOR WITH PROVISION TO STOP ALL MOTORS AND SOLENOIDS IN THE EVENT OF AN EMERGENCY
ESTP 10.1.1B **	PUSHBUTTON – FIELD MOUNTED EMERGENCY STOP MUSHROOM HEAD, PUSH–PULL TYPE	PROVIDES OPERATOR WITH PROVISION TO STOP ALL MOTORS AND SOLENOIDS IN THE EVENT OF AN EMERGENCY
FOR 10.1.1	SELECTOR SWITCH SCREEN FOR–OFF–REV FOR CAN BE LOCATED IN PANEL OR LCS*	PROVIDES OPERATOR WITH PROVISION TO SELECT FORWARD, OFF, OR REVERSE WHILE OPERATING THE SCREEN IN HAND
HOA 10.1.1	SELECTOR SWITCH SCREEN HAND–OFF–AUTO HOA CAN BE LOCATED IN PANEL OR LCS*	PROVIDES OPERATOR WITH PROVISION TO SELECT HAND, OFF, OR AUTO
LE 10.10.1A	CHANNEL ULTRASONIC LEVEL TRANSMITTER	LEVEL ELEMENT PART OF LEVEL CONTROLLER
LE 10.10.1B	CHANNEL ULTRASONIC LEVEL TRANSMITTER	LEVEL ELEMENT PART OF LEVEL CONTROLLER
LIT 10.10.1	CHANNEL ULTRASONIC LEVEL TRANSMITTER	PROVIDES LEVEL INDICATION TO THE MAIN CONTROL PANEL STANDARD SENSOR: HYDRORANGER 200
MTR 10.1.1	SCREEN DRIVE MOTOR	
RST 10.1.1	PUSHBUTTON SYSTEM RESET FLUSH HEAD, MOMENTARY	PROVIDES OPERATOR WITH PROVISION TO RESET SYSTEM FAULTS
SIL 10.1.1 **	PUSHBUTTON ALARM SILENCE	SILENCES AUDIBLE SYSTEM FAULT ALARM
YA 10.1.1 **	HORN COMMON ALARM HORN	PROVIDES AUDIBLE INDICATION OF SYSTEM FAULT
YC 10.1.1	SCREEN CALL TO RUN VARIABLE FREQUENCY DRIVE – STANDARD	PROVIDES SCREEN WITH CALL FORWARD AND CALL REVERSE COMMANDS
YL–A 10.1.1C	INDICATOR LIGHT – AMBER SCREEN OVERLOAD	PROVIDES OPERATOR INDICATION THAT THE SCREEN HAS SHUTDOWN DUE TO AN OVERLOAD
YL–A 10.1.1D **	INDICATOR LIGHT – AMBER HIGH LEVEL	PROVIDES OPERATOR INDICATION THAT THE LEVEL OF MATERIAL IN THE SCREEN IS ABOVE THE HIGH LEVEL SETPOINT
YL–A 10.1.1E **	INDICATION BEACON – AMBER COMMON ALARM	PROVIDES OPERATOR INDICATION OF A SYSTEM FAULT
YL–R 10.1.1B	INDICATOR LIGHT – RED SCREEN RUNNING	PROVIDES OPERATOR INDICATION THAT THE SCREEN IS RUNNING
YL–W 10.1.1A	INDICATOR LIGHT – WHITE CONTROL POWER ON	PROVIDES OPERATOR INDICATION THAT CONTROL POWER IS PRESENT AND ALL SAFETY INTERLOCKS ARE ENABLED
YN 10.1.1	CURRENT MONITOR SCREEN HIGH CURRENT	PROVIDES SCREEN OVERLOAD PROTECTION PROVIDED BY VFD
YN 10.1.1A	REMOTE INDICATION SCREEN RUNNING	PROVIDE REMOTE INDICATION THAT SCREEN IS RUNNING TYPICALLY 120VAC, 5AMP DRY CONTACT
YN 10.1.1B	REMOTE INDICATION SCREEN OVERLOAD	PROVIDE REMOTE INDICATION THAT SCREEN IS OVERLOADED TYPICALLY 120VAC, 5AMP DRY CONTACT

DESCRIPTION	LOOP NUMBERS
RakeMAX – SCREEN INSTRUMENTATION AND LOOP DIAGRAM	10.1.X, 10.10.X

TAG	DESCRIPTION	FUNCTION
YN 10.1.1C	REMOTE INDICATION HIGH LEVEL	PROVIDE REMOTE INDICATION THAT SCREEN HAS HIGH LEVEL TYPICALLY 120VAC, 5AMP DRY CONTACT
ZS 10.10.2 **	PROXIMITY SWITCH SCREEN HOME SWITCH	DETERMINES THE HOME POSITION OF THE RAKE
ZS 10.10.3	PROXIMITY SWITCH SCREEN OVERTORQUE	PROVIDES INDICATION THAT SCREEN IS OVERTORQUED

DESCRIPTION	LOOP NUMBERS
RakeMAX – SCREEN INSTRUMENTATION AND LOOP DIAGRAM	10.1.X, 10.10.X

TAG	DESCRIPTION	FUNCTION
ETM 10.1.1	ELAPSED TIMER METER SCREEN RUN TIME	PROVIDES OPERATOR TOTALIZED MOTOR RUN TIME ON HMI ACCESSIBLE THROUGH OIU
YA 10.1.1A	ALARM INDICATION SCREEN ALARM	PROVIDES OPERATOR DISCRIPTION OF CURRENT SYSTEM FAULT ACCESSIBLE THROUGH OIU
KK 10.1.1A	SETPOINT SCREEN – OFF–DELAY TIME SETPOINT: 10 SEC. RANGE: 1–60 SEC.	SETPOINT ACCESSIBLE THROUGH OIU
KK 10.1.1B	SETPOINT SCREEN – REPEAT CYCLE OFF TIME SETPOINT: 60 MIN. RANGE: 1–180 MIN.	SETPOINT ACCESSIBLE THROUGH OIU
KK 10.1.1C	SETPOINT SCREEN – FAULT DWELL TIME SETPOINT: 5 SEC. RANGE: 1–10 SEC.	SETPOINT ACCESSIBLE THROUGH OIU
KK 10.1.1D	SETPOINT SCREEN – REVERSE RUN TIME SETPOINT: 25 SEC. RANGE: 1–180 SEC.	SETPOINT ACCESSIBLE THROUGH OIU
KK 10.1.1E	SETPOINT SCREEN – FAULT CYCLE COUNTER SETPOINT: 1 CYCLES. RANGE: 1–5 CYCLES	SETPOINT ACCESSIBLE THROUGH OIU
KK 10.1.1F **	SETPOINT SCREEN – ZERO MOTION ON–DELAY TIMER SETPOINT: 15 SEC. RANGE: 1–999 SEC.	SETPOINT ACCESSIBLE THROUGH OIU

DESCRIPTION	LOOP NUMBERS
RakeMAX – SCREEN INSTRUMENTATION AND LOOP DIAGRAM	10.1.X, 10.10.X

NOTES:
1. SYMBOLS AND DESCRIPTIONS USED ARE THOSE PUBLISHED IN THE INSTRUMENT SOCIETY OF AMERICA, ISA. PLEASE REFER TO THEIR PUBLICATIONS FOR FURTHER DETAIL.
2. THESE DETAILS ARE BASED ON TYPICAL INSTALLATIONS, AND ARE SUBJECT TO CHANGE BASED ON SPECIFIC PROJECT REQUIREMENTS.
3. * DEVICES THAT MAY BE REMOVED FROM CONTROL PANEL DOOR AND MOUNTED NEAR EQUIPMENT IN A LCS.
4. ** INDICATES OPTIONAL ITEM OR OPTIONAL UPGRADE.

DATE	REVISION	NO.	BY	CK	APP

DESIGNED	CCC
DETAILED	
CHECKED	ALS
APPROVED	
DATE	05/01/09

HUBER TECHNOLOGY
9805 NorthCross Center Court, Suite H
Huntersville, NC 28078
Tel. 704-949-1010
usainfo@huber-technology.com

RakeMAX – SCREEN
TYPICAL PID DIAGRAM

OIU DEATIL

SCALE: NONE

PROJECT NUMBER:

DRAWING NO: RakeMAX_PIDA2

SEQUENCE OF OPERATION

CONTROL POWER ON–DELAY:
EACH TIME THE CONTROL PANEL POWER SUPPLY IS CYCLED, THE PLC WILL ALLOW ALL SOLID STATE DEVICES TO BECOME FULLY ENERGIZED BEFORE ENABLING THE CONTROL POWER CIRCUIT.

SCREEN MODES OF OPERATION:
HAND: WHEN THE SCREEN SELECTOR IS IN THE HAND POSITION THE SCREEN WILL CYCLE ON AN OFF WITH THE SCREEN FOR–OFF–REV SELECTOR.
FOR: WHEN THE SCREEN SELECTOR IS IN THE HAND POSITION AND THE FORWARD DIRECTION IS SELECTED, THE SCREEN WILL RUN CONTINUOUSLY IN THE FORWARD DIRECTION.
REV: WHEN THE SCREEN SELECTOR IS IN THE HAND POSITION AND THE REVERSE DIRECTION SELECTED, THE SCREEN WILL RUN IN THE REVERSE DIRECTION. THIS SWITCH WILL SPRING RETURN FROM REV TO OFF.
AUTO: WHEN THE SCREEN SELECTOR IS IN THE AUTO POSITION THE SCREEN WILL BEGIN TO RUN DUE TO ANY ONE OF THE FOLLOWING CONDITIONS:

- LEVEL RAISED AND REMAINED ABOVE THE START LEVEL SETPOINT FOR THE TIME SET IN THE PLC
- SCREEN OFF TIME HAS REACHED MAXIMUM TIME SET IN PLC
- SYSTEM RESET PUSHBUTTON PRESSED AND HELD FOR TIME SET IN PLC

ONCE A CYCLE IS STARTED THE SCREEN WILL RUN CONTINUOUSLY IN THE FORWARD DIRECTION UNTIL THE LEVEL DROPS BELOW THE START LEVEL SETPOINT, PER THE TIME SETTING SET IN THE SCREEN OFF DELAY TIMER.

SCREEN HIGH SPEED (OPTIONAL):
THE SCREEN WILL OPERATE AT HIGH SPEED ONCE THE LEVEL REACHES THE HIGH LEVEL SETPOINT. THE SCREEN WILL CONTINUE TO OPERATE AT HIGH SPEED UNTIL THE LEVEL DROPS BELOW THE START LEVEL SETPOINT.

NOTE: HIGH SPEED OPERATION WILL ONLY TAKE PLACE WHEN OPERATING IN THE FORWARD DIRECTION.

EMERGENCY STOP:
WHEN ANY OF THE E–STOP PUSHBUTTONS ARE PRESSED THE SCREEN WILL STOP IMMEDIATELY, THE CONTROL POWER ON LIGHT WILL DE–ENERGIZE. TO RESET, INSURE ALL E–STOPS ARE ENABLED, AND PRESS THE SYSTEM RESET PUSHBUTTON.

NOTE: IF THE POWER TO THE PANEL IS INTERRUPTED, THE EQUIPMENT MAY CYCLE IMMEDIATELY ONCE THE POWER IS RESTORED. PRESSING THE SYSTEM RESET PUSHBUTTON AFTER A POWER OUTAGE WILL NOT BE REQUIRED.

OIU – INFORMATION:
1. THE OIU WILL DISPLAY THE ELAPSED MOTOR RUN TIME.
2. ALL ADJUSTABLE SETPOINTS CAN BE ACCESSED AND ADJUSTED THROUGH THE OIU.
3. THE PRESENT FAULT WILL BE DISPLAYED ON THE OIU.
4. THE HISTORY OF ALL PAST FAULTS CAN BE ACCESSED THROUGH THE OIU.

FAULTS:
SCREEN MOTOR OVERLOAD – WHEN THE SCREEN MOTOR OVERLOAD IS TRIPPED THE SCREEN WILL STOP IMMEDIATELY AND THE SCREEN FAULT LIGHT WILL BE ENERGIZED.

SCREEN OVERLOAD SHUTDOWN – IF HIGH CURRENT IS MEASURED WHILE THE SCREEN IS OPERATING IN THE FORWARD DIRECTION, THEN THE SCREEN WILL TRY TO CLEAR THE FAULT AS DETAILED BELOW IN THE JAM LOGIC SEQUENCE. IF THE JAM LOGIC SEQUENCE IS UNSUCCESSFUL THEN THE SCREEN WILL SHUTDOWN IMMEDIATELY AND THE SCREEN FAULT PILOT LIGHT WILL BE ENERGIZED.

SCREEN HIGH TORQUE – IF HIGH TORQUE IS MEASURED WHILE THE SCREEN IS OPERATING IN THE FORWARD DIRECTION, THEN THE SCREEN WILL TRY TO CLEAR THE FAULT AS DETAILED BELOW IN THE JAM LOGIC SEQUENCE. IF THE JAM LOGIC SEQUENCE IS UNSUCCESSFUL THEN THE SCREEN WILL SHUTDOWN IMMEDIATELY AND THE SCREEN FAULT PILOT LIGHT WILL BE ENERGIZED.

SCREEN ZERO MOTION (OPTIONAL) – IF THE SCREEN IS RUNNING AND THE SCREEN HOME POSITION PROXIMITY SWITCH IS NOT TRIGGERED BEFORE THE ZERO SPEED ON–DELAY TIMER EXPIRES, THEN THE SCREEN WILL SHUTDOWN IMMEDIATELY AND THE SCREEN FAULT PILOT LIGHT WILL BE ENERGIZED.

DESCRIPTION	LOOP NUMBERS
RakeMAX – SCREEN SEQUENCE OF OPERATION	10.1.X, 10.10.X

SEQUENCE OF OPERATION

JAM LOGIC:
WHEN A FAULT CONDITION OCCURS THAT REQUIRES THE JAM LOGIC SEQUENCE, THE SCREEN WILL STOP AND DWELL, RUN IN REVERSE, STOP AND DWELL, THEN CONTINUE ITS CYCLE. IF THE FAULT CONDITION PERSISTS, THE SCREEN WILL CONTINUE TO TRY AND CLEAR THE FAULT. IF THE NUMBER OF ATTEMPTS TO CLEAR THE FAULT EXCEEDS THE NUMBER ALLOWED WITHIN 5 MINUTES, THEN THE SCREEN WILL SHUTDOWN IMMEDIATELY AND THE SCREEN FAULT PILOT LIGHT WILL BE ENERGIZED. NOTE: IF THE FAULT CONDITION OCCURS WHILE THE SCREEN IS OPERATING IN THE REVERSE DIRECTION OR WHILE IN HAND, THE SCREEN WILL SHUTDOWN IMMEDIATELY AND THE SCREEN FAULT PILOT LIGHT WILL BE ENERGIZED.

ALL OF THE ABOVE FAULTS CAN BE RESET BY PRESSING THE SYSTEM RESET PUSHBUTTON.

HIGH LEVEL LIGHT (OPTIONAL) – IF THE LEVEL RAISES ABOVE THE HIGH LEVEL SETPOINT SET IN THE ULTRASONIC LEVEL CONTROLLER, THE HIGH LEVEL LIGHT WILL BE ENERGIZED. THE LIGHT WILL REMAIN ENERGIZED UNTIL THE LEVEL DROPS BELOW THE HIGH LEVEL SETPOINT.

ALARM HORN (OPTIONAL):
WHEN ANY OF THE ABOVE FAULTS OCCUR THE ALARM HORN WILL BE ENERGIZED. THE ALARM SILENCE PUSHBUTTON CAN BE PRESSED AT ANY TIME TO SILENCE THE ALARM. NOTE: PRESSING THE ALARM SILENCE PUSHBUTTON WILL NOT RESET THE FAULT.

ALARM BEACON (OPTIONAL):
WHEN ANY OF THE ABOVE FAULTS OCCUR THE ALARM BEACON WILL BE ENERGIZED. THE BEACON WILL REMAIN ENERGIZED UNTIL THE FAULT HAS BEEN ADDRESSED AND THE SYSTEM RESET HAS BEEN PRESSED.

DESCRIPTION	LOOP NUMBERS
RakeMAX – SCREEN SEQUENCE OF OPERATION	10.1.X, 10.10.X

DATE	REVISION	NO.	BY	CK	APP

DESIGNED	CCC
DETAILED	
CHECKED	ALS
APPROVED	
DATE	05/01/09

HUBER TECHNOLOGY
9805 NorthCross Center Court, Suite H
Huntersville, NC 28078
Tel. 704-949-1010
usainfo@huber-technology.com

RakeMAX – SCREEN
TYPICAL PID DIAGRAM

OIU DETAIL

SCALE: NONE

PROJECT NUMBER:

DRAWING NO: RakeMAX_PIDA3
SHEET 3 OF 3

Duperon®
PRELIMINARY LIQUIDS/SOLIDS SEPARATION TECHNOLOGIES

Now, there's an easier way!℠

DATE: March 31, 2010

Mechanically Cleaned Bar Screen
Budgetary Proposal Number 5117

Guadalupe CA WWTP

To:
Dudek
Michael Hill, PE

Sales Rep:
JBI Water & Wastewater Equipment
Tarn Victor
Phone: 949-859-2333
Email: tarnvictor@jbiwater.com

From:
Duperon Corporation
Chris La Pan
Phone: (800) 383-8479
Fax: (989) 754-2175
Email: clapan@duperon.com

Budgetary
Proposal Number
5117

Guadalupe CA WWTP

Scope of Supply:

Full Penetration, Fine Screen Model FlexRake® - Stainless Steel Link Driven, Front Cleaning, Front Return Mechanically Cleaned Bar Screen

- Head Sprocket Only Design – no critical components under water
- Continuous Cleaning, top to bottom, the entire width of scraper
- Continuous Cleaning without an operator
- Scrapers of UV Stabilized UHMW and/or Stainless Steel

Controls Package

- Nema 4X relay based controls with HOA capability

Spare Parts

- Standard Spare Parts Package(s)

On Site Technical Assistance

- (1) day, (1) technician, 8 hours total at site

Operation and Maintenance Manuals

- 6 Hard Copies

Warranty

- One Year Standard material and workmanship
- Five Year on all rotating parts

Freight to Jobsite

Price: $118,000

Price is valid for 30 days.

Budgetary
Proposal Number
5117

Guadalupe CA WWTP

Submittals: 4 weeks after approved purchase order

Equipment Delivery: 8-12 weeks after approval

Options:

Duperon® Washer Compactor – Positive Displacement, Dual Auger System

- Non-clogging: positive displacement technology—what comes in must go out
- 60% dry solids
- Simple and durable dual auger design
- Various discharge configurations including up to 10 ft of discharge horn
- Available in 304 SSTL (quoted) and 316 SSTL

$ 45,000

Enclosure

- Stainless Steel Full Enclosure covering from deck to discharge
- Access panels available in Stainless Steel and/or Plexiglas
- Available in 304 SSTL and 316 SSTL

$ 10,000

Controls

- Relay based Washer Compactor controls with HOA functionality
- Level controls, PLC based controls, and other sophistication

$ Available upon Approval of Scope

Clarifications:

Not Included:

- Bonding, tariffs, permits, taxes, liquidated damages.
- On-site conditions affecting the work described or which affects the installation of the FlexRake.
- Conduit, control stands, control mounting wiring, junction boxes, or other control accessories.
- Stilling wells.
- Any site work or installation tasks (ie, unloading, placement, dewatering, diving, clearing the forebay, wiring, provision of concrete structure, etc.), equipment (such as cranes, hammer drills, etc.), or anchor bolts.
- Release of proprietary information.
- Engineering: Does not include drawings other than those for the FlexRake.
- Discharge system.
- Pre-installation tasks such as touch-up painting (paint will be provided), checking bolts for tightness, removal of shipping containment devices, etc.
- Vibration and noise testing.
- Offloading or handling of delivered equipment.

Budgetary
Proposal Number
5117

Guadalupe CA WWTP

Proposal Terms:

- Subject to acceptance by our credit department.
- Provision for retainage is not included in this proposal.
- Pricing is subject to changes based upon time of order and current stainless steel prices.
- Terms may be negotiated upon request

Right to Refuse:

This proposal is based upon the information available at this time and may be impacted by future specifications, scope, and other requirements. This information may be relied upon and used for project estimating purposes only. Note In the event of cancellation of a purchase order or contract, Duperon Corporation will be compensated for all costs that it or its subcontractors have incurred for performance of work in good faith. Due to the current volatility of the steel market, prices may be impacted at time of order. Please be advised that Duperon Corporation retains the right to revise, withdraw, or negotiate this offer at any time prior to signing a material contract.

Proposal Number

5117

Guadalupe CA WWTP

Equipment Scope of Supply:

1 Full Penetration Fine Screen

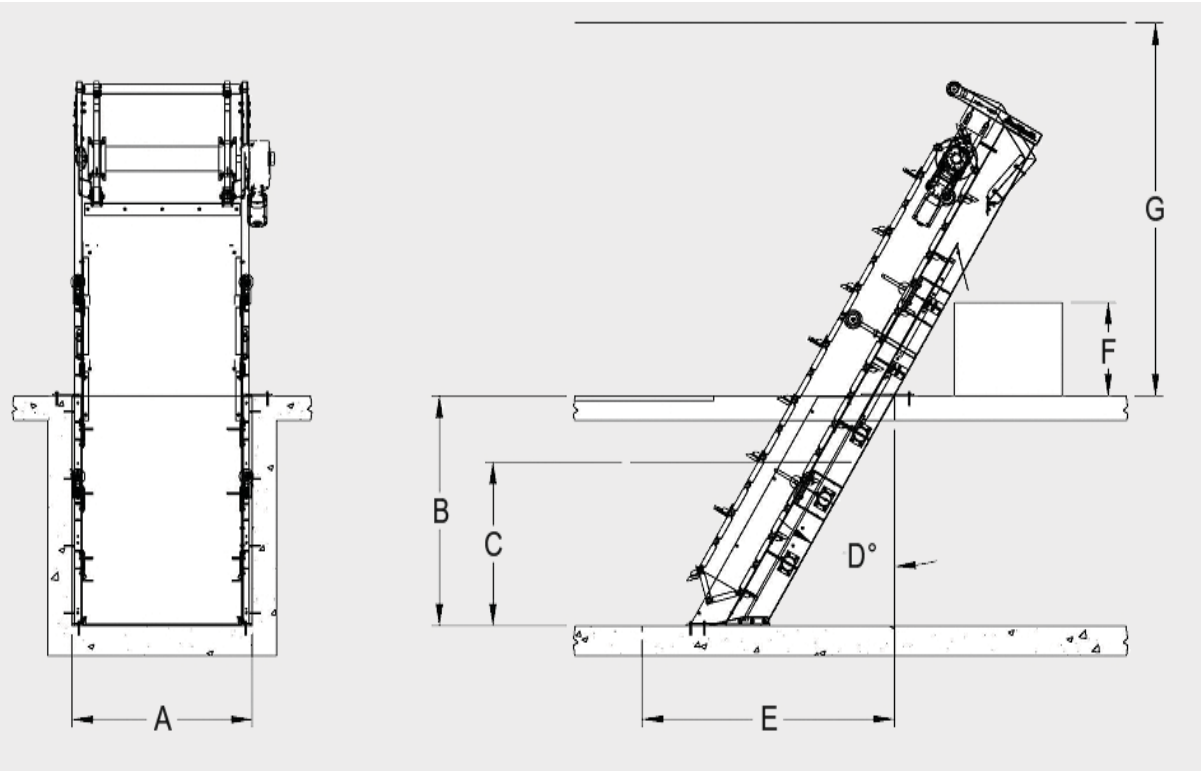

Site Data:

A) Channel Width in Feet	2.5	E) Channel Depth in Feet	
B) Channel Height in Feet	2.5	F) Container Height in Feet	4
C) Max Water Level in Feet		G) Overhead Constraint in Feet	
D) Angle (from Vertical)	30	H) Operating Deck (if diff than B)	

Bar Screen Design Data:

Clear Bar Opening in Inches	0.25	Material of Construction	304 SSTL
Average Flow Rate in MGD	1 MGD	Link Material	304 SSTL
Max Flow Rate in MGD	4 MGD	Approximate Weight in Tons	1

Guadalupe CA
WWTP Improvements
Duperon Corporation Proposal No. 5147
March 31, 2010

FLOW CALCULATIONS												
MAX. FLOW 4 MGD per channel							Head Loss		@ 25% Blockage		@ 50% Blockage	
	Slot (in)	Bar (in)	Intake Width (ft)	Req'd. Liquid Level (ft)	Approach Velocity (fps)	Slot Velocity (fps)	(ft)	(in)	(ft)	(in)	(ft)	(in)
	0.25	0.25	2.50	2.00	1.24	3.18	0.20	2.40	0.37	4.39	0.87	10.39

FLOW CALCULATIONS												
AVG FLOW 1 MGD per channel							Head Loss		@ 25% Blockage		@ 50% Blockage	
	Slot (in)	Bar (in)	Intake Width (ft)	Req'd. Liquid Level (ft)	Approach Velocity (fps)	Slot Velocity (fps)	(ft)	(in)	(ft)	(in)	(ft)	(in)
	0.25	0.25	2.50	1.00	0.62	3.18	0.23	2.72	0.39	4.70	0.89	10.69

NOTE: These calculations are a rough estimation based upon the information available at this time in order to maintain approximately a 3 fps slot velocity for peak flow. Flow characteristics calculated for clean water and not derated for debris.

NOTE: Duperon strongly recommends a minimum of 1 ft water depth at all times the unit is in operation to get an optimal amount of screening area.

Project Name:	Guadalupe WWTP
State/Country:	CA
Rep.Company:	Gierlich-Mitchell
Offer:	10-07-06 GUA
Date Offer:	6-Jul-10

V3.2

Budget Offer # 10-07-06 GUA
Guadalupe WWTP

Gentlemen,
Thank you for your request for a screen and screenings handling package proposal. Headworks® is pleased to offer you the Headworks® Mahr® Bar Screen Model MS1 and Headworks® Screwpactor™ Shafted Spiral Compactor for this project.

The Headworks® Mahr® Bar Screen design offers the following features:

- Stainless Steel Construction - for corrosion resistance
- Low Profile - requires less than 8' of head space
- Low Headloss - even with 1/4" openings
- High Hydraulic Capacity - about 2 MGD per ft2 of screen area
- Automatic Reverse - to remove obstructions

The Headworks® Screwpactor™ design offers the following features:

- Stainless Steel Construction - for corrosion resistance
- High Performance Shafted Spiral, Carbon Steel
- Flexible Discharge Point
- Screenings Wash Zone

Included are our Budget Offer, Scope of Supply and General Terms and Conditions, which are all a part of the offer.

If you have any questions or comments, please do not hesitate to contact our local Sales Representative, or this office.

Yours Sincerely,

Aby Varghese
Project Manager

800 Wilcrest Dr.,Suite 340
Houston, TX 77042
www.headworksusa.com

Tel.: 713.647.6667
Fax.: 713.647.0999
Email: hw@headworksusa.com

Project Name:	Guadalupe WWTP
State/Country:	CA
Rep.Company:	Gierlich-Mitchell
Offer:	10-07-06 GUA
Date Offer:	6-Jul-10

V3.2

Sales Representative:
Mr. Ryan McCloskey
Gierlich-Mitchell, Inc.
10533 Progress Way, Suite A
Cypress, CA 90630
714.236.6070

Project Summary	Item	Units	US $
Headworks® Mahr® Bar Screen	1	1	177,614
SW W220	2	1	62,305
TOTAL PROJECT COSTS			**239,919**
Adder for 316 SS Bar Screen			17,883
Adder for 316 Screwpactor			4,378

Project Name:	Guadalupe WWTP
State/Country:	CA
Rep.Company:	Gierlich-Mitchell
Offer:	10-07-06 GUA
Date Offer:	6-Jul-10

V3.2

Item:	**1**
Type of Product	**Mahr® Bar Screen**

Project Name:	**Guadalupe WWTP**	
Offer Number	**10-07-06 GUA**	
Item Number:	**1**	
Screen Name		
No. of Screens	**1**	
Screen Data	**Feet**	**Meter**
SOL Screen Overall Length	24.05	7.33
OF Operating Floor to Channel Invert	15.87	4.84
CD Channel Depth	2.70	0.82
CW Channel Width	2.50	0.76
SW Screen Total Width	2.34	0.71
SFW Screen Field Width (Net)	1.52	0.46
WD Water Depth	3.00	0.91
DL Discharge Level	5.00	1.52
SFL Screen Field Length	3.66	1.11
BS Bar spacing	0.25 inch	6.35 mm
Wall Recess	NO	
Floor Recess	NO	
Screen grouted when in recess	NO	
# of Sections/Pieces	1	
Material	SS 304	
Chain Roller Type	Stainless	
Top Enclosed	Yes	
Installation Angle (Degree)	90 deg	
Weight (per screen)	3556 lb	1613 kg
Pull Out Type	Yes	
Pivot Type	NO	
Q max. Specified	3.31 mgd	0.15 m3/s
Q max. (v-Ch. = 0.9m/sec or 3'/s)	9.03 mgd	0.42 m3/s
Q max. (v-Ch. = 0.6m/sec or 2'/s)	6.02 mgd	0.28 m3/s
Headloss at 2'/sec channel velocity	9.19 inch	23.34 cm
Headloss at 3'/sec channel velocity	10.73 inch	27.26 cm

Screen Scope of Supply	**Supplied**
Headworks® Mahr® Bar Screen	YES
Spare Parts	NO
Control Panel (Main NEMA 4 & Local NEMA 7)	YES
Ultrasonic Level Sensor	YES
Interconnecting Wiring	NO
Training (O&M)	YES

800 Wilcrest Dr.,Suite 340
Houston, TX 77042
www.headworksusa.com

Tel.: 713.647.6667
Fax.: 713.647.0999
Email: hw@headworksusa.com

Project Name:	Guadalupe WWTP
State/Country:	CA
Rep.Company:	Gierlich-Mitchell
Offer:	10-07-06 GUA
Date Offer:	6-Jul-10

V3.2

Item:	**2**
Type of Product	**Screwpactor™**

Type Quoted:	**SW W220**
System Components	**Supplied**
Inlet Hopper	YES
Discharge Tube	YES
Motor	YES
Continuous Bagging Unit	NO
Gear Reducer	YES
Solenoid Valves	NO
Material	304SS

Spare Parts Screwpactor™:	**Supplied**
Shafted Spiral	NO
Spiral Brush	NO
Reducer Seals/Bearings	NO
Drive Unit (Motor/Gear Reducer)	NO

Screwpactor™ Scope of Supply	**Supplied**
Item	SW W220
Spare Parts	NO
Control Panel (Main NEMA 4 & Local NEMA 7)	YES
Continuous Bagging Unit	NO
Training (O&M)	YES

800 Wilcrest Dr.,Suite 340
Houston, TX 77042
www.headworksusa.com

Tel.: 713.647.6667
Fax.: 713.647.0999
Email: hw@headworksusa.com

Item No.	Part	Material	Size/Description
1	Screwpactor Body	Stainless Steel	11ga
2	Screw Assembly	Carbon Steel	Ø9"
3	Bearing	-	
4	Support Stands	Stainless Steel	5/16"
5	Body Flanges	Stainless Steel	1/2"
6	Discharge Tube	Stainless Steel	11ga
7	Inlet Hopper	Stainless Steel	14ga
8	Spary Nozzels	Brass	-
9	DrainPan	Stainless Steel	14ga
10	Gearbox Motor	Cast Iron	-
11	Wear Bars	Carbon Steel	3/8"
12	Clamps	Stainless Steel	Destaco
13	Cover	Stainless Steel	14ga
14	Perforated Plate	Stainless Steel	11ga/Ø3/16"
15	Wash water Connection	-	Ø1" NTP
16	Flush Water Connection	-	Ø3/4" NTP
17	Drain Pan Outlet	-	Ø3"

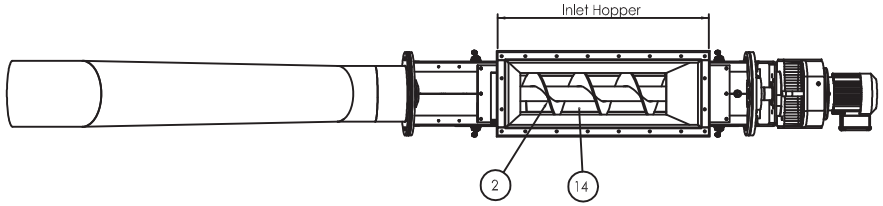

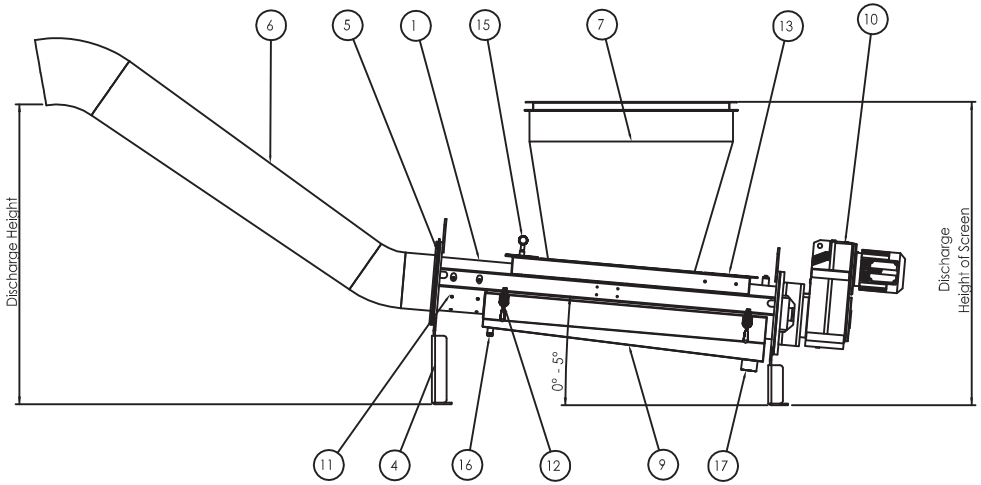

0	For Information	CDS	03/06/06
Rev	DESCRIPTION	NAME	DATE

APPROVED BY	DATE		
CHECKED BY	DATE		
DRAWN BY	DATE	CDS	03/06/06

SCALE: 1:24
ORDER NO:
REFERENCE DWG:
JOB NO
PLANT:
LOCATION:

Screwpactor
SW220
General Arrangement

No. 03 | Yr. 06 | SW220 | Rev. 0 | Sht. 1 of 1

Headworks Inc.
11011 Richmond Ave Suite 900
Houston, Texas 77042

Appendix B
Influent Pump Data Sheets

DRAFT

EQUIPMENT DATA SHEET

PROJECT INFORMATION

Project: Guadalupe WWTP Improvement Project **Job No.:** 6576
Prepared By: Michael Hill **Date:** 9/1/2010
Revised By: _____ **Date:** _____ **Rev. No.:** _____
Revised By: _____ **Date:** _____ **Rev. No.:** _____
Revised By: _____ **Date:** _____ **Rev. No.:** _____

PRELIMINARY DESIGN INFORMATION

Equipment Name: Influent Pumps
Specification Section: 11324 **Title :** Submersible Pumps
Equipment Location: Headworks
Equip. Type: Pumps **Equip. Service:** Wastewater (Screened Raw Sewage)
Equip. Dimensions: 6” inlet, 6” discharge, 12” impeller
Equip. Weight:
Materials of Construction: Cast Iron Impeller and Volute

Equip No.	Equipment Capacity	Motor/ Load (HP)	Standby Power	Motor Speed (RPM)	Equip Speed (RPM)	Maintenance	
						Type	Freq.
P-101	1,330 gpm	20	☐ Yes ☒ No	1,200			
P-102	1,330 gpm	20	☐ Yes ☒ No	1,200			
P-103	1,330 gpm	20	☐ Yes ☒ No	1,200			
			☐ Yes ☐ No				
			☐ Yes ☐ No				

No. of future additional units: _____

COMMENTS: Proposal does not include cost of installation

DESIGN DEVELOPMENT INFORMATION

GENERAL

	Manufacturer A	Manufacturer B	Manufacturer C	Manufacturer D
Specified MFGR	ITT Flygt	Yeomans	Cornell	
Model	NP3153.091MT	6123	6NNT-Sub-15-4	
Est. Cost/unit	$17,000	$17,340	$16,500	
Expected Lift				
Delivery Time				

(Catalog cut sheets and standard specification of specified manufacturers enclosed)

MECHANICAL

Inlet Pressure: _____ **Outlet Pressure:** _____

Inlet Diameter: 6” **Outlet Diameter:** 6”

SUPPORT UTILITIES

Water: ☐ None ☒ Potable ☐ Non-potable ☐ Utility

Capacity: 10 gpm, 40 psi

Drainage: ☐ None ☒ Hub Drain ☐ Floor Drain ☐ Floor Sink ☐ Size _____

Air: ☒ Utility ☐ Instrument ☐ None ☐ None ☐ None

Capacity: _____gpm, _____ psi

Lube Oil: ☐ None ☐ Lubricator

Hydraulic: ☐ None ☐ Power Pack

HVAC

Heat Loss: _____BTU/hr **Combustion Air:** _____scfm

EQUIPMENT INSTALLATION REQUIREMENTS

Equipment Mounting ☒ Base Plate ☐ Skid Frame ☐ Support Legs ☒ Guiderail

Structural Support ☐ Equip Pad ☐ Equip Base ☐ Isolation Base

☐ Piers ☐ Wall Brackets Height ____ft

Lifting Requirements ☐ None ☐ Lifting Eyes ☐ Monorail ☒ Davit Crane

Service Platforms ☐ Yes ☒ No

☐ Equip Supported ☐ Yes ☐ No ☐ Partial

ELECTRICAL

Motor Type ☐ Horizontal ☐ Induction ☐ Contstant Speed

☐ Vertical (Chamber) ☐ Synchronous ☐ Two Speed

☐ Totally Enclosed ☐ Wound Rotor ☐ Reversing (classifier)

☒ Submersible ☒ Variable Speed

Motor Duty ☒ Continuous ☐ Intermittent

Environment ☐ Indoor ☒ Outdoor

☐ Damp ☒ Wet ☒ Corrosive ☐ Hazardous

Variable Speed ☒ Adjustable Frequency

☐ DC – SCR

(If Applicable) ☐ Eddy Current

☐ Hydrostatice

☐ Other _____

ITT Water & Wastewater

PERFORMANCE CURVE

PRODUCT	TYPE
NP3153.091	MT

DATE	PROJECT	CURVE NO	ISSUE
2010-07-19	Guadalupe WWTP Infl Pumps	63-434-00-6030	6

	1/1-LOAD	3/4-LOAD	1/2-LOAD
POWER FACTOR	0.83	0.77	0.66
EFFICIENCY	87.5 %	89.0 %	89.0 %
MOTOR DATA	---	---	---

RATED POWER	20	hp
STARTING CURRENT ...	148	A
RATED CURRENT ...	26	A
RATED SPEED	1755	rpm
TOT.MOM.OF INERTIA ...	0.086	kgm2
NO. OF BLADES	2	

IMPELLER DIAMETER: 227 mm

MOTOR #	STATOR	REV
21-18-4AA	05YSER	12

FREQ.	PHASES	VOLTAGE	POLES
60 Hz	3	460 V	4

GEARTYPE	RATIO
---	---

COMMENTS

INLET/OUTLET: -/ 6 inch

IMP. THROUGHLET: ---

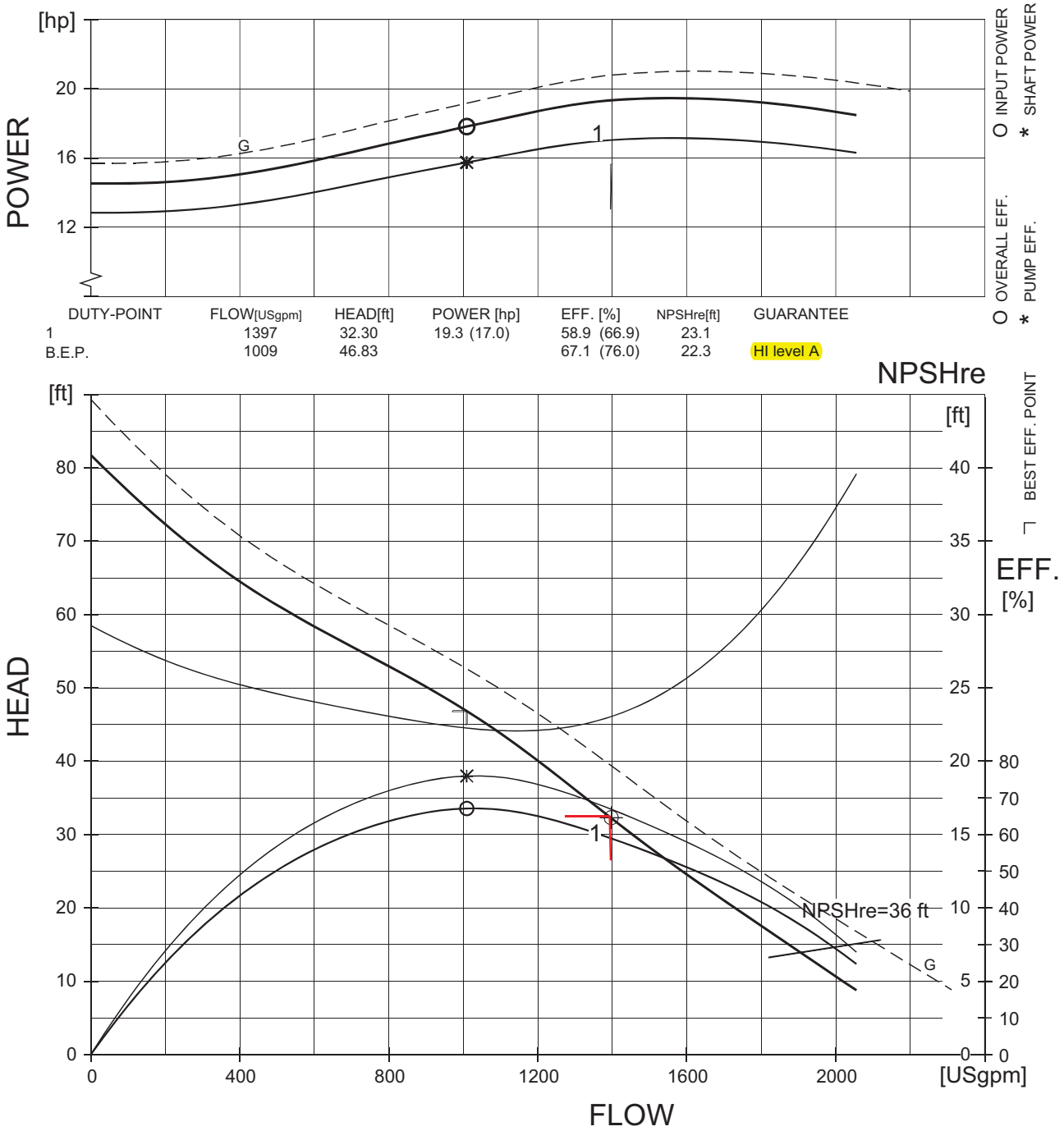

DUTY-POINT	FLOW[USgpm]	HEAD[ft]	POWER [hp]	EFF. [%]	NPSHre[ft]	GUARANTEE
1	1397	32.30	19.3 (17.0)	58.9 (66.9)	23.1	
B.E.P.	1009	46.83		67.1 (76.0)	22.3	HI level A

FLYPS3.1.6.5 (20090313)

NPSHre = NPSH3% + min. operational margin

Performance with clear water and ambient temp 40 °C

GUARANTEE BETWEEN LIMITS (G) ACC. TO

HI level A

VFD-Analysis - Performance

Project: Guadalupe CA WWTP - Influent Pumps

Created by:: ITT Flygt Corporation

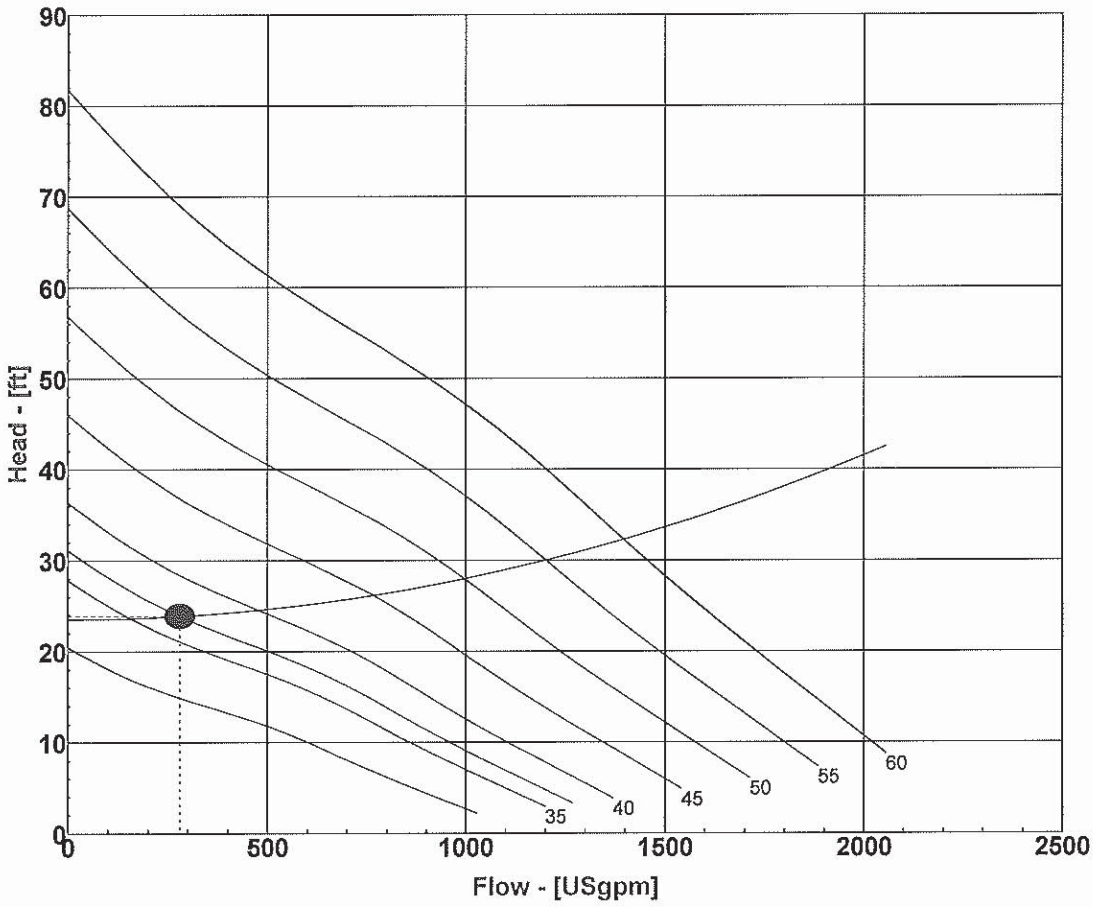

Pump: N 3153 63-434-00-6030

PRODUCT DATA

Imp. diam.: 227 mm

Rtd. pwr.: 20 hp

Vanes: 2

Throughlet: 0 inch

Connection: Single

VFD connection: 1-VFD pump

No of pumps: 1

Frequency: 37 Hz

Flow: 280.2 USgpm

Head: 23.9 ft

Pwr cons.: 3.3 kW

Overall eff: 38.6 %

Spec. energy: 193.8 kWh/Mg

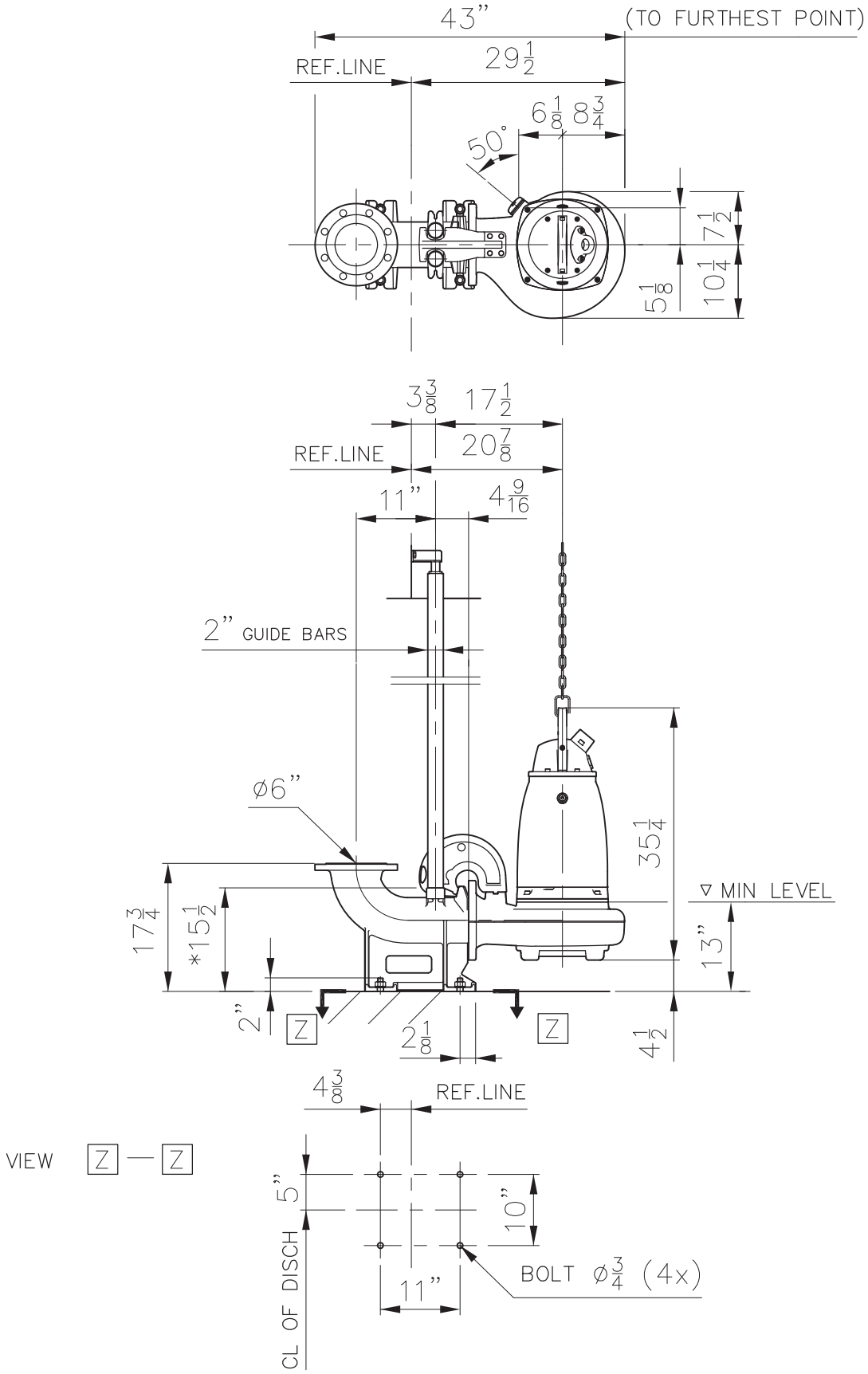

* DIMENSION TO ENDS OF GUIDE BARS

Weight (lbs)	
Pump	Disch
485	175

FLYGT AUTOCAD DRAWING	Denomination: Dimensional drwg NP,FP 3153 MT ø6"	Drawn by NK	Checked by SB	Date 081014
		Scale		Reg no 5399
		6504300		11

ITT
Water & Wastewater

FP/NP-3153

Lift Station Dimensions

Issued: 2/09 | Supersedes: 2/08

NOTES:

1. CONFIGURATION AND DIMS. SHOWN ARE SUGGESTED REQUIREMENTS ONLY. ALL DETAILS, INCLUDING SIZING OF PIT, TYPE, LOCATION AND ARRANGEMENT OF VALVES AND PIPING, ETC. ARE TO BE SPECIFIED BY THE CONSULTING ENGINEER AND ARE SUBJECT TO THEIR APPROVAL.
2. REFERENCE GENERIC DUPLEX LIFT STATION LAYOUT FOR ELEVATION VIEW.
3. LOCATE ANCHOR BOLTS USING INSIDE EDGE OF CLEAR OPENING AND PUMP CENTERLINE AS REFERENCE POINT. BOLT LOCATIONS MUST BE HELD TO MAINTAIN EXACT POSITION OF PUMP TO CLEAR OPENING.
4. ITT FLYGT MIX–FLUSH VALVE.

Simplex

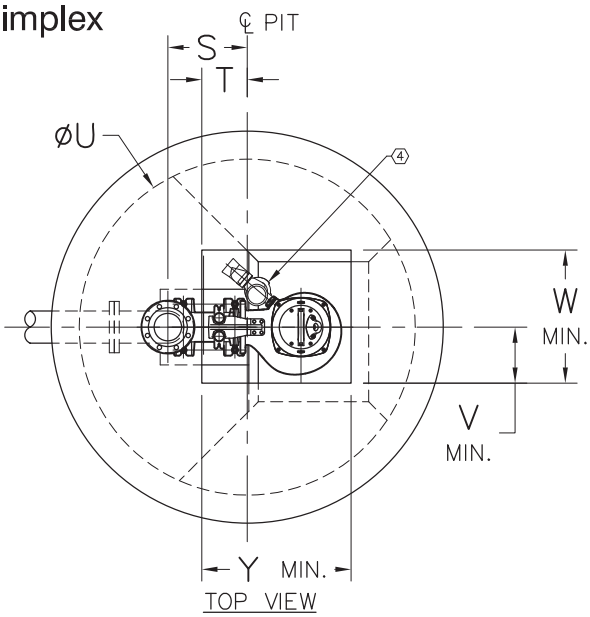

Duplex

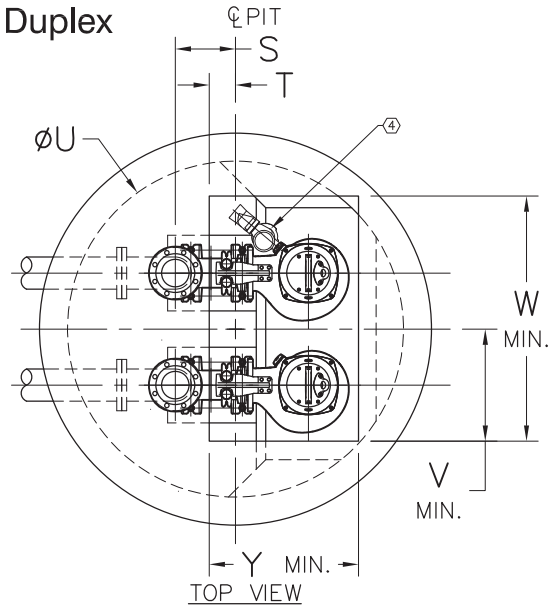

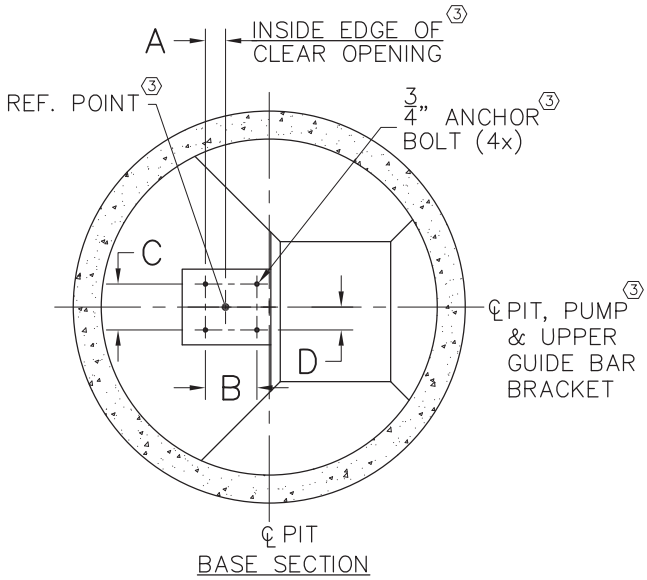

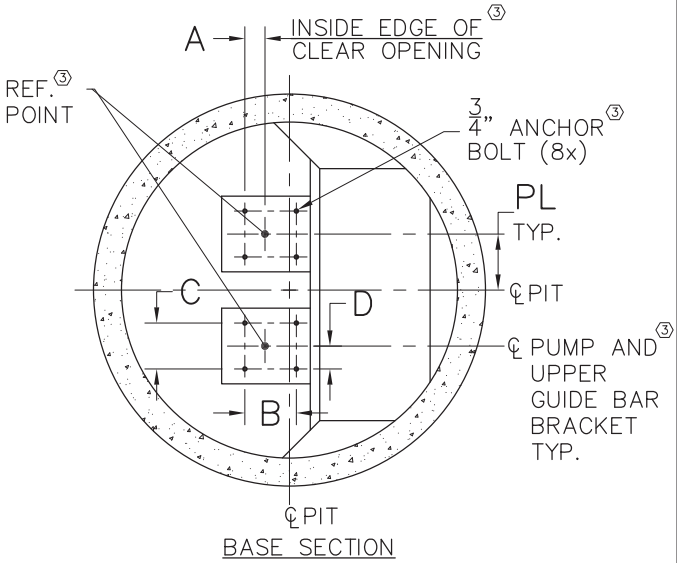

ALL DIMENSIONS ARE IN INCHES

MODEL	NOM. SIZE	VERSION					SIMPLEX						DUPLEX						
			A	B	C	D	S	T	U	V	W	Y	S	T	U	PL	V	W	Y
FP/NP	3"	SH	$2\frac{1}{2}$	$9\frac{7}{8}$	8	4	$21\frac{1}{4}$	$15\frac{1}{4}$	72	9	27	$29\frac{1}{2}$	$18\frac{3}{8}$	$12\frac{3}{8}$	72	11	20	49	$29\frac{1}{2}$
FP/NP	4"	SH	$2\frac{3}{4}$	$9\frac{7}{8}$	8	4	$19\frac{3}{4}$	$13\frac{1}{4}$	72	9	27	$29\frac{1}{2}$	$16\frac{1}{2}$	10	72	11	20	49	$29\frac{1}{2}$
FP/NP	4"	HT	$2\frac{3}{4}$	$9\frac{7}{8}$	8	4	$19\frac{3}{4}$	$13\frac{1}{4}$	72	11	$27\frac{1}{2}$	$30\frac{1}{2}$	$16\frac{1}{2}$	10	72	11	22	$49\frac{1}{2}$	$30\frac{1}{2}$
FP/NP	6"	MT	$4\frac{3}{8}$	11	10	5	$17\frac{3}{8}$	$9\frac{3}{4}$	72	12	$28\frac{1}{2}$	32	$12\frac{7}{8}$	$5\frac{1}{4}$	72	12	24	$52\frac{1}{2}$	32
NP	8"	LT	$5\frac{1}{2}$	11	10	5	$14\frac{1}{4}$	$5\frac{3}{8}$	72	14	$30\frac{1}{2}$	35	$16\frac{1}{2}$	$7\frac{5}{8}$	84	13	27	$56\frac{1}{2}$	35
NP	10"	LT	$14\frac{1}{8}$	$19\frac{3}{4}$	10	5	$23\frac{3}{4}$	13	96	$16\frac{1}{2}$	$35\frac{1}{2}$	40	$16\frac{3}{4}$	6	96	18	$34\frac{1}{2}$	$71\frac{1}{2}$	40

Pump Data

Curve id: 63-434-00-6030 Impeller: 434 Poles: 4 - pole Motor: 21-18-4AA Frequency: 60 Hz

Motor Data

Rated output power Hp (kW)	Ø	Nominal voltage (V)	Full load current (A)	Locked rotor current (A)	Locked rotor kVA	Locked rotor code letter kVA/Hp	Poles/rpm
20 (14.9)	3	460	26	148	118	G	4/1755
20 (14.9)	3	230	52	296	118	G	4/1755

Pump motor Hp	Efficiency			Power factor		
	100% load	75% load	50% load	100% load	75% load	50% load
20	87.5	89	89	0.83	0.77	0.66

Cable Data

HP	Cables	Volts	Max. length (Ft)	Cable size/Nominal OD.	Conductors (In one cable)	Type	Part number
20	1	230 460	165 675	#6/3-2-1-GC 1.22"-(31.0mm)	(3) 6 AWG (PWR) (2) 10 AWG (CTRL) (1) 8 AWG (GND) (1) 10 AWG (GC)	STD	942109

Available Discharge Connection Outlet Size

Outlet Drilled Flange	6"

Warm Liquid Data

Rtd. Amb. Temp.	Rtd. Curr.(1)	Rtd. Curr.(2)	De-rated Shaft Power
70° C / 158° F	22 A	45 A	16.8 Hp

Pump Data Sheet - Yeomans Pump, Aurora, IL

Company: Barrett Engineered Pumps
Name:
Date: 7/12/2010

Customer:
Project:
Location:
Quote #:
Item ID / Tag #:
Qty. of Pumps:

YEOMANS

Pump:

Model: 6123

Type: 9100
Synch speed: 1200 rpm

Speed: 1160 rpm
Dia: 11.125 in

Curve ID No.: 40214

Impeller ID No.: Y-4677

Specific Speeds:

Ns: ---
Nss: ---

Dimensions:

Suction: --- in
Discharge: 6 in

Pump Limits:

Temperature: 104 °F
Pressure: 150 psi g
Sphere size: 3 in

Power: --- hp
Eye area: --- in²

Search Criteria:

Flow: 1033 US gpm

Head: 31.5 ft

Fluid:

Water
Density: 62.37 lb/ft³
Viscosity: 1.105 cP

Temperature: 60 °F
Vapor pressure: 0.2563 psi a
Atm pressure: 14.7 psi a

NPSHa: --- ft

Motor:

Standard: YCC
Enclosure: TENV

Size: 15 hp
Speed: 1200
Frame: 250

Sizing criteria: Max Power on Design Curve

---- Data Point ----	
Flow:	1033 US gpm
Head:	32.5 ft
Eff:	71.3%
Power:	11.9 hp
NPSHr:	--- ft
---- Design Curve ----	
Shutoff head:	56.6 ft
Shutoff dP:	24.5 psi
Min flow:	--- US gpm
BEP:	71.9% @ 957 US gpm
NOL power:	13.2 hp @ 1421 US gpm
-- Max Curve --	
Max power:	17.6 hp @ 1734 US gpm

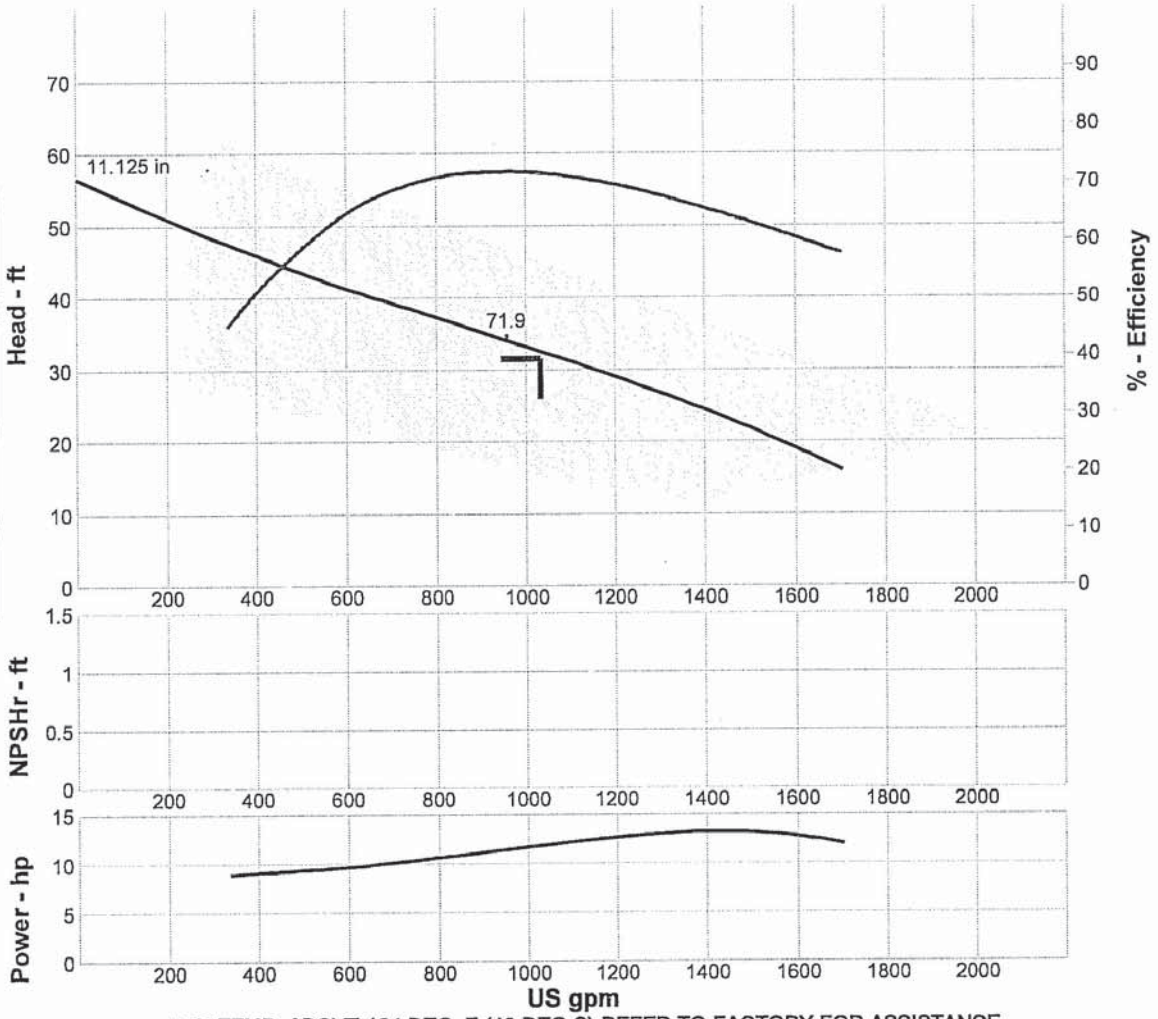

FOR TEMP. ABOVE 104 DEG. F (40 DEG C) REFER TO FACTORY FOR ASSISTANCE.

Performance Evaluation:

Flow US gpm	Speed rpm	Head ft	Efficiency %	Power hp	NPSHr ft
1240	1160	28.1	68.7	12.7	---
1033	1160	32.5	71.3	11.9	---
826	1160	36.8	70.7	10.8	---
620	1160	40.9	65.5	9.78	---
413	1160	45.7	52	9.16	---

PRODUCT INFORMATION

(BARE PUMP)

FREE STANDING* MODELS 3062 THRU 14206

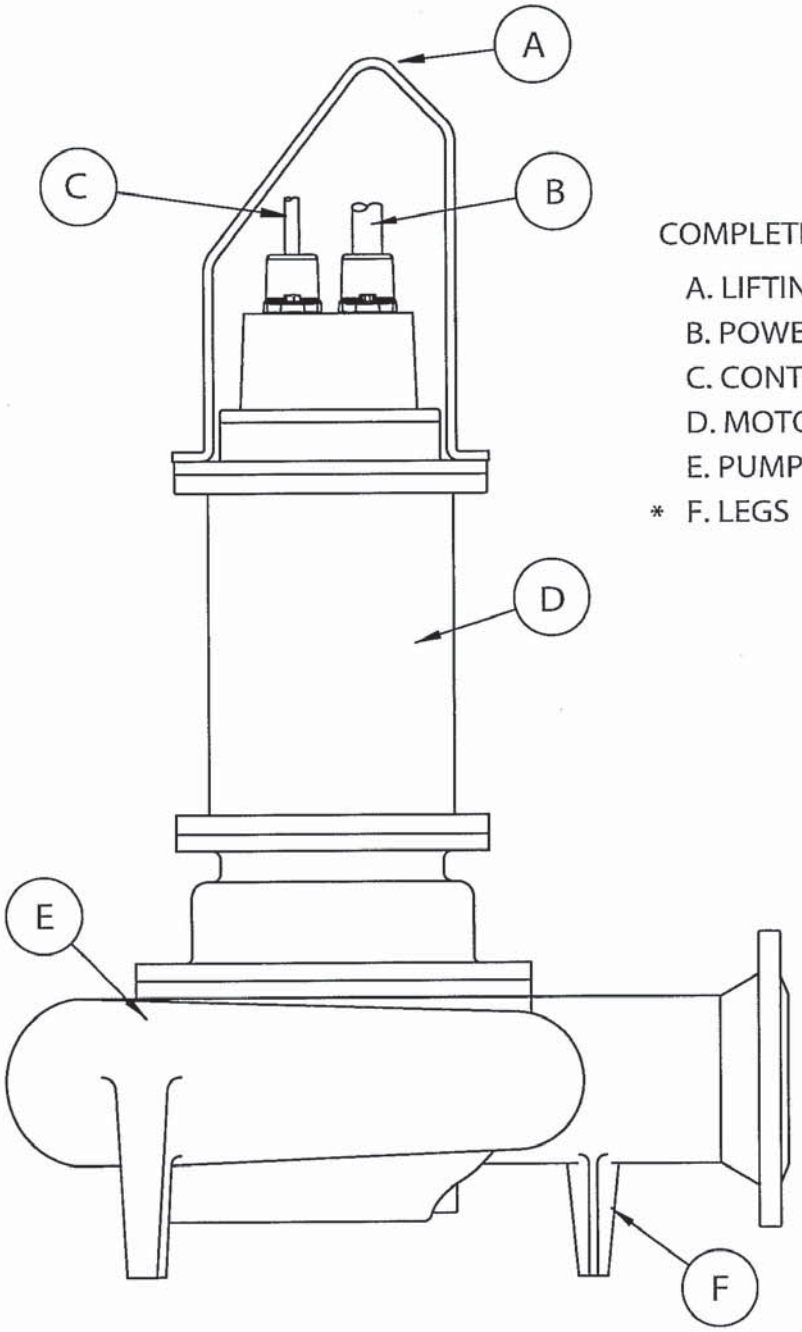

COMPLETE PUMP INCLUDES:

A. LIFTING BAIL
B. POWER CABLE
C. CONTROL CABLE
D. MOTOR
E. PUMP ASSEMBLY
* F. LEGS

* NOTE: MODELS 4072, 4083, 4153L, 6154L & 8175 DO NOT HAVE ANTI-VORTEXING LEGS AND ARE NOT FREE-STANDING. FOR PORTABLE USE, THESE MODELS REQUIRE OPTIONAL SUPPORT PEDESTAL AND DISCHARGE ADAPTER FITTING. REFER TO FACTORY FOR ADDITIONAL INFORMATION.

SOLIDS-HANDLING SUBMERSIBLE WASTEWATER PUMP
MODELS 3062 THRU 14206

MOTOR FRAME 140

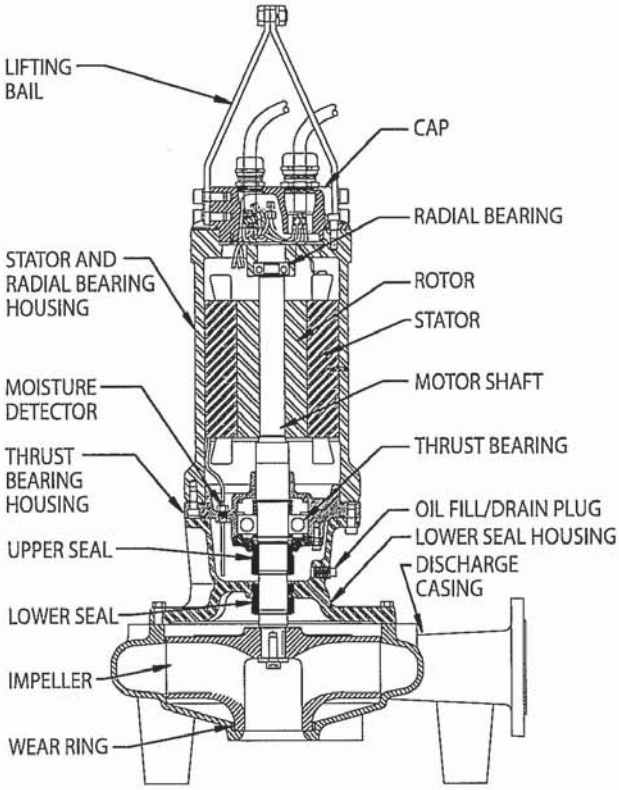

MOTOR FRAMES 180 THRU 360

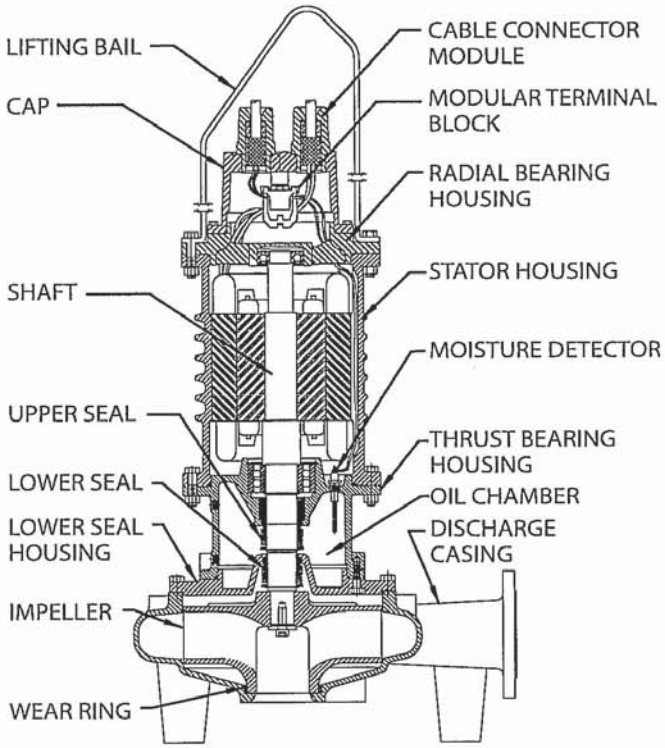

TYPICAL CONSTRUCTION

ITEM	STANDARD CONSTRUCTION	OPTIONAL
LIFTING BAIL	STEEL	STAINLESS STEEL
CAP	CAST IRON	
CABLE CONNECTOR MODULE	CAST IRON w/ NEOPRENE GROMMET & EPOXY SEAL	
RADIAL BEARING HOUSING	CAST IRON	
STATOR HOUSING	CAST IRON	
SHAFT	STAINLESS STEEL	
UPPER SEAL	CARBON / SILICON CARBIDE	
LOWER SEAL	SILICON CARBIDE / SILICON CARBIDE	
THRUST BEARING HOUSING	CAST IRON	
LOWER SEAL HOUSING	CAST IRON	
DISCHARGE CASING	CAST IRON	
IMPELLER	CAST IRON	BRONZE
WEAR RING - SUCTION	POLYURETHANE (4072–6123 except 4153)	STAINLESS STEEL
WEAR RING - IMPELLER	NONE	STAINLESS STEEL (Except models 4072 and 41035V–4133SV)

PRODUCT INFORMATION

MODELS 3062 THRU 4123 (1)
INCLUDES 4103SV THRU 4133SV
EXCLUDES MODELS 4072 & 4083 (2)

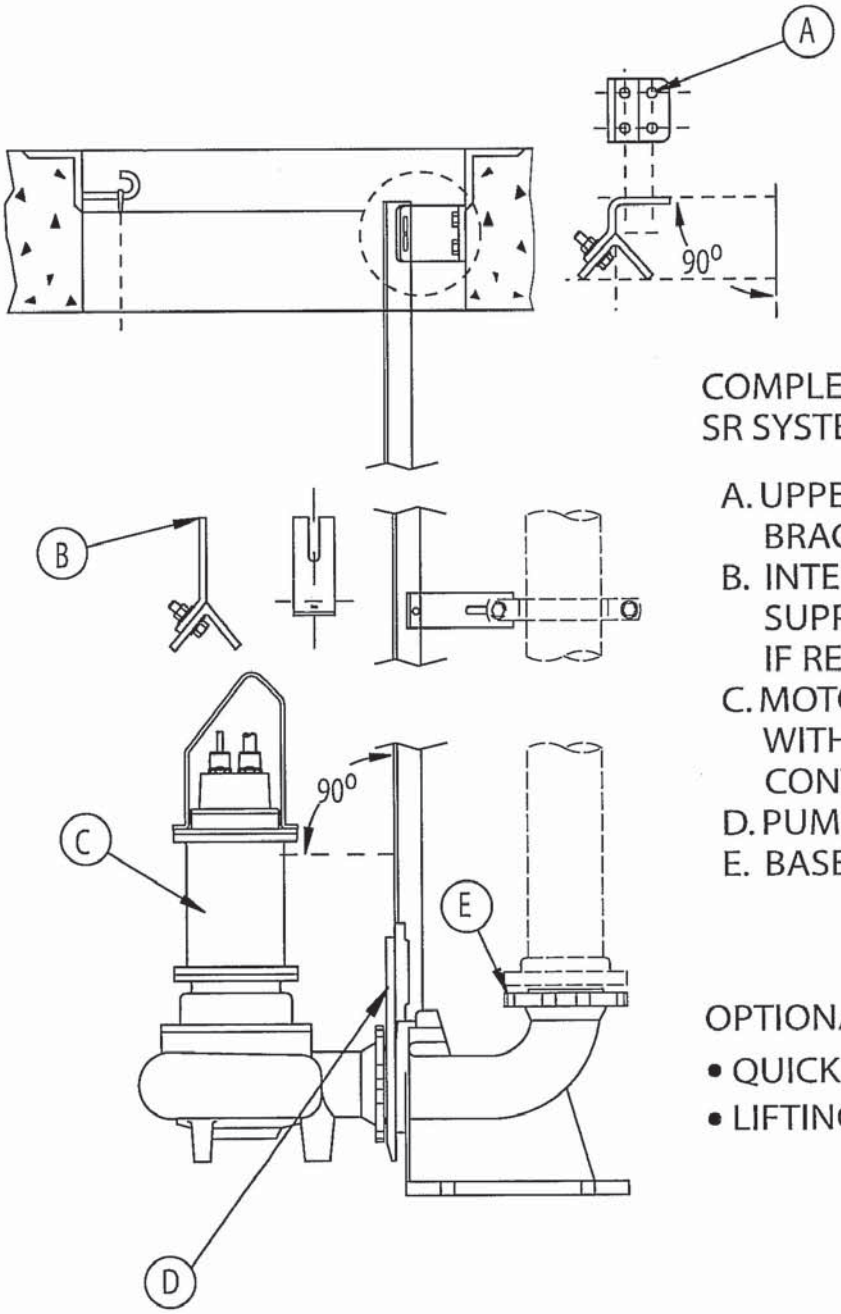

COMPLETE PUMP WITH
SR SYSTEM INCLUDES:

A. UPPER GUIDE RAIL SUPPORT BRACKET
B. INTERMEDIATE GUIDE RAIL SUPPORT BRACKET(S) IF REQUIRED
C. MOTOR & PUMP ASSEMBLY WITH POWER AND CONTROL CABLES
D. PUMP SLIDE CLAMP
E. BASE ELBOW

OPTIONAL:

- QUICK LIFT GUIDE RAIL
- LIFTING CHAIN OR CABLE

NOTES:
(1) THE SINGLE RAIL ("SR") SYSTEM IS AVAILABLE FOR PUMPS WITH MOTOR FRAME SIZE 140 ~ 210 ONLY. FOR LARGER SIZES, USE "EL" DUAL RAIL SYSTEM
(2) FOR MODELS 4072 & 4083, USE "EL" DUAL RAIL SYSTEM

SOLIDS-HANDLING SUBMERSIBLE WASTEWATER PUMP WITH SINGLE RAIL SYSTEM

MODELS 3062 THRU 4123; INCLUDES 4103SV THRU 4133SV
MOTOR FRAMES 140 THRU 210
EXCLUDES MODELS 4072 & 4083

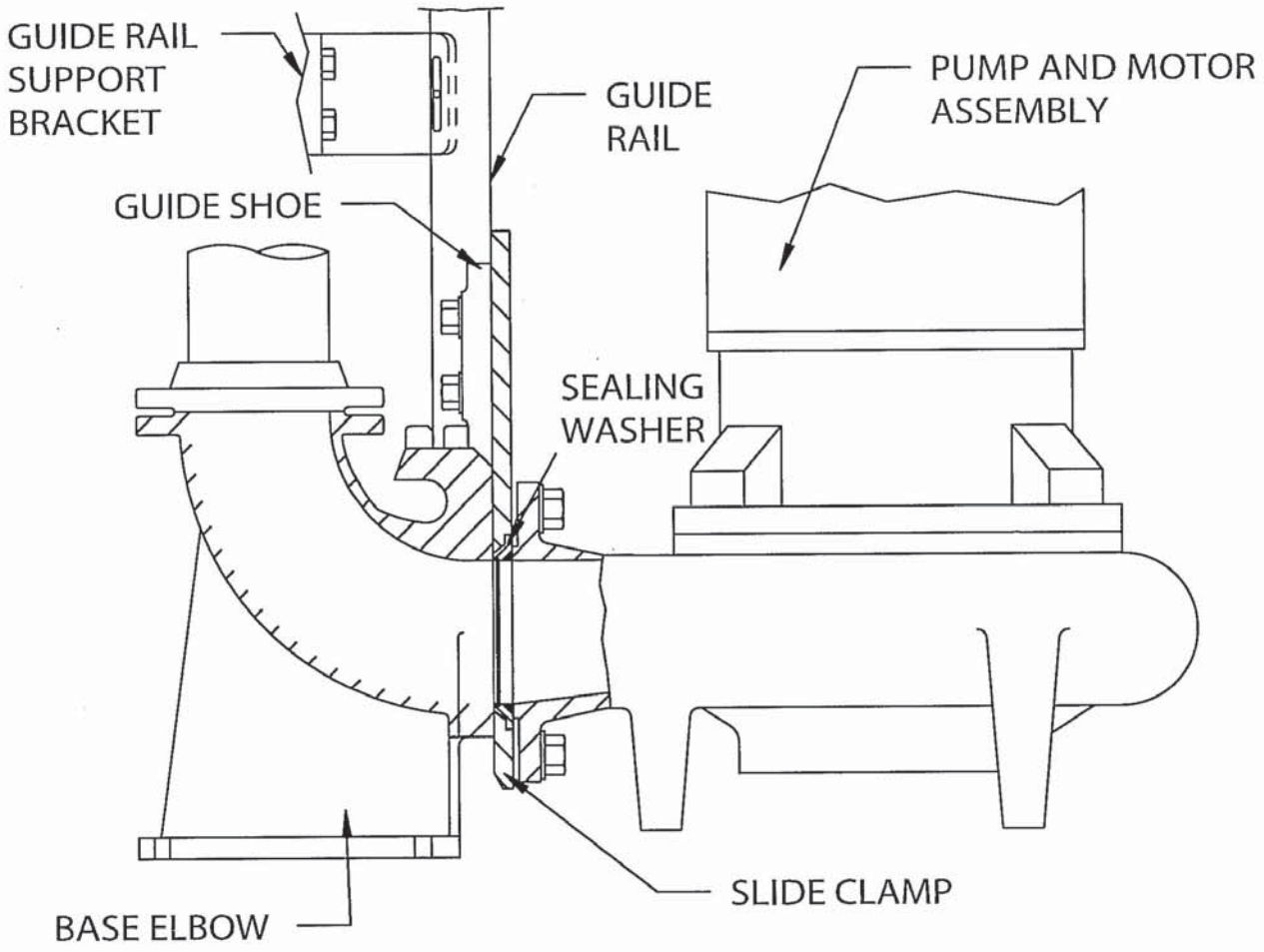

TYPICAL CONSTRUCTION

ITEM	STANDARD CONSTRUCTION	OPTIONAL
PUMP & MOTOR ASSEMBLY	CAST IRON	BRONZE IMPELLER
GUIDE SHOE	CAST IRON	
GUIDE RAIL	GALVANIZED STEEL	STAINLESS STEEL
STATIONARY BASE ELBOW	CAST IRON	
SLIDE CLAMP	DUCTILE IRON	
SEALING WASHER	NEOPRENE	
GUIDE RAIL SUPPORT BRKT.	STAINLESS STEEL	

PRODUCT INFORMATION

MODELS 4072 THRU 14206

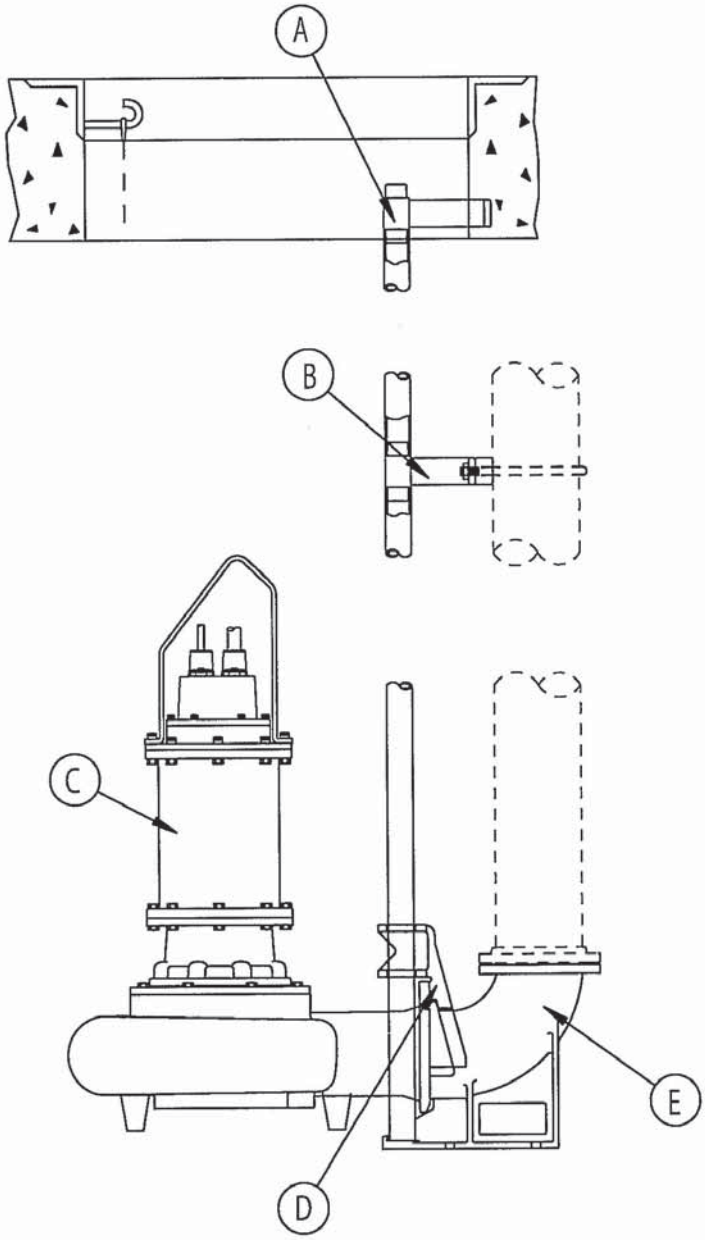

COMPLETE PUMP WITH EL DUAL RAIL SYSTEM INCLUDES:

A. UPPER GUIDE RAIL SUPPORT BRACKET

B. INTERMEDIATE GUIDE RAIL SUPPORT BRACKET(S) IF REQUIRED

C. MOTOR & PUMP ASSEMBLY WITH POWER AND CONTROL CABLE

D. PUMP DUAL RAIL SLIDE CLAMP

E. BASE ELBOW

OPTIONAL:

- DUAL GUIDE RAILS
- LIFTING CHAIN OR CABLE

SOLIDS-HANDLING SUBMERSIBLE WASTEWATER PUMP WITH E L DUAL RAIL SYSTEM

PUMP MODELS 4072 THRU 14206

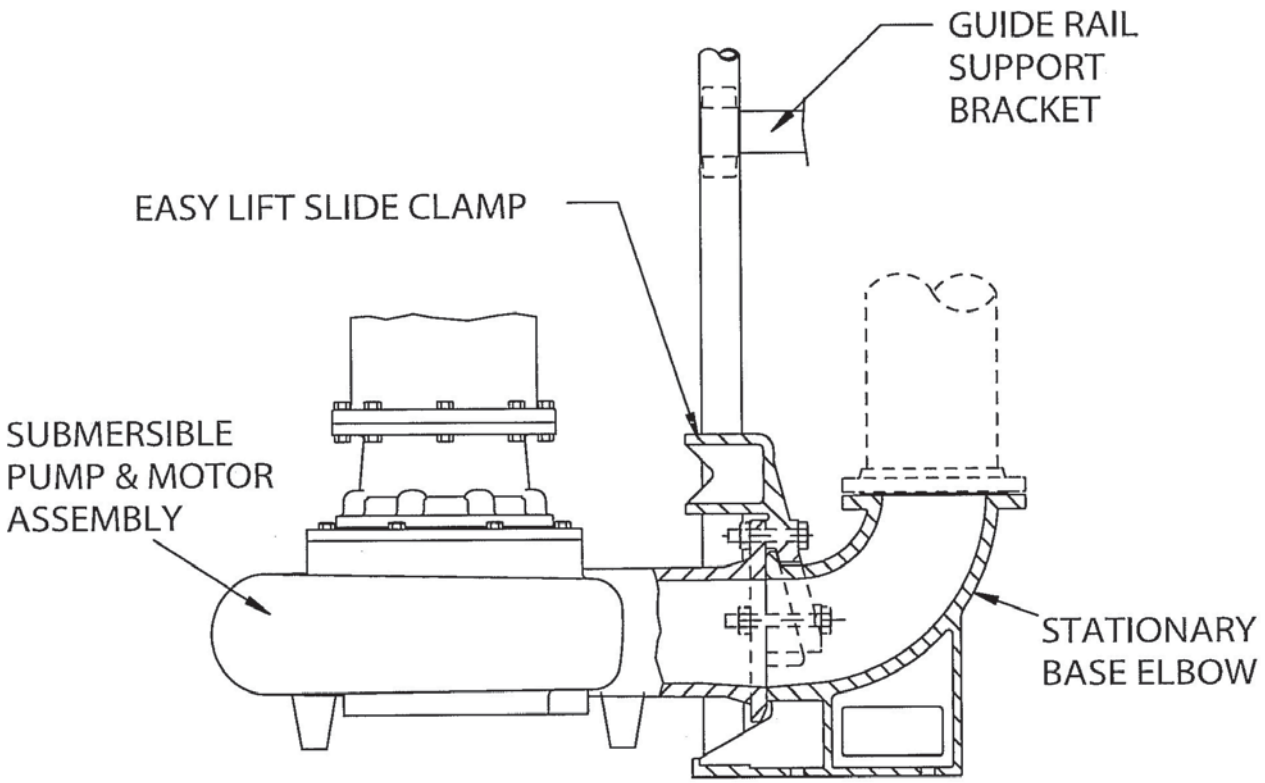

TYPICAL CONSTRUCTION

ITEM	STANDARD CONSTRUCTION	OPTIONAL
PUMP & MOTOR ASSEMBLY	CAST IRON	
EASY- LIFT SLIDE CLAMP	CAST IRON	BRONZE NON-SPARKING
STATIONARY BASE ELBOW	CAST IRON	
GUIDERAIL SUPPORT BRACKET	STAINLESS STEEL	

Totally enclosed, non-ventilated, hermetically sealed submersible type. Features include 416 stainless steel shaft, tandem mechanical seals (one inside an oil chamber and one outside); automatic reset N.C. series connected thermal overload protection, two moisture sensing probes, pre-lubricated shaft bearings class H insulation (Class F on 140 frame). *Efficiencies include all mechanical losses including mechanical seals.

H.P.	Full Load RPM	Frame Size	Nominal Eff % @ *			Nominal Power Factor % @			Amps @ 460V		KVA Code Letter	Full Load Torque (Ft-Lbs)	% Full Load Torque		Power Cable		Control Cable	
			Full Load	3/4 Load	1/2 Load	Full Load	3/4 Load	1/2 Load	Full Load	Locked Rotor			Locked Rotor	Break-down	AWG Size	O.D. ** (in.)	AWG Size	O.D. ** (in.)
0.5	1174	140	57.1	50.6	41.0	41	36	30	2	10.3	S	2.25	528	630	#16	0.57	Not Applicable - Single Cable Used	
0.75	1163	140	65.0	59.6	50.6	51	44	36	2.2	10.3	M	3.38	352	420	#16	0.57		
1	1151	140	69.1	65.0	57.1	59	51	41	2.4	10.3	K	4.50	264	315	#16	0.57		
1.5	1153	140	72.2	68.6	61.3	58	50	40	3.4	14.9	J	6.75	254	312	#12	0.65	#18	0.45
2	1159	140	74.6	71.0	63.7	55	46	36	4.7	21.8	K	9.00	279	345	#12	0.65	#18	0.45
3	1153	140	77.8	75.3	69.3	59	50	39	6.2	27.9	J	13.50	240	300	#12	0.65	#18	0.45
5	1147	180	79.5	81.2	80.0	67.0	58.0	45.4	8.8	35.2	G	22.9	161	228	*See Power Cable Size Chart*		#14	0.59
7.5	1133	180	79.8	81.9	81.2	73.3	64.6	50.9	12.0	51.1	F	34.8	149	224			#14	0.59
10	1156	210	84.0	85.8	85.4	70.7	63.3	51.0	15.8	75.3	G	45.4	212	237			#14	0.59
→ 15	1158	250	85.8	87.5	87.2	77.6	71.1	58.9	21.1	89.1	E	68.0	150	210			#14	0.59
20	1164	250	87.2	89.0	89.0	80.8	75.8	65.0	26.6	124.6	E	90.3	160	220			#14	0.59
25	1162	250	87.7	89.6	89.8	80.8	76.1	65.8	33.0	152.8	E	113.0	162	217			#14	0.59
30	1173	320	87.3	87.8	86.3	81.5	77.4	68.2	39.5	211.0	G	134.3	171	231			#14	0.59
40	1175	320	88.7	89.6	88.7	83.9	80.9	73.2	50.3	293.7	G	178.8	186	238			#14	0.59
50	1175	320	89.5	90.6	90.2	85.2	82.8	76.3	61.0	410.3	H	223.2	217	243			#14	0.59
60	1176	320	89.3	90.0	89.2	79.5	74.3	63.7	79.2	489.1	H	267.9	216	263			#14	0.59
75	1178	360	90.7	91.2	90.3	83.8	79.9	70.9	92.0	570.0	G	334.5	146	291			#14	0.59
100	1173	360	90.6	91.7	91.3	84.8	81.7	73.7	122.0	681.0	F	447.6	133	260			#14	0.59
125	1175	360	91.2	92.3	92.1	85.0	81.8	73.6	151.0	913.0	G	558.8	147	280			#14	0.59
150	1175	L360	92.9	94.4	95.1	86.0	83.4	76.2	175.7	1059.0	G	670.7	146	275			#14	0.59

Typical motor data for Submersible 3 phase, 60 hertz, NEMA design B, 40 °C ambient, normal torque motors. Amperes shown for 460 volt connection. If other connections are available, the amperes will vary inversely with rated voltage. All values nominal. All motors have 1.15 S.F. at 40 °C ambient temperature.
** Above cable data for standard motors only, with cable length of 30'. Data is applicable through lengths of 100'. 140 frame motors with #16 AWG cord utilize single cable, (8) conductor, with power and control leads.
Control cables must be run in a separate conduit. Not certified for construction. Cable size and dimensions may vary. Confirm with factory before final design or construction.

Appendix C
Grit Removal System Data Sheets and Drawings

DRAFT

EQUIPMENT DATA SHEET

PROJECT INFORMATION

Project: Guadalupe WWTP Improvement Project **Job No.:** 6576
Prepared By: Michael Hill **Date:** 9/1/2010
Revised By: _____ **Date:** _____ **Rev. No.:** _____
Revised By: _____ **Date:** _____ **Rev. No.:** _____
Revised By: _____ **Date:** _____ **Rev. No.:** _____

PRELIMINARY DESIGN INFORMATION

Equipment Name: Grit Removal System (includes propeller drive, pump, classifier, and concentrator)
Specification Section: 11400 **Title :** Grit Removal Systems
Equipment Location: Grit Chamber
Equip. Type: Grit Equipment **Equip. Service:** Wastewater and Grit
Equip. Dimensions: _____
Equip. Weight: _____
Materials of Construction: 304 Stainless Steel and Hard Nickel Iron (Pump)

Equip No.	Equipment Capacity	Motor/ Load (HP)	Standby Power	Motor Speed (RPM)	Equip Speed (RPM)	Maintenance	
						Type	Freq.
GR-201	4.4 mgd	3/4	☐ Yes ☐ No	54	21		
GR-202	250 gpm	N/A	☐ Yes ☐ No	N/A	N/A		
GR-203	50 gpm	1	☐ Yes ☐ No		9		
P-201	250 gpm	10	☐ Yes ☐ No	1,200	1,170		
			☐ Yes ☐ No				

No. of future additional units: _____

COMMENTS: Proposal does not include cost of installation

DESIGN DEVELOPMENT INFORMATION

GENERAL

	Manufacturer A	Manufacturer B	Manufacturer C	Manufacturer D
Specified MFGR	Smith & Loveless			
Model	Pista			
Est. Cost/unit	$140,000			
Expected Lift				
Delivery Time				

(Catalog cut sheets and standard specification of specified manufacturers enclosed)

MECHANICAL

Inlet Pressure: _____ **Outlet Pressure:** _____

Inlet Diameter: _____ **Outlet Diameter:** _____

SUPPORT UTILITIES

Water: ☒ None ☐ Potable ☐ Non-potable ☐ Utility

Capacity: ___ gpm, ___ psi

Drainage: ☐ None ☒ Hub Drain ☐ Floor Drain ☐ Floor Sink ☒ Size __6"_

Air: ☐ Utility ☐ Instrument ☐ None ☐ None ☐ None

Capacity: _____gpm, _____ psi

Lube Oil: ☐ None ☐ Lubricator

Hydraulic: ☐ None ☐ Power Pack

HVAC

Heat Loss: _____BTU/hr **Combustion Air:** _____scfm

EQUIPMENT INSTALLATION REQUIREMENTS

Equipment Mounting ☒ Base Plate ☐ Skid Frame ☒ Support Legs ☐ Guiderail

Structural Support ☐ Equip Pad ☐ Equip Base ☐ Isolation Base

☐ Piers ☐ Wall Brackets Height ____ft

Lifting Requirements ☐ None ☐ Lifting Eyes ☐ Monorail ☐ Davit Crane

Service Platforms ☐ Yes ☐ No

☐ Equip Supported ☐ Yes ☐ No ☐ Partial

ELECTRICAL

Motor Type ☐ Horizontal ☐ Induction ☒ Contstant Speed

☐ Vertical (Chamber) ☐ Synchronous ☐ Two Speed

☒ Totally Enclosed ☐ Wound Rotor ☐ Reversing (classifier)

☐ Submersible ☐ Variable Speed

Motor Duty ☒ Continuous ☒ Intermittent

Environment ☐ Indoor ☒ Outdoor

☐ Damp ☒ Wet ☒ Corrosive ☐ Hazardous

Variable Speed ☐ Adjustable Frequency

☐ DC – SCR

(If Applicable) ☐ Eddy Current

☐ Hydrostatice

☐ Other _____

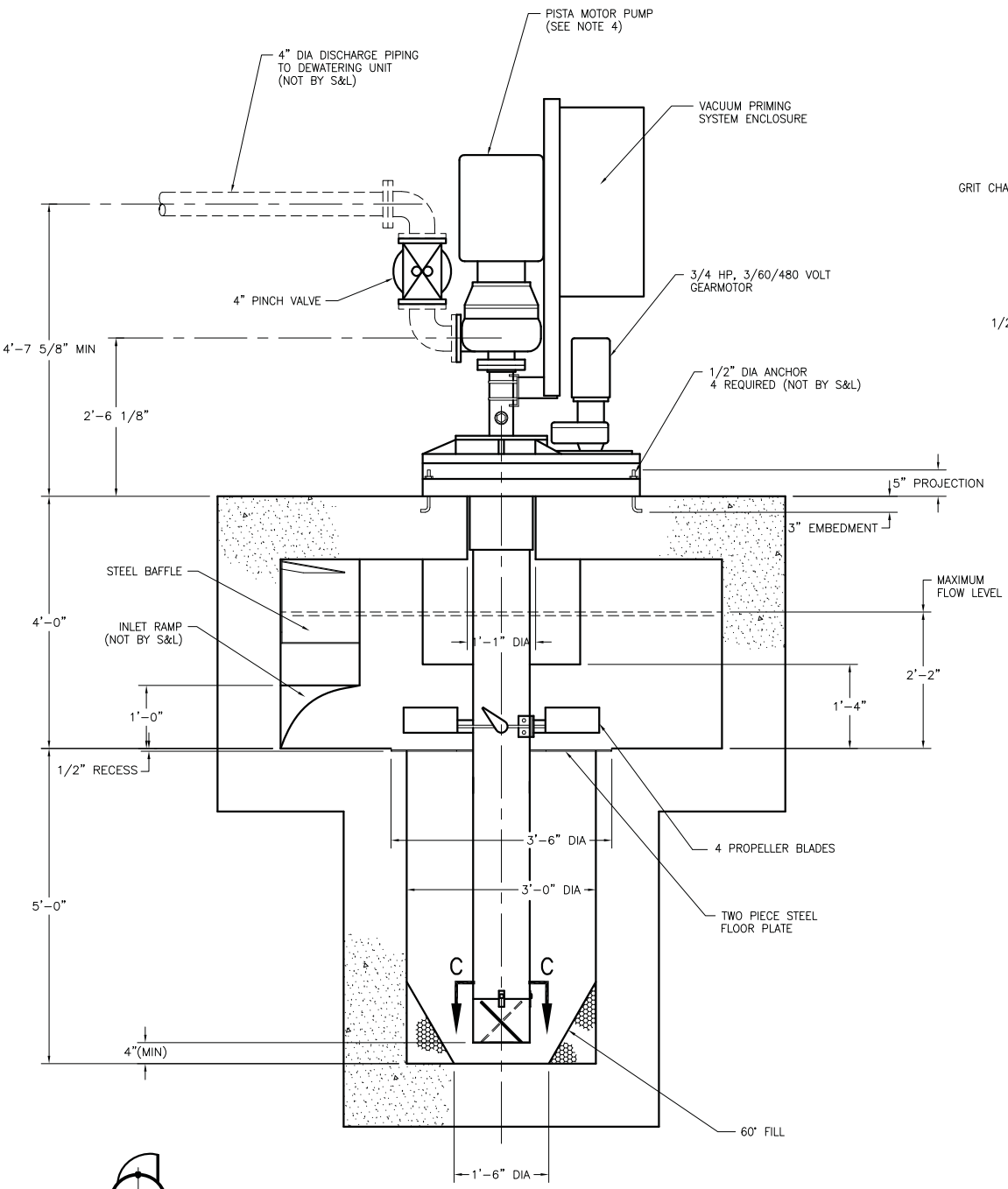

SECTIONAL ELEVATION

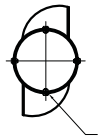

(4) 5/8" DIA
BOLTED CONNECTION

VIEW C–C

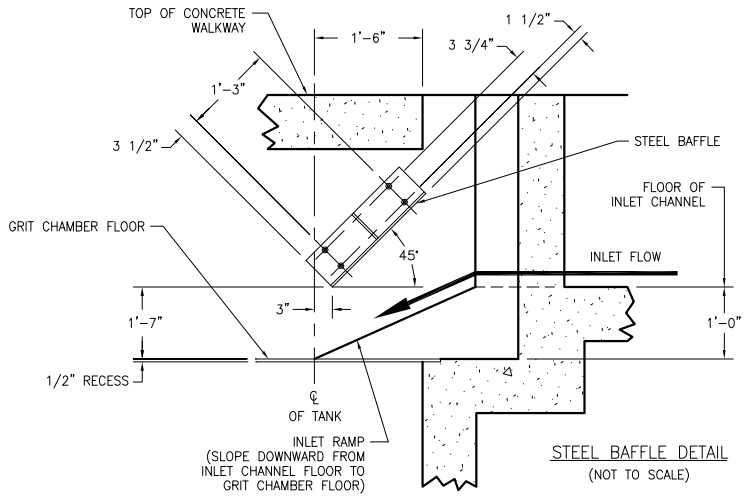

STEEL BAFFLE DETAIL

(NOT TO SCALE)

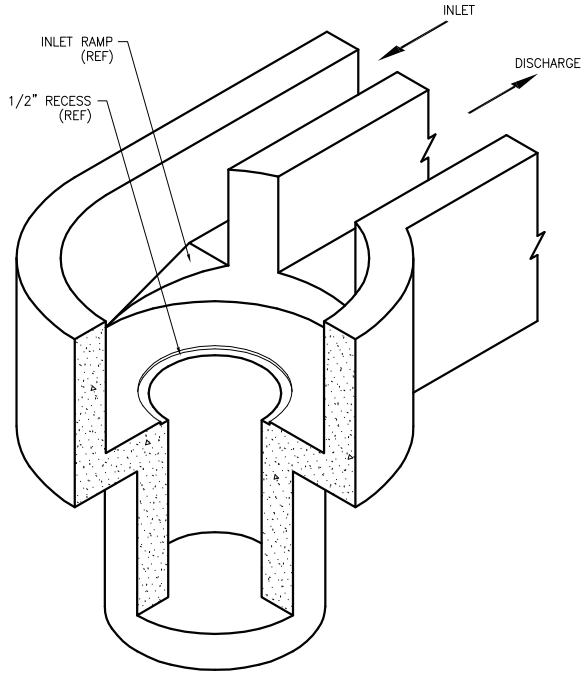

ISOMETRIC VIEW

(CHAMBER SHOWN WITHOUT WALKWAY)

SHEET 2 OF 2

LET	ECN NO	DATE	BY APPV'D
ORIGINAL ISSUE			

DRAWN BY: BMJ	DATE: 7/27/2010	ALLOWABLE TOLERANCES
CHECKED BY: ACM	DATE: 7/27/2010	FRACTIONS –
APPROVED BY: McCULLOUGH	DATE: 7/27/2010	DECIMALS –
SCALE: NTS	CODE:	ANGLES –

FOR GUADALUPE, CA

PISTA GRIT REMOVAL SYSTEM TOP MOUNTED TURBO PUMP WITH CONCRETE TANK CCW MODEL 4.0

SIZE | U/M EA | WT.

FILE NAME 16077–03–001 | PLOT SCALE 1=16

© Smith & Loveless, Inc. 2010

SERIAL NO INQ16077 | DWG NO **16077–03–001** | REV

RECIPIENT AGREES THE INFORMATION ON THIS DRAWING AND THE EQUIPMENT DEPICTED HEREIN IS CONFIDENTIAL, PROPRIETARY AND PROTECTED UNDER UNITED STATES AND FOREIGN INTELLECTUAL PROPERTY LAWS AND IS OWNED BY SMITH & LOVELESS, INC. UNLESS SPECIFIC WRITTEN CONSENT IS GIVEN BY SMITH & LOVELESS, INC., YOU MAY NOT COPY, REPRODUCE, TRANSMIT, DISPLAY, DISTRIBUTE, ALTER, OR OTHERWISE USE IN WHOLE OR IN PART ANY INFORMATION ON THIS DRAWING OR THE EQUIPMENT DEPICTED HEREIN, OR PERMIT SUCH ACTIONS TO BE TAKEN BY A THIRD PARTY. SMITH & LOVELESS, INC. TRANSFERS NO RIGHTS IN THIS DRAWING OR THE INFORMATION AND EQUIPMENT DEPICTED HEREIN.

DIMENSIONS ARE IN INCHES UNLESS OTHERWISE NOTED.

Smith & Loveless, Inc.

Table 4
PISTA® GRIT CHAMBER DESIGN DATA – CONCRETE TANK - 270° UNITS

Model	0.5	1.0	2.5	4.0	7.0	12.0	20.0	30.0	50.0	70.0
Maximum Flow (MGD)	0.5	1.0	2.5	4.0	7.0	12.0	20.0	30.0	50.0	70.0
Chamber Diameter	6' – 0"		7' – 0"	8' – 0"	*10' – 0"	12' – 0"	16' – 0"	18' – 0"	20' – 0"	24'– 0"
Chamber Depth	3' – 8"		3' – 8"	4' – 0"	4' – 9"	5' – 0"	5' – 6"	6' – 6"	7' – 0"	7' – 0"
Grit Hopper Diameter	3' – 0"		3' – 0"	3' – 0"	5' – 0"	5' – 0"	5' – 0"	5' – 0"	5' – 0"	6' – 0"
Grit Hopper Depth	5' – 0"		5' – 0"	5' – 0"	5' – 6"	6' – 8"	6' – 10"	7' – 0"	8' – 0"	8' – 0"
Drive: HP	¾		¾	¾	1	1	2	2	2	2
Input RPM	54		54	54	37	37	36	36	36	36
Output RPM	20		20	20	14	14	13	13	13	13
Estimated Shipping Wt. (Lbs.)	2000		2000	2000	2500	2500	3000	3000	3000	3000
Add for Steel Shell	2300		2600	3300	4800	N/A	N/A	N/A	N/A	N/A

*9' – 10 ¼" in Steel

Now that you have selected the **PISTA®** Grit Chamber model you require, you can determine the grit storage volume in the **PISTA®** Grit Chamber.

Table 5
PISTA® GRIT CHAMBER
GRIT HOPPER STORAGE VOLUME*

MODEL	CUBIC FEET
0.5, 0.5A	32
1.0, 1.0A	32
2.5, 2.5A	32
4.0, 4.0A	32
7.0A	35
7.0	76
12.0, 12.0A	100
20.0, 20.0A	102
30.0, 30.0A	106
50.0, 50.0A	125
70.0, 70.0A	164
100.0A	335

*Volumes seen above are based on the hopper dimensions listed in Tables 1 through 4, and utilizing a 60^0 sloped bottom in the **PISTA®** Grit Chamber's grit hopper.

© SMITH & LOVELESS, INC., 1998-2002

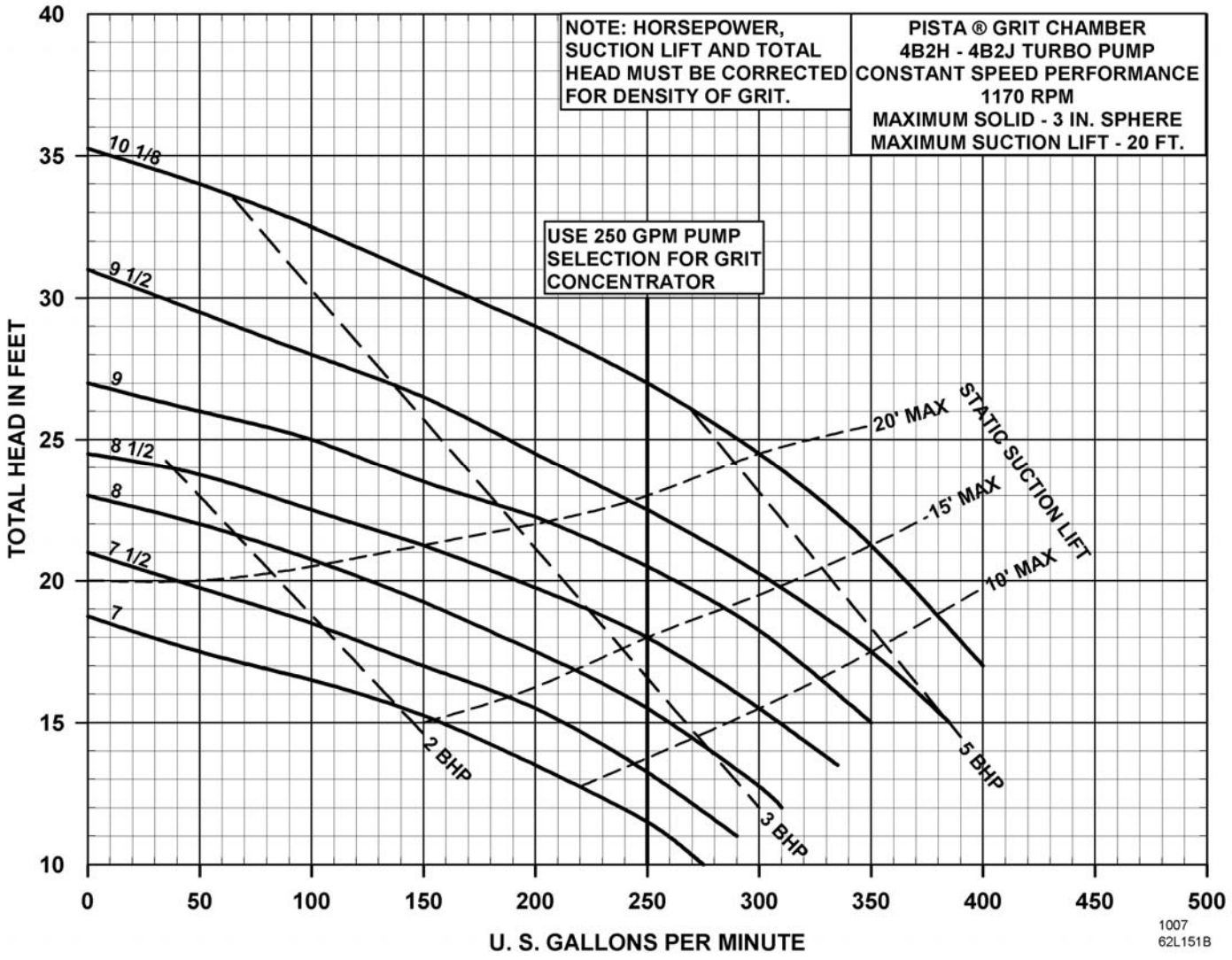

© SMITH & LOVELESS, INC., 2007

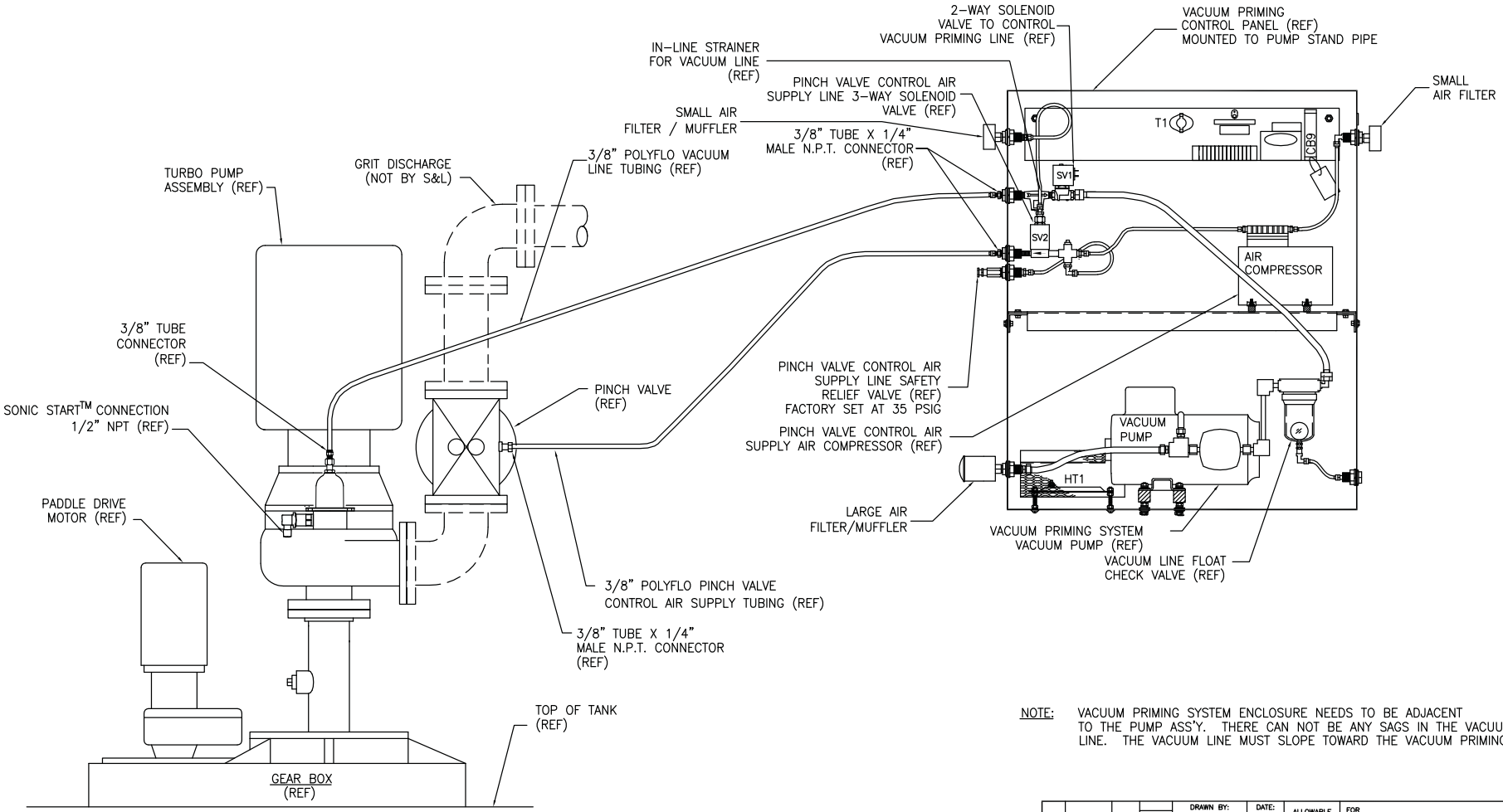

NOTE: VACUUM PRIMING SYSTEM ENCLOSURE NEEDS TO BE ADJACENT TO THE PUMP ASS'Y. THERE CAN NOT BE ANY SAGS IN THE VACUUM LINE. THE VACUUM LINE MUST SLOPE TOWARD THE VACUUM PRIMING HOUSING.

67B276

LET	ECN NO	DATE	BY APPV'D			
				DRAWN BY: JRB	DATE: 6/2004	ALLOWABLE TOLERANCES
				CHECKED BY: RJK	DATE: 6/2004	FRACTIONS –
				APPROVED BY: RGD	DATE: 6/2004	DECIMALS –
				SCALE: NTS	CODE:	ANGLES –

FOR: 4" TURBO PUMP VACUUM PRIMING SYSTEM PIPING ASSEMBLY

SIZE | U/M EA | WT.

FILE NAME /SUB/67B276_ | PLOT SCALE 1=12.000

ORIGINAL ISSUE N2004-29

© Smith & Loveless, Inc. 2004

SERIAL NO | DWG NO 67B276 | REV

THE DESIGN AND DETAIL OF THIS DRAWING IS THE PROPERTY OF SMITH & LOVELESS, INC. AND IS NOT TO BE USED EXCEPT IN CONNECTION WITH OUR WORK. DESIGN AND INVENTION RIGHTS ARE RESERVED. DIMENSIONS ARE IN INCHES UNLESS OTHERWISE NOTED.

Smith & Loveless, Inc.

SHEET 1 OF 1

ENGINEERING DATA

Smith &
Loveless, Inc.®

14040 West Santa Fe Trail Drive
Lenexa, Kansas 66215-1284

PISTA® Grit Screw Conveyor
Model 15 & **PISTA®** 250 GPM
Grit Concentrator
Arrangement Drawing 67C176
November, 2007

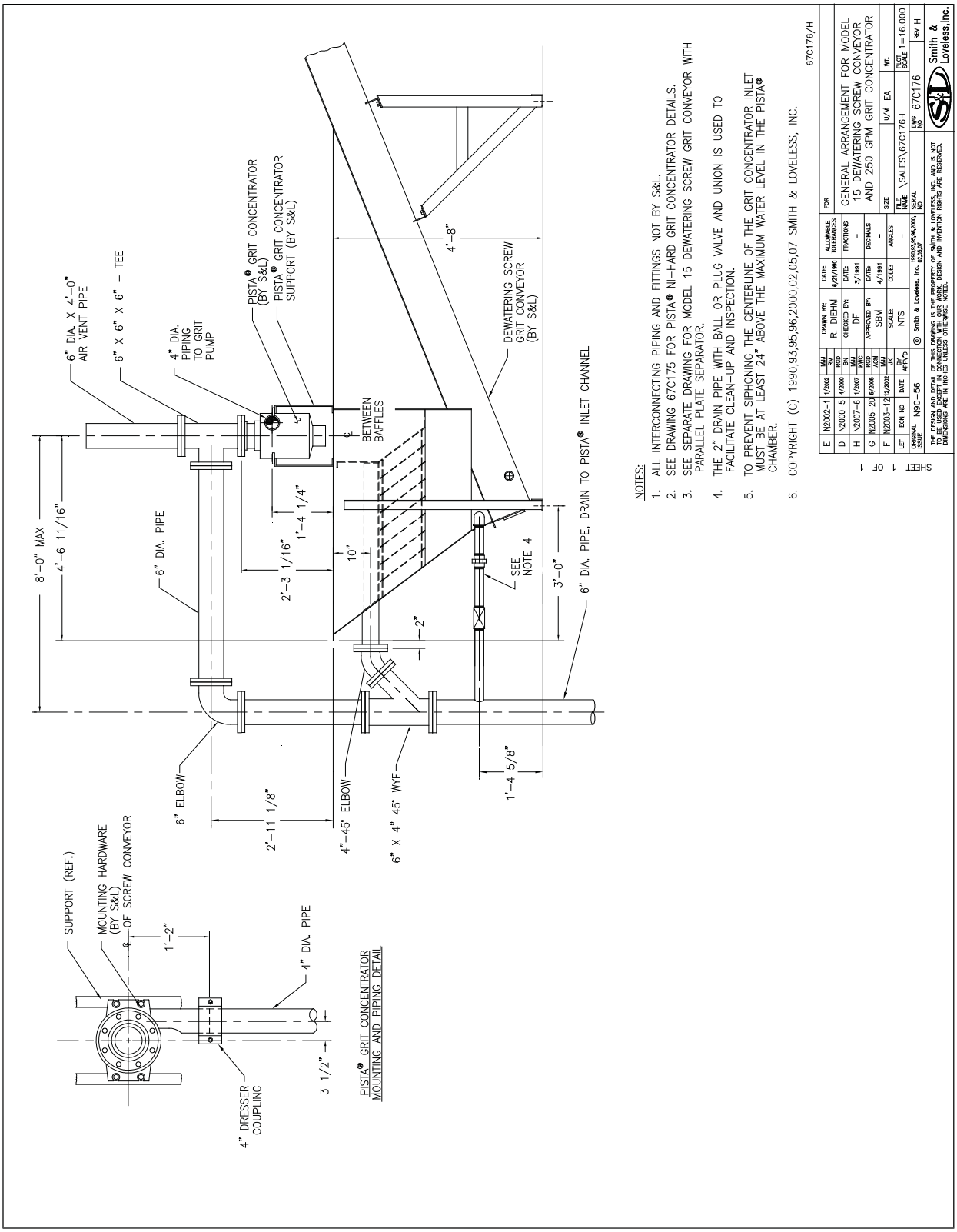

© SMITH & LOVELESS, INC., 2007

PISTA® GRIT REMOVAL SYSTEM

Appendix D
Biological Treatment System Data Sheet and Calculations

DRAFT

EQUIPMENT DATA SHEET

PROJECT INFORMATION

Project: Guadalupe WWTP Improvement Project **Job No.:** 6576
Prepared By: Michael Hill **Date:** 9/1/2010
Revised By: _____ **Date:** _____ **Rev. No.:** _____
Revised By: _____ **Date:** _____ **Rev. No.:** _____
Revised By: _____ **Date:** _____ **Rev. No.:** _____

PRELIMINARY DESIGN INFORMATION

Equipment Name: Aeration Diffusers and floating air delivery pipes
Specification Section: 11460 **Title :** Biological Treatment System
Equipment Location: Biological Treatment System
Equip. Type: Biological Treatment Equipment **Equip. Service:** Air
Equip. Dimensions:
Equip. Weight:
Materials of Construction: soft urethane (diffusers) and polyethylene (floating delivery pipes)

Equip No.	Equipment Capacity	Motor/ Load (HP)	Standby Power	Motor Speed (RPM)	Equip Speed (RPM)	Maintenance	
						Type	Freq.
BIO-301	2,658 scfm	N/A	☐ Yes ☐ No	N/A	N/A		
			☐ Yes ☐ No				
			☐ Yes ☐ No				
			☐ Yes ☐ No				
			☐ Yes ☐ No				

No. of future additional units: _____

COMMENTS: Proposal does not include cost of installation

DESIGN DEVELOPMENT INFORMATION

GENERAL

	Manufacturer A	Manufacturer B	Manufacturer C	Manufacturer D
Specified MFGR	Parkson			
Model	Biolac-R			
Est. Cost/unit	$586,000 (total Biolac-R package)			
Expected Lift				
Delivery Time				

(Catalog cut sheets and standard specification of specified manufacturers enclosed)

MECHANICAL

Inlet Pressure: _____ **Outlet Pressure:** _____

Inlet Diameter: _____ **Outlet Diameter:** _____

SUPPORT UTILITIES

Water: ☒ None ☐ Potable ☐ Non-potable ☐ Utility

Capacity: ___ gpm, ___ psi

Drainage: ☒ None ☐ Hub Drain ☐ Floor Drain ☐ Floor Sink ☐ Size _____

Air: ☐ Utility ☐ Instrument ☐ None ☐ None ☐ None

Capacity: _2120 icfm, 15_ psi

Lube Oil: ☐ None ☐ Lubricator

Hydraulic: ☐ None ☐ Power Pack

HVAC

Heat Loss: _____BTU/hr **Combustion Air:** _____scfm

EQUIPMENT INSTALLATION REQUIREMENTS

Equipment Mounting ☐ Base Plate ☐ Skid Frame ☐ Support Legs ☐ Guiderail

Structural Support ☐ Equip Pad ☐ Equip Base ☐ Isolation Base

☐ Piers ☐ Wall Brackets Height ____ft

Lifting Requirements ☐ None ☐ Lifting Eyes ☐ Monorail ☐ Davit Crane

Service Platforms ☐ Yes ☒ No

☐ Equip Supported ☐ Yes ☐ No ☐ Partial

ELECTRICAL

Motor Type ☐ Horizontal ☐ Induction ☐ Contstant Speed

☐ Vertical (Chamber) ☐ Synchronous ☐ Two Speed

☐ Totally Enclosed ☐ Wound Rotor ☐ Reversing (classifier)

☐ Submersible ☐ Variable Speed

Motor Duty ☒ Continuous ☐ Intermittent

Environment ☐ Indoor ☒ Outdoor

☐ Damp ☒ Wet ☒ Corrosive ☐ Hazardous

Variable Speed ☐ Adjustable Frequency

☐ DC – SCR

(If Applicable) ☐ Eddy Current

☐ Hydrostatice

☐ Other _____

EQUIPMENT DATA SHEET

PROJECT INFORMATION

Project: Guadalupe WWTP Improvement Project **Job No.:** 6576
Prepared By: Michael Hill **Date:** 9/1/2010
Revised By: _____ **Date:** _____ **Rev. No.:** _____
Revised By: _____ **Date:** _____ **Rev. No.:** _____
Revised By: _____ **Date:** _____ **Rev. No.:** _____

PRELIMINARY DESIGN INFORMATION

Equipment Name: Flocculating Rakes
Specification Section: 11460 **Title :** Biological Treatment System
Equipment Location: Biological Treatment System
Equip. Type: Biological Treatment Equipment **Equip. Service:** Mixed Liquor and effluent
Equip. Dimensions: _____
Equip. Weight: _____
Materials of Construction: _____

Equip No.	Equipment Capacity	Motor/ Load (HP)	Standby Power	Motor Speed (RPM)	Equip Speed (RPM)	Maintenance	
						Type	Freq.
BIO-302			☐ Yes ☐ No				
BIO-303			☐ Yes ☐ No				
			☐ Yes ☐ No				
			☐ Yes ☐ No				
			☐ Yes ☐ No				

No. of future additional units: _____

COMMENTS: Proposal does not include cost of installation

DESIGN DEVELOPMENT INFORMATION

GENERAL

	Manufacturer A	Manufacturer B	Manufacturer C	Manufacturer D
Specified MFGR	Parkson			
Model	Biolac-R			
Est. Cost/unit	$586,000 (total Biolac-R package)			
Expected Lift				
Delivery Time				

(Catalog cut sheets and standard specification of specified manufacturers enclosed)

MECHANICAL

Inlet Pressure: _____ **Outlet Pressure:** _____

Inlet Diameter: _____ **Outlet Diameter:** _____

SUPPORT UTILITIES

Water: ☒ None ☐ Potable ☐ Non-potable ☐ Utility

Capacity: ___ gpm, ___ psi

Drainage: ☒ None ☐ Hub Drain ☐ Floor Drain ☐ Floor Sink ☐ Size _____

Air: ☐ Utility ☐ Instrument ☐ None ☐ None ☐ None

Capacity: __ icfm, _ psi

Lube Oil: ☐ None ☐ Lubricator

Hydraulic: ☐ None ☐ Power Pack

HVAC

Heat Loss: _____BTU/hr **Combustion Air:** _____scfm

EQUIPMENT INSTALLATION REQUIREMENTS

Equipment Mounting ☐ Base Plate ☐ Skid Frame ☐ Support Legs ☐ Guiderail

Structural Support ☐ Equip Pad ☐ Equip Base ☐ Isolation Base

☐ Piers ☒ Wall Brackets Height ____ft

Lifting Requirements ☐ None ☐ Lifting Eyes ☐ Monorail ☐ Davit Crane

Service Platforms ☒ Yes ☐ No

☐ Equip Supported ☐ Yes ☐ No ☐ Partial

ELECTRICAL

Motor Type ☐ Horizontal ☐ Induction ☒ Contstant Speed

☐ Vertical (Chamber) ☐ Synchronous ☐ Two Speed

☐ Totally Enclosed ☐ Wound Rotor ☒ Reversing (classifier)

☐ Submersible ☐ Variable Speed

Motor Duty ☒ Continuous ☐ Intermittent

Environment ☐ Indoor ☒ Outdoor

☐ Damp ☒ Wet ☒ Corrosive ☐ Hazardous

Variable Speed ☐ Adjustable Frequency

☐ DC – SCR

(If Applicable) ☐ Eddy Current

☐ Hydrostatice

☐ Other _____

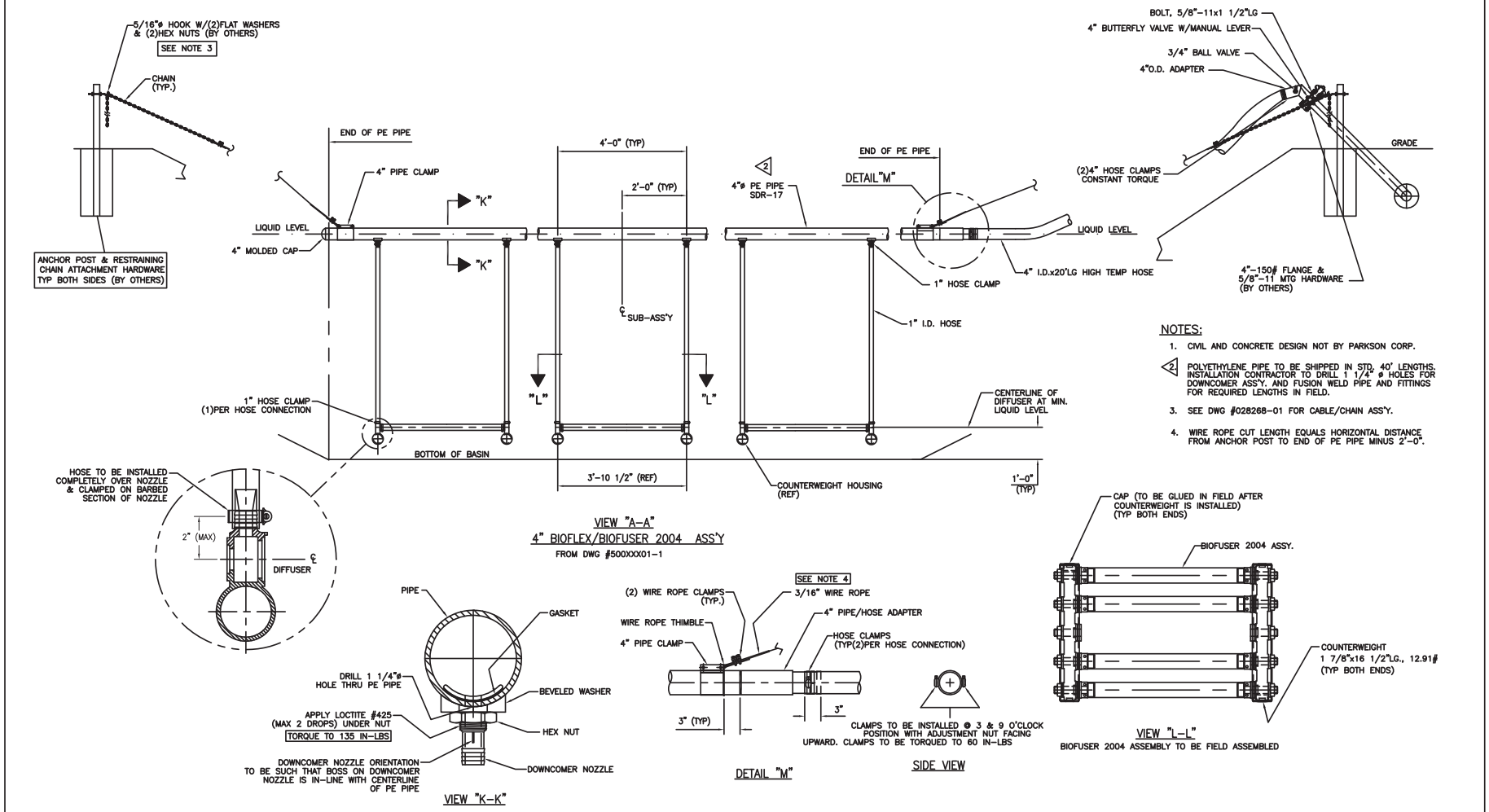

VIEW "A-A"
4" BIOFLEX/BIOFUSER 2004 ASS'Y
FROM DWG #500XXX01-1

VIEW "K-K"

DETAIL "M"

SIDE VIEW

VIEW "L-L"
BIOFUSER 2004 ASSEMBLY TO BE FIELD ASSEMBLED

NOTES:

1. CIVIL AND CONCRETE DESIGN NOT BY PARKSON CORP.
2. POLYETHYLENE PIPE TO BE SHIPPED IN STD. 40' LENGTHS. INSTALLATION CONTRACTOR TO DRILL 1 1/4" ø HOLES FOR DOWNCOMER ASS'Y. AND FUSION WELD PIPE AND FITTINGS FOR REQUIRED LENGTHS IN FIELD.
3. SEE DWG #028268-01 FOR CABLE/CHAIN ASS'Y.
4. WIRE ROPE CUT LENGTH EQUALS HORIZONTAL DISTANCE FROM ANCHOR POST TO END OF PE PIPE MINUS 2'-0".

This drawing and all appurtenant matter contains information proprietary to PARKSON CORPORATION and is loaned subject to return upon demand and must not be reproduced, copied, loaned, revealed, nor used for any purpose other than that for which it is specifically furnished without expressed written consent of PARKSON CORPORATION. The Owner, Project Engineer, and all others involved with the project design must implement and follow all safety standards required by local, state and federal laws when incorporating Parkson Corporation equipment into the overall project design. Parkson Corporation will not be responsible for location and/or placement of equipment in the plant design, nor is Parkson Corporation responsible for plant safety design and for the failure to follow appropriate safety precautions in the operation and maintenance of Parkson Corporation equipment.

REV	DESCRIPTION	DATE	BY

X PRELIMINARY ___ APPROVAL

___ INFORMATION ___ CERTIFIED

THIS DRAWING IS LIMITED TO FUNCTIONAL DESIGN, GENERAL ARRANGEMENT AND CLEARANCE. NO RESPONSIBILITY IS ACCEPTED BY PARKSON CORPORATION FOR OTHER DIMENSIONS, QUANTITIES, OR COORDINATION WITH OTHER EQUIPMENT OR DRAWINGS EXCEPT AS STATED IN PURCHASE ORDER.

DRAWN BY	DATE
MohonS	07/29/10
CHECKED BY	DATE
ChinmayV	07/29/10
SCALE	SIZE
NTS	B

Parkson

PROJECT NAME
PROJECT NUMBER 500XXX
GUADALUPE, CA

REFERENCE INFORMATION

TITLE
BIOLAC R SYSTEM
4" BIOFLEX/BIOFUSER
2004 ASSY

DRAWING NO
500XXX01-5
SHEET 5 OF 6

REV
0

BIOLAC SYSTEM

PROCESS DESIGN

DATE: 7/23/2010
PROJECT NAME: Guadalupe, CA
REPRESENTATIVE: Coombs Hopkins
ATTENTION :Matt Rebbman
CONSULTING ENGR.:Michael Hill - Dudek
REP PHONE NUMBER:760/931-0555

PLANT TYPE	
R	YES
L	NO
W	NO
A	NO
TOTAL Q =	1
# BASINS=	1

DESIGN DATA:		AVERAGE		PEAK	
DESIGN FLOW/BASIN:		1.00	MGD	2	MGD.
DESIGN LOAD:	BOD	300	mg/l		
	TSS	300	mg/l		
	TKN	50	mg/l		
	NH3	35	mg/l		
	NO3	0	mg/l		
	ALKA.	410	mg/l		
	PH	8			
	P	0	mg/l		
POUNDS PER DAY:	BOD	2502	lbs/d		
	TSS	2502	lbs/d		
	TKN	417	lbs/d		
	NH3	292	lbs/d		
	NO3	0	lbs/d		
	ALKA.	3419	lbs/d		
	P	0	lbs/d		
				Required by consultant or spec:	
EFFLUENT CRITERIA:	BOD	60	mg/l	60	mg/l
	TSS	60	mg/l	60	mg/l
	NH3	1	mg/l	0	mg/l
	TIN	1	mg/l	0	mg/l
	NO3	0	mg/l	0	mg/l
	DO	2	mg/l	0	mg/l
	P	0	mg/l	0	mg/l
EFFLUENT REQUIRED:	BOD	80	%		
	TSS	80	%		
	NH3	97	%		
	TKN	98	%		
	NO3	0	%		
	P	0	%		

CONDITIONS:	**MAX.AMB.TEMP**	= 30	C
	MIN. AMB. TEMP.	= 0	C
	MAX.W.W. TEMP.	= 20	C
	MIN.W.W. TEMP.	= 10	C
	SITE BAR.PRES.	= 14.67	psi
	PLANT ELEVATION	= 65	ft above sea level
	02 SATURATION	= 9.09	mg/l
	AT MAX WW TEMP		

SELECT PARAMETERS:	LBS OF O2/LB OF BOD REMOVED =		1.5
	LBS 02 /LB TKN-N PER DAY =		4.6
	ALPHA =	0.7	
	BETA =	0.95	
	THETA =	1.024	
	D.O =	2	mg/l
	HRT =	1.57	DAYS
	F/M =	0.06	
	MLSS =	3189	mg/l
ESTIMATE % VOLATILE= 70	**SRT =**	69	DAYS

BASIN ONE (B-1) DESIGN:

SELECT:	**SIDE WATER DEPTH MINIMUM**	= 11	ft
SELECT:	**SIDE WALL SLOPE (horiz./vert.)**	= 2	TO 1
SELECT:	**GRADE HEIGHT ABOVE S.W.D.**	= 3	ft
SELECT:	**BASIN SHAPE (LENGTH / WIDTH)**	= 1.28	TO 1
	# of side walls sloped at G73(0,1,	2	
	# of end walls sloped at G73 (0,1,	1	

BASIN (B-1) VOLUME :

DESIGN B. VOL. = (LBS.BOD/DAY)/(F/M)(MLSS)(8.34)=	1.57	MG
DESIGN B. VOL. = (mg./7.48)*(10^6) =	209611	ft^3
LBS BOD/THOUSAND CU FT AERATOR VOLUME =	11.94	

BOTTOM DIM:	LENGTH (see derivation @ U100)	136	ft
	WIDTH (see derivation @ U99)	106	ft
GRADE DIM:	GD LENGTH=BD LEN.+(2*SLOPE(SWD+GH)	164	ft
	GD WIDTH=BD WIDTH+(2*SLOPE(SWD+GH)	162	ft
HRT:	HRT(AV.)=BAS.VOL.(MG)/AV.FLOW(MGD)	1.57	days
	HRT(PEK)=BAS.VOL(MG)/PEK.FLOW(MGD)	0.78	days

SELECT CLARIFIER CRITERIA INTERNAL:	**YES**	**TYPE=**	**IN**	IC,IN,SBC
SURFACE LOADING AT AVERAGE FLOW	=	**399**	GPD/ft^2*da
WEIR LOADING gpd/lin. ft	=	**5000**	gpd/ft
SOLIDS LOADING lbs./ft^2*d	=	**35**	#/ft^2/d.
RAS FLOW/ AIR LIFT BASED ON 150%Q	=	521	GPM
AIR LIFT DIAMETER	=	10	INCHES
CLARIFIER WIDTH ADJUSTMENT	=	0.25	FT
CLARIFIER FLAT SECT AT ENTRANCE	=	**2.25**	FT
ASSUME THE MINIMUM CLARIF SWD	=	**11**	FT

INTERNAL CLARIFIER SIZING PROCEDURE: SELECT WEIR TYPE, FIXE **YES**

THEREFORE CLARIFIER WIDTH AT WATER SURFACE	**22.8**	ft
CLARIFIER HOPPER DEPTH BASED ON LAYOUT =	**6**	ft

THE SURFACE AREA CAN BE CALCULATED BY THE FOLLOWING :

SURFACE AREA =(AVG flow (mgd)(10^6)/ (1)	2506	ft^2
WEIR LENGTH =(aver.flow (mgd)*10^6) / (2)	200	ft
SA(sl) = [aver. flow (mgd)*mlss*8.34/ (3)	1950	ft^2

CLARIFIER LENGTH = SURFACE AREA /CLAR.WIDT	**110**	ft.lg.
CLARIFIER LOADING = AVER.FLOW/SURF.AREA =	399	GPD/ft^2

BASIN 1 BOTTOM DIMENSONS **136** X **106**

TOTAL # OF CLARIFIERS CALCULATED = **2.00** #SELECTED= **2**

LAND REQUIREMENT FOR THE BIOLAC SYSTEM

BASIN [1] DIM. AT GRADE	=	26565	ft^2
WASTE SLUDGE BASIN DIM. AT GRADE	=	31283	ft^2
TOTAL AREA	=	57848	ft^2
ACRES	=	1.33	

THE BIOLAC SYSTEM OXYGEN REQUIREMENTS

Guadalupe, CA

Basin Data FOR BASIN ONE

BASIN CAPACITY * NUMBER OF BASINS = TOTAL BASIN CAPACITY
209611 * 1 = 209611

TOTAL BASIN CAPACITY * 7.48 = MILLION GALLON BASIN CAPACITY (MGBC)
209611 * 7.48/1000000 = 1.57

Oxygen Requirements for the Biolac Aeration System

ACTUAL OXYGEN REQUIREMENTS (AOR)

M G D * BOD (mg./l.) * 8.34 LBS./(mg./l.) = TOTAL LBS. BOD/DAY
1 300 * 8.34 = 2502

1.5 LBS. O2/LB. OF BOD REMOVED

38 HOURS RETENTION TIME

96 % REMOVAL OF BOD

LBS. BOD REMOVED/DAY * LBS.O2/LB. BOD REMOVED= AOR FOR BOD REMOVAL
2402 * 1.5 = 3603

M G D * TKN(mg./l.) * 8.34 = TOTAL LBS. TKN / DAY
1 50 * 8.34 = 417

4.6 LBS.O2/LB. OF TKN REMOVED (STANDARD)

98 % REMOVAL OF TKN

LBS. TKN REMOVED/DAY * LBS. O2/LB. TKN REMOVED = AOR FOR TKN REMOVAL
409 * 4.6 = 1880

COMBINED AOR = **5483** /24 HRS. = **228** LBS. O2/HR. AOR

THE ACTUAL OXYGEN REQUIREMENT MUST BE CONVERTED TO A STANDARD OXYGEN REQUIREMENT. THIS CONVERSION TAKES INTO CONSIDERATION SUCH FACTORS TEMPERATURE, ELEVATION, DIFFUSER DEPTH, ALPHA FACTOR, BETA FACTOR, A DISSOLVED OXYGEN LEVEL DESIRED.

TEMPERATURE=(T)	20
SATURATION=(CSM)	9.092
SITE BAROMETRIC PRESSURE=(BP)	14.666
DIFFUSER WATER DEPTH=(DWD)	10
EQUIVILENT DEPTH FACTOR=(F)	0.25
ALPHA=(A)	0.7
BETA=(B)	0.95
THETA=(O)	1.024
DISSOLVED OXYGEN LEVEL=(C-L)	2

C-ST = CSM * (BP+(.433*DWD* F)) / 14.7 = 9.741

C-S20= 9.092 *((14.7+(.433*DWD* F)) / 14= 9.7615

C-SW = BETA * C-ST = 9.2539

$$SOR = \frac{\text{LBS.O2/HR. AOR} \quad 228}{\text{ALPHA*(C-SW - C-L / C-S20) * (THETA^T - 20)}} = 439$$

SOR = 439

AERATION SYSTEM DESIGN

AIR RATE PER FT OF DIFFUSER AS DETERMINED : **1.31** **SCFM**

SOR = 439

DIFFUSER 02 TRANSFER RATE **0.2346**

SCFM REQ =(SOR/FT OF DIFF O2 TRANS RATE*AIR FLOW RATE/FT DI

SCFM = **2458** FOR DESIGN OXYGEN REQ

SCFM = **2658** INCLUDING RAS AIRLIFT PUMP

DELTA P=(((swd - 1)/34)*14.7)+1.5 **5.82**

AIR LIFT AIR FLOW **200** AIR LIFT BHP= **8**

BHP.= (SCFM*0.3775)((ATM.P+DEL.P/ATM.P)^.283-1)

BHP. = **92** FOR DESIGN OXYGEN REQ

BHP. = **100** INCLUDING CLARIFIER AIRLIFT

MIN SCFM FOR MIXING BASED ON SIDE SLOPE = 4 /1000 FT3

MIN SCFM = BASIN VOLUME 1000 FT3 * 4.0 **838** SCFM

MIN BHP FOR MIXING = **31**

TOTAL FT OF DIFFUSERS SUGGESTED AT TARGET FLOW RATE 1872

TOTAL FT OF DIFFUSERS BASED ON ACTUAL FINAL LAYOUT 1872

TUBES PER BIOFUSER ASSEM = **4** TOTAL BIOFUSERS = **117**

SERIES BIOFUSER SELECTED = **2000** FT/DIFF ASSEMBLY= **4**

NUMBER OF BIOFLEX CHAINS ON PROJECT = **9**

NUMBER OF BIOFUSER ASSEMBLIES PER BIOFLEX CHAIN = **13**

NOTE AIR FLOW TARGET = 50 fps VELOCITY

AIR FLOW PER CHAIN (SCFM) = **273**

FEED DIAMETER = **4** VELOCITY AT CONDITION = **44**

CHAIN SPACING = **15.11** BIOFUSER ASSEM SPACING = **8.15**

NOTES:

1. CIVIL AND CONCRETE DESIGN NOT BY PARKSON.
2. MATERIALS OF CONSTRUCTION:
   WEIR TROUGH, WEIR PLATE AND SCUM BAFFLE – FRP
   TROUGH SUPPORT – TYPE 304 STAINLESS STEEL
3. SCUM BAFFLE AND V–NOTCH WEIR PLATES WILL BE SHIPPED IN TWO (2) PIECES. CONTRACTOR TO FIELD ASSEMBLE.

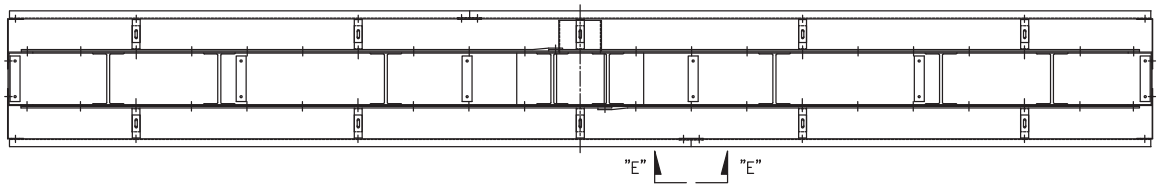

TOP VIEW
(TROUGH SUPPORTS OMITTED FOR CLARITY)

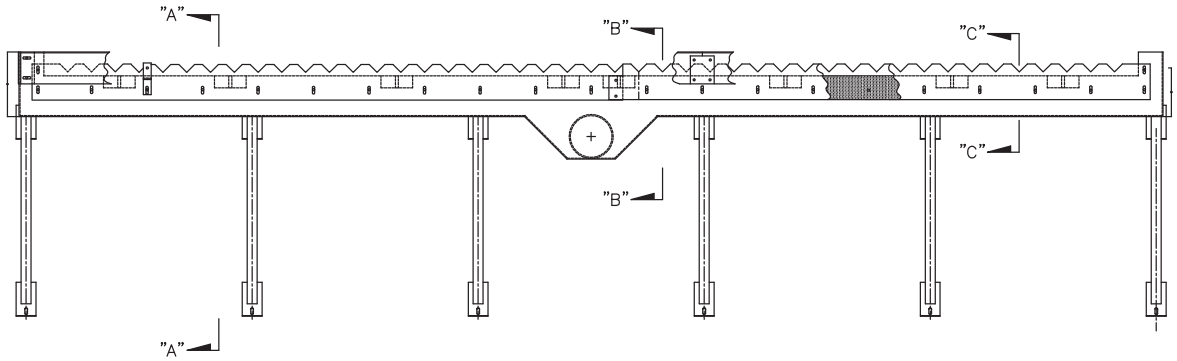

FRONT VIEW
(PARTIAL SCUM BAFFLE SHOWN)

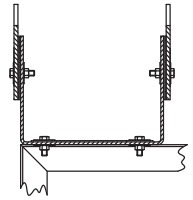

SECTION "C"–"C"
(TROUGH)

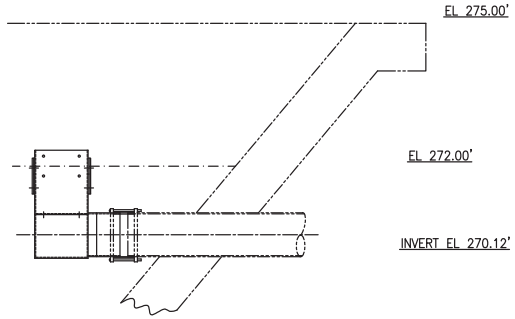

VIEW "B"–"B"
(SCUM BAFFLE OMITTED FOR CLARITY OF WEIR TROUGH)

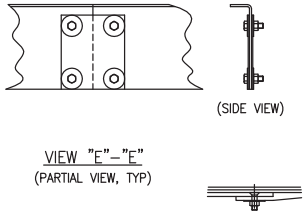

(SIDE VIEW)

VIEW "E"–"E"
(PARTIAL VIEW, TYP)

DETAIL "D"
(WEIR SPLICE, TYP)

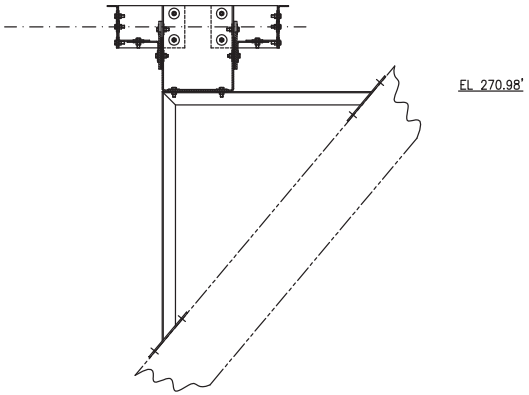

SECTION "A"–"A"
(TROUGH SUPPORT)

This drawing and all appurtenant matter contains information proprietary to PARKSON CORPORATION and is loaned subject to return upon demand and must not be reproduced, copied, loaned, revealed, nor used for any purpose other than that for which it is specifically furnished without expressed written consent of PARKSON CORPORATION. The Owner, Project Engineer, and all others involved with the project design must implement and follow all safety standards required by local, state and federal laws when incorporating Parkson Corporation equipment into the overall project design. Parkson Corporation will not be responsible for location and/or placement of equipment in the plant design, nor is Parkson Corporation responsible for plant safety design and for the failure to follow appropriate safety precautions in the operation and maintenance of Parkson Corporation equipment.

REV	DESCRIPTION	DATE	BY

__PRELIMINARY X APPROVAL
__INFORMATION __CERTIFIED

THIS DRAWING IS LIMITED TO FUNCTIONAL DESIGN, GENERAL ARRANGEMENT AND CLEARANCE. NO RESPONSIBILITY IS ACCEPTED BY PARKSON CORPORATION FOR OTHER DIMENSIONS, QUANTITIES, OR COORDINATION WITH OTHER EQUIPMENT OR DRAWINGS EXCEPT AS STATED IN PURCHASE ORDER.

DRAWN BY	DATE
MohanS	06/23/10
CHECKED BY	DATE
P. Gordon	06/23/10
SCALE	SIZE
3/8" = 1'	B

Parkson™

PROJECT NAME

TITLE
BIOLAC (WR) SYSTEM
WEIR AND TROUGH ASSEMBLY

REFERENCE INFORMATION
SPECIFICATION SECTION 11100

DRAWING NO
SHEET 1 OF 1

REV
0

Guadalupe, CA

WEIR & TROUGH DESIGN

n.a.

AVERAGE FLOW	0.96	MGD	
PEAK FLOW	2.88	MGD	
NUMBER OF CLARIFIERS	2		
DESIGN FLOW / CLARIFIER	1000	GPM	
NUMBER OF SIDES	2		
CLARIFIER LENGTH	55	FT	
ACTUAL LT SELECTED (TOT/CLAR)	74	FT	
ACTUAL LENGTH PER SIDE	37	FT	
MIN WEIR COVERAGE OF CLAR	37	FT	
ACTUAL LOADING @ Q AVG	6486	GPD/FT	
ACTUAL LOADING @ Q PEAK	19459	GPD/FT	

TROUGH SIZING

WIDTH = W =	18	IN	(S)
WATER LEVEL AT PEAK FLOW = Ha =	10.15	IN	
MINIMUM HEIGHT TO LIQUID LEVEL =	12.15	IN	(2" FRBRD INCLD)
SELECTED HEIGHT TO LIQUID LEVEL =	12	IN	(STD)
EFFLUENT PIPE DIAMETER =	14	IN	(S)<-- .5% SLOPE MIN
DROP BOX DEPTH =	16	IN	

V" NOTCH DESIGN

SPACING BETWEEN NOTCHES =	6	IN	(STD)
NOTCH ANGLE =	90	deg	(STD)
NUMBER OF NOTCHES PER CLARIFIER =	146	NTCHS	
NUMBER OF NOTCHES PER SIDE =	73	NTCHS	
AVG FLOW PER NOTCH =	2.28	GPM	
PEAK FLOW PER NOTCH =	6.85	GPM	
WATER DEPTH AT AVG FLOW (HEAD LC	1.00	IN	
WATER DEPTH AT PEAK FLOW (HEAD L(	1.55	IN	
SELECTED "V" NOTCH DEPTH =	2	IN	(STD)
VELOCITY THRU NOTCHES @ AVG FLOV	0.73	FT/SEC	

Appendix E
Aeration Blower Data Sheets

DRAFT

EQUIPMENT DATA SHEET

PROJECT INFORMATION

Project: Guadalupe WWTP Improvement Project **Job No.:** 6576
Prepared By: Michael Hill **Date:** 9/1/2010
Revised By: _____ **Date:** _____ **Rev. No.:** _____
Revised By: _____ **Date:** _____ **Rev. No.:** _____
Revised By: _____ **Date:** _____ **Rev. No.:** _____

PRELIMINARY DESIGN INFORMATION

Equipment Name: Aeration Blowers
Specification Section: 11460 **Title :** Biological Treatment System
Equipment Location: Biological Treatment System
Equip. Type: Biological Treatment Equipment **Equip. Service:** Air
Equip. Dimensions: _____
Equip. Weight: _____
Materials of Construction: Cast Iron

Equip No.	Equipment Capacity	Motor/ Load (HP)	Standby Power	Motor Speed (RPM)	Equip Speed (RPM)	Maintenance	
						Type	Freq.
BIO-301	2,658 scfm	N/A	☐ Yes ☐ No	1,800			
BIO-302	2,658 scfm	N/A	☐ Yes ☐ No	1,800			
BIO-303	2,658 scfm	N/A	☐ Yes ☐ No	1,800			
			☐ Yes ☐ No				
			☐ Yes ☐ No				

No. of future additional units: _____

COMMENTS: Proposal does not include cost of installation

DESIGN DEVELOPMENT INFORMATION

GENERAL

	Manufacturer A	Manufacturer B	Manufacturer C	Manufacturer D
Specified MFGR	Parkson			
Model	Biolac-R			
Est. Cost/unit	$586,000 (total Biolac-R package)			
Expected Lift				
Delivery Time				

(Catalog cut sheets and standard specification of specified manufacturers enclosed)

MECHANICAL

Inlet Pressure: _____ **Outlet Pressure:** _____

Inlet Diameter: _____ **Outlet Diameter:** _____

SUPPORT UTILITIES

Water: ☒ None ☐ Potable ☐ Non-potable ☐ Utility

Capacity: ___ gpm, ___ psi

Drainage: ☒ None ☐ Hub Drain ☐ Floor Drain ☐ Floor Sink ☐ Size _____

Air: ☐ Utility ☐ Instrument ☐ None ☐ None ☐ None

Capacity: _2120 icfm, 15_ psi

Lube Oil: ☐ None ☐ Lubricator

Hydraulic: ☐ None ☐ Power Pack

HVAC

Heat Loss: _____BTU/hr **Combustion Air:** _____scfm

EQUIPMENT INSTALLATION REQUIREMENTS

Equipment Mounting ☐ Base Plate ☐ Skid Frame ☐ Support Legs ☐ Guiderail

Structural Support ☐ Equip Pad ☐ Equip Base ☐ Isolation Base

☐ Piers ☐ Wall Brackets Height ____ft

Lifting Requirements ☐ None ☐ Lifting Eyes ☐ Monorail ☐ Davit Crane

Service Platforms ☐ Yes ☒ No

☐ Equip Supported ☐ Yes ☐ No ☐ Partial

ELECTRICAL

Motor Type ☐ Horizontal ☐ Induction ☒ Contstant Speed

☐ Vertical (Chamber) ☐ Synchronous ☐ Two Speed

☐ Totally Enclosed ☐ Wound Rotor ☐ Reversing (classifier)

☐ Submersible ☐ Variable Speed

Motor Duty ☒ Continuous ☐ Intermittent

Environment ☒ Indoor ☐ Outdoor

☐ Damp ☐ Wet ☐ Corrosive ☐ Hazardous

Variable Speed ☐ Adjustable Frequency

☐ DC – SCR

(If Applicable) ☐ Eddy Current

☐ Hydrostatice

☐ Other _____

AERZEN

Delta Blower 5 Generation

G5 BLOWER Packages

One step ahead.

Quiet

Compact

Energy Efficient

Aerzen's Generation 5 Delta Blower

The 5th generation of Aerzen modular compact packages combines tradition and innovation.

1. Easy installation with forklift or pallet jack for placement

2. Room-saving, compact, side-by-side installation

3. Easy access to all components with one oil drain/oil fill point

4. Oil level can be observed from the outside

5. Automatic belt tension - No adjustment required

6. Typical machinery noise average SPL 75-80 dB(A) with acoustic hood

7. No need for additional electric motor and interlocks with shaft-mounted cooling fan for forced ventilation of the enclosure

8. "Aerzen 10 Combi-Mount" Discharge Silencer eliminates the need for absorption material inside the silencer.

Aerzen Delta G5 Blower Stage

The details that set Aerzen Blowers apart.

Active Noise Cancellation Built In

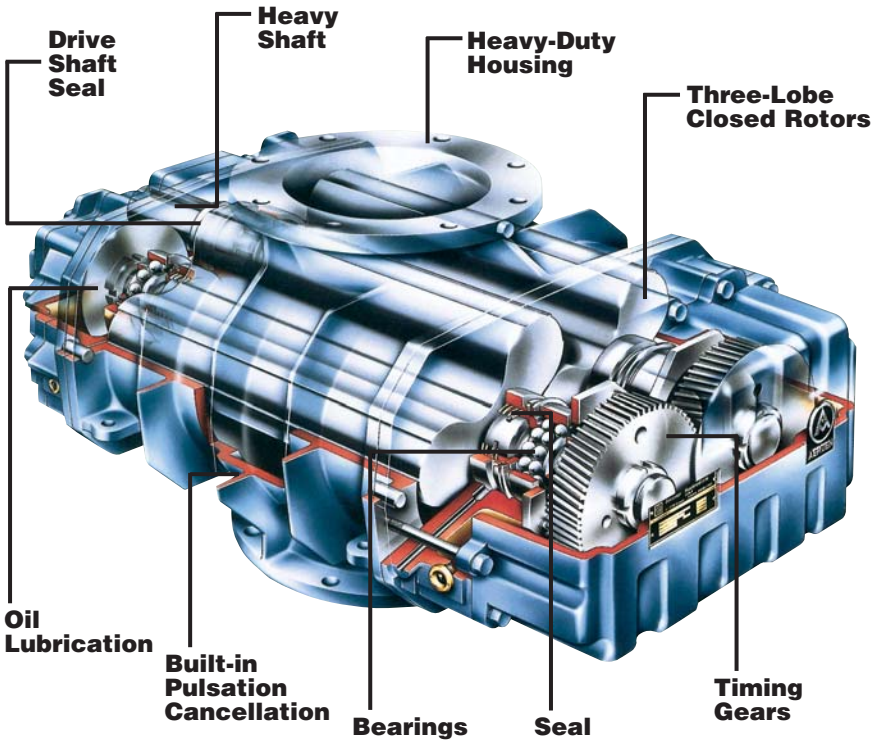

For more information, visit **www.aerzenusa.com**

The accessories that make the difference.

Inlet Filter/Silencer
Washable filter element. Easily removable internal parts. The filter element is downstream of the silencer for cleanliness.

Pressure Safety Valve
Spring-loaded. Specifically designed for low pressure applications. Mounted vertically downstream of the silencer for longevity.
(hidden in photo)

Instrumentation
Standard filter maintenance indicator and p2 gauge

Aeromat Start-Up Unloading Valve (Optional)
Allows startup of the main motor with no load. The valve is completely self activating and does not need any auxiliary electrical or pneumatic power source.

Belt Guard
Designed for easy access to the drive. OSHA standard.

Discharge Manifold
With integral full bore check valve for low pressure drop. The check valve can be inspected without disconnecting the piping.

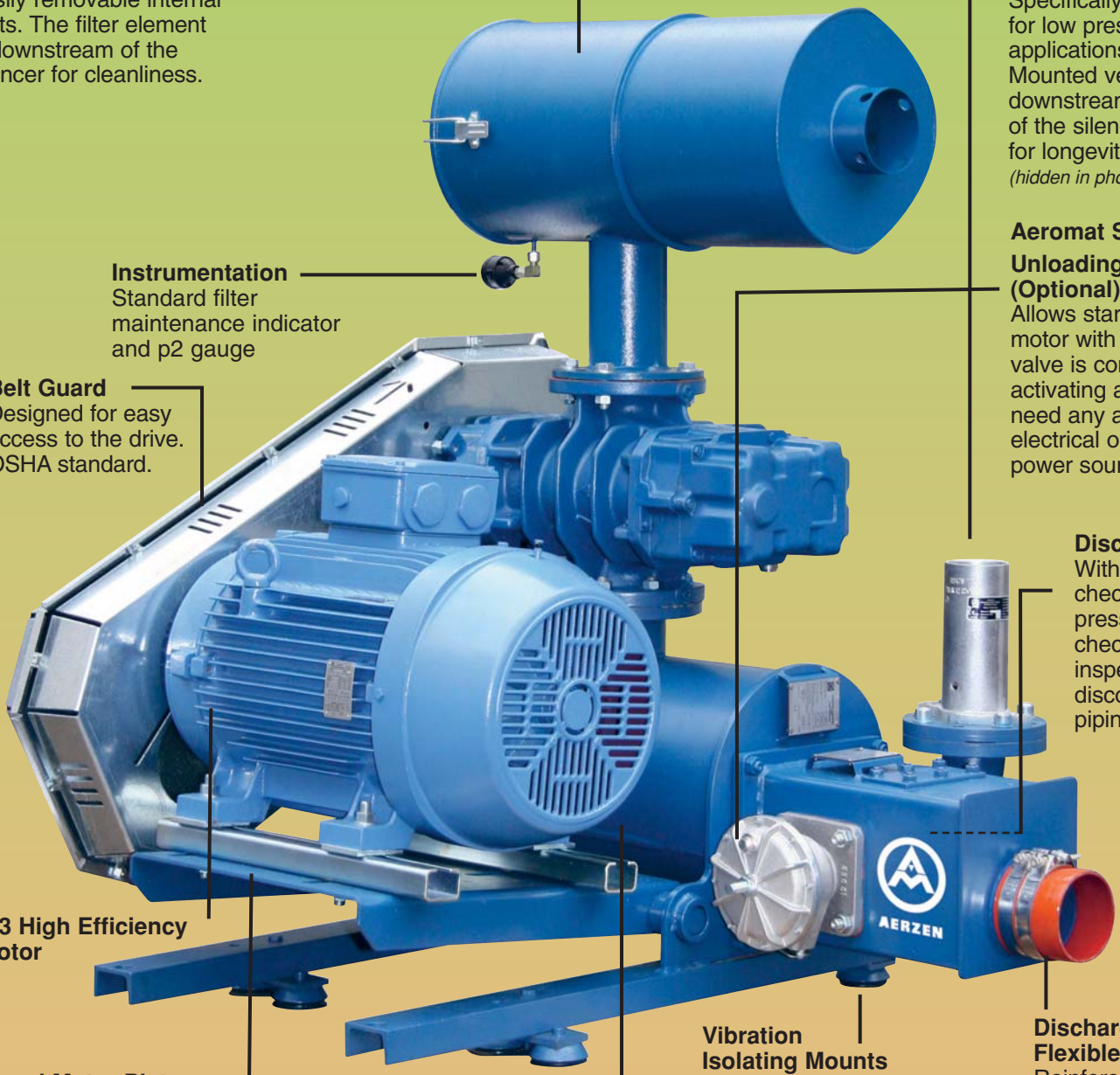

NEMA F3 High Efficiency TEFC Motor

Hinged Motor Plate
Steady alignment and consistent tension provided by the motor weight. No springs needed. Constant high efficiency.

Reactive Discharge "Aerzen 10 Combi-Mount Silencer"
Machined support surface for blower. Stiff for installation on vibration isolating mounts. Low pressure drop design. No absorption packing material. ATEX spark arrestor.

Vibration Isolating Mounts
Rubber-type. Located under the supporting base. No special foundation required.

Discharge Flexible Connector
Reinforced rubber. Downstream of discharge silencer to reduce transmission of structure-borne noise.

Optional ASG200 Blower Controller Control continuously monitors machine

G5 Blower Dimensions

G5 Blower W/O Motor							Nominal	
Aerzen Blower Model	Length Inches	Width Inches	Height Inches	Weight lbs.	Discharge Pipe Inches		Flow CFM	Pressure Rise
GM 3S	31	31	42	484	DN-50	2	106	Up to 15 psi
GM 4S	46	36	50	693	DN-80	3	141	Up to 15 psi
GM 7L	46	36	50	704	DN-80	3	242	Up to 10 psi
GM 10S	46	36	50	757	DN-80	3	353	Up to 15 psi
GM 10S	53	49	59	1118	DN-100	4	353	Up to 15 psi
GM 15L	53	49	59	1151	DN-100	4	529	Up to 10 psi
GM 25S	57	49	59	1276	DN-125	5	883	Up to 15 psi
GM 30L	76	59	78	2002	DN-150	6	1059	Up to 10 psi
GM 35S	76	59	78	2156	DN-150	6	1236	Up to 15 psi
GM 50L	76	59	78	2376	DN-150	6	1766	Up to 10 psi
GM 50L	86	67	83	3014	DN-200	8	1766	Up to 10 psi
GM 60S	86	67	83	3278	DN-200	8	2119	Up to 15 psi

Larger sizes up to 8,500 cfm available on request

Notes
1. For informational use only. Dimensions shown are close estimates and are subject to change without notice. Contact Aerzen USA if certified dimensions are required. Dimensions are in inches, weights are in lbs.
2. Weight notes: motor not included.
3. Oversize/overweight motors may require hinge plate support; dimensions and weights may vary. Consult Aerzen USA with specific application.
4. Packages available w/o sound enclosure. Consult Aerzen USA.

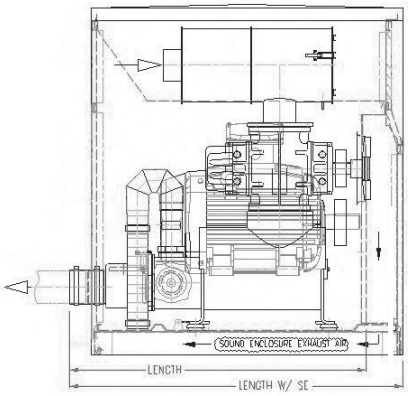

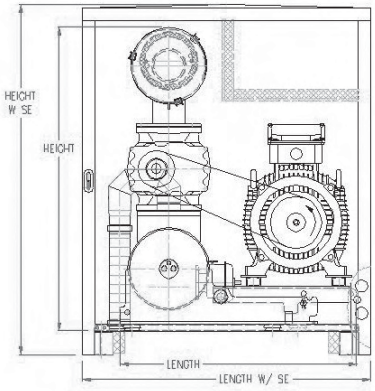

Aerzen means trouble-free compression.

Aerzen's modular blower packages have been offered since the 1960s. Aerzen Delta Blower packages have been in successful operation since the 1990s. They are just one of the offerings in our single stage positive displacement program. Whatever your application and installation requirements, be sure to consider Aerzen.

G5 Delta Care Maintenance Agreement.
Warranty: 5 years optional with our G5 Care Maintenance Agreement.

For Pressure
- Up to 15 psi: G5 Blower packages
- 10 to 51 psi: Oil-free and air-cooled VM and VML screw compressors

For Vacuum (Dry)
- Up to 15 Hg: G5 Blower packages
- Up to 25 Hg: G5 Blower packages with pre-inlet cooling
- Up to 25.5 Hg: Oil-free and air-cooled VM screw compressors at same flow (30% more efficient than PD blowers)
- Vacuum boosters to 10^{-3} mbar absolute

For Extended Pressure/Vacuum
- Up to 40,000 cfm available
- For other gases, higher pressure / vacuum consult factory

Cover photo: Delta Blower Generation 5
Similar design available for gases other than air.

AERZEN
One step ahead.

Aerzen USA
108 Independence Way
Coatesville, PA 19320
Phone: (610) 380-0244
Fax: (610) 380-0278
Service Hotline: (800) 444-1692
www.aerzenusa.com
E-mail: inquires@aerzenusa.com

Atlanta: (770) 951-7035

Houston: (281) 980-6651

Aerzen Canada
Phone: (450) 424-3966
www.aerzen.ca
E-mail: haerensa@aerzen.ca

Aerzen Mexico
Phone: (728) 282-5508
E-mail: ventosa@aerzen.com.mx

© 2009 Aerzen USA 2K0509

Printed on recycled paper with vegetable inks.

AERZEN DELTA BLOWER GENERATION 5
North American Standard
Positive Pressure

Standard range

Blower sizes: .....GM 3S to GM 60S

Package nominal sizes:.....2" (DN 50) to 8" (DN 200)

Medium: .....Air

Flow range: .....35 to 2120 icfm (1.0 to 60 m^3/min)

Differential pressure: .....15 psi (1000 mbar) for "S" and 10 psi (700 mbar) for "L" machines

Maximum operating temperature:.....285ºF (140ºC)

Drive: .....V-belt drive with totally automatic belt tension adjustment

Introduction

The Aerzen Blower is renowned for its performance and its reliability. There is no secret: From the blower-stage through the accessories, Aerzen enhances key features of each component by applying sound engineering, precision machining, and superior workmanship.

The Delta Blower Generation 5 (G5 for short) is the synthesis of four previous Aerzen blower package generations combined with an array of new technical innovations to provide five key advantages to our customers:

- The machinery noise level has been lowered yet another 6-8dBa[1] on average compared to the previous Delta Blower
- The blower package is even more user friendly especially in transport, installation, operation, and maintenance
- The oil level is visible from the outside of the package so the blower does not need to be shut down
- No absorption material is used in the discharge combination silencer; this eliminates the possibility of foreign objects contaminating the air or gas stream
- Use of a shaft mounted cooling fan, which reduces installation and operating costs by eliminating extra wiring, motor starters, and its interlocking with the main blower motor
- The compact footprint allows units equipped with sound enclosure to be mounted side-by-side since there is only one main maintenance access side

[1] Measured in 1m free-field conditions

Aerzen Delta Blower Generation 5 are pre-engineered modular compact packages, which offer a wide range of options from proven and standardized components at reasonable costs and short delivery times.

Shipped completely assembled, the Aerzen Delta Blower Generation 5 is indoor and outdoor rated. There is no extensive installation work - neither grouting nor special anchoring is required, just simply level it and bolt it to any standard industrial flooring or surface.

Scope of supply: basic configuration

- Aerzen Rotary Lobe Blower stage
- Combination Base Frame / Silencer combined with hinged motor plate for automatic belt tensioning – with 2 ½" diameter discharge pressure gauge
- Set of vibration isolating mounts under the entire blower package
- Inlet silencer – filter with filter maintenance indicator
- Narrow V-belt drive and protection guard
- Pressure safety valve
- Discharge manifold with integral check valve and flexible pipe connector
- Standard paint system
- NEMA electric motor TEFC, EPACT efficiency, with conduit box on top
- First oil fill and "Service kit"
- Packaging for domestic trucking
- Standard documentation in electronic format: English language, drawings with US-customary and metric units of measure

Standard options include (not limited to)

- Inlet pipe connection kit
- Sound enclosure with skid / oil-drip pan and forced ventilation
- Start-unloading valve Aeromat, with or without solenoid valve
- Pressure modulating valve Aeropress or Aeropress10S, pilot operated
- Other motors, e.g. Premium Efficiency with conduit box on top
- Instrumentation & controls, e.g. ASG200 Aerzen blower controller

Description of the main components

The combination of key components marked with a * in the description below significantly contribute to the reliability and performance of the Aerzen Blower:

At the heart of the package: The Aerzen Rotary Lobe Blower

Low vibration and low pulsations - a key feature:

* Internal pulsation interference channels in conjunction with 3-lobe rotors reduce the pulse in the discharge air stream by as much as 90% or 20 dB at the lobe-passing frequency. This significant attenuation contributes strongly to reducing vibrations in the entire package and lowering the noise emitted by the downstream piping.

Positive displacement characteristic:

- The blower moves a fixed volume of gas with each shaft rotation, nearly independently from the operating pressure.
- At constant differential pressure, the load torque remains constant.
- For a given pressure, the power is directly proportional to the speed.

Flow across the blower stage:

- Vertical from top to bottom

Drive shaft location:

- On the left when facing the blower shaft

Rotation:

- Counterclockwise when facing the blower shaft

Housing:

- The central section, “the cylinder” and the two side-plates house the rotors, while a gear case and a drive end cover contain the lubricating oil for bearings and gears. Individual side plates allow for optimal setting of the radial rotor clearances: a valuable feature on blowers with the gas flowing perpendicular to the rotors.
- Connections: full-size, flat-faced flanges
- * Maintaining internal alignment under all operating conditions is paramount for the reliability of any rotating equipment. The housing is, for this purpose, designed to support the entire blower stage on its outlet flange only; no need to worry about a “soft foot” or uneven base support
- Materials: Gray cast iron EN-GJL-200 equivalent to ASTM A48 Cl.30 AISI A278 Cl. 30

Rotors:

- Up to and including the model GM 60S, rotors and shafts are made of a single, drop forged steel piece made from C45 steel equivalent to AISI Type 1045. Solid or dust-tight rotors do not have any open cavities that can trap contaminants. This is particularly important in food applications and applications requiring high purity. Moreover, rotor balance is maintained and vibration is therefore minimized.
- Stiff rotor design: the rotors' first critical speed is always at least 10% above the maximum operating speed.
- The rotors meet or exceed the ISO 1940 / ANSI S2.19 G6.3 criteria of dynamic balancing

Timing gears:

- Helical gears with hardened and ground teeth to meet AGMA 12 quality standard with an AGMA service factor of 1.70.
- To maintain the advantage of high quality gears, the gear wheels are secured onto the shafts by means of a tapered interference fit. Optimum concentricity is achieved and neither gear hub nor shaft keys are used. To prevent damaging the seats, gear installation and removal are carried out using hydraulic pressure to expand the gear wheels within their elastic limit.

Bearings:

- The rotors are supported by anti-friction bearings
- The bearings are housed in the side-plates and are sized for an expected 5 years between overhauls.
- The drive-shaft bearing is a cylindrical roller bearing whereas the other bearings are selected to achieve the proper clearances between rotors and housing, axial loads from the helical bearings: smaller machines up to GM 50L feature double angular ball bearings.

Lubrication:

- Oil splash lubrication of all bearings and gears through oil spray disks on both blower ends
- An oil sight glass is provided on each oil sump.
- An oil drain valve is provided on each oil sump. The oil drain valves are directly mounted to the oil sump covers for clean, easy and fast oil change.
- Units with sound enclosure are plumbed together to an oil reservoir that serves as oil fill and drain device, and its oil sight glass is visibly mounted to the maintenance side of the enclosure.
- Aerzen USA provides the first oil fill with a lubricant as recommended in the operating manual as well as a service-kit containing hydraulic bottle jack, oil fill funnel, and oil drain hose.

Seals at the rotor chamber:

- The rotor chamber is sealed from the oil chambers by four, all metal, non-rubbing seals, each consisting of the following components and in that sequence:
  - Oil slinger ring
  - Two restrictive piston-rings in a labyrinth
  - "Neutral chamber" located between the piston rings used for venting the seal
  - Two restrictive piston-rings in a grooved labyrinth bushing

Seal at the drive shaft:

- Double, permanently lubricated Viton seal ring
- Shaft sleeve: replaceable, hardened steel

Testing

- Each blower stage is subject to a full-load test to verify the volumetric flow and power values.
- Acceptance criteria are +5% on power and –5% on flow for all machine sizes.
- Orifice flow measurement and conversion of results to the operating conditions in accordance with ISO 1217, simplified

The package component Aerzen Rotary Lobe Blower

Intake air silencer & filter

- Absorption-type silencer upstream of the air filter element. For reasons of cleanliness, there is no silencing material between the filter and the inlet blower flange.
- The carbon steel housing is powder-coated. Quick-release latches for quick access to the filter element
- Filter performance 93%, ASHRAE 52-76 (class 4, EN 779, separation > 95% @ 5 microns)
- Progressively compressed, thermally bound polyester fibers, free of PVC, smoothened and compressed on the clean airside for highest dust separation and retention capacity. The filter media is made of a single, 30 mm thick continuous mat, sown without glue.
- Included is a filter maintenance indicator. If the sound enclosure option is selected, the filter maintenance indicator is mounted to the enclosure wall.

Base with integral discharge silencer:

- In addition to the blower's internal pulsation cancellation feature, the combination discharge, three-chamber reactive silencer is used to further reduce the noise and residual pulsation in the air stream across a wide range of operating speeds. The residual pulsation downstream of the silencer meets or exceeds the API 619 recommended 2% peak-to-peak of the absolute line pressure.
- The discharge silencer is combined with the support base into one compact rugged unit. It is made from pressure vessel steel it forms a torsion resistant cylindrical vessel supporting the blower stage and other components.
- The mounting surface for the blower is a full-size steel flange machined and continuously welded to the base with the full number of tapped holes for the studs to fasten the blower to the base - no need to align blower feet or to worry about a soft-foot condition. A surface sealant is used instead of a gasket.
- Maximum operating pressure: 1.1 bar gauge (16 psig) and 150ºC (300ºF), built and certified to the latest European Pressure Vessel Code, PED. Test pressure: 1.9 bar g. (27.6 psig)
- The base is mounted on four vibration-isolating mounts[2]

[2] Three foot mounts are used on DN50 units

Belt drive

- Narrow, anti-static V-belts
- Selected for a minimum service factor of 1.4 times operating power (BHP), or 1.1 times the motor nominal power (nameplate HP), whichever is larger[3]
- * The Aerzen Delta Blower Generation 5 package provides entirely automatic tensioning of the belts. Thanks to the package configuration, the drive geometry is such that the motor hinges parallel to the motor shaft centerline, using the only the motor mass to maintain this tension without need for adjustments or springs. This not only reduces maintenance, it also reduces the potential for operating with too little (slipping belts) or excessive belt tension (excessive bearing and shaft load).
- The maintenance kit provided by Aerzen USA also includes a hydraulic jack used for lifting the motor to change V belts.
- Sheaves and bushings are dynamically balanced to ISO 1940 / ANSI S2.19 G6.3. For linear tip speeds > 6500 ft/min (33 m/s), nodular cast-iron, ventilated sheaves are used.

Belt guard

- OSHA compliant personnel guard, made of galvanized steel: either perforated steel or solid sheets with vents, depending upon the model.
- Units with sound enclosure feature hand protection fan and belt guards, and the enclosure itself serves as the ultimate protection device. The removable maintenance panels comprise lockable latches that help facilitate OSHA prescribed tag-out-lock-out procedures.

Vibration isolating mounts

- A set of vibration isolating mounts are located under the blower package to hinder the transmission of structure borne noise from the blower and the discharge silencer into any structure the package is installed on, such as a mounting skid if supplied with acoustic enclosure.

Discharge manifold

- Flange-mounted to the discharge silencer, the discharge manifold serves for mounting the pressure safety valve, an optional start-unloading valve and for connecting the blower package to the discharge piping.
- Materials of construction: welded carbon steel (Aluminum stub pipe for DN50)
- The discharge manifold houses the discharge check-valve

Pressure safety valve

- DN100-200 blower packages have a vertically mounted, spring loaded, safety pressure valve sized for the full flow of the blower. DN50 and DN80 blower packages feature horizontally mounted safety relief valves.
- * The valve's characteristic is nearly proportional. It not only opens, but also closes at the set pressure
- * The valve has a built-in dampener that allows the valve to actuate smoothly, which prevents the "pop-off" effect commercially available valves exhibit.
- Pressure rise up to 10% at full flow. Certification of conformity to PED
- Being an all-metal valve, it is not suitable as a pressure modulating valve. If this function is needed use an Aerzen pilot operated Aeropress or Aeropress10S pressure modulating valve.

---

[3] Higher values are not necessarily better as they could lead to belt slippage due to excessive stiffness, and also shaft damage (deflection) caused by higher tension values required by over sized v-belt drives.

- Materials: seat of gray cast iron and, depending on the size, a brass or anodized aluminum bell and piston, galvanized spring, steel spring rod, and an aluminum or fabricated external steel cylinder.
- Standard set points are 15.2 psig (1050 mbar) for “S” model blowers operating above 10 psi (700 mbar), and 10.9 psig (750 mbar) for all machines operating under 10 psi (700 mbar), including all “L” model blowers[4].
- The valve protects the blower stage against line surges, and spikes. It does not protect against prolonged overloads or excessive discharge temperature. Therefore, it is not an absolute protection device, nor is it “bubble tight”.

Discharge check valve

*
- A full-bore check valve that can be easily removed for inspection and maintenance without disconnecting the discharge piping[5]
- With its horizontal top-located steel shaft[6], the check valve naturally closes by gravity at no-flow.
- Without any springs, the check valve will not chatter, even at low flow conditions (for example in adjustable speed applications)
- Flap material: EPDM on steel for operating temperatures up to the blower limit
- Optional check valve flap material: Silicone rubber

Discharge flexible connector

- A reinforced silicone-rubber discharge flexible connector with heavy-duty clamps connects to the discharge piping.
- It prevents the transmission of structure-borne noise from the blower and its discharge silencer to the discharge piping.
*
- Located downstream of the silencer and with only a small gap (~1/2”) between the package and the pipe, the noise sent to the outside is maintained at a minimum.
- The sleeves are sized for standard, schedule 40 pipe diameters.

Discharge pressure gauge

- Liquid filled, 2 ½ “ dial. Units: mbar and psi
- If the sound enclosure option is selected, the discharge pressure gauge is mounted to the sound enclosure wall.

---

[4] The valves are adjustable, and different springs are available for other set points depending upon operating conditions, motor limitations, or customer’s requests.

[5] Except DN50

[6] Except DN50

Optional sound enclosure

- Covering the entire blower package with the drive motor, the enclosure provides suitable protection for outdoor installation up to 40 mph winds and 14 lb/ft^2 snow load and rain at 45º
- The enclosure and the blower package are both mounted on a skid / oil-drip pan, designed for meeting environmental protection standards as well as for easy transportation and installation.
- The unique Aerzen package design makes it possible to mount multiple blowers side-by-side without hindering access to the maintenance side (front). All pipe and wiring connections are made from the backside. This offers the best use of available floor space.
- All maintenance activities can be carried out from the front of the package, e.g. air filter, belts, and oil maintenance. The oil level is visible from the outside and eliminates any guesswork. Oil can be filled and drained from a common reservoir that also houses the oil level gauge. The oil level check can be done with the blower in operation.
- The enclosure reduces the package noise level to less than 80 dB(A) – 75dB(A) in most cases- at 1 m, free field, per DIN 45635.
- Quick release panels, each less than 50 lb (as mandated by MSHA) provide quick and easy access to the blower and the package components for routine maintenance.
- Blower packages are fitted with a shaft-mounted cooling fan for sufficient heat removal. There is no need for a separate electric driven fan and required interlock and controls.
- Aerzen mounts the blower package in the sound enclosure at our factory prior to shipment.
- Panels are made of galvanized steel sheet, with packing self-extinguishing, non-dripping high-density polyester foam as absorption material.
- The enclosure is powder coated in a UV resistant Aerzen Royal Blue color, accented with light gray maintenance panels

Appendix F
Pre-Engineered Buildings

DRAFT

20' to 32' wide GABLE BUILDING with gutter

APPROVAL

SHEET

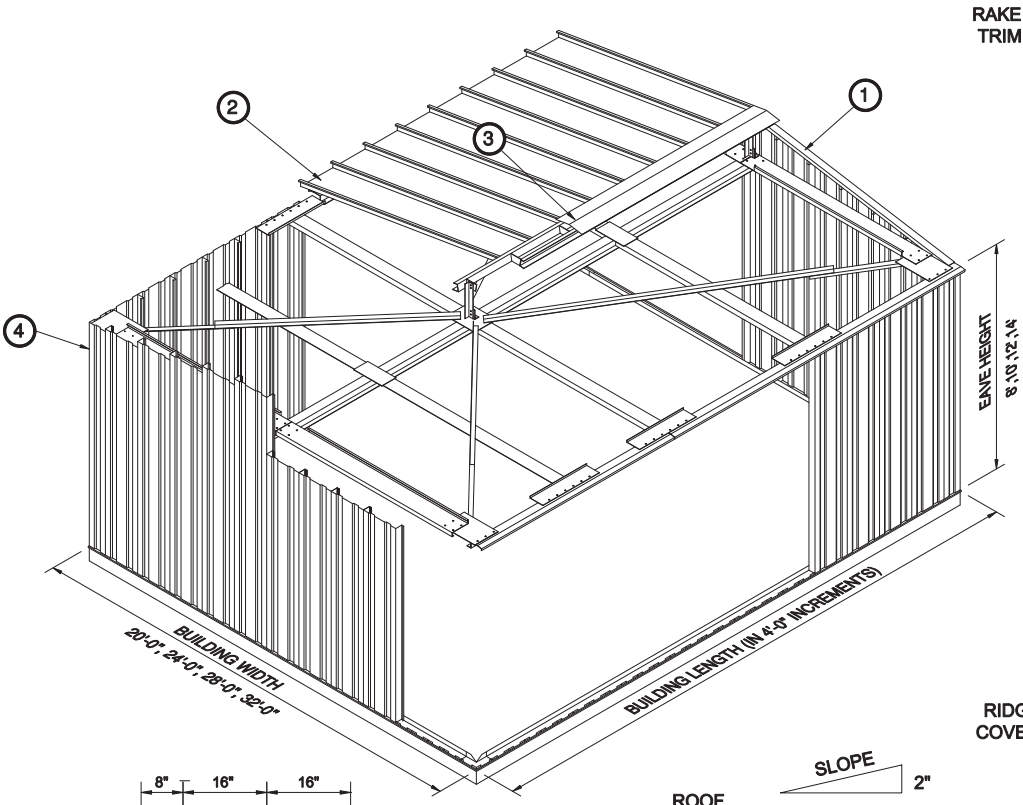

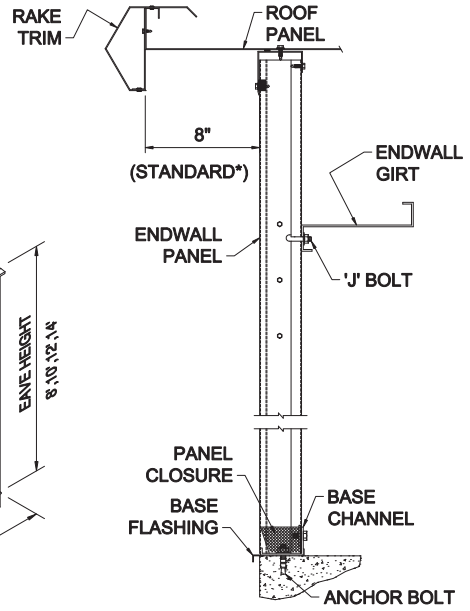

1 WALL SECTION

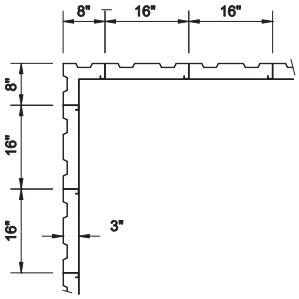

4 CORNER DETAIL

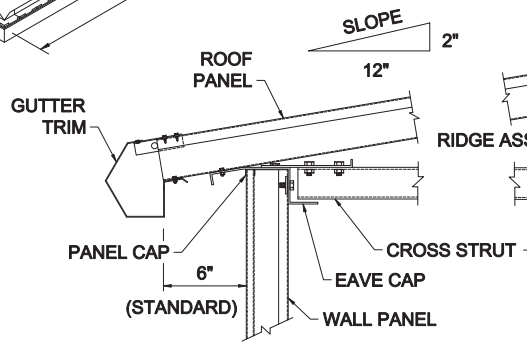

2 EAVE DETAIL

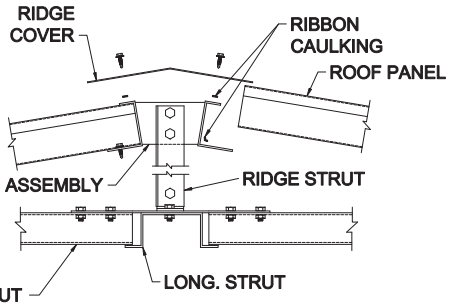

CLEAR HT. = EAVE HT. - 2 1/2"

3 RIDGE DETAIL

TYPE AL

Roof Design

A. Each "Type AL" building shall have a gable roof with a slope of 2" in 12". Interlocking roof panels shall be nominal 24 gauge, fastened to an eave cap with ¼" diameter Type 430 stainless steel bolts through factory punched holes. The ridge of the roof shall be a welded double channel assembly sealed with a minimum 20 gauge steel cover.

B. The interlocking panel roof system shall extend a minimum of 0'-8" over the endwall panels* and a minimum of 6" over the sidewall panels of the building

C. The building roof line shall be finished with nominal 26 gauge factory painted rake trim having matching ridge and eave cornices. Color of rake trim and cornices shall be Arctic White or Roman Bronze.

D. The sidewalls of the building shall have a nominal 26 gauge factory painted guter and downspout system to match the rake trim.

Structural Framing

Angle or channel bracing components shall be placed across the building width to allow the building width to allow transmission of horizontal wind loads. All wind bracing components shall be of nominal 14 gauge galvanized steel.

Where required for proper transmission of lateral wind loads, structural frame wind bents shall be installed. Wind bents shall consist of a bolted column and rafter assembly of steel conforming to ASTM A 36 specifications.

* 8" ENDWALL OVERHANG NOT AVAILABLE ON BUILDINGS WITH P68 ROOF PANELS

PARKLINE, INC.

A-AL-20-32-G

11-05

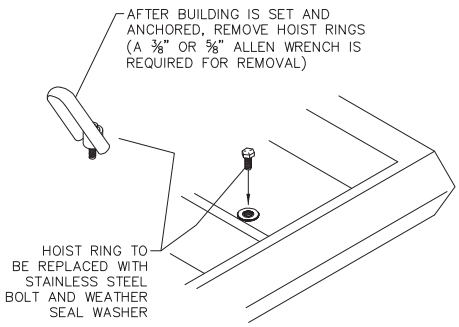

HOIST RING DETAIL
(FOR ROOF LIFTED BUILDINGS)

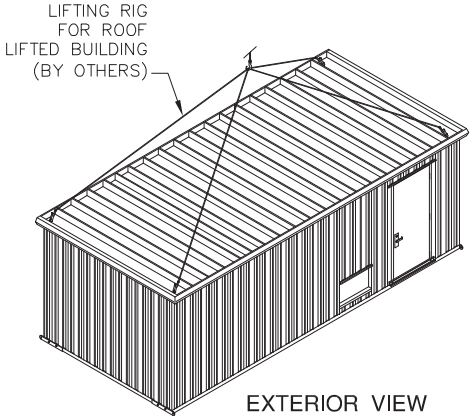

EXTERIOR VIEW
(ROOF LIFTED BUILDING)

Skid Design
Each building shall be factory erected in a controlled environment on:

1 - A tube skid is to be used if building is to be set on a customer-supplied concrete foundation.

2 - An angle skid is to be used if building is to be set on a customer-supplied I-beam skid or concrete foundation.

3 - A structural perimeter frame is to be used if a floor system is required.

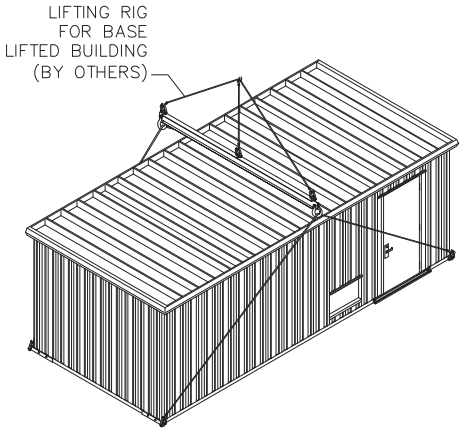

EXTERIOR VIEW
(BASE LIFTED BUILDING)

Building Design
Factory-assembled buildings consist of a self-framing building, using the walls and roof as the structural supporting system. Buildings can be supplied in single slope or gable roof design and shipped in multiple sections. The roof system shall include gutter and rake trim for a finished appearance. Building to include accessories, electrical, HVAC and interior finishes as required by the customer. All assemblies will be completed in a controlled environment to ensure a quality product.

Typical sections of three available skid designs.

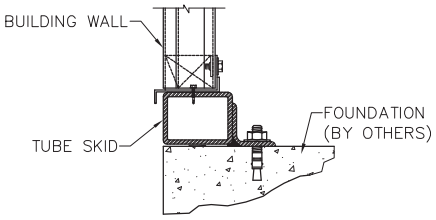

TUBE SKID

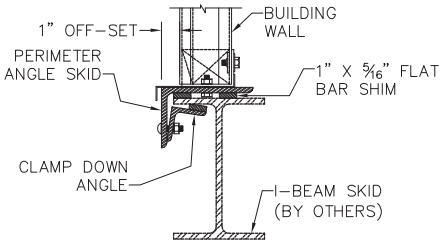

ANGLE SKID

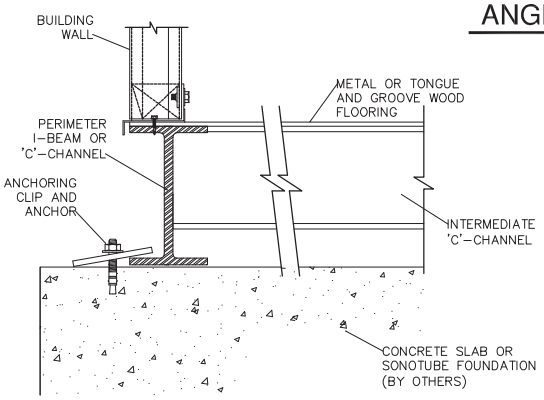

STRUCTURAL SKID W/ FLOOR

ROLLING SERVICE DOOR

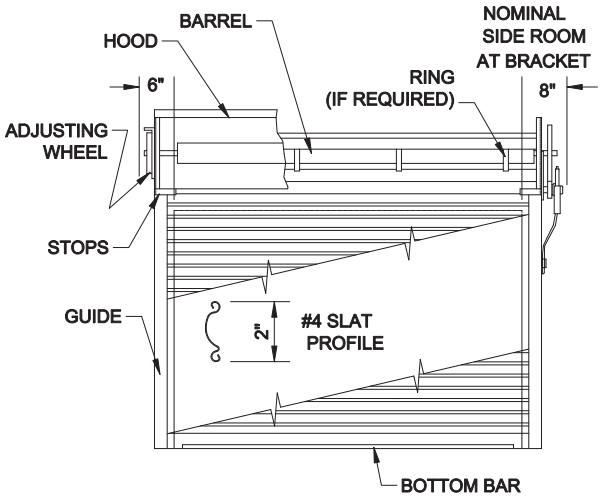

RIGHT HAND OPERATED DOOR SHOWN
LEFT HAND OPERATED DOOR OPPOSITE

COILSIDE ELEVATION

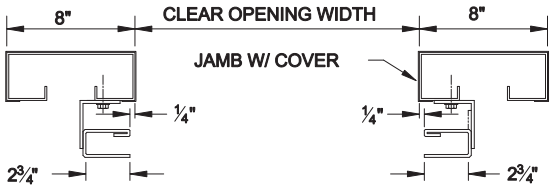

GUIDE SECTION

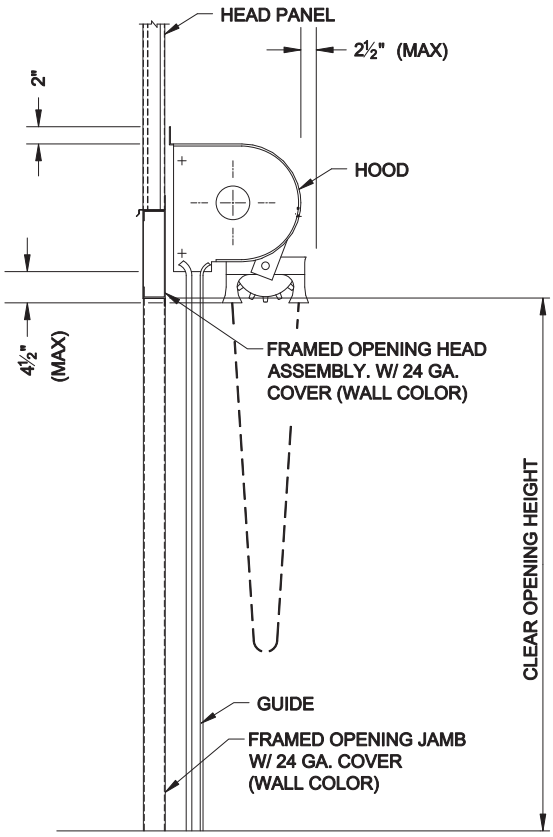

CROSS SECTION

PRODUCT DESCRIPTION

ROLLING SERVICE DOOR
WAYNE DALTON, MODEL 924 ™

Designed to withstand 20 #/Sq.Ft. windload. Curtain is 24 gauge steel crown type. Windlocks on each end of every other slat. Bottom bar is galvanized steel. Double angle with astragal standard. Guides are roll formed with integral bar. Hoods are 24 gauge galvanized steel. Shop coat of rust inhibitive primer on galvanized and non-galvanized steel surfaces and operating mechanisms. Guides and bracket plates will be coated with a flat black prime paint. All galvanized per ASTM. A-525 standards.

Optional Chain Hoist:

Door(s) operated by means of reduction gears or roller chain sprockets with lift effort not to exceed 25 lbs. electro galvanized hand chain furnished with pad-lockable chain keeper.

NOTE:

Curtain finish:	Galvanized and Prime Steel
Bottom bar finish:	Galvanized Steel
Guide finish:	Prime Steel
Hood(s) finish:	Galvanized and Prime Steel

NOTES:

1. - Refer to floor plan and elevation drawing for exact size and location of accessories.
2. - Refer to page #2 for clearances.

PARKLINE, INC.

Appendix G
Progressive Cavity Pump Data Sheet and Drawings

DRAFT

EQUIPMENT DATA SHEET

PROJECT INFORMATION

Project: Guadalupe WWTP Improvement Project **Job No.:** 6576
Prepared By: Michael Hill **Date:** 9/1/2010
Revised By: _____ **Date:** _____ **Rev. No.:** _____
Revised By: _____ **Date:** _____ **Rev. No.:** _____
Revised By: _____ **Date:** _____ **Rev. No.:** _____

PRELIMINARY DESIGN INFORMATION

Equipment Name: Sludge Feed Pumps
Specification Section: 11324 **Title :** Progressive Cavity Pumps
Equipment Location: Sludge Handling Facilities
Equip. Type: Pump **Equip. Service:** Waste Activated Sludge
Equip. Dimensions:
Equip. Weight:
Materials of Construction: Buna N rubber Stator and tungsten carbide rotor

Equip No.	Equipment Capacity	Motor/ Load (HP)	Standby Power	Motor Speed (RPM)	Equip Speed (RPM)	Maintenance	
						Type	Freq.
P-401		3	☐ Yes ☐ No	1,800			
P-402		3	☐ Yes ☐ No	1,800			
			☐ Yes ☐ No				
			☐ Yes ☐ No				
			☐ Yes ☐ No				

No. of future additional units: _____

COMMENTS: Proposal does not include cost of installation

DESIGN DEVELOPMENT INFORMATION

GENERAL

	Manufacturer A	Manufacturer B	Manufacturer C	Manufacturer D
Specified MFGR	Seepex	Netzch	Moyno	
Model				
Est. Cost/unit				
Expected Lift				
Delivery Time				

(Catalog cut sheets and standard specification of specified manufacturers enclosed)

MECHANICAL

Inlet Pressure: _____ **Outlet Pressure:** _____

Inlet Diameter: _____ **Outlet Diameter:** _____

SUPPORT UTILITIES

Water: ☒ None ☐ Potable ☐ Non-potable ☐ Utility

Capacity: _____gpm, _____ psi

Drainage: ☒ None ☐ Hub Drain ☐ Floor Drain ☐ Floor Sink ☐ Size ___

Air: ☐ Utility ☐ Instrument ☒ None ☐ None ☐ None

Capacity: _____gpm, _____ psi

Lube Oil: ☐ None ☐ Lubricator

Hydraulic: ☐ None ☐ Power Pack

HVAC

Heat Loss: _____BTU/hr **Combustion Air:** _____scfm

EQUIPMENT INSTALLATION REQUIREMENTS

Equipment Mounting ☒ Base Plate ☐ Skid Frame ☐ Support Legs ☐ Backboard

Structural Support ☒ Equip Pad ☐ Equip Base ☐ Isolation Base

☐ Piers ☒ Wall Brackets Height ____ft

Lifting Requirements ☐ None ☐ Lifting Eyes ☐ Monorail ☐ Bridge Crane

Service Platforms ☐ Yes ☒ No

☐ Equip Supported ☐ Yes ☐ No ☐ Partial

ELECTRICAL

Motor Type

☐ Horizontal ☐ Induction ☐ Contstant Speed

☐ Vertical (Chamber) ☐ Synchronous ☐ Two Speed

☒ Totally Enclosed ☐ Wound Rotor ☐ Reversing (classifier)

☐ Submersible ☒ Variable Speed

Motor Duty ☐ Continuous ☒ Intermittent

Environment ☐ Indoor ☒ Outdoor

☐ Damp ☐ Wet ☐ Corrosive ☐ Hazardous

Variable Speed ☒ Adjustable Frequency

☐ DC – SCR

(If Applicable) ☐ Eddy Current

☐ Hydrostatice

☐ Other _____

·ight: This drawing is our property and patented for us according to the law of copyright and associated rights !

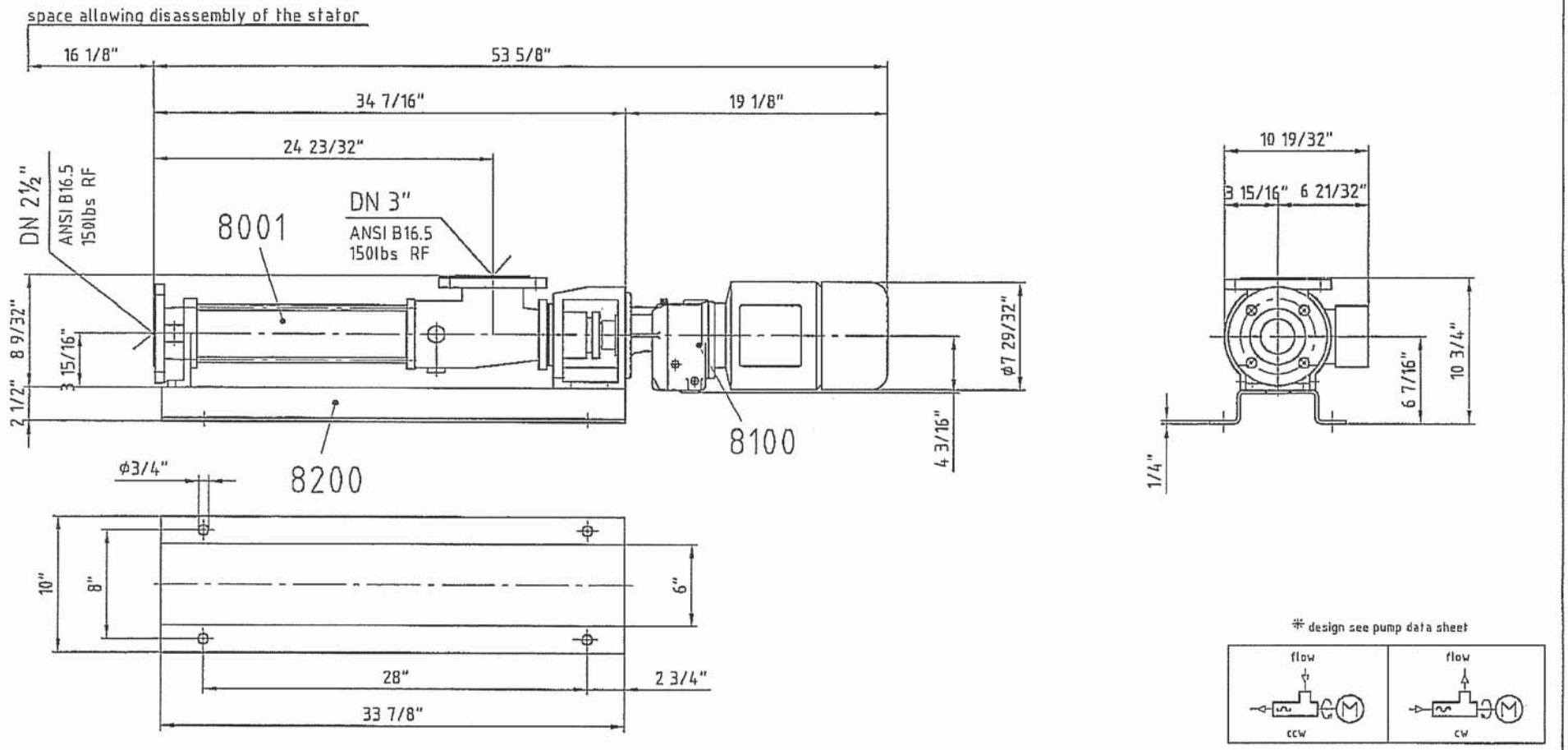

	baseplate:	8200		Var.: 801-200/0050-C-100		15
	drive: Nord Sk12F-100L	8100				29
	pump: BN 5-12 / 10-6L / 15-6LT / 8-12T	8001				37
nt.	Denomination	Item	Material	Note		Weight / kg

		2003	Name	Day	Scale	Weight	Denomination
·epex.com	seepex, Inc. 511 Speedway Drive Enon, OH 45323 www.seepex.com	Drawn	her	31.10.	◎▷ 1:10	81 kg	dimensional drawing
		Checked			EDP-No. L:\Lfdzchng.590\59010.dwg		Drawing-no. 262-C18/0050-C-138A4

ıes of dimensions reserved

Characteristic Curves
Size
10–6L

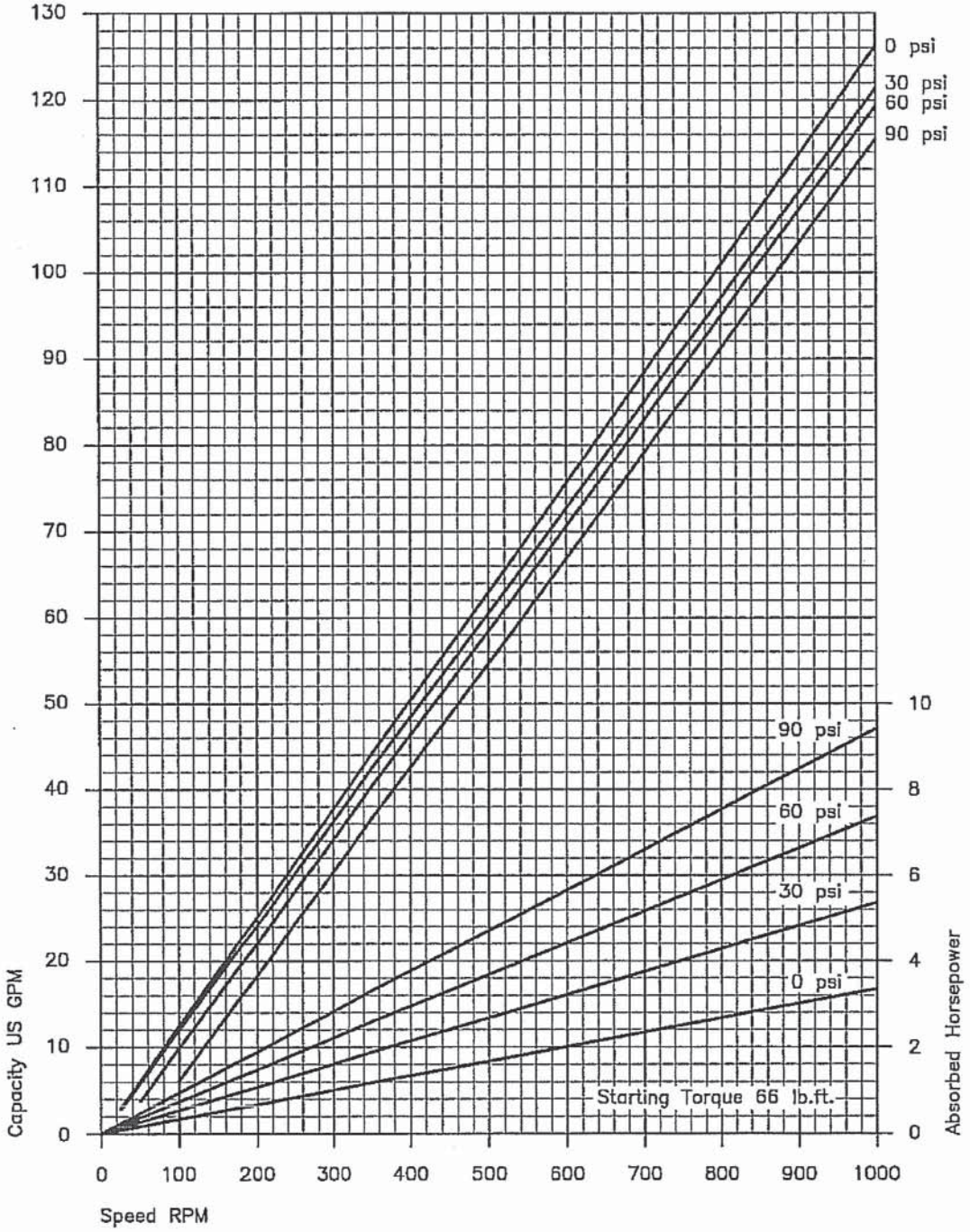

Values based upon water 68°F ; For notes on drive selection refer to PER

Appendix H
Sludge Dewatering Screw Press Data Sheets

DRAFT

EQUIPMENT DATA SHEET

PROJECT INFORMATION

Project: Guadalupe WWTP Improvement Project **Job No.:** 6576
Prepared By: Michael Hill **Date:** 9/1/2010
Revised By: _____ **Date:** _____ **Rev. No.:** _____
Revised By: _____ **Date:** _____ **Rev. No.:** _____
Revised By: _____ **Date:** _____ **Rev. No.:** _____

PRELIMINARY DESIGN INFORMATION

Equipment Name: Sludge Dewatering Screw Press
Specification Section: 11470 **Title :** Sludge Handling Facilities
Equipment Location: Sludge Handling Facilities
Equip. Type: Sludge Handling Equip. **Equip. Service:** Waste Activated Sludge
Equip. Dimensions: 17.3" Diameter
Equip. Weight:
Materials of Construction: 316 Stainless Steel

Equip No.	Equipment Capacity	Motor/ Load (HP)	Standby Power	Motor Speed (RPM)	Equip Speed (RPM)	Maintenance	
						Type	Freq.
SDG-401	100 lb/hr	2	☐ Yes ☒ No	1,800	1.9		
			☐ Yes ☐ No				
			☐ Yes ☐ No				
			☐ Yes ☐ No				
			☐ Yes ☐ No				

No. of future additional units: _____

COMMENTS: Proposal does not include cost of installation

DESIGN DEVELOPMENT INFORMATION

GENERAL

	Manufacturer A	Manufacturer B	Manufacturer C	Manufacturer D
Specified MFGR	Huber	FKC		
Model	Rotomat RoS3	BHX 600		
Est. Cost/unit	$201,000	$229,000		
Expected Lift				
Delivery Time				

(Catalog cut sheets and standard specification of specified manufacturers enclosed)

MECHANICAL

Inlet Pressure: _____ **Outlet Pressure:** _____

Inlet Diameter: _____ **Outlet Diameter:** _____

SUPPORT UTILITIES

Water: ☐ None ☒ Potable ☐ Non-potable ☐ Utility

Capacity: _____gpm, _____ psi

Drainage: ☐ None ☐ Hub Drain ☐ Floor Drain ☐ Floor Sink ☒ Size ___3”

Air: ☐ Utility ☒ Instrument ☐ None ☐ None ☐ None

Capacity: _____gpm, _____ psi

Lube Oil: ☐ None ☐ Lubricator

Hydraulic: ☐ None ☐ Power Pack

HVAC

Heat Loss: _____BTU/hr **Combustion Air:** _____scfm

EQUIPMENT INSTALLATION REQUIREMENTS

Equipment Mounting ☐ Base Plate ☐ Skid Frame ☒ Support Legs ☐ Backboard

Structural Support ☒ Equip Pad ☐ Equip Base ☐ Isolation Base

☐ Piers ☒ Wall Brackets Height ____ft

Lifting Requirements ☐ None ☐ Lifting Eyes ☐ Monorail ☐ Bridge Crane

Service Platforms ☐ Yes ☒ No

☐ Equip Supported ☐ Yes ☐ No ☐ Partial

ELECTRICAL

Motor Type ☐ Horizontal ☐ Induction ☐ Contstant Speed

☐ Vertical (Chamber) ☐ Synchronous ☐ Two Speed

☒ Totally Enclosed ☐ Wound Rotor ☐ Reversing (classifier)

☐ Submersible ☒ Variable Speed

Motor Duty ☐ Continuous ☒ Intermittent

Environment ☐ Indoor ☒ Outdoor

☐ Damp ☐ Wet ☐ Corrosive ☐ Hazardous

Variable Speed ☒ Adjustable Frequency

☐ DC – SCR

(If Applicable) ☐ Eddy Current

☐ Hydrostatice

☐ Other _____

Date: 6/30/10

To: Whom it may concern

Reference: Guadalupe, CA

Subject: RoS3Q Sludge Dewatering Equipment

We are pleased to provide you with the following preliminary budget worksheet for the Guadalupe, CA project. By choosing the Huber Technology ROTAMAT Series™ sludge dewatering system, you are selecting state-of-the-art technology that provides optimized operational efficiency.

The RoS3Q is a screw press with a conical screw shaft and cylindrical sieves consisting of three treatment zones: inlet/drive zone, three-part thickening/dewatering zone, and press zone with pneumatic counter-pressure cone.

Huber's patented injection mixing ring will mix the polymer and thin sludge before it enters the unit. The RoS3Q does not require a flocculation tank for retention time of the sludge and polymer to form flocculations, this is done in the piping leading up to the unit. After the thin sludge and polymer have been adequately held for the appropriate retention time the sludge is conveyed through the three-part basket, as described above, where it is efficiently dewatered.

The Screw Press RoS3Q provides the following benefits:

Design Benefits

- Insensitive to coarse material due to the wide gap between the screw conveyor and sieve
- No permanent sieve cleaning required
- Pneumatically controlled pressure cone system
- Defined sludge residence time
- No filter cake production
- Minimum wear due to the low speed of the compacting screw
- High dewatering degrees
- ≥95% Capture Rate

Operational Benefits

- Full-automatic and continuous operation
- Minimal operator attendance
- Easy to start-up and shut-down
- Few wear parts
- Easy maintenance
- No need for hosing down
- No noise or vibrations
- No emission of odor or spray water (aerosols)

Cost Benefit

- Very low wash water consumption
- Low power consumption
- Little operator attendance
- Very low maintenance costs
- Low investment costs

A NEMA 4X panel housing the PLC and control switches is provided with each equipment to monitor and control system performance. Critical performance parameters are continuously monitored to ensure that trouble free operation is being provided at all times.

This worksheet is for your planning and use. Please carefully review our design criteria for peak flow rate, and design conditions to ensure that the criteria used matches actual project parameters. When detailed project design commences, please contact us for a review of all design parameters, including dimensions and equipment requirements. Once you have confirmed your design parameters and budget, we would like to make available to you, at your request, a complete designer's package including a formalized proposal, detailed specification, and general arrangement drawings.

Huber Technology's price for the enclosed design is **$201,000**. This quoted price includes the equipment as described, freight to site, and start-up by qualified personnel. This quote excludes any taxes that may be applicable. The above information is to be used for budget estimates only and is valid for 60 days.

Please do not hesitate to contact us if you have any questions or would like further information. Thank you for your interest in Huber Technology and our products. We look forward to working with you on this project.

With best regards,
Huber Technology, Inc.

T.R. Gregg
Western Regional Sales Manager
Enc.

DESCRIPTION
ROTAMAT® RoS3 Model: One (1)x RoS3Q-440 Influent Solid Concentration:0.5% d.s Total Hydraulic throughput: 35,000 GPD (39 GPM) Solids throughput: 100 lbs/hr Running time: 15 hrs/day Capture rate: ≥95% Volatile Solids: < 65% Including: • 304 stainless steel construction; pickled and passivated in acid bath • Wedge wire basket • Support legs • 2.0HP, 3ph/460VAC/60Hz main drive motor, Class 1 Division 2 • One (1) solenoid valve, 2-way brass body, Class 1 Division 2 • Magnetic-inductive flow meter • Polymer injection system, including a progressive cavity pump is optional. • Thin sludge pump, progressive cavity, is optional. • Wall mounted or stand-alone NEMA 4X stainless steel control panel • Standard manufacturer's services have been included. Additional services are available on a per diem rate upon request.

Notes

1. Equipment specification is available upon request
2. If there are site-specific hydraulic constrains that must be applied, please consult the manufacturer's representative to ensure compatibility with the proposed system
3. Electrical disconnects required per local NEC code are not included in this proposal
4. Huber Technology warrants all components of the system against faulty workmanship and materials for a period of 12 months from date of start-up or 18 months after shipment which ever occurs first
5. Budget estimate is based on Huber Technology's standard Terms & Conditions and is quoted in US$ unless otherwise stated

Control Philosophy
RoS 3Q

1. Drawing

Status: 31.05.2010

2. Control and instrumentation diagram:

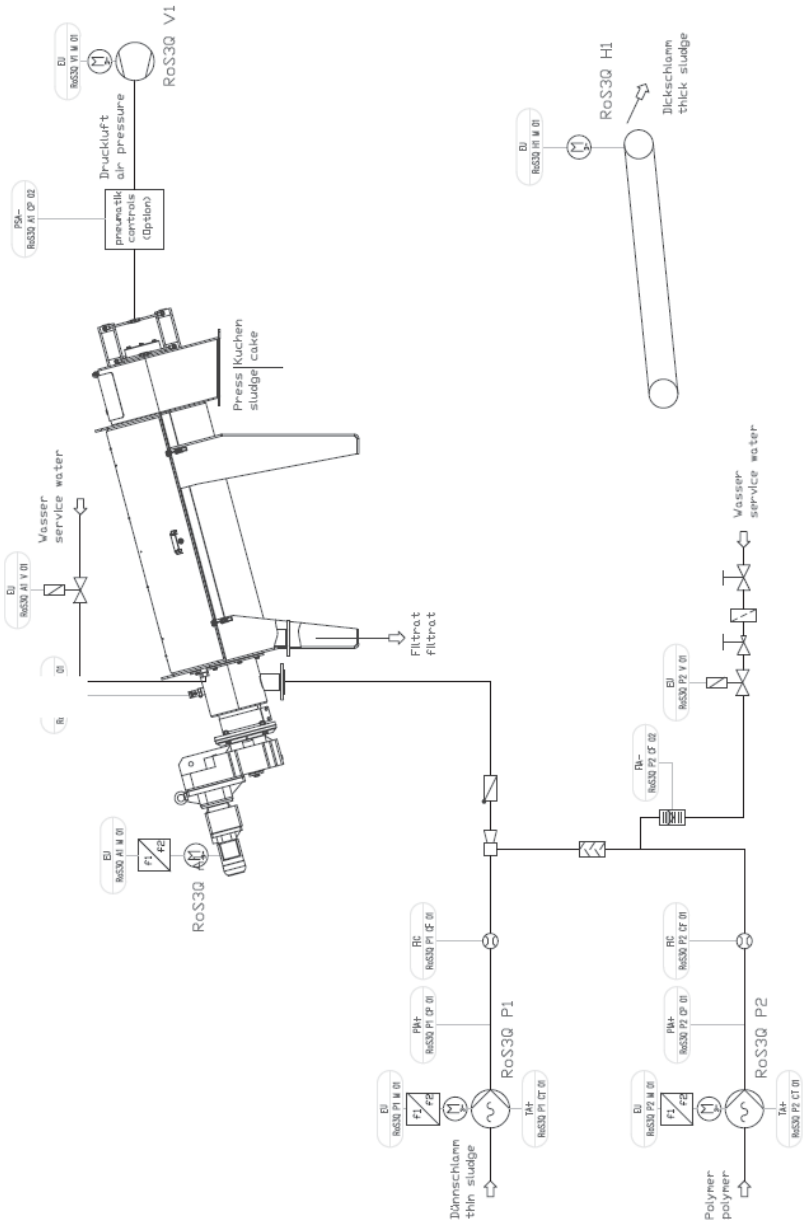

Built-in components, see control & instrumentation diagram and consumer & measuring points list.

3. Electric measuring and automatic control devices

Press motor	A01 A1 M 01	
Solenoid valve for washing system	A01 A1 V 01	
Pressure probe for press	A01 A1 CP 01	
Pressure probe for pressure air supply	A01 A1 CP 02	
Thin sludge pump	A01 P1 M 01	(Option)
Flow meter for thin sludge pump	A01 P1 CF 01	(Option)
Thin sludge pump dry run protection	A01 P1 CT 01	(Option)
Thin sludge pump overpressure protection	A01 P1 CP 01	(Option)
Coagulant agent dosing pump	A01 P2 M 01	(Option)
Flow meter for coagulant agent dosing pump	A01 P2 CF 01	(Option)
Dry run protection for coagulant agent dosing pump	A01 P2 CT 01	(Option)
Overpressure protection for coagulant agent dosing pump	A01 P2 CP 01	(Option)
Solenoid valve of secondary dilution unit	A01 P2 V 01	(Option)
Secondary dilution flow controller	A01 P2 CF 02	(Option)
Thick sludge removing conveyor	A01 H1 M 01	(Option)
Compressor motor	A01 V1 M 01	(Option)

4. Functional description

4.1 General requirements:

- All aggregates to be equipped with operation and fault indication.
- The drives to be equipped with a manual emergency operation level for the purpose of start-up and service work.
- Input parameters, such as limit values or running times, to be changed via selectable parameters.
- Operating hours counter to be provided for all drives.
- Machine-specific protection devices (overcurrent release, dry run protection) immediately switch off the respective aggregates.
- Plant-related safety and emergency cutoff concepts must be taken into account.
- The machine must be equipped with one or several emergency stop command devices. The theoretical performance level ‘c’ is required.
- Stop category ‘0’ must be realized.
- The machine is to be equipped with a mains isolator (or suitable net isolator) to enable the switch-off of energies (electricity, pressure air, water).
- Applicable standards are to be observed when designing the electrical control system, in particular the following:

Directive / standards	Title	CE conformity	Notes
DIN EN 62079	Creation of instructions, outlines, contents and specifications	2001	Harmonized standards
2006/95/EC	**EC directive: Low voltage directive**	**2006**	
DIN EN 60204-1: 2006	Safety of machines; Electrical equipment of machines, Part 1: General requirements	6.11.2007	Harmonized standards
2004/108/EC	**EC directive: EMC**	**2004**	
EN 61000-6-4: 2007	Electromagnetic compatibility Basic standards for emitted interference for industries	25.09.2007	Harmonized standards
EN 61000-6-2: 2005	Electromagnetic compatibility Basic standards for interference resistance for industries	1.06.2008	Harmonized standards
2006/42/EC	**EC directive: machine:**	**2006**	Valid as of: 29.12.2009
EN 61000-6-4: 1995	Safety of machines – avoidance of unexpected starting	15.10.1996	Harmonized standards
DIN EN ISO 13849-1: 2006	Safety of machines – safety-related parts of electrical control systems – part 1: general design guidelines	8.05.2007	Harmonized standards
DIN EN ISO 13850: 2006	Safety of machines – emergency stop, design guidelines	8.05.2007	Harmonized standards

4.2 Intended use / working principle:

The ROTAMAT® Screw Press RoS 3Q is intended for continuous dewatering of sludge. Dewatering is achieved by the pressure generated in the screening element. While the thin sludge is continuously conveyed through the sludge press, from the inlet up to the discharge, it is compacted and rotated and the water set free is filtrated.

4.3 Plant start

When the plant is started (via manual switch, on the process operation unit, via process control system, or automatically via an external start signal such as from the sludge tank level meter) and the following starting conditions are given,

- Emergency stop not operated
- No faults indicated on any plant components
- Dosing plant is ready to dose
- External start signal
- Sufficient pressure air measured by the pressure probe for pressure air supply **(A01 A1 CP 02)**

the plant starts to operate according to the following functional description.

After a programmed time (3 seconds) the following plant components start to operate:

- Start of washing system **(A01 A1 V01)** (see separate description)
- Press motor start (**A01 A1 M 01)**
- Start of coagulant agent dosing pump **(A01 P2 M 01)**, solenoid valve of secondary dilution **(A01 P2 V 01)** (option)
- Thin sludge pump start **(A01 P1 M 01)**

4.4 Feeding

The sludge to be dewatered is sucked in by an infinitely variable eccentric screw pump (thin sludge pump) **(A01 P1 M 01)** and pressed through a mixing device. The required sludge flow rate is adjusted manually via a frequency converter. The flow rate can be measured by means of the flow meter for the thin sludge pump **(A01 P1 CF 01).**
As an option, a control circuit with nominal-actual comparison can be built up with the flow meter for the thin sludge pump **(A01 P1 CF 01)**.

In the injection and mixing unit the sludge and polymer solution are intensively mixed under addition of coagulant agents. A coagulant agent dosing pump **(A01 P2 M 01)** adds the coagulant, the dose of which depends on the thin sludge flow and thin sludge concentration. The dose can be varied manually or linearly to adjust to

varying sludge rates. The fed amount of dosing agent can be measured by means of the flow meter for the coagulant agent dosing pump **(A01 P2 CF 01).**
As an option, a control circuit with nominal-actual comparison can be built up with the flow meter for the coagulant agent dosing pump **(A01 P1 CF 01)**.

The think sludge pump **(A01 P1 M 01)** and coagulant agent dosing pump are equipped with a thermal dry run protection **(A01 P1 CT 01; A01 P2 CT 01)**. When the dry run protection responds, the feed is immediately stopped.
Option:
If the plant is operated with a secondary dilution unit, the solenoid valve for secondary dilution **(A01 P2 V 01)** is actuated parallel to the coagulant agent dosing pump **(A01 P2 M 01)** operation. The water flow is controlled by a flow controller **(A01 P2 CF 02)**. If the flow falls below MIN flow and the flow controller **(A01 P2 CF 01)** responds, the feed is stopped and the plant changes over into cleaning mode.

In case of a thin sludge pump **(A01 P1 M 01)** or coagulant agent dosing pump **(A01 P2 M 01)** fault (or as an option a fault of the solenoid valve for secondary dilution **(A01 P2 V 01**) the feed is stopped and the machine changes over into cleaning mode. The machine also changes into cleaning mode, if a signal as described under *plant starting sequence* is missing.

4.5 Dewatering process
The sludge / coagulant agent mix to be dewatered flows via the injection and mixing unit into the screw press.
The RoS3Q is operated with an electric motor (press motor) **(A01 A1 M 01)** with frequency converter. The sludge is continuously conveyed and dewatered from the entrance point up to the discharge, at a constant nominal rotary speed (which is determined at the time of plant start-up).

When the feed rate exceeds the plant's maximum throughput capacity, the pressure inside the inlet chamber of the press rises. When the pressure probe **(A01 A1 CP 01)** for the press measures the limit pressure level, the feed is stopped **(A01 P1 M 01; A01 P2 M 01, A01 P2 V 01)**. The feed **(A01 P1 M 01, A01 P2 M 01, A01 P2 V 01)** is allowed to start again when the pressure probe for the press **(A01 A1 CP 01)** no longer measures the limit pressure level and a selectable delay time has expired (reactor level below MAX level).
If the pressure probe for the press measures the limit pressure as frequently as programmed within an also freely programmable time **(A01 A1 CP 01)** after machine re-start, the dewatering process is interrupted and a fault indicated.

In case of a drive motor **(A01 A1 M 01)** fault, the machine is stopped and feeding **(A01 P1 M 01, A01 P2 M 01, A01 P2 V 01)** interrupted.

Removal mode: Current control for the press motor **(A01 A1 M 01)** is necessary. If the motor current exceeds a defined freely programmable limit value, the thin sludge pump **(A01 P1 M 01)**, coagulant agent dosing pump **(A01 P2 M 01)** and solenoid valve for secondary dilution **(A01 P2 V 01)** are stopped. The drive motor **(A01 A1 M 01)** changes to the freely programmable removal speed and the washing system solenoid valve **(A01 A1 V 01)** opens. When the motor current has

fallen again below the limit value (including hysteresis and time delay), the machine resumes its normal operation mode and feeding re-starts.
If current control actuates within a freely programmable time for a freely programmable frequency, the dewatering process is interrupted and a fault indicated.

A pressure cone inside the machine's discharge unit acts as a counter force to the dewatered sludge. The contact pressure of the pressure cone is variable by mans of a pneumatic pressure setting unit. The pneumatic actuator has a pressure controller **(A01 A1 CP 02)** integrated. When a value falls below the programmed limit (e.g. in the event of a pressure air supply failure), the dewatering process is stopped and a fault indicated.

Optional primary pressure control: To stabilize the screw press pressure, the press speed **(A01 A1 M 01)** can be adapted to the measured actual pressure **(A01 A1 CP 01)**. The press speed **(A01 A1 M 01)** is adapted within a freely adjustable pressure range, directly proportionally to the pressure.
If the pressure falls below the pressure range, the speed remains constant at a slow rotary speed. If the pressure exceeds the pressure range, the speed remains constant at a high rotary speed. The upper and lower speed are limiting the range within which the rotary speed can vary. The rotary speed rang eis directly proportional to the pressure range between the upper and lower pressure range limits.
It is necessary to dampen the actual pressure to equalize minor pressure variations that may occur.

4.6 Washing system control

A spray nozzle bar removes any sludge residues stuck in between the wedge wire bars. Cleaning takes place at the end of a dewatering cycle or in intervals, which can be varied (pause time washing system).

The start of a washing cycle has to be preselected via setting parameters. Two parameters are used:

- Washing pause time t [min]
- Washing cycle duration

Description of a complete washing cycle:
The press motor **(A01 A1 M 01)** stops, and also feeding **(A01 P1 M 01, A01 P2 M 01, A01 P2 V 01)** is stopped. The solenoid valve **(A01 A1 V 01)** opens and at the same time the press motor **(A01 A1 M 01)** starts being reversed with a fixed rotary speed of 50 Hz. The cleaning process duration must individually be adjusted to the requirements.
After expiration of the cleaning cycle the press motor **(A01 A1 M 01)** starts and feeding **(A01 P1 M 01, A01 P2 M 01, A01 P2 V 01)** starts according to the programmed starting cycle.

4.6 Termination of the dewatering process:

Termination of the dewatering process is initiated by activation of the start/stop key or an external start/stop command. The machines immediately change into cleaning mode. The cleaning cycle mode is indicated on the process operation unit or by an external lamp.

As the cleaning cycle begins, the thin sludge pump **(A01 P1 M 01)**, coagulant agent dosing pump **(A01 P2 M 01)** and solenoid valve for secondary dilution **(A01 P2 V 01)** are stopped.
The press motor **(A01 A1 M 01)** remains in operation according to the preset cleaning time. The machine performs one more washing cycle.

After the press motor **(A01 A1 M 01)** has stopped, the thick sludge removal conveyor, e.g. conveying belt **(A01 H1 M 01)**, continues to operate for a programmable time to ensure the complete removal of thickened sludge.

5. Flow diagram:

RoS 3Q Control Diagram

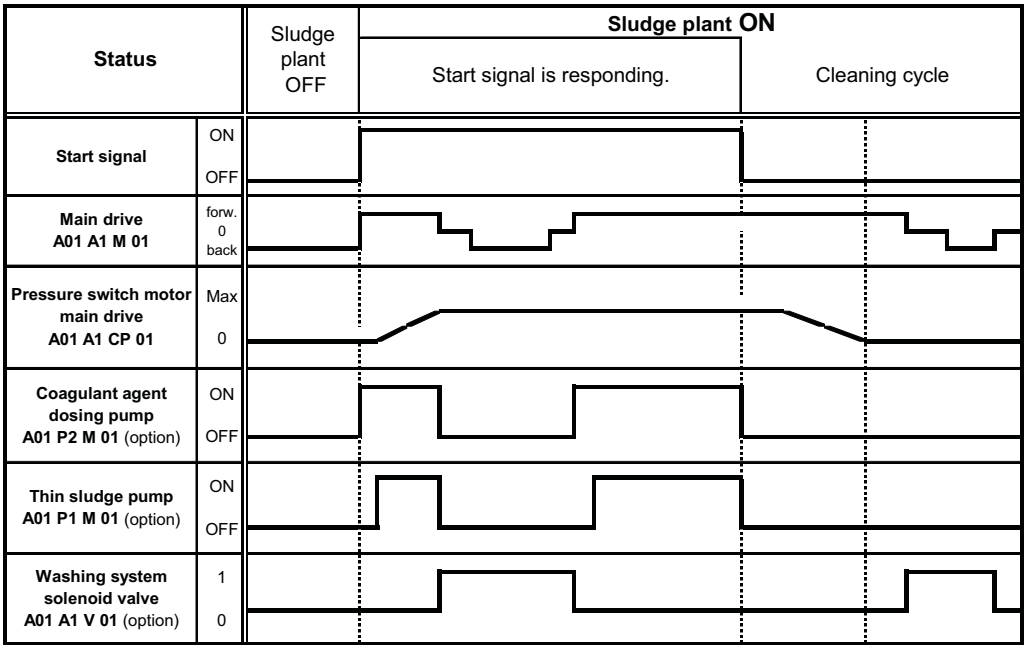

Attention: Time-shifted switch-on of drives according to functional description!

6. Setting parameters

Parameter	Setting range	Standard setting
RoS3 Q cleaning time	0 – 999,9 minutes	15,0 minutes
Washing cycle pause time:	0 – 999,9 minutes	30,0 minutes
Impulse time washing cycle	0 - 9999 seconds	60 seconds
Rotary press speed Normal operation (without primary pressure control)	0- 100%	To be adjusted to specific local conditions at the time of start-up.
Press speed in removal mode	0- 100%	100%
Current limit value Removal mode	0-999,9 A	To be adjusted to specific local conditions at the time of start-up.
Delay time current limit value Removal mode exceeded	0 - 9999 seconds	3 seconds
Current exceedance frequency	0-99	4
Current exceedance reset time	0 – 999,9 minutes	5,0 minutes
Pressure limit value press	0-9999 mBar	900 mBar
Off-time after pressure exceedance	0 - 9999 seconds	180 seconds
Pressure exceedance frequency	0-99	4
Off-time after pressure exceedance	0-999 seconds	30 seconds
Pressure exceedance reset time	0 – 999,9 minutes	5,0 minutes
Low rotary press speed Primary pressure control	0- 100%	To be adjusted to specific local conditions at the time of start-up.
High rotary press speed Primary pressure control	0- 100%	To be adjusted to specific local conditions at the time of start-up.
Lower pressure range limit	0- 1000 mbar	To be adjusted to specific local conditions at the time of start-up.
Upper pressure range limit	0- 1000 mbar	To be adjusted to specific local conditions at the time of start-up.
Time averaging pressure	0 – 99,9 seconds	2,0 seconds
Removal conveyor run-on time	0 - 9999 seconds	30 seconds

7. List of possible fault indications

A10 --- bus system --- fault
A10 --- emergency stop switch --- activated
A01 A1 CP01 --- analog signal --- pressure probe for press
A01 A1 CP01 --- press motor --- overpressure
A01 A1 M01 --- analog signal --- current value press
A01 A1 M01 --- press motor --- frequency converter
A01 H1 M01 --- belt conveyor motor --- motor protection
A01 H1 M01 --- belt conveyor motor --- full motor protection
A01 P1 CF01 --- analog signal --- thin sludge flow meter
A01 P1 CP01 --- thin sludge pump --- overpressure
A01 P1 CT01 --- thin sludge pump --- dry run protection
A01 P1 M01 --- thin sludge pump --- frequency converter
A01 P1 M01 --- thin sludge pump --- motor protection
A01 P1 M01 --- thin sludge pump --- full motor protection
A01 P2 CF01 --- analog signal --- coagulant agent flow meter
A01 P2 CF02 --- solenoid valve for secondary dilution --- flow controller
A01 P2 CP01 --- coagulant agent dosing pump --- overpressure
A01 P2 CT01 --- coagulant agent dosing pump --- dry run protection
A01 P2 M01 --- coagulant agent dosing pump --- frequency converter
A01 P2 M01 --- coagulant agent dosing pump --- motor protection
A01 P2 M01 --- coagulant agent dosing pump --- full motor protection
A01 V1 M01 --- compressor motor --- motor protection
A01 V1 M01 --- compressor motor --- underpressure

8. List of possible operating reports

A10 --- dosing plant --- not ready to dose
A10 --- no external start signal
A10 --- no control system start signal
A10 --- no touch panel activation
A10 --- cleaning cycle --- active (feed stopped)
A10 --- cleaning cycle --- completed (plant stopped)
A01 A1 CP01 --- feeding stop --- press overpressure
A01 A1 CP01 --- removal mode --- pressure of press
A01 A1 V01 --- press washing cycle --- active

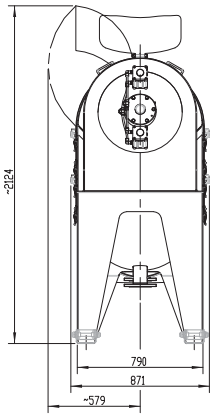

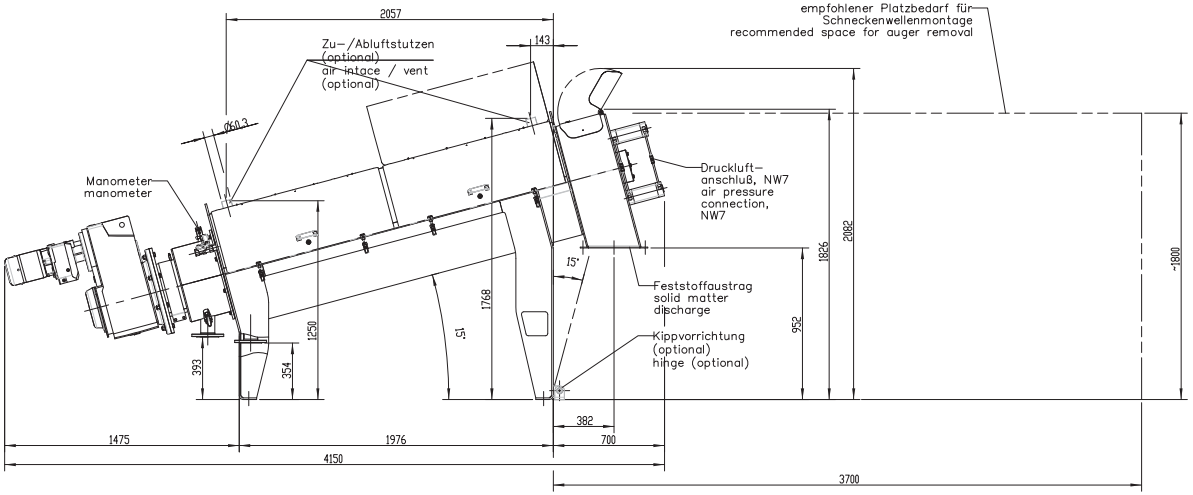

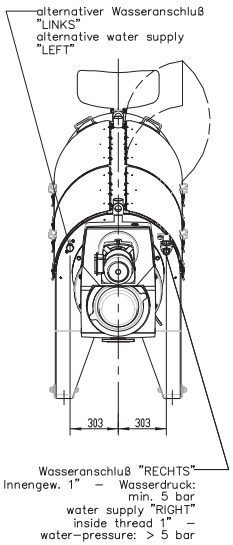

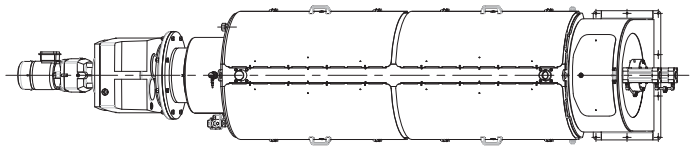

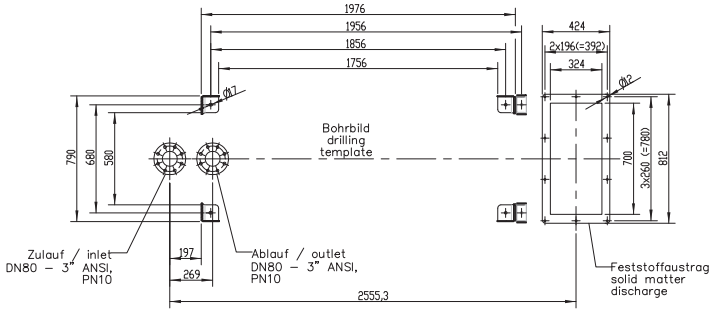

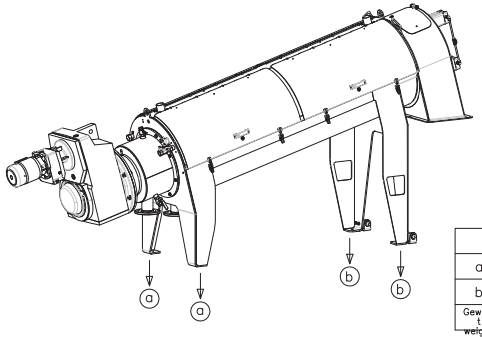

	unbefüllt empty weight	befüllt full weight
a	5,25 kN	6,0 kN
b	1,75 kN	2 kN
Gewicht weight	1400 kg	1600 kg

Pos. Item	Menge Quantity	Bezeichnung Specification	Werkstoff/Lieferant Material/Supplier	Bemerkung Annotations
–	–	----------	----------	

Diese Zeichnung ist geistiges Eigentum der Fa. Hans Huber AG Berching und damit urheberrechtlich geschuetzt. Zuwiderhandlungen verpflichten zum Schadensersatz.
This is a copyrighted drawing which is the intellectual property of Hans Huber AG.
Any contravening offender will be held liable for payment of damages

Technische Aenderungen vorbehalten / Subject to change

ISO 2768-mK

HUBER TECHNOLOGY

D-92334 Berching / Tel: +49-8462-201-0

					Datum/Date	Name
				Bear./Rev.	29.10.2009	bek
e	–	–	–	Gepr./Appr.	II	II
Revision	Aenderung Modified	Tag Date	Name	Norm.		
				Massstab/Scale:	1:20	

Massblatt RoS3 Q440

dimension sheet RoS3 Q440

Projektbez./ Project Name: –

Stand.-Art-Code Standard Item Code	Familie Family	Projekt Project	Art-Code Item Code	Blatt Sheet
	2#		010_00034	1/1

8

THE INFORMATION CONTAINED IN THIS DRAWING IS THE SOLE PROPERTY OF VELODYNE, LLC. ANY REPRODUCTION IN PART OR WHOLE WITHOUT THE WRITTEN PERMISSION OF VELODYNE, LLC IS PROHIBITED.

VeloBlend Model VM-2.5P-600-C
Dilution Water Inlet / Flow Range: 1" FNPT / 1 to 10 GPM
Polymer Inlet / Flow Range: 1" FNPT / 0.12 to 2.5 GPH
Solution Outlet: 1" FNPT

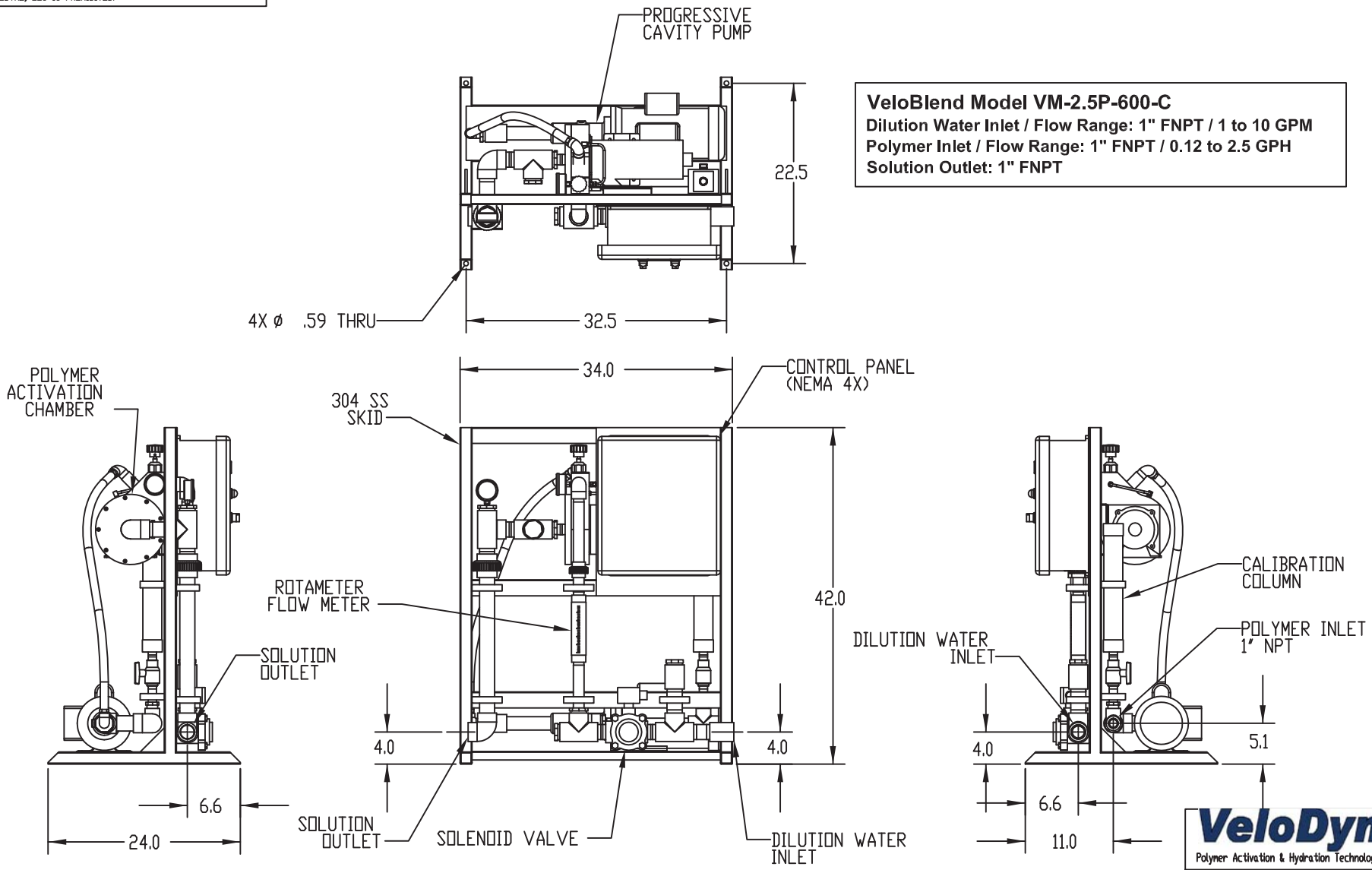

VeloDyne
Polymer Activation & Hydration Technologies

VELOBLEND LIQUID POLYMER ACTIVATION & BLENDING SYSTEM

SIZE	DWG. NO.	REV.
B	VM-P-X	A

SCALE 1:12 | DO NOT SCALE DRAWING | SHEET 2 OF

BIOSOLIDS DEWATERING

FKC screw presses provide a unique, cost effective solution for dewatering of municipal and industrial biosolids. While relatively new to this market in North America, FKC screw presses have been dewatering various non-fibrous sludges and other materials for over 20 years in a wide variety of industries.

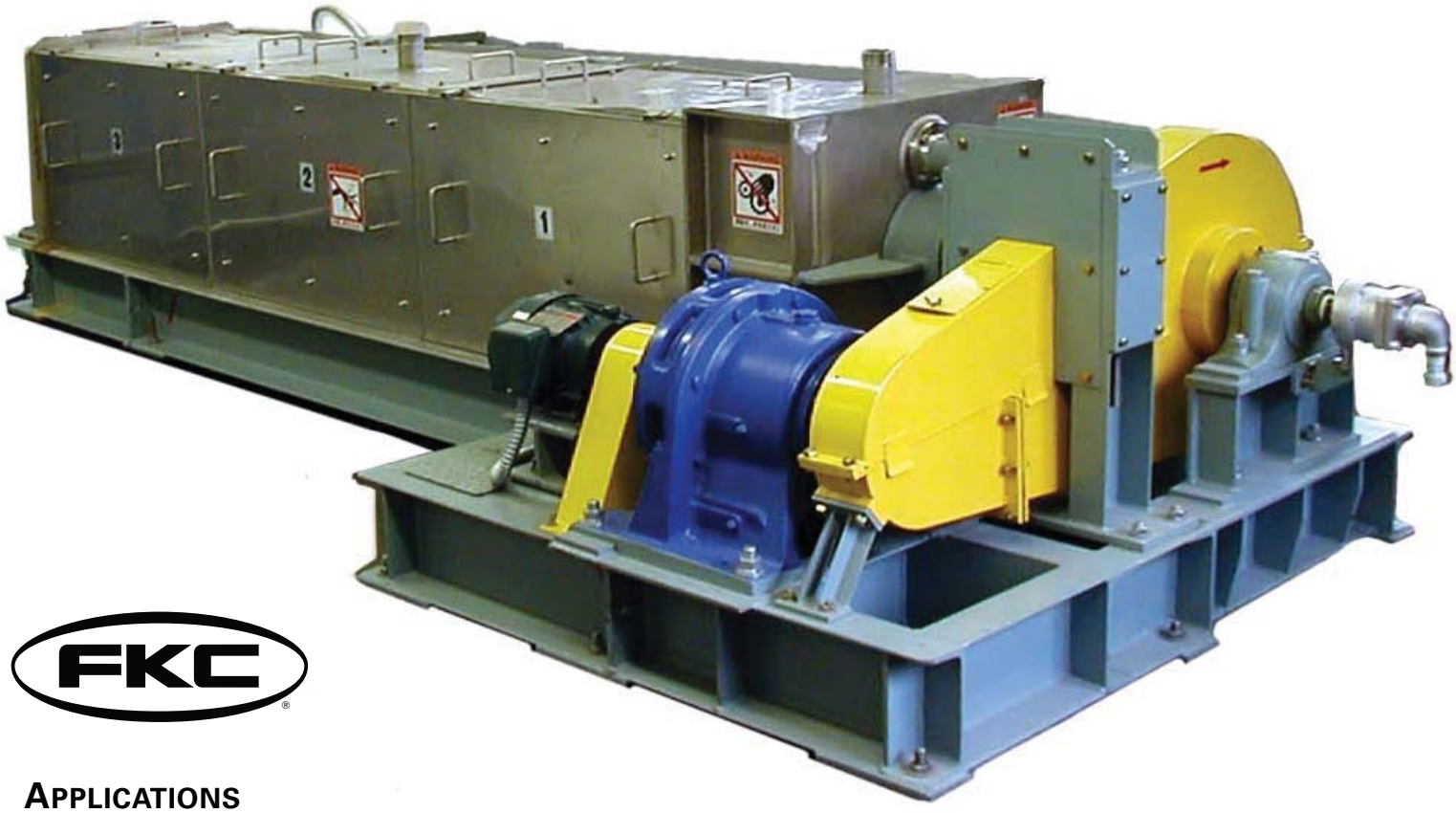

Small 12" diameter screw press installed at the City of Forks, WA

APPLICATIONS

- Municipal WWTP Sludges of All Types (Aerobically Digested, Anaerobically Digested, Raw)
- Primary, Secondary, or Mixed Sludges
- Industrial Biosolids
- Septage & Grease Trap

FEATURES OF THE FKC BIOSOLIDS DEWATERING SCREW PRESS

- Heavy Duty Construction
- High Outlet Consistency
- Slow Speed
- Few Moving Parts
- Very Low Maintenance
- Upgradeable to Produce Class A Biosolids
- Stainless Steel Wetted parts
- Low Power Consumption
- Fully Enclosed covers
- Simple, Unattended Operation
- Automated Washdown
- High Quality Construction

Two 1.25 meter diameter class A capable screw presses in Monterey, CA

Typical Sludge Dewatering Process Flow Diagram

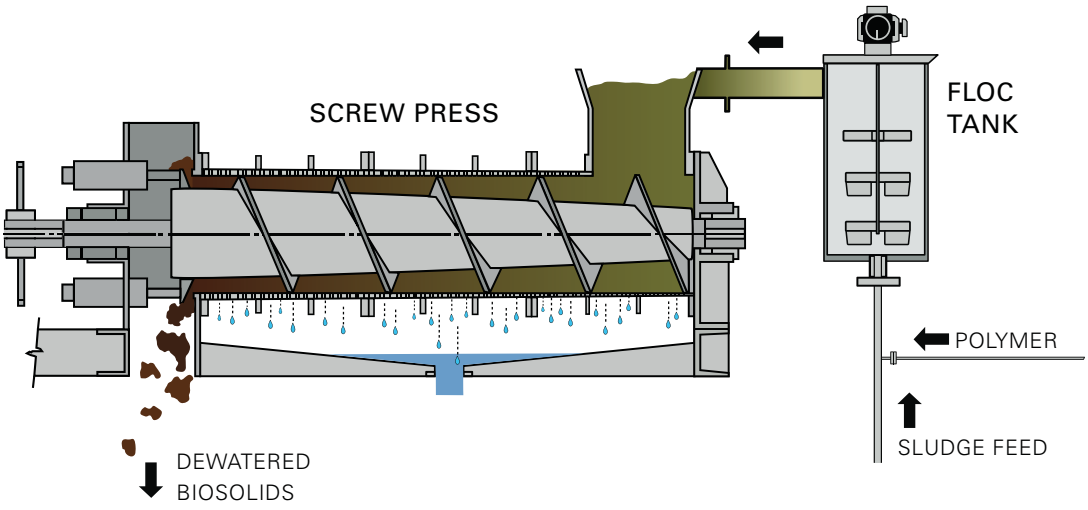

Dewatering Skid Systems for Small Applications

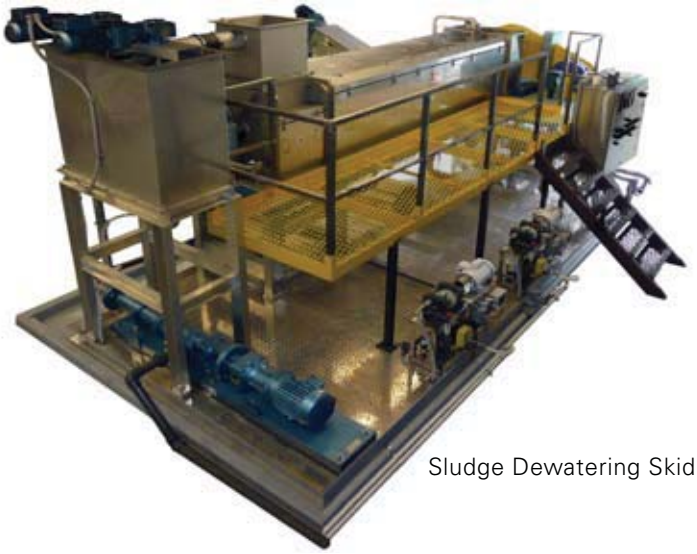

Sludge Dewatering Skid

Skid Mounted Packages

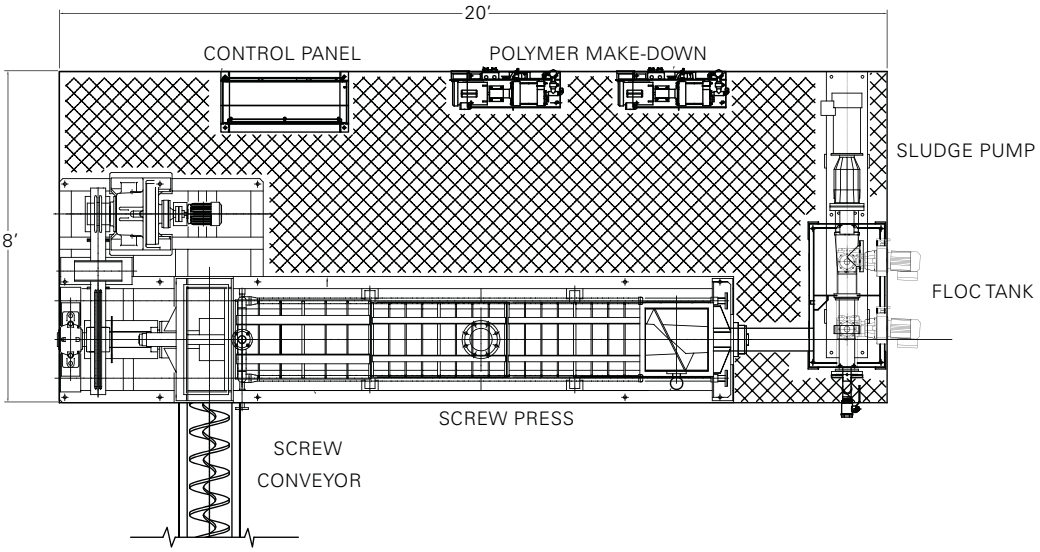

FKC Co., Ltd.
2708 W. 18th Street
Port Angles, WA 98363
(360) 452-9472
www.fkcscrewpress.com
mail@fkcscrewpress.com

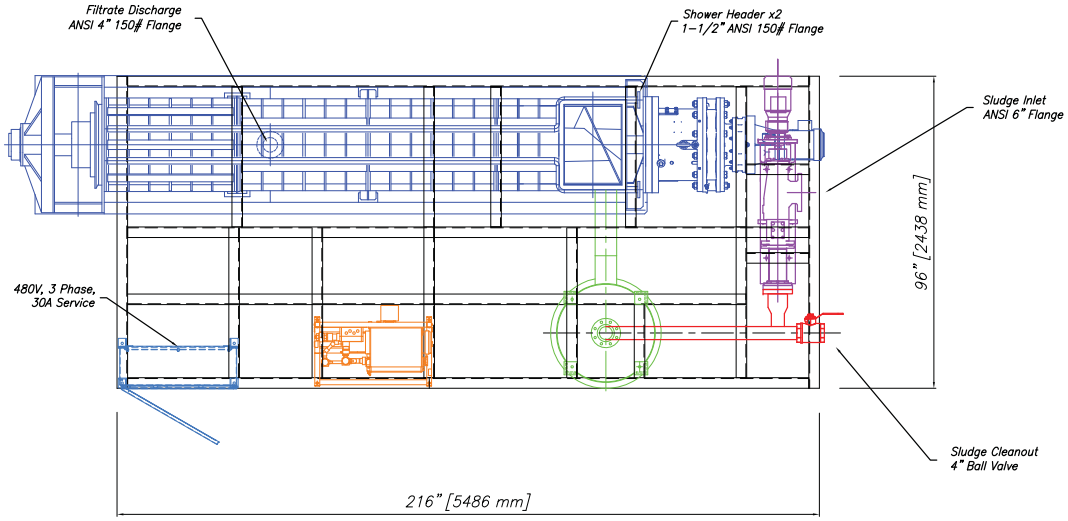

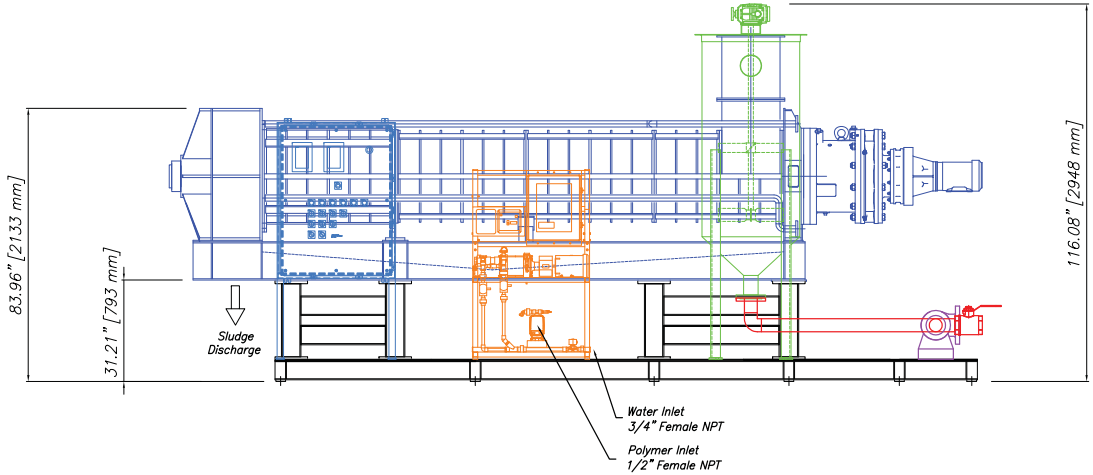

NOTE: SLUDGE CONVEYOR, POLYMER TOTE/HOSES, STAIRS/LADDERS NOT INCLUDED

符号 Mark	名称 Description	材質 Material	数量 Pcs.	重量 Weight	備考 Remarks

発注先 Purchaser		Quantity	配布先
		1	貿易部 .
最終客先 End user	REFERENCE		FKC .
		Scale	営業部 .
工事名称 Job name	SHX-600X4000L DEWATERING SKID	1/20	QC部 .
			QC ﾌｧｲﾙ .
図面名称 Dwg. name	LAYOUT		製造部 .
			設計部 .
工事番号 Job No.			釧路工場 .
			大阪営業所 .
図面番号 Dwg. No.	A600x4 grease		富士営業所 .
		Ref. job No.	合計 .

FUKOKU KOGYO CO., LTD.

Appendix I
Engineer's Opinion of Probable Construction Cost (30%)

DRAFT

DUDEK

ENGINEER'S OPINION OF PROBABLE CONSTRUCTION COST

CITY OF GUADALUPE PUBLIC WORKS DEPARTMENT
WASTEWATER TREATMENT PLANT IMPROVEMENT PROJECT

DUDEK JOB NO.: 6576
PROJECT STATUS: 30% Design
DATE: August 20, 2010

AREA/ PROCESS LOCATION	TOTAL COST
HEADWORKS	$ 503,000.00
BIOLAC SYSTEM AND BLOWERS	$ 2,119,000.00
SLUDGE HANDLING AND WAS PUMP STATION	$ 513,000.00
SITE SERVICES	$ 437,000.00
MOBILIZATION AND DEMOBILIZATION (5%)	$ 179,000.00
SUBTOTAL	$ 3,751,000.00
ALTERNATE 1 (GRIT REMOVAL SYSTEM)	$ 245,000.00
TOTAL ESTIMATED PROJECT COSTS (SUBTOTAL + ALTERNATE 1)	**$ 3,996,000.00**

CLIENT: CITY OF GUADALUPE PUBLIC WORKS DEPARTMENT	DUDEK JOB NO.: 6576 PROJECT STATUS: 30% Design			
PROJECT: WASTEWATER TREATMENT PLANT IMPROVEMENT PROJECT	BY: MDH		DATE: 8/20/2010	COMMENTS:
AREA/PROCESS LOCATION: HEADWORKS	CHK'D BY: SB		DATE CHK'D: 8/20/2010	
ITEM DESCRIPTION	EST. COST	UNIT	ESTIMATED UNIT COST	UNIT
DIVISION 2 - SITEWORK				
Remove Existing Pumps Discharge Elbows & Guide Rails	1	LS	$ 2,000.00	$ 2,000.00
Remove Discharge Piping and Valves	1	LS	$ 2,000.00	$ 2,000.00
Remove Existing Comminutor	1	LS	$ 2,000.00	$ 2,000.00
Remove Concrete Stubs	1	LS	$ 2,000.00	$ 2,000.00
DIVISION 3 - CONCRETE				
Concrete	0.5	CY	$ 1,000.00	$ 500.00
Grout	0.5	CY	$ 500.00	$ 250.00
DIVISION 5 - METALS				
Furnish and Install Steel Bar Screen Maintenance Platform	1	LS	$ 35,000.00	$ 35,000.00
Furnish and Install Steel Support Brackets for Screen and Platform	1	LS	$ 5,000.00	$ 5,000.00
Furnish and Install Aluminum Handrails	1	LS	$ 1,500.00	$ 1,500.00
Furnish and Install Steel Mounting Brackets for Washer/Compacter	1	LS	$ 1,500.00	$ 1,500.00
DIVISION 9 - FINISHES				
Painting and Coating	1	LS	$ 10,000.00	$ 10,000.00
DIVISION 11 - EQUIPMENT				
Furnish and Install Influent Screen	1	EA	$ 188,500.00	$ 188,500.00
Furnish and Install Washer/Compactor	1	EA	$ 58,500.00	$ 58,500.00
Furnish and Install Non-clog submersible pumps	3	EA	$ 20,540.00	$ 61,620.00
DIVISION 15 - MECHANICAL				
Furnish and Install 8" FLG Check Valve	2	EA	$ 2,340.00	$ 4,680.00
Furnish and Install 8" FLG DI Pipe	57	LF	$ 50.00	$ 2,850.00
Furnish and Install 8" FLG DI 90 Degree Bend	2	EA	$ 585.00	$ 1,170.00
Furnish and Install 8" x 6" FLG DI Reducer	3	EA	$ 390.00	$ 1,170.00
DIVISION 16 - ELECTRICAL				
Connect with Influent Lift Station Control Panel (ILS-CP)	1	LS	$ 4,000.00	$ 4,000.00
Install Influent Screenings Control Panel (IS-CP)	1	LS	$ 4,000.00	$ 4,000.00
Repair/Fix Lights	1	LS	$ 5,000.00	$ 5,000.00
Furnish and Install New VFD	1	EA	$ 10,000.00	$ 10,000.00
VFD Air conditioning, dust control structure	1	LS	$ 8,000.00	$ 8,000.00
DIVISION 17 - INSTRUMENTATION AND CONTROL				
Float Switches	2	EA	$ 1,000.00	$ 2,000.00
Pressure Transducers	2	EA	$ 2,000.00	$ 4,000.00
			SUBTOTAL	$ 419,240.00
			CONTINGENCY (20%)	$ 83,848.00
			TOTAL	$ 503,088.00
			TOTAL ESTIMATED COSTS	**$ 503,000.00**

DUDEK

CLIENT:	DUDEK JOB NO.: 6576			
CITY OF GUADALUPE PUBLIC WORKS DEPARTMENT	PROJECT STATUS: 30% Design			
PROJECT:	BY:		DATE:	COMMENTS:
WASTEWATER TREATMENT PLANT IMPROVEMENT PROJECT	MDH		8/20/2010	
AREA/PROCESS LOCATION:	CHK'D BY:		DATE CHK'D:	
BIOLAC SYSTEM AND BLOWERS	SB		8/20/2010	
ITEM DESCRIPTION	EST. COST	UNIT	ESTIMATED UNIT COST	UNIT
DIVISION 2 - SITE WORK				
Excavation and Fill	3,085	CY	$ 36.00	$ 111,060.00
Excavation and Export	336	CY	$ 52.00	$ 17,472.00
Anchor Posts	18	EA	$ 300.00	$ 5,400.00
DIVISION 3 - CONCRETE				
Concrete walls and slabs for clarifier	320	CY	$ 1,000.00	$ 320,000.00
Miscellaneous concrete	4	CY	$ 1,000.00	$ 4,000.00
Concrete slab for blower building	22	0	$ 1,000.00	$ 22,222.22
DIVISION 5 - METALS				
Furnish and Install Handrails	362	LF	$ 80.00	$ 28,960.00
Furnish and Install Prefabricated Building for blowers	600	SF	$ 40.00	$ 24,000.00
DIVISION 5 - WOOD AND PLASTICS				
Furnish and Install 60 mil HDPE liner	27,000	SF	$ 4.00	$ 108,000.00
Liner Pipe Penetration	4	EA	$ 500.00	$ 2,000.00
Anchor Liner to Concrete	170	LF	$ 50.00	$ 8,500.00
DIVISION 11 - EQUIPMENT				
Biolac Equipment Including Blowers	1	LS	$ 761,800.00	$ 761,800.00
DIVISION 15 - MECHANICAL				
Furnish and Install 12" FLG DI 90 Degree Bend	1	EA	$ 1,222.00	$ 1,222.00
Furnish and Install 12" MJ DI 90 Degree Bend	1	EA	$ 754.00	$ 754.00
Furnish and Install 12" MJ DI Pipe	225	LF	$ 120.00	$ 27,000.00
Furnish and Install 12"x 4" MJ DI Tee	9	EA	$ 1,000.00	$ 9,000.00
Furnish and Install 12"x 6" FLG DI Tee	3	EA	$ 1,000.00	$ 3,000.00
Furnish and Install 14" MJ DI 45 Degree Bend	3	EA	$ 1,300.00	$ 3,900.00
Furnish and Install 14" MJ DI 90 Degree Bend	2	EA	$ 1,500.00	$ 3,000.00
Furnish and Install 14" MJ DI Gate Valve	1	EA	$ 5,000.00	$ 5,000.00
Furnish and Install 14" MJ DI Tee	3	EA	$ 1,850.00	$ 5,550.00
Furnish and Install 14" PVC Pipe C900	457	LF	$ 140.00	$ 63,980.00
Furnish and Install 16" M J DI 45 Degree Bend	4	EA	$ 1,400.00	$ 5,600.00
Furnish and Install 16" MJ DI 90 Degree Bend	4	EA	$ 1,700.00	$ 6,800.00
Furnish and Install 16" MJ DI Tee	2	EA	$ 2,000.00	$ 4,000.00
Furnish and Install 16" PVC Pipe C900	1091	LF	$ 160.00	$ 174,560.00
Furnish and Install 4" FLG-MJ DI Pipe	54	LF	$ 40.00	$ 2,160.00
Furnish and Install 4" MJ DI Pipe	92	LF	$ 40.00	$ 3,680.00
Furnish and Install 4" PVC C900 Pipe	80	LF	$ 40.00	$ 3,200.00
Furnish and Install 6" FLG Dismantling Joint	3	EA	$ 1,000.00	$ 3,000.00
Furnish and Install 6" PVC SDR-35 90 Degree Bend	1	EA	$ 200.00	$ 200.00
Furnish and Install 6" PVC SDR-35 Pipe	108	LF	$ 60.00	$ 6,480.00
Furnish and Install 6" PVC SDR-35 Wye	4	EA	$ 350.00	$ 1,400.00
DIVISION 16 - ELECTRICAL				
Electrical Connections	1	LS	$ 13,000.00	$ 13,000.00
Blower Building Lighting and Receptacles	1	LS	$ 6,000.00	$ 6,000.00
			SUBTOTAL	$ 1,765,900.22
			CONTINGENCY (20%)	$ 353,180.04
			TOTAL	$ 2,119,080.27
			TOTAL ESTIMATED COSTS	**$ 2,119,000.00**

DUDEK

CLIENT: CITY OF GUADALUPE PUBLIC WORKS DEPARTMENT	DUDEK JOB NO.: 6576 PROJECT STATUS: 30% Design			
PROJECT: WASTEWATER TREATMENT PLANT IMPROVEMENT PROJECT	BY: MDH		DATE: 8/20/2010	COMMENTS:
AREA/PROCESS LOCATION: SLUDGE HANDLING AND WAS PUMP STATION	CHK'D BY: SB		DATE CHK'D: 8/20/2010	
ITEM DESCRIPTION	EST. COST	UNIT	ESTIMATED UNIT COST	UNIT
DIVISION 2 - SITE WORK				
Asphalt Driveway	150	SF	$ 3.00	$ 450.00
Connect Drain to sewer manhole	1	LS	$ 5,000.00	$ 5,000.00
DIVISION 3 - CONCRETE				
Concrete	14	CY	$ 1,000.00	$ 14,000.00
DIVISION 5 - METAL				
Prefabricated Equipment Canopy	720	SF	$ 30.00	$ 21,600.00
Pipe Supports	6	EA	$ 750.00	$ 4,500.00
DIVISION 11 - EQUIPMENT				
Furnish and Install Screw Press	1	LS	$ 297,700.00	$ 297,700.00
Furnish and Install Progressive Cavity Pump	2	LS	$ 19,500.00	$ 39,000.00
DIVISION 15 - MECHANICAL				
Furnish and Install 4" FLG DI Pipe	31	LF	$ 20.00	$ 620.00
Furnish and Install 4" FLG DI 90 Bend	8	EA	$ 195.00	$ 1,560.00
Furnish and Install 4" FLG DI Tee	3	EA	$ 300.00	$ 900.00
Furnish and Install 4" FLG DI Cross	1	EA	$ 400.00	$ 400.00
Furnish and Install 4" FLG Plug Valve	6	EA	$ 715.00	$ 4,290.00
Furnish and Install 4" PVC SDR-35 Pipe	125	EA	$ 40.00	$ 5,000.00
Furnish and Install 4" PVC SDR-35 90 Bend	2	EA	$ 150.00	$ 300.00
DIVISION 16 - ELECTRICAL				
VFD for WAS pumps	2	EA	$ 3,000.00	$ 6,000.00
Electrical System Installation	1	LS	$ 10,000.00	$ 10,000.00
DIVISION 17 - INSTRUMENTATION AND CONTROL				
Furnish and Install Magnetic Flow Meter	1	EA	$ 6,000.00	$ 6,000.00
Instrument and control installation and coordination	1	LS	$ 10,000.00	$ 10,000.00
			SUBTOTAL	$ 427,320.00
			CONTINGENCY (20%)	$ 85,464.00
			TOTAL	$ 512,784.00
			TOTAL ESTIMATED COSTS	**$ 513,000.00**

DUDEK

CLIENT: CITY OF GUADALUPE PUBLIC WORKS DEPARTMENT	DUDEK JOB NO.: 6576 PROJECT STATUS: 30% Design			
PROJECT: WASTEWATER TREATMENT PLANT IMPROVEMENT PROJECT	BY: MDH		DATE: 8/20/2010	COMMENTS:
AREA/PROCESS LOCATION: SITE SERVICES	CHK'D BY: SB		DATE CHK'D: 8/20/2010	
ITEM DESCRIPTION	EST. COST	UNIT	ESTIMATED UNIT COST	UNIT
DIVISION 2 - SITEWORK				
Gravel Driveway	40,000	SF	$ 1.50	$ 60,000.00
Misc. Sitework	1	LS	$ 20,000.00	$ 20,000.00
Erosion Control	1	LS	$ 10,000.00	$ 10,000.00
DIVISION 15 - MECHANICAL				
Plant Water pipe incl. fittings, install complete	100	LS	$ 35.00	$ 3,500.00
Plant Water Water Hose Station	2	EA	$ 500.00	$ 1,000.00
DIVISION 16 - ELECTRICAL WORK				
General Electrical (scope to develop)	1	LS	$ 270,000.00	$ 270,000.00
			SUBTOTAL	$ 364,500.00
			CONTINGENCY (20%)	$ 72,900.00
			TOTAL	$ 437,400.00
			TOTAL ESTIMATED COSTS	**$ 437,000.00**

DUDEK

CLIENT: CITY OF GUADALUPE PUBLIC WORKS DEPARTMENT	DUDEK JOB NO.: 6576 PROJECT STATUS: 30% Design			
PROJECT: WASTEWATER TREATMENT PLANT IMPROVEMENT PROJECT	BY: MDH		DATE: 8/20/2010	COMMENTS:
AREA/PROCESS LOCATION: ALTERNATE 1 (GRIT REMOVAL SYSTEM)	CHK'D BY: SB		DATE CHK'D: 8/20/2010	
ITEM DESCRIPTION	EST. COST	UNIT	ESTIMATED UNIT COST	UNIT
DIVISION 2 - SITEWORK				
Demolish Existing Grit Pump, Piping, and Valves	1	LS	$ 5,000.00	$ 5,000.00
DIVISION 3 - CONCRETE				
Concrete Slab and Pedestal for Classifier	1	CY	$ 1,000.00	$ 1,000.00
Fill existing grit suction outlet with grout	0.25	CY	$ 500.00	$ 125.00
DIVISION 3 - METALS				
Modify Existing Handrails	1	LS	$ 1,000.00	$ 1,000.00
Furnish and Install Support Bracket for Concentrator	1	LS	$ 1,000.00	$ 1,000.00
Pipe Supports	2	EA	$ 750.00	$ 1,500.00
DIVISION 11 - EQUIPMENT				
Furnish and install Pista Grit Removal System complete	1	EA	$ 182,000.00	$ 182,000.00
DIVISION 15 - MECHANICAL				
Furnish and Install 4" FLG DI Pipe	7	LF	$ 20.00	$ 140.00
Furnish and Install 4" DI Blind Flange	1	EA	$ 50.00	$ 50.00
Furnish and Install 4" FLG DI 90 Degree Bend	2	EA	$ 195.00	$ 390.00
Furnish and Install 6" FLG DI Pipe	24	LF	$ 30.00	$ 720.00
Furnish and Install 6" FLG DI 90 Degree Bend	3	EA	$ 364.00	$ 1,092.00
Furnish and Install 6" FLG DI Tee	1	EA	$ 350.00	$ 350.00
Furnish and Install 6" x 4" FLG DI Wye	1	EA	$ 350.00	$ 350.00
Furnish and Install 6" FLG DI 45 Degree Bend	1	EA	$ 292.50	$ 292.50
Furnish and Install 6" DI Blind Flange	1	EA	$ 100.00	$ 100.00
Furnish and Install 6" PVC SDR-35 Pipe	14	LF	$ 60.00	$ 840.00
Furnish and Install 6" PVC SDR-35 45 Degree Wye Saddle	1	EA	$ 300.00	$ 300.00
Furnish and Install 6" PVC SDR-35 45 Degree Bend	1	EA	$ 200.00	$ 200.00
Furnish and Install 6" PVC SDR-35 90 Degree Bend	1	EA	$ 200.00	$ 200.00
Furnish and Install 6" Neoprene Hose	4.5	LF	$ 100.00	$ 450.00
DIVISION 16 - ELECTRICAL				
Electrical Connection of Equipment	1	LS	$ 7,000.00	$ 7,000.00
			SUBTOTAL	$204,099.50
			CONTINGENCY (20%)	$ 40,819.90
			TOTAL	$244,919.40
			TOTAL ESTIMATED COSTS	**$245,000.00**

DUDEK

CITY OF GUADALUPE
WASTEWATER TREATMENT PLANT

ENGINEER'S REPORT
(TO SUPPLEMENT ROWD FORM 200)

Submitted To:
California Regional Water Quality Control Board, Central Coast Region
895 Aerovista, Suite 101
San Luis Obispo, CA 93401-7906
Contact: Sorrel Marks

Submitted by:
City of Guadalupe Wastewater Treatment Plant
918 Obispo Street
Guadalupe, CA 93434
Contact: Regan Candelario, City Administrator

October 21, 2011

CITY OF GUADALUPE
WASTEWATER TREATMENT PLANT

ENGINEER'S REPORT
(TO SUPPLEMENT ROWD FORM 200)

Submitted To:
City of Guadalupe Wastewater Treatment Plant
918 Obispo Street
Guadalupe, CA 93434
Contact: Regan Candelario, City Administrator

Prepared by:
DUDEK
605 Third Street
Encinitas, California 92024
Contact: Tom C. Falk, PE, Project Manager

October 21, 2011

TABLE OF CONTENTS

1 INTRODUCTION 1
1.1 Background 1
1.2 Purpose 3
1.3 CEQA and Public Participation 3
2 site description 4
2.1 Physical Description 4
2.2 Groundwater 5
2.3 Surface Waters 5
3 WASTEWATER TREATMENT FACILITY 5
3.1 Existing Treatment System 5
3.2 Hydraulic Capacity 6
3.3 Design Loading 6
3.4 Proposed Upgrades 7
3.5 WWTP Classification 9
3.6 Effluent Limitations 9
4 Summary 10

TABLES

Table 1 – Discharge Limitations, Existing Order No. R3-2005-0015 6
Table 2 – Wastewater Flow Rates 6
Table 3 – Influent Wastewater Characteristics 7
Table 4 – Anticipated Waste Discharge Requirements (WDR) 10

FIGURES

Figure 1 – Vicinity Map 1
Figure 2 – Location Map 1
Figure 3 – Site Layout Map 2
Figure 4 – Preliminary Process Flow Diagram 7

1 INTRODUCTION

1.1 Background

The City of Guadalupe Wastewater Treatment Plant (WWTP) is located at 5125 W. Main Street, Guadalupe, Santa Barbara County, California 93434. The facilities are located at 34° 57.738' N (latitude) and 120° 35.451' W (longitude). A vicinity, location, and site layout map are included as Figure 1, 2 and 3. The existing WWTP operates under California Regional Water Quality Control Board (RWQCB), Region 3 Central Coast Region Board Order No. R3-2005-0015.

Figure 1 – Vicinity Map

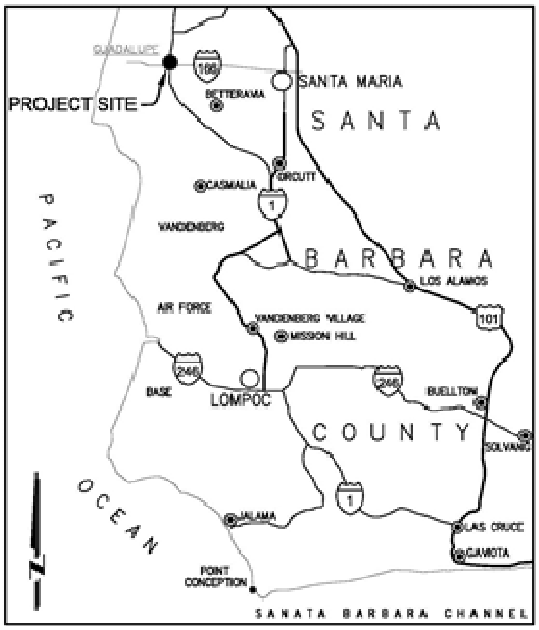

Figure 2 – Location Map

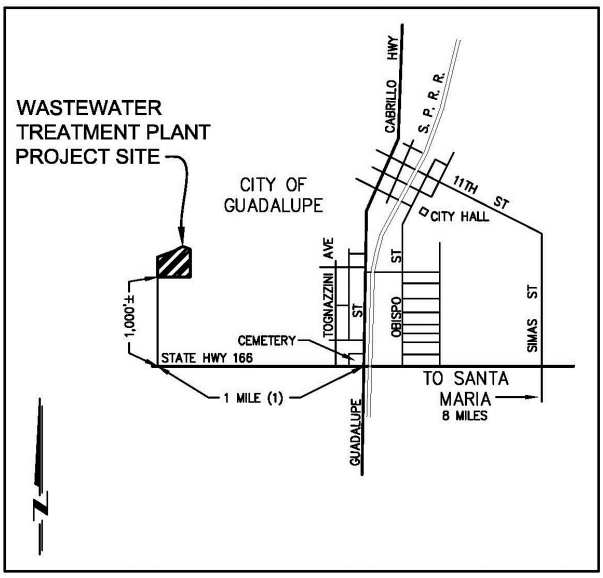

Figure 3 – Site Layout

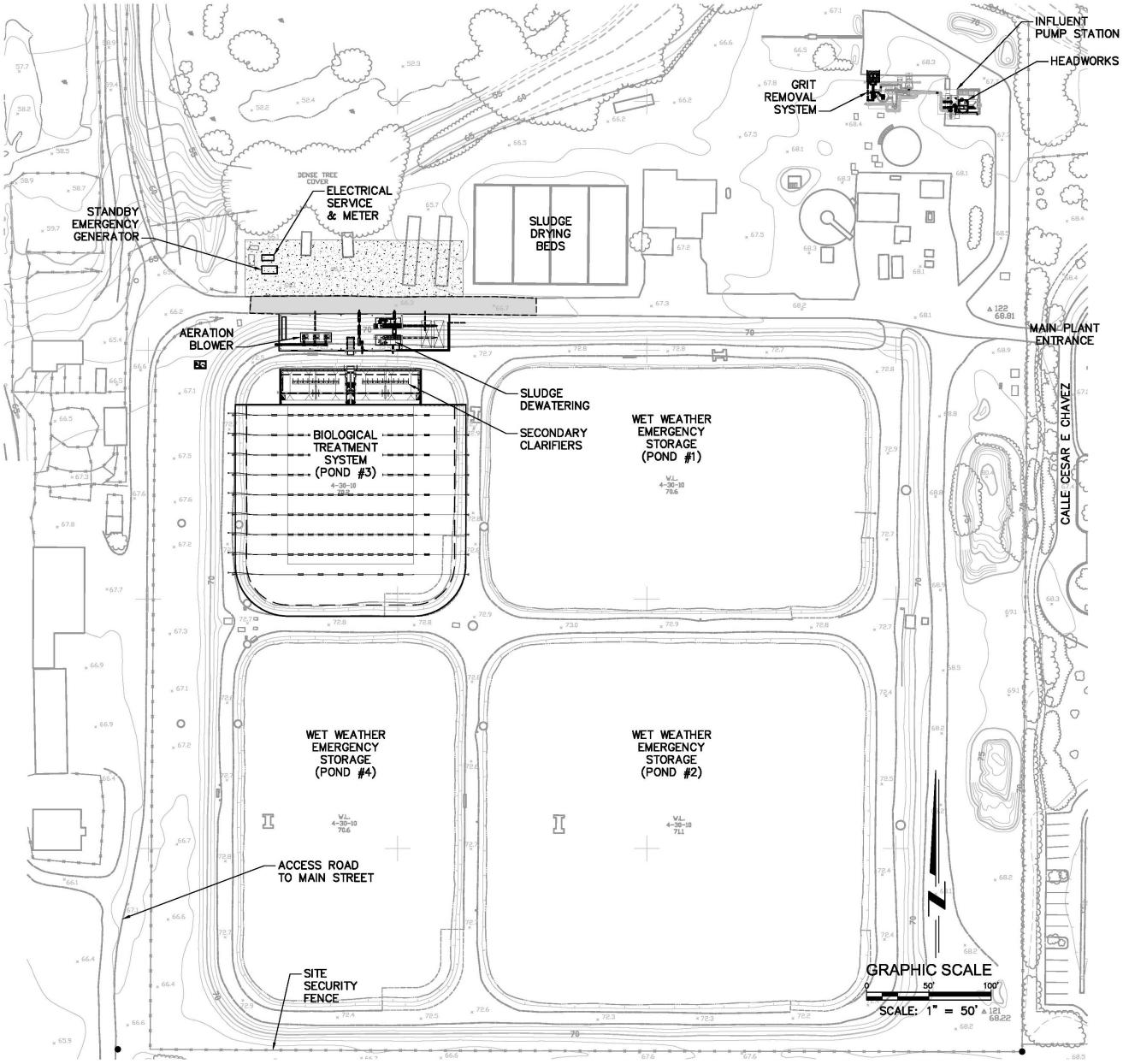

The City of Guadalupe WWTP serves a population of more than 6,500. Agricultural land borders the WWTP to the west; a City park borders the WWTP site to the south; residential development borders the WWTP site to the east; and the Santa Maria River is approximately 1,000 feet north of the plant, separated by an agricultural zone buffer.

The WWTP has been upgraded several times over the last 50 years, notably:

- 1960's: conventional treatment system was constructed consisting of headworks, aeration basin, clarifiers, anaerobic digesters, sludge drying beds, and percolation ponds
- 1979: Certain facilities were refurbished and upgraded, the aeration basin was demolished, digesters abandoned and headworks, lagoons, spray distribution system, and offsite holding ponds were newly constructed
- 1992: New headworks, grit removal system, sludge drying beds, irrigation pump station and spray distribution system were constructed
- 2004: Lagoons converted to Advanced Integrated Pond System (AIPS) including expansion of onsite treatment pond volume, and abandonment of sludge drying beds

In 2008, the Santa Barbara County Water Agency was awarded $25 million for 14 Integrated Regional Water Management (IRWM), region-wide projects in a competitive grant process funded by Proposition 50. The City of Guadalupe was awarded $4.75 million for upgrades to the existing 0.96 million gallon per day WWTP. This Engineer's Report describes the WWTP upgrades funded by the Proposition 50 Grant and necessitating new WDRs.

1.2 Purpose

The purpose of this Engineer's Report is to reissue new Waste Discharge Requirements (WDR) for the City of Guadalupe WWTP. With these new WDRs, the City intends to continue discharge of treated domestic wastewater by spray irrigation to pastureland. This Engineer's Report accompanies the Application/Report of Waste Discharge (ROWD), United States Environmental Protection Agency (USEPA) Form 200 pursuant to California Water Code Section 13260. This report details the proposed WWTP upgrades, method of treatment, discharge of waste and disposal for the WWTP.

1.3 CEQA and Public Participation

On October 26, 2010 the City of Guadalupe filed a Notice of Exemption (NOE) for the WWTP upgrade project as a Categorical Exemption Class 1. The Project was found to be categorically exempt under Section 15301 of the California Environmental Quality Act

(CEQA) guidelines because the operation, repair, maintenance, permitting, or minor alteration of existing public structures, facilities, or mechanical equipment, involving negligible or no expansion of use beyond that of the existing plant. The improvements at the WWTP involve facility maintenance and equipment replacement activities that do not add to the capacity of the existing plant.

In conjunction with the Proposition 50 funding, the State Water Board Staff has determined that the project also qualifies for the following Categorical Exemptions to CEQA requirements: Class 1 "Minor alteration of existing public structure…(e) Additions to existing structures…" Class 2 "(c) Replacement or reconstruction of existing utility systems…"

The City's Notice of Exemption and the SWRCB's Project CEQA Administrative Staff Report are included in Appendix A of this Engineer's Report.

2 SITE DESCRIPTION

2.1 Physical Description

The WWTP property is irregular in shape, relatively level, and has an average elevation of 63 feet above mean sea level (MSL). The City's property is approximately 12.6 acres in size. The existing improvements on the site consume nearly the entire property. The property is fenced and is accessible only by entrances at the northwest corner via an unpaved access road from West Main Street (SR166) and at the northeast corner via City-maintained road, Calle Cesar E. Chavez.

The WWTP is located approximately 3.5 miles from the coast and experiences arid coastal climate year round. The site receives an average of 13 inches of rain per year.[1]

GSI Soils, Inc. performed a geotechnical study on the WWTP site in March of 2011. They concluded, "The site is suitable for the proposed improvements." Exploratory borings were completed to support design development. The geotechnical investigation findings are summarized as follows:

- At the clarifier site location, fill soils were encountered at a depth of 10 feet, which consisted of sandy silty clays over silts and were in a moist state, but firm to stiff condition. Below the fills, clayey silts in a moist state and in a firm to stiff condition were found to a depth of 20 feet below the top of the berm (73 feet above MSL). Sandy silts in a very moist to saturated state were found below a depth of 20 feet.

[1] Weather Reports, www.weatherreports.com.

- Free groundwater was encountered in the exploratory borings at approximately 50 feet above MSL (15-ft below ground surface elevation).

2.2 Groundwater

The City's existing Board Order No. R3-2005-0015[1] includes the following description of the spray irrigation disposal site:

> *The vicinity of the discharge is characterized by fairly level topography consisting of sandy soils overlying poor quality shallow ground water. Depth to ground water ranges from two to eight feet below the ground surface. Based on monitoring data provided by the Discharger [City of Guadalupe], the underlying shallow ground water includes the following characteristics:*

Total Dissolved Solids	*1600 mg/l*
Sodium	*260 mg/l*
Chloride	*270 mg/l*
Nitrate (as N)	*0.2 mg/l*

As the proposed new ROWD does not modify the disposal method and improves the effluent quality, further groundwater quality analysis was not necessary for this Engineer's Report.

2.3 Surface Waters

The City's existing Board Order No. R3-2005-0015[2] includes the following description of the Watershed and Surface Waters:

> *The Santa Maria River flows in a westerly direction between the treatment plant and the effluent storage pond on the south bank and the disposal fields on the north bank.*

The proposed new ROWD does not modify the disposal method.

3 WASTEWATER TREATMENT FACILITY

3.1 Existing Treatment System

The City of Guadalupe Wastewater Treatment Plant currently treat wastewater to an "equivalent to secondary effluent" level with discharge limitations described in Table 1

[1] Waste Discharge/Recycled Water Requirements Order No. R3-2005-0015 (Waste Discharger Identification No. 3 420103001) for City of Guadalupe Wastewater Facility, 2005 (Paragraph 5).

[2] Waste Discharge/Recycled Water Requirements Order No. R3-2005-0015 (Waste Discharger Identification No. 3 420103001) for City of Guadalupe Wastewater Facility, 2005 (Paragraph 6).

pursuant to water quality objectives of the Basin Plan. The WWTP currently consists of headworks that includes a comminutor, bypass manual bar rack, and an influent pump station. Raw influent wastewater is pumped into a vortex grit chamber; a forcemain bypass can be used to pump directly to the downstream process. Wastewater is biologically treated in the AIPS and treated effluent is conveyed through an open ditch to the effluent storage ponds (nominal capacity of 10.5 million gallons) from which it is pumped by the irrigation pump station to the spray distribution system on the north side of the Santa Maria River for disposal to 71 acre irrigation plot used as pasture land.

Table 1 – Discharge Limitations, Existing Order No. R3-2005-0015

Constituent	Units	Monthly (30-day) Average	Daily Maximum
Settleable Solids	mL/L	0.2	0.5
BOD, 5-Day	mg/L	60	100
Suspended Solids	mg/L	60	100
Total Dissolved Solids	mg/L	1500	--
Sodium	mg/L	230	--
Chloride	mg/L	1230	--
pH	--	Within the range 6.5 – 8.4	

3.2 Hydraulic Capacity

The WWTP does not have a means to record instantaneous influent flowrate throughout the day, so diurnal flow data is not available. The influent flowmeter does provide daily totalized flow. Maximum day and peak hour flows are assumed based on previous facility design criteria.

Table 2 summarizes the design capacity of the WWTP. The WWTP is designed for an annual average daily flow (ADF) of 0.96 mgd.

Table 2 – Wastewater Flow Rates

Flow Condition	Units	Value (Current)	Value (Current)
Average Daily Flow (ADF)	mgd	0.6	0.96
Maximum Daily Flow (MDF)	mgd	1.04	1.66
Peak Hour Flow (PHF)	mgd	1.92	2.88
Minimum Daily Flow (MiDF)	mgd	0.18	0.48

3.3 Design Loading

Wastewater processed at the City of Guadalupe WWTP is characteristic of typical domestic sewage. The flow tributary to the WWTP is produced primarily from domestic uses. A single local vegetable packing facility discharges to the sewer; however, reportedly, the industrial discharger maintains onsite pretreatment and the discharge to the City's sewer system is consistent with domestic wastewater loading.

The City of Guadalupe WWTP samples raw influent wastewater on a weekly basis. Additional sampling was performed during the design development stages to confirm project design criteria. The influent loading is presented in Table 3.

Table 3 – Influent Wastewater Characteristics

Constituent	Units	Value (max, min)
5-Day Biological Oxygen Demand (BOD5)	mg/L	300
Total Suspended Solids (TSS)	mg/L	300
Ammonia (NH_3)	mg/L	35 (35, 28)
Total Kjeldahl Nitrogen (TKN)	mg/L	50 (65, unknown)
Alkalinity	mg/L	230-250
pH	--	7.7

3.4 Proposed Upgrades

The WWTP is designed to treat 0.96 million gallons per day (mgd) of domestic sewage on an annual average daily flow basis with peaking factors indicated in Table 2, above. The headworks and grit chamber structures were determined to be serviceable and will remain in use through this proposed upgrades project. Only equipment upgrades at the headworks will be accomplished. The existing AIPS ponds will be re-purposed – Pond #3 will be converted to an extended aeration activated sludge process (Biolac®) and Ponds #1, #2, #4 will be maintained for additional onsite wet weather storage.

A process flow diagram for the proposed new WWTP process is provided in Figure 4.

Figure 4 – Process Flow Diagram

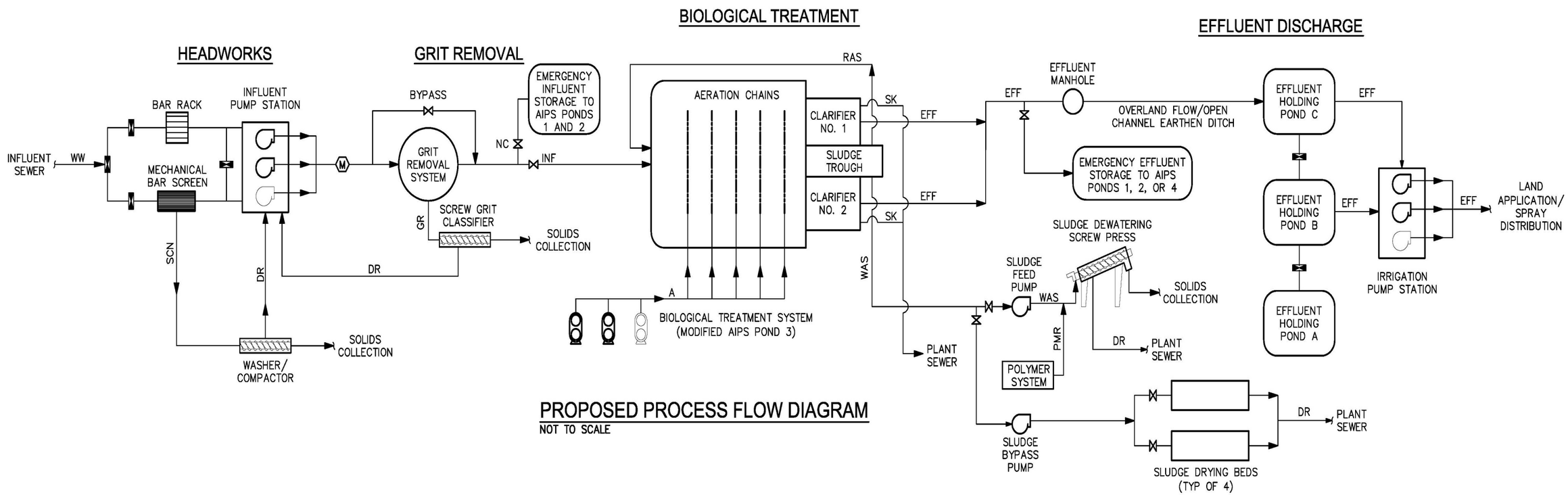

The following WWTP improvements are proposed:

- Headworks: The comminutor will be removed and disposed of. A mechanically cleaned bar screen (aperture of 6mm) will be installed in its place. The screenings collected by the bar screen will be lifted to an automatic wash/press at grade. The wash/press will clean, press, and discharge the dewatered screenings into a haul-away dumpster.
- Biological Process: Existing AIPS Pond #3 will be converted to an extended aeration, activated sludge system utilizing the Biolac® process. Pond #3 will be reshaped and diffusers will be added to provide diffused aeration and mixing. Two parallel secondary clarifiers will be constructed integral to the Biolac® system. Blowers will be installed to deliver compressed air to the diffuser chains for biological aeration and biomass mixing.
- Sludge Dewatering: Sludge handling facilities will be constructed and will include Waste Activated Sludge (WAS) pumps and a sludge dewatering screw press. The existing sludge drying beds will be cleaned and refurbished so they can be used as backup to the mechanical dewatering system. The process is anticipated to generate approximately 36 tons/week of dewatered biosolids at 16 to 20 percent solids when the WWTP is operating at its full design capacity.
- Disposal: The WWTP will continue to dispose of treated effluent by spray irrigation onto the 71 acre irrigation field. Abandonment of existing AIPS Ponds #1, #2, #3 will provide for additional onsite wet weather emergency storage.

3.5 WWTP Classification

When the upgrades are completed, the WWTP will consist of an extended aeration, activated sludge process with a rated capacity of 0.96 mgd. The plant classification will be determined by the Office of Operator Certification (OOC). Extended aeration, activated sludge less than 1.0 mgd is expected to be classified as a Class II facility requiring a minimum Grade II State Certified Wastewater Treatment Plant Operator to function as the Chief Plant Operator (CPO). The CPO as defined by California Code of Regulations, Title 23, Section 3671(h) is responsible for managing and supervising the operations and maintenance of the treatment and disposal system. Aside from CPO certification, the OOC does not stipulate the number of staff required to operate and maintain a facility.

3.6 Effluent Limitations

The proposed improvements provide improved level of treatment over the current AIPS. Effluent produced at the upgraded WWTP will be discharged in a similar manner as the

current process and therefore must comply with comparable Basin Plan, Title 22, and California Water Code requirements.

Based on review of the proposed WWTP upgrades, the proposed biological process capabilities, and typical secondary effluent WDR requirements permitted by the California Regional Water Quality Control Board, Central Coast Region the anticipated WDR limitations for the Guadalupe WWTP are presented in Table 4.

Table 4 – Anticipated Waste Discharge Requirements (WDR)

Constituent	Units	Monthly (30-day) Average	Daily Maximum
BOD, 5-Day	mg/L	30	45
Suspended Solids (TSS)	mg/L	30	45
Sodium	mg/L	230	--
TDS	mg/L	1500	--
Chloride	mg/L	230	--
pH	6.5 – 8.4		

4 SUMMARY

Based on evaluation of the existing flow data, the WWTP is designed and operated to meet the following parameters:

- The WWTP shall be designed to process hydraulic loads including an annual Average Daily Flow of 0.96 mgd with a Peak Hour Flow of 2.88 mgd.
- The WWTP shall be designed for an influent loading of: BOD5 of 300 mg/L, a TSS of 300 mg/L, Ammonia of 35 mg/L, a TKN of 50 mg/L, and Alkalinity of 250 mg/L.
- The WWTP shall be designed to not exceed a daily effluent limitations of: BOD and TSS of 30 mg/L and 45 mg/L on an 30-Day Monthly Average and Daily Maximum, respectively. Additionally, the facility will maintain compliance with current Sodium, TDS, and Chloride limitations of 230 mg/L, 1,500 mg/L, and 230 mg/L, respectively. Treated effluent will be discharged with a pH in the range of 6.5 to 8.4.
- Treatment and discharge shall not cause pollution or nuisance as defined in Section 13050 of the California Water Code.
- Proper fences, signage, and other acceptable alternatives shall be used to prohibit public access to the wastewater treatment facility and the disposal areas.

APPENDIX A

CEQA DOCUMENTS

CITY OF GUADALUPE, CALIFORNIA

NOTICE OF EXEMPTION
GUADALUPE WASTEWATER TREATMENT PLANT IMPROVEMENT PROJECT CONDITIONAL USE PERMIT

2010 OCT 26 AM 8:05
COUNTY OF SANTA BARBARA
CLERK OF THE
BOARD OF SUPERVISORS

TO: Clerk of the Board
County of Santa Barbara
105 E. Anapamu St., Rm. 407
Santa Barbara, CA 93101

FROM: City of Guadalupe
918 Obispo Street
Guadalupe, CA 93434

PROJECT TITLE AND DESCRIPTION

Guadalupe Wastewater Treatment Plant Improvement Project Conditional Use Permit
5125 W. Main Street, Guadalupe, CA 93434
APN: 113-030-021
Case No. 2010-011-CUP

The City has proposed making improvements to the Guadalupe Wastewater Treatment Plant (WWTP). Improvements are to the existing facility and consist of: an upgrade to the headworks, conversion of current pond system to an extended aeration design, new sludge handling facilities, an upgrade to the existing irrigation pump station, dredging the existing ponds and disposal of solids, and miscellaneous site work. The access road to the facility will also be repaved to provide an improved, all-weather access to the plant. These improvements do not increase the capacity to the existing WWTP above permitted levels. The improvements are needed to address regulatory requirements of the Regional Water Quality Control Board (RWQCB) for the plant's waste discharge requirements. The current plant has a design capacity of 0.96 MGD, which is adequate to meet the needs of the City's projected growth for the next 20 years.

FINDING

The Planning Department of the City of Guadalupe has reviewed the above proposed project and found it to be exempt from the provisions of the California Environmental Quality Act (CEQA).

- ☐ Ministerial Project
- ☒ Categorical Exemption [CEQA Guidelines, Section 15301]
- ☐ Statutory Exemption
- ☐ Emergency Project
- ☐ Disapproval [CEQA Guidelines, Section 15270]
- ☐ No Possibility of Significant Effect [CEQA Guidelines, Section 15061(b)(3)]

SUPPORTING REASONS

The proposed project may be found categorically exempt under Section 15301 of the State Guidelines for the Implementation of the California Environmental Quality Act. Section 15301 includes projects characterized as existing facilities. This section states that the operation, repair, maintenance, permitting, or minor alteration of existing public structures, facilities, or mechanical equipment, involving negligible or no expansion of use beyond that existing at the time of the lead agency's determination shall be exempt from the provisions of CEQA.

As mentioned, the proposed improvements to the Guadalupe WWTP involve facility maintenance and equipment replacement activities that do not add capacity to the existing WWTP. Miscellaneous site work would include replacement of the existing standby emergency generator and 300 gallon, above ground diesel fuel tank. The existing standby emergency generator and associated fuel tank would be replaced with a new generator. The new fuel tank would have a capacity of approximately 300-400 gallons, with sub-base and double-walled fuel storage tank with leak detection. These improvements would meet APCD and Fire Department requirements and standards, and the new diesel fuel tank would be sub-base, double wall with fuel leak detection and of similar capacity.

Since 2005, the WWTP has not consistently met the plant's Waste Discharge Requirements (WDR). Project improvements and maintenance to the existing facility are proposed to protect the health and safety of the operators and the general public in the City of Guadalupe. In bringing the WWTP into compliance with WDR, the project would address potential health risks of exposure of humans and cattle to under treated wastewater. The project would also address potential impacts to long-term groundwater quality associated with the underlying groundwater basin. The project site is not located in an area subject to significant geologic, flood, fire hazards, or bluff stability issues. Therefore, the project complies with the requirements listed above and is exempt from the California Environmental Quality Act under Section 15301 of the CEQA Guidelines.

Robert Mullane City Planner	(805) 547-0900 Phone	10/21/10 Date

CEQA Administrative Staff Report[1]
State Water Board Funding Decisions
State Funding Only

Funding Sources (check all that apply
2005-06 Consolidated Grants ☐ 2007-08 CWA 319 ☐ **IRWMP** ☒ County of Santa Barbara
Other ☐ → Identify:

Grant Agreement No(s): **08-613-550 (C05)**
Grantee: Regional Santa Barbara County Water Agency (Agency)
Sub-grantee (if applicable): City of Guadalupe
Lead Agency: City of Guadalupe (City)
Project Name: City of Guadalupe WWTP Improvement Project C-5 (Project)
Project Location: Santa Barbara County, Guadalupe, California

Purpose of Project:

To make improvements to the Guadalupe Wastewater Treatment Plant (WWTP). The improvements will address the regulatory requirements of the Central Coast Regional Water Quality Control Board for the plant's waste discharge requirements.

Project Description:

The following improvements will be made to the existing facility: Upgrade the headworks, convert the current pond system to an extended aeration design, construct new sludge handling facilities, upgrade the existing irrigation pump station, dredge the existing ponds and dispose of solids, and replace the existing stand-by emergency generator and 300 gallon above-ground diesel fuel tank. The access road to the facility will also be repaved to provide an improved, all-weather access to the plant. These improvements do not increase the capacity to the existing WWTP above permitted levels. The current plant has a design capacity of 0.96 million gallons per day, which is adequate to meet the needs of the City's projected growth for the next 20 years.

Additional Information:

- The City is the lead agency under CEQA.
- The City filed the NOE on October 26, 2010, as a Categorical Exemption Class 1. However, State Water Board Staff has determined that the Project qualifies for the following Categorical Exemptions to CEQA requirements: Class 1 "Minor alteration of existing public structure… (e) Additions to existing structures…" Class 2 "(c) Replacement or reconstruction of existing utility systems…"

Concurrence that no significant adverse water quality impacts will result from Project:
Yes ☒ No ☐

Type of CEQA document: NOE ☒ IS/ND ☐ IS/MND ☐ EIR ☐ EIR/EIS ☐ EIR/EA ☐
Exemptions used (if applicable): 15301 and 15302
Date NOE or NOD filed with OPR: April 15, 2011

[1] For executed grant agreements

FINDINGS:

1. The City is the lead agency under CEQA for the Project. The City filed an NOE with the Santa Barbara County Clerk on October 26, 2011, and OPR on April 15, 2011.
2. State Water Board staff have reviewed the environmental information and determined that the Project qualifies for Class 1 and 2 Categorical Exemptions from CEQA requirements and will not result in any significant adverse water quality impacts.
3. Other components under the IRWM Grant Agreement will require a separate environmental review on a project-by-project basis once the applicable CEQA documents have been received.

James Maughan, Acting Deputy Director
Division of Financial Assistance

6/7/11
Date

cc: Kelley List, Division of Financial Assistance
Carolyn Saputo, Division of Financial Assistance
Lisa Lee, Division of Financial Assistance

2011 Annual Report of Hydrogeologic Conditions, Water Requirements, Supplies and Disposition

Santa Maria Valley Management Area

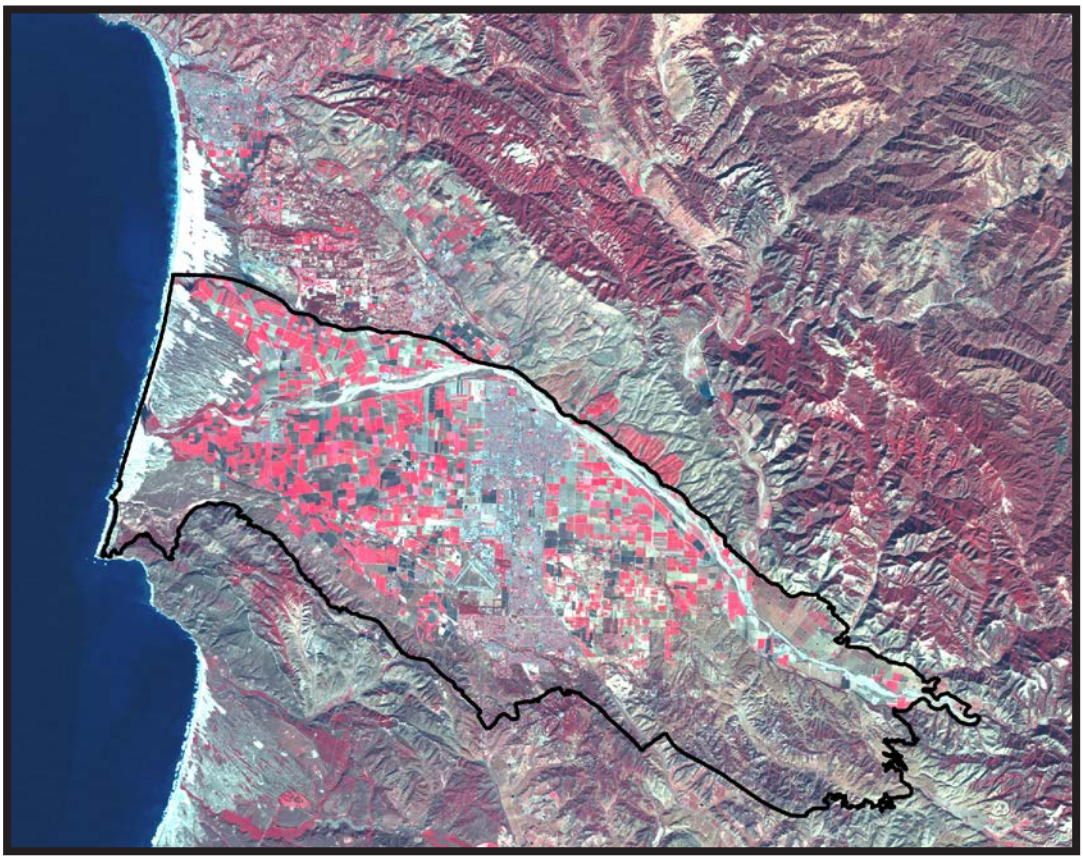

Luhdorff and Scalmanini
Consulting Engineers

April, 2012

2011 Annual Report of Hydrogeologic Conditions
Water Requirements, Supplies, and Disposition

Santa Maria Valley Management Area

prepared by

Luhdorff and Scalmanini
Consulting Engineers

April, 2012

Table of Contents

Page

1. Introduction 1
1.1 Physical Setting 1
1.2 Previous Studies 2
1.3 SMVMA Monitoring Program 2
1.4 Report Organization 4

2. Hydrogeologic Conditions 5
2.1 Groundwater Conditions 5
2.1.1 Geology and Aquifer System 5
2.1.2 Groundwater Levels 8
2.1.3 Groundwater Quality 10
2.2 Twitchell Reservoir Operations 12
2.2.1 Reservoir Stage and Storage 12
2.2.2 Reservoir Releases 13
2.2.3 Instream Steelhead Fisheries Study 14
2.3 Streams 16
2.3.1 Discharge 16
2.3.2 Surface Water Quality 18
2.4 Climate 20
2.4.1 Precipitation 20
2.4.2 Evapotranspiration 21

3. Water Requirements and Water Supplies 22
3.1 Agricultural Water Requirements and Supplies 22
3.1.1 Land Use 22
3.1.2 Applied Crop Water Requirements 23
3.1.3 Total Agricultural Water Requirements 24
3.1.4 Agricultural Groundwater Pumping 25
3.2 Municipal Water Requirements and Supplies 25
3.2.1 Municipal Groundwater Pumping 25
3.2.2 Imported Water 26
3.2.3 Total Municipal Water Requirements 27
3.3 Total Water Requirements and Supplies 27

4. Water Disposition 29
4.1 Agricultural Return Flows 29
4.2 Treated Municipal Waste Water Discharge 30
4.3 Exported Water 32

5. Conclusions and Recommendations 36
5.1 Conclusions 36
5.2 Recommendations 39

Table of Contents, cont.

Page

6. References 43

Appendices

Appendix A SMVMA Monitoring Program
Appendix B 2011 Land Use Interpretation Data and Image Inventory
Appendix C Historical Groundwater Quality, Coastal Wells 10N/36W-02Q1, 3, 4, and 7
Appendix D Historical Return Flows from Waste Water Treatment Plants

List of Figures

1.1-1 Santa Maria Valley Groundwater Basin and Management Area

1.3-1a Well Network for Monitoring Shallow Groundwater
1.3-1b Well Network for Monitoring Deep Groundwater
1.3-2 Surface Water and Climatic Monitoring Network

2.1-1a Generalized Geologic Map with Cross Section Locations
2.1-1b Longitudinal Geologic Cross Section, A-A'
2.1-1c Transverse Geologic Cross Section, B-B'
2.1-2 Historical Groundwater Levels
2.1-3a Contours of Equal Groundwater Elevation, Shallow Zone, Early Spring 2011
2.1-3b Contours of Equal Groundwater Elevation, Shallow Zone, Late Spring 2011
2.1-3c Contours of Equal Groundwater Elevation, Shallow Zone, Fall 2011
2.1-3d Contours of Equal Groundwater Elevation, Deep Zone, Early Spring 2011
2.1-3e Contours of Equal Groundwater Elevation, Deep Zone, Late Spring 2011
2.1-3f Contours of Equal Groundwater Elevation, Deep Zone, Fall 2011
2.1-4 Historical Groundwater Quality

2.2-1a Historical Stage and Storage, Twitchell Reservoir
2.2-1b Historical Releases, Twitchell Reservoir

2.3-1a Historical Surface Water Discharge, Cuyama River and Twitchell Reservoir
2.3-1b Historical Stream Discharge, Sisquoc River
2.3-1c Historical Stream Discharge, Santa Maria River
2.3-1d Historical Stream Discharge, Orcutt Creek
2.3-2a Historical Surface Water Quality, Sisquoc River
2.3-2b Historical Surface Water Quality, Orcutt Creek

2.4-1 Historical Precipitation, Santa Maria Airport
2.4-2 Historical Reference Evapotranspiration, CIMIS Stations

3.1-1a Agricultural Land Use, 2011
3.1-1b Historical Distribution of Irrigated Acreage, by Crop Category
3.1-1c Historical Agricultural Acreage and Groundwater Pumpage

3.2-1a Historical Municipal Groundwater Pumpage
3.2-1b Historical State Water Project Water Deliveries
3.2-1c Historical Municipal Water Requirements

3.3-1 Historical Total Water Requirements

List of Tables

1.3-1a Well Network for Monitoring Shallow Groundwater
1.3-1b Well Network for Monitoring Deep Groundwater
1.3-1c Unclassified Wells for Groundwater Monitoring

2.3.1 Selected General Mineral Constituent Concentrations, Cuyama River (in text)

2.4-1 Precipitation Data, 2011, Santa Maria Airport
2.4-2 Reference Evapotranspiration and Precipitation Data, 2011, SMVMA CIMIS Stations

3.1-1a Distribution of Irrigated Acreage, 2011
3.1-1b Historical Distribution of Irrigated Acreage
3.1-1c Applied Crop Water Requirements and Total Agricultural Water Requirements, 2011

3.2-1a Municipal Groundwater Pumpage, 2011
3.2-1b Municipal State Water Project Water Deliveries, 2011
3.2-1c Historical Municipal Water Requirements and Supplies

3.3-1a Total Water Requirements and Supplies, 2011
3.3-1b Recent Historical Total Water Supplies

4.1-1 Applied Crop Water Requirements, Total Agricultural Water Requirements and Return Flows, 2011

4.2-1 Treated Municipal Waste Water Discharge, 2011
4.2-2 Estimated Recent Historical Return Flows from WWTPs and Landscape Irrigation

4.3-1 Water Requirements, Supplies, and Amounts Delivered, Current and Projected

5.1-1 Summary of 2011 Water Requirements, Water Supplies and Disposition (in text)

Acronyms and Abbreviations

af, afy, af/ac	acre-feet, acre-feet per year, acre-feet/acre
AW	applied water
CCRWQCB	Central Coast Regional Water Quality Control Board
CCWA	Central Coast Water Authority
CIMIS	California Irrigation Management Information System
DU	Distribution Uniformity
DWR	California Department of Water Resources
ET	evapotranspiration
ET_{aw}, ET_c, ET_o	ET of applied water, ET of the crop, reference ET
Fm.	formation
GIS	Geographic Information System
GSWC	Golden State Water Company
K_c	crop coefficient
LSCE	Luhdorff & Scalmanini, Consulting Engineers
mg/l	milligrams per liter
MOU	Memorandum of Understanding
Nipomo CSD	Nipomo Community Services District
NMMA	Nipomo Mesa Management Area
NMMA TG	Nipomo Mesa Management Area Technical Group
NO3-NO3	nitrate-as-nitrate
NOAA	National Oceanic and Atmospheric Administration
P_E	effective precipitation
SBCWA	Santa Barbara County Water Agency
SCWC	Southern California Water Company
SLODPW	San Luis Obispo County Department of Public Works
SMVMA	Santa Maria Valley Management Area
SMVWCD	Santa Maria Valley Water Conservation District
SWP	State Water Project
TMA	Twitchell Management Authority
UCCE	University of California Cooperative Extension
USACE	United States Army Corps of Engineers
USGS	United States Geological Survey
umho/cm	micromhos per centimeter
WRP	water reclamation plant
WWTP	waste water treatment plant

1. Introduction

This fourth annual report of conditions in the Santa Maria Valley Management Area, for calendar year 2011, has been prepared to meet the reporting conditions of the June 30, 2005, Stipulation entered by the Superior Court of the State of California, County of Santa Clara in the Santa Maria Valley Groundwater Basin litigation. The Stipulation divided the overall Santa Maria Valley Groundwater Basin into three management areas, the largest of which overlies the main Santa Maria Valley (the Santa Maria Valley Management Area, or SMVMA) and is the subject of this report. The other two management areas, the Nipomo Mesa Management Area (NMMA) and the Northern Cities Management Area, are addressed in separate annual reports prepared by others.

The Stipulation specifies that monitoring shall be sufficient to determine groundwater conditions, land and water uses, sources of water supply, and the disposition of all water supplies in the Basin. Annual Reports for the SMVMA are to summarize the results of the monitoring and include an analysis of the relationship between projected water demand and supply.

In accordance with those specifications, this report on the SMVMA provides a description of the physical setting and briefly describes previous studies conducted in the groundwater basin, including the long-term monitoring program developed for the SMVMA. As reported herein, the Twitchell Management Authority (TMA) commissioned the preparation of a monitoring program for the SMVMA in 2008, and its complete implementation is expected to provide the data with which to fully assess future conditions. This report describes hydrogeologic conditions in the management area historically and through 2011, including groundwater conditions, Twitchell Reservoir operations, and hydrologic and climatic conditions. The water requirements and supplies for agricultural and municipal uses are accounted, as are the components of water disposition in the SMVMA. Discussion is included with regard to any finding of severe water shortage, which is concluded to not be the case through 2011. Finally, findings and recommendations are drawn with regard to further implementation of monitoring and other considerations that will serve as input to future annual reporting. Overall, the organization and formatting of this report is comparable to that utilized for the previous annual reports (2008 through 2010) on conditions in the SMVMA.

1.1 Physical Setting

The Santa Maria Valley Management Area (SMVMA) includes approximately 175 square miles of the Santa Maria Valley Groundwater Basin in northern Santa Barbara and southern San Luis Obispo Counties, as shown by the location map of the area (Figure 1.1-1). The SMVMA encompasses the contiguous area of the Santa Maria Valley, Sisquoc plain, and Orcutt upland, and is primarily comprised of agricultural land and areas of native vegetation, as well as the urban areas of Santa Maria, Guadalupe, Orcutt, Sisquoc, and several small developments. Surrounding the SMVMA are the Casmalia and Solomon Hills to the south, the San Rafael Mountains to the southeast, the Sierra Madre Mountains to the east and northeast, the Nipomo Mesa to the north, and the Pacific Ocean to the west. The main stream is the Santa Maria River,

which generally flanks the northern part of the Santa Maria Valley; other streams include portions of the Cuyama River, Sisquoc River and tributaries, and Orcutt Creek.

1.2 Previous Studies

The first overall study of hydrogeologic conditions in the Santa Maria Valley described the general geology, as well as groundwater levels and quality, agricultural water requirements, and groundwater and surface water supplies as of 1930 (Lippincott, J.B., 1931). A subsequent comprehensive study of the geology and hydrology of the Valley also provided estimates of annual groundwater pumpage and return flows for 1929 through 1944 (USGS, Worts, G.F., 1951). A followup study provided estimates of the change in groundwater storage during periods prior to 1959 (USGS, Miller, G.A., and Evenson, R.E., 1966).

Several additional studies have been conducted to describe the hydrogeology and groundwater quality of the Valley (USGS, Hughes, J.L., 1977; California CCRWQCB, 1995) and coastal portion of the basin (California DWR, 1970), as well as overall water resources of the Valley (Toups Corp., 1976; SBCWA, 1994 and 1996). Of note are numerous land use surveys (California DWR, 1959, 1968, 1977, 1985, and 1995) and investigations of crop water use (California DWR, 1933, and 1975: Univ. of California Cooperative Extension, 1994; Hanson, B., and Bendixen, W., 2004) that have been used in the estimation of agricultural water requirements in the Valley. Recent investigation of the Santa Maria groundwater basin provided an assessment of hydrogeologic conditions, water requirements, and water supplies through 1997 and an evaluation of basin yield (LSCE, 2000).

1.3 SMVMA Monitoring Program

Under the terms and conditions of the Stipulation, a monitoring program was initially prepared in 2008 to provide the fundamental data for ongoing annual assessments of groundwater conditions, water requirements, water supplies, and water disposition in the SMVMA (LSCE, 2008). As a basis for designing the monitoring program, all available historical data on the geology and water resources of the SMVMA were first compiled into a Geographic Information System (GIS). The GIS was utilized to define aquifer depth zones, specifically a shallow unconfined zone and a deep semi-confined to confined zone, into which a majority of monitored wells were then classified based on well depth and completion information. Those wells with inconclusive depth and completion information were originally designated as unclassified wells; in 2009, review of groundwater level and quality records allowed classification of some wells into the shallow or deep aquifer zones. Accordingly, the monitoring program was revised in 2009 to reflect those minor changes to the well networks.

Assessment of the spatial distribution of monitored wells throughout the SMVMA, as well as their vertical distribution within the aquifer system, provided the basis for designation of two monitoring program well networks, one each for the shallow and deep aquifer zones. While the networks are primarily comprised of wells that are actively monitored, they include additional wells that are currently inactive (monitoring to be restarted) and some new wells (installation and monitoring to be implemented). All network wells are to be monitored for groundwater levels, with a subset of those wells to be monitored for groundwater quality, as shown in the maps and

tables of the monitoring program well networks (Figures 1.3-1a and 1.3-1b; Tables 1.3-1a through 1.3-1c). The SMVMA monitoring program is included in Appendix A.

Another use of the GIS was for evaluation of actively and historically monitored surface water and climatic gauges by location and period of record, specifically for Twitchell Reservoir releases, stream discharge, precipitation, and reference evapotranspiration data. Assessment of the adequacy of coverage of the gauges throughout the SMVMA provided the basis for designation of the network of surface water and climate gauges in the monitoring program. The network includes gauges currently monitored as well as those that are inactive ("potential gauges" to potentially be reestablished). For Twitchell Reservoir, stage, storage, releases, and water quality are to be monitored; for surface streams, all current gauges are to be monitored for stage, discharge, and quality (potential gauges monitored for stage and discharge); and for climate, the current and potential stations are to be monitored for precipitation and reference evapotranspiration data, as shown in the map of the surface water and climate monitoring network (Figure 1.3-2). As described in the next chapter, work was conducted on a new climate station on the Santa Maria Valley floor during 2010, with its completion in early 2011.

In addition to the hydrologic data described above, the monitoring program for the SMVMA specifies those data to be compiled to describe agricultural and municipal water requirements and water supplies. These include land use surveys to serve as a basis for the estimation of agricultural irrigation requirements; they also include municipal groundwater pumping and imported water records, including any transfers between purveyors. Lastly, the monitoring program for the SMVMA specifies water disposition data be compiled, including treated water discharged at waste water treatment plants (WWTPs) and any water exported from the SMVMA. As part of this accounting, estimation is to be made of agricultural drainage from the SMVMA and return flows to the aquifer system.

In order to complete this annual assessment of groundwater conditions, water requirements, water supplies, and water disposition in the SMVMA, the following data for 2011 were acquired from the identified sources and compiled in the GIS:

- groundwater level and quality data: the US Geological Survey (USGS), the Santa Maria Valley Water Conservation District (SMVWCD), the Technical Group for the adjacent NMMA (NMMA TG), the City of Santa Maria, and Golden State Water Company;

- Twitchell Reservoir stage, storage, and release data: the SMVWCDand Santa Barbara County Public Works Department;

- surface water discharge and quality data: the USGS;

- precipitation data: the National Weather Service of the National Oceanic and Atmospheric Administration (NOAA), California Department of Water Resources (DWR), and SMVWCD;

- reference evapotranspiration and evaporation data: the California DWR, including California Irrigation Management Information System (CIMIS), and SMVWCD, respectively;

- agricultural land use data: Santa Barbara and San Luis Obispo County Agricultural Commissioner's Offices;

- municipal groundwater pumping and imported water data: the City of Santa Maria, the City of Guadalupe, and the Golden State Water Company; and

- treated municipal waste water data: the City of Santa Maria, the City of Guadalupe, and the Laguna Sanitation District.

1.4 Report Organization

To comply with items to be reported as delineated in the Stipulation, the annual report is organized into five chapters:

- this ***Introduction***;

- discussion of ***Hydrogeologic Conditions***, including groundwater, Twitchell Reservoir, surface streams, and climate;

- description and quantification of ***Water Requirements and Water Supplies*** for the two overall categories of agricultural and municipal land and water use in the SMVMA;

- description and quantification of ***Water Disposition*** in the SMVMA; and

- summary ***Conclusions and Recommendations*** related to water resources, water supplies, and water disposition in 2011, and related to ongoing monitoring, data collection, and interpretation for future annual reporting.

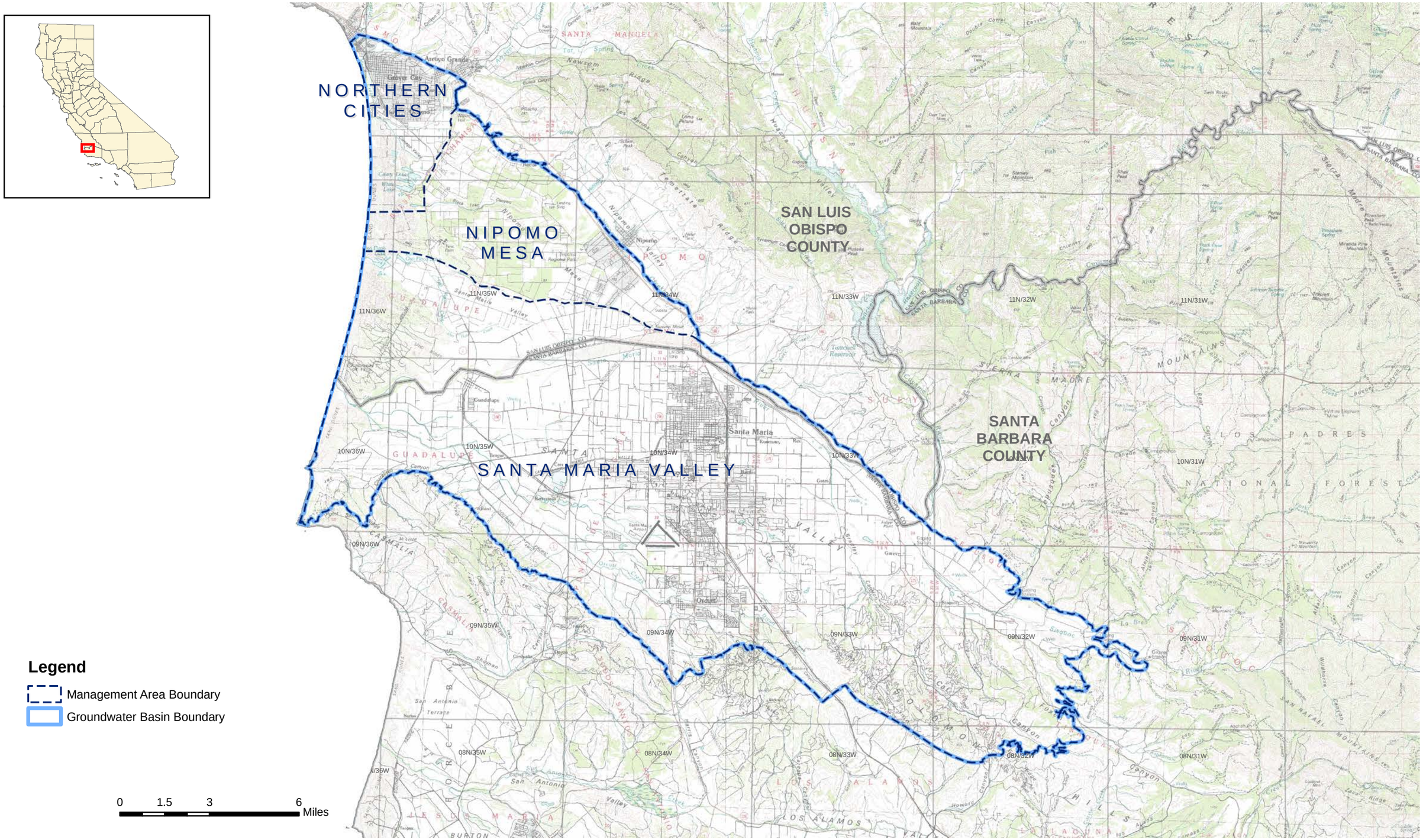

LUHDORFF & SCALMANINI CONSULTING ENGINEERS

Figure 1.1-1
Santa Maria Valley Groundwater Basin and Management Areas
Santa Maria Valley Management Area

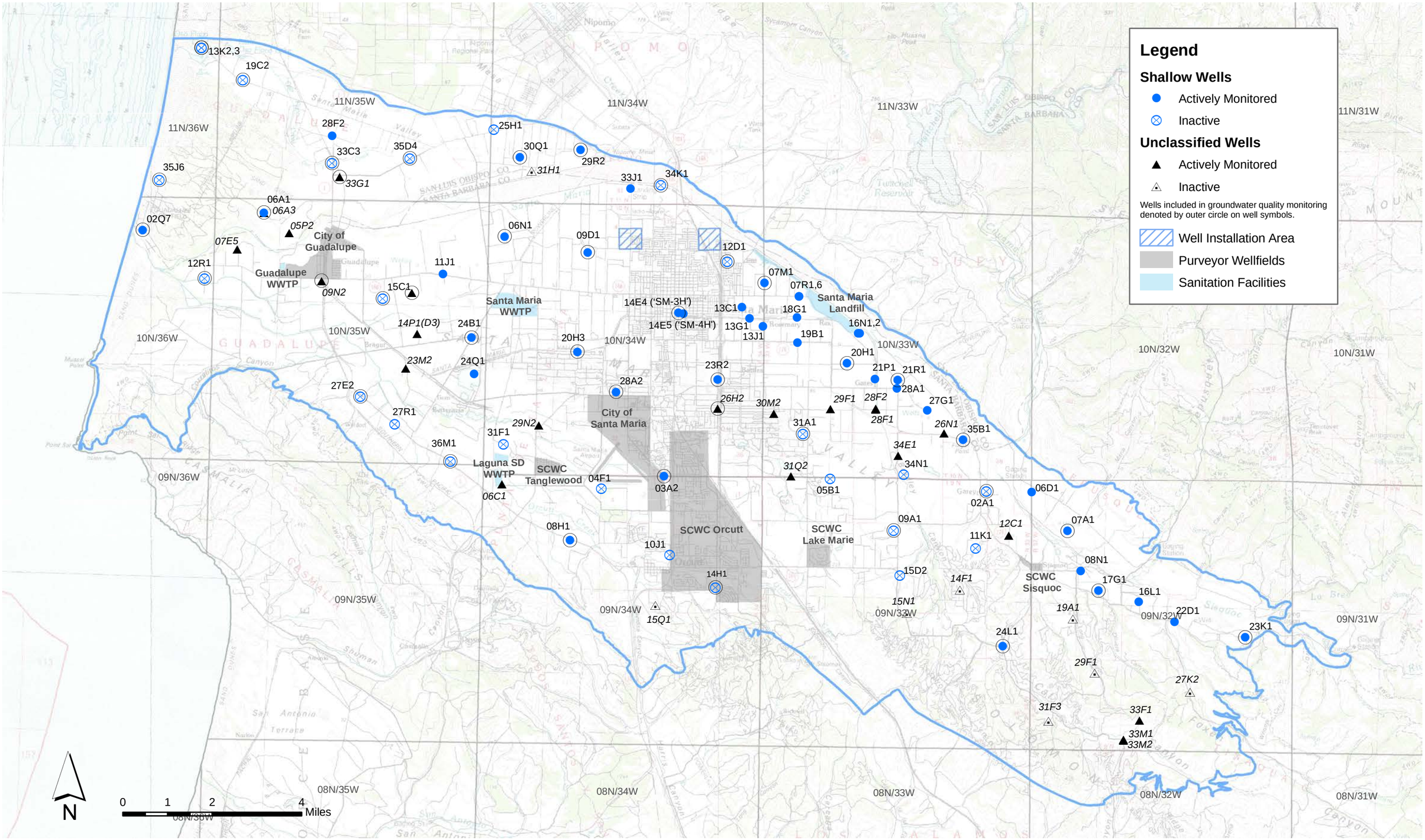

LUHDORFF & SCALMANINI CONSULTING ENGINEERS

Figure 1.3-1a
Well Network for Monitoring Shallow Groundwater
Santa Maria Valley Management Area

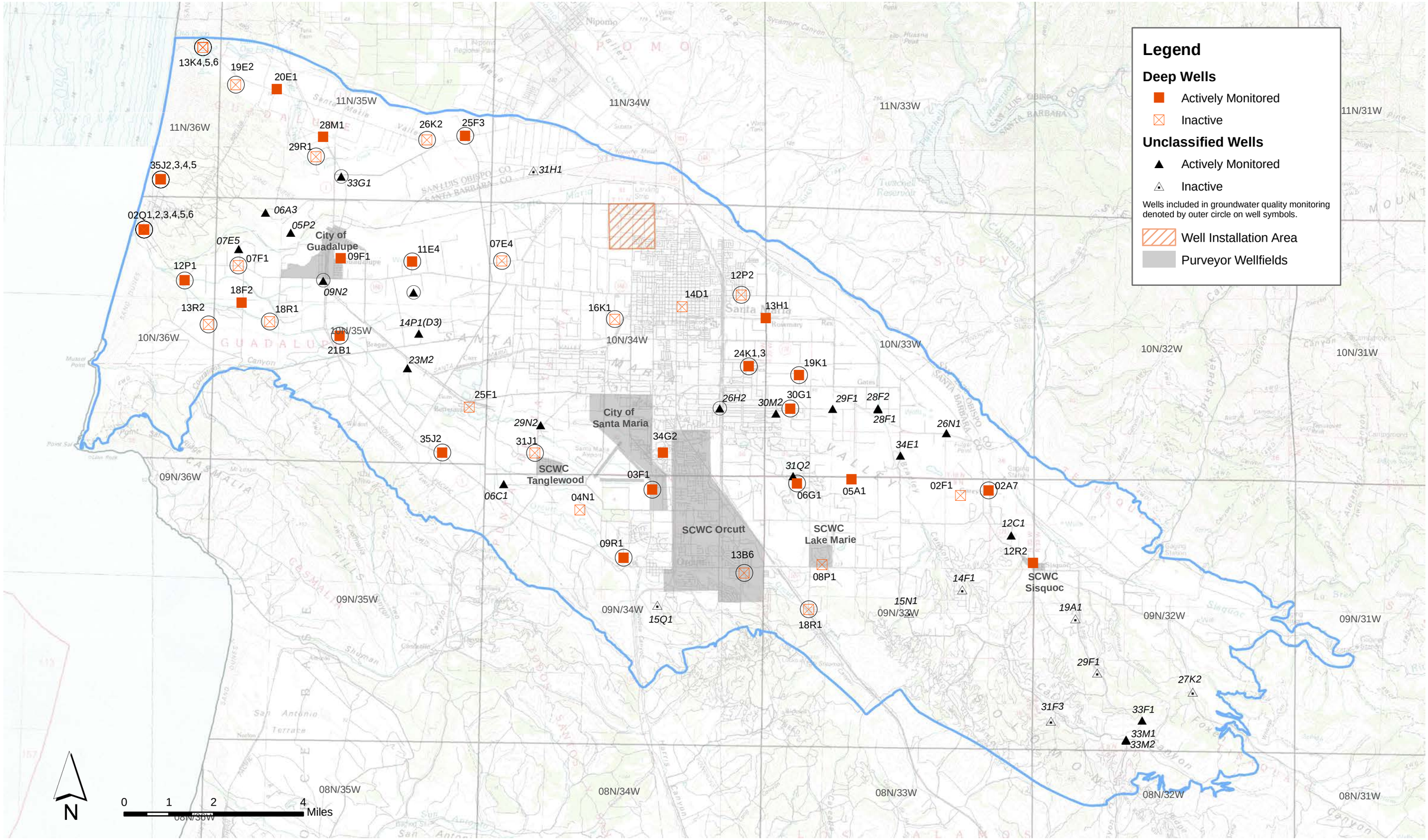

LUHDORFF & SCALMANINI CONSULTING ENGINEERS

Figure 1.3-1b
Well Network for Monitoring Deep Groundwater
Santa Maria Valley Management Area

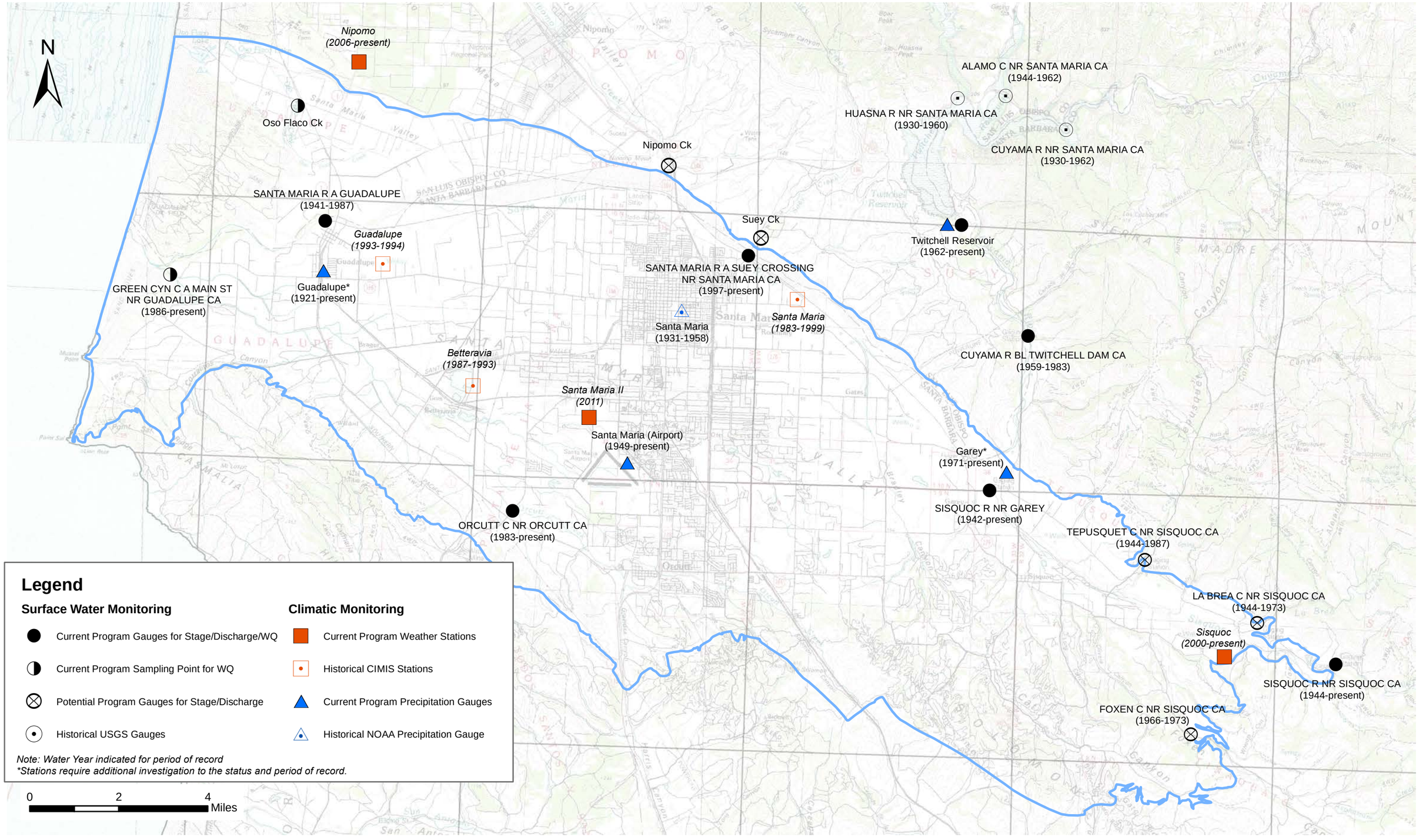

LUHDORFF & SCALMANINI
CONSULTING ENGINEERS

Figure 1.3-2
Surface Water and Climatic Monitoring Network
Santa Maria Valley Management Area

Table 1.3-1a
Well Network for Monitoring Shallow Groundwater
Santa Maria Valley Management Area
(corresponds to Figure 1.3-1a)

Township/ Range	State Well Number	Well Map ID	Monitoring Agency	Actively Monitored for Water Levels	Actively Monitored for Water Quality	To Be Sampled for Water Quality
SHALLOW WELLS						
9N/32W	009N032W06D001S	06D1	USGS	A/S		
	009N032W07A001S	07A1	USGS	A/S		B
	009N032W08N001S	08N1	USGS	A/S		
	009N032W16L001S	16L1	USGS	A/S		
	009N032W17G001S	17G1	USGS	A/S		B
	009N032W22D001S	22D1	USGS	A/S		
	009N032W23K001S	23K1	USGS	A/S		B
9N/33W	009N033W02A001S	02A1	TBD			B
	009N033W05B001S	05B1	TBD			
	009N033W09A001S	09A1	TBD			B
	009N033W11K001S	11K1	TBD			
	009N033W15D002S	15D2	TBD			
	009N033W24L001S	24L1	USGS	A/S		B
9N/34W	009N034W03A002S	03A2	USGS	A/S	A	B
	009N034W04F001S	04F1	TBD			
	009N034W08H001S	08H1	USGS	A/S		B
	009N034W10J001S	10J1	TBD			
	009N034W14H001S	14H1	TBD			B
10N/33W	010N033W07M001S	07M1	USGS	A/S		B
	010N033W07R001S	07R1	USGS	A/S		
	010N033W07R006S	07R6	USGS	A/S		
	010N033W16N001S	16N1	USGS	A/S		
	010N033W16N002S	16N2	USGS	A/S		
	010N033W18G001S	18G1	SMVWCD & USGS	Qtr & S		
	010N033W19B001S	19B1	SMVWCD & USGS	Qtr & S		
	010N033W20H001S	20H1	USGS	A/S	A	B
	010N033W21P001S	21P1	SMVWCD & USGS	Qtr & S		
	010N033W21R001S	21R1	USGS	A/S		B
	010N033W27G001S	27G1	SMVWCD & USGS	Qtr & S		
	010N033W28A001S	28A1	SMVWCD & USGS	Qtr & S		
	010N033W31A001S	31A1	TBD			B
	010N033W34N001S	34N1	TBD			
	010N033W35B001S	35B1	USGS	A/S		B
10N/34W	010N034W06N001S	06N1	SMVWCD & USGS	Qtr & S		B
	010N034W09D001S	09D1	SMVWCD & USGS	Qtr & S		B
	010N034W12D001S	12D1	TBD			B
	010N034W13C001S	13C1	USGS	A/S		
	010N034W13G001S	13G1	USGS	A/S		
	010N034W13J001S	13J1	USGS	A/S		
	010N034W14E004S	14E4	SMVWCD & USGS	Qtr & S	A	B
	010N034W14E005S	14E5	USGS	A/S		
	010N034W20H003S	20H3	SMVWCD & USGS	Qtr & S		B
	010N034W23R002S	23R2	USGS	A/S		B
	010N034W28A002S	28A2	SMVWCD & USGS	Qtr & S		B
	010N034W31F001S	31F1	TBD			
10N/35W	010N035W06A001S	06A1	USGS	A/S		B
	010N035W11J001S	11J1	SMVWCD & USGS	Qtr & S		
	010N035W15C001S	15C1	TBD			B
	010N035W24B001S	24B1	SMVWCD & USGS	Qtr & S		B
	010N035W24Q001S	24Q1	USGS	A/S		
	010N035W27E002S	27E2	TBD			B
	010N035W27R001S	27R1	TBD			
	010N035W36M001S	36M1	TBD			B

Frequency Abbreviation: A/S - Annual/Semiannual; Qtr & S - Quarter & Semiannual; A - Annual; B - Biennial
Agency Abbreviation: SMVWCD - Santa Maria Valley Water Conservation District; SLODPW - San Luis Obispo Department of Public Works; USGS - United States Geological Survey; TBD - To Be Determined

Table 1.3-1a (continued)
Well Network for Monitoring Shallow Groundwater
Santa Maria Valley Management Area
(corresponds to Figure 1.3-1a)

Township/ Range	State Well Number	Well Map ID	Monitoring Agency	Actively Monitored for Water Levels	Actively Monitored for Water Quality	To Be Sampled for Water Quality
SHALLOW WELLS						
10N/36W	010N036W02Q007S	02Q7	USGS	A/S	A	B
	010N036W12R001S	12R1	TBD			B
11N/34W	011N034W29R002S	29R2	SLODPW & USGS	A/S		B
	011N034W30Q001S	30Q1	SMVWCD & USGS	Qtr & S		B
	011N034W33J001S	33J1	SMVWCD & USGS	Qtr & S		
	011N034W34K001S	34K1	TBD			B
11N/35W	011N035W19C002S	19C2	TBD			B
	011N035W25H001S	25H1	TBD			
	011N035W28F002S	28F2	SLODPW & USGS	A/S		
	011N035W33C003S	33C3	TBD			B
	011N035W35D004S	35D4	TBD			B
11N/36W	011N036W13K002S	13K2	TBD			B
	011N036W13K003S	13K3	TBD			B
	011N036W35J006S	35J6	TBD			B

Frequency Abbreviation: A/S - Annual/Semiannual; Qtr & S - Quarter & Semiannual; A - Annual; B - Biennial
Agency Abbreviation: SMVWCD - Santa Maria Valley Water Conservation District; SLODPW - San Luis Obispo Department of Public Works; USGS - United States Geological Survey; TBD - To Be Determined

Notes on Network Modification:

09N/32W-6D1 previously unclassified; classified as shallow well (depth unknown; compared to wells of known depth, water levels similar to those from shallow wells)
09N/33W-12R2 removed; classified as deep well
10N/33W-18G1 previously unclassified; classified as shallow well (depth = 422'; compared to wells of known depth, water levels similar to those from shallow wells)
10N/35W-11J1 previously unclassified; classified as shallow well (depth = 215'; compared to wells of known depth, water levels similar to those from shallow wells)
11N/34W-33J1 previously not included; classified as shallow well (depth = 149'; water level data recently made available by the USGS)
11N/35W-28F2 previously not included; classified as shallow well (depth = 48'; water level data recently made available by NMMA Tech Comm.)
11N/36W-35J5 removed; classified as deep well

Table 1.3-1b
Well Network for Monitoring Deep Groundwater
Santa Maria Valley Management Area
(corresponds to Figure 1.3-1b)

Township/ Range	State Well Number	Well Map ID	Monitoring Agency	Actively Monitored for Water Levels	Actively Monitored for Water Quality	To Be Sampled for Water Quality
DEEP WELLS						
9N/33W	009N033W02A007S	02A7	SMVWCD & USGS	Qtr & S	A	B
	009N033W02F001S	02F1	TBD			
	009N033W05A001S	05A1	USGS	A/S		
	009N033W06G001S	06G1	USGS	A/S		B
	009N033W08P001S	08P1	TBD			
	009N033W12R002S	12R2	SMVWCD & USGS	Qtr & S		
	009N033W18R001S	18R1	TBD			B
9N/34W	009N034W03F001S	03F1	USGS	A/S		B
	009N034W04N001S	04N1	TBD			
	009N034W09R001S	09R1	USGS	A/S		B
	009N034W13B006S	13B6	TBD			B
10N/33W	010N033W19K001S	19K1	USGS	A/S		B
	010N033W30G001S	30G1	SMVWCD & USGS	Qtr & S	A	B
10N/34W	010N034W07E004S	07E4	TBD			B
	010N034W12P002S	12P2	TBD			B
	010N034W13H001S	13H1	USGS	A/S		
	010N034W14D001S	14D1	TBD			
	010N034W16K001S	16K1	TBD			B
	010N034W24K001S	24K1	SMVWCD & USGS	Qtr & S		
	010N034W24K003S	24K3	SMVWCD & USGS	Qtr & S		B
	010N034W31J001S	31J1	TBD			B
	010N034W34G002S	34G2	SMVWCD & USGS	Qtr & S		
10N/35W	010N035W07F001S	07F1	TBD			B
	010N035W09F001S	09F1	USGS	A/S		
	010N035W11E004S	11E4	SMVWCD & USGS	Qtr & S		B
	010N035W18F002S	18F2	USGS	A/S		
	010N035W18R001S	18R1	TBD			B
	010N035W21B001S	21B1	SMVWCD & USGS	Qtr & S		B
	010N035W25F001S	25F1	TBD			
	010N035W35J002S	35J2	USGS	A/S		B
10N/36W	010N036W02Q001S	02Q1	USGS	A/S	A	B
	010N036W02Q002S	02Q2	TBD			B
	010N036W02Q003S	02Q3	USGS	A/S	A	B
	010N036W02Q004S	02Q4	USGS	A/S	A	B
	010N036W02Q005S	02Q5	TBD			B
	010N036W02Q006S	02Q6	TBD			B
	010N036W12P001S	12P1	USGS	A/S		B
	010N036W13R002S	13R2	TBD			B
11N/35W	011N035W19E002S	19E2	TBD			B
	011N035W20E001S	20E1	SMVWCD & USGS	Qtr & S		
	011N035W25F003S	25F3	SMVWCD & USGS	Qtr & S		B
	011N035W26K002S	26K2	TBD			B
	011N035W28M001S	28M1	SMVWCD & USGS	Qtr & S		
	011N035W29R001S	29R1	TBD			B
11N/36W	011N036W13K004S	13K4	TBD			B
	011N036W13K005S	13K5	TBD			B
	011N036W13K006S	13K6	TBD			B
	011N036W35J002S	35J2	USGS	A/S	A	B
	011N036W35J003S	35J3	USGS	A/S	A	B
	011N036W35J004S	35J4	USGS	A/S	A	B
	011N036W35J005S	35J5	USGS	A/S	A	B

Frequency Abbreviation: A/S - Annual/Semiannual; Qtr & S - Quarter & Semiannual; A - Annual; B - Biennial
Agency Abbreviation: SMVWCD - Santa Maria Valley Water Conservation District; USGS - United States Geological Survey; TBD - To Be Determined

Notes on Network Modification:

09N/33W-2A7 previously not included; classified as deep well (depth = 512'; water level data recently made available by the USGS)
09N/33W-12R2 previously classified as shallow well; classified as deep well (depth = 640'; compared to wells of known depth, water levels similar to those from deep wells)
10N/35W-9F1 previously unclassified; classified as deep well (depth = 240'; compared to wells of known depth, water levels similar to those from deep wells)
10N/35W-18F2 previously unclassified; classified as deep well (depth = 251'; compared to wells of known depth, water levels similar to those from deep wells)
10N/35W-21B1 previously unclassified; classified as deep well (depth = 300'; compared to wells of known depth, water levels similar to those from deep wells)
11N/35W-20E1 previously unclassified; classified as deep well (depth = 444'; compared to wells of known depth, water levels similar to those from deep wells)
11N/35W-25F3 previously unclassified; classified as deep well (depth unknown; compared to wells of known depth, water levels similar to those from deep wells)
11N/35W-28M1 previously unclassified; classified as deep well (depth = 376'; compared to wells of known depth, water levels similar to those from deep wells)
11N/36W-35J5 previously classified as shallow well; classified as deep well (depth = 135'; compared to wells of known depth, water levels and quality similar to those from deep coastal network wells)

Table 1.3-1c
Unclassified Wells for Groundwater Monitoring
Santa Maria Valley Management Area
(shown on Figures 1.3-1a and 1.3-1b)

Township/ Range	State Well Number	Well Map ID	Monitoring Agency	Actively Monitored for Water Levels	Actively Monitored for Water Quality	To Be Sampled for Water Quality
UNCLASSIFIED WELLS						
9N/32W	009N032W19A001S	19A1	TBD			
	009N032W27K002S	27K2	TBD			
	009N032W29F001S	29F1	TBD			
	009N032W31F003S	31F3	TBD			
	009N032W33F001S	33F1	USGS	A/S		
	009N032W33M001S	33M1	USGS	A/S		
	009N032W33M002S	33M2	USGS	A/S		
9N/33W	009N033W12C001S	12C1	USGS	A/S		
	009N033W14F001S	14F1	TBD			
	009N033W15N001S	15N1	TBD			
9N/34W	009N034W06C001S	06C1	USGS	A/S		
	009N034W15Q001S	15Q1	TBD			
10N/33W	010N033W26N001S	26N1	USGS	A/S		
	010N033W28F001S	28F1	USGS	A/S		
	010N033W28F002S	28F2	USGS	A/S		
	010N033W29F001S	29F1	USGS	A/S		
	010N033W30M002S	30M2	USGS	A/S		
	010N033W31Q002S	31Q2	USGS	A/S		
	010N033W34E001S	34E1	USGS	A/S		
10N/34W	010N034W26H002S	26H2	USGS	A/S		B
	010N034W29N002S	29N2	USGS	A/S		
10N/35W	010N035W05P002S	05P2	USGS	A/S		
	010N035W06A003S	06A3	USGS	A/S		
	010N035W07E005S	07E5	USGS	A/S		
	010N035W09N002S	09N2	USGS	A/S		B
	010N035W14P001S	14P1 (D3)[1]	USGS	A/S	(A)	(A)
	010N035W23M002S	23M2	USGS	A/S		
11N/34W	011N034W31H001S	31H1	TBD			
11N/35W	011N035W33G001S	33G1	SMVWCD & USGS	Qtr & S		B

[1]14P1 actively monitored for levels but not quality. 14D3 actively monitored for quality but not levels.

Frequency Abbreviation: A/S - Annual/Semiannual; Qtr & S - Quarter & Semiannual; A - Annual; B - Biennial
Agency Abbreviation: SMVWCD - Santa Maria Valley Water Conservation District; USGS - United States Geological Survey; TBD - To Be Determined

Notes on Network Modification:

09N/32W-6D1 removed; classified as shallow well
10N/33W-18G1 removed; classified as shallow well
10N/35W-9F1 removed; classified as deep well
10N/35W-11J1 removed; classified as shallow well
10N/35W-18F2 removed; classified as deep well
10N/35W-21B1 removed; classified as deep well
11N/35W-20E1 removed; classified as deep well
11N/35W-25F3 removed; classified as deep well
11N/35W-28M1 removed; classified as deep well

2. Hydrogeologic Conditions

Current and historical hydrogeologic conditions in the SMVMA, including groundwater conditions, Twitchell Reservoir operations, and stream and climate conditions, are described in the following sections of this Chapter.

2.1 Groundwater Conditions

To provide a framework for discussion of groundwater conditions, the geology of the SMVMA, including geologic structure and the nature and extent of geologic formations comprising the aquifer system, is described in the following section. Current groundwater levels are then described in relation to historical trends in groundwater levels and flow directions in the SMVMA, as well as in context of Stipulation protocol for defining conditions of severe water shortage. Current and historical groundwater quality conditions are also discussed, including general groundwater quality characteristics as well as groundwater quality degradation, specifically due to elevated nitrate concentrations.

2.1.1 Geology and Aquifer System

The SMVMA is underlain by unconsolidated alluvial deposits that comprise the aquifer system, primarily gravel, sand, silt and clay that cumulatively range in thickness from about 200 to 2,800 feet. The alluvial deposits fill a natural trough, which is composed of older folded and consolidated sedimentary and metamorphic rocks with their deepest portions beneath the Orcutt area. The consolidated rocks also flank the Valley and comprise the surrounding hills and mountains; typically, the consolidated rocks do not yield significant amounts of groundwater to wells. The geologic formations comprising the alluvial deposits and the geologic structure within the study area are illustrated in a generalized geologic map (Figure 2.1-1a) and two geologic cross sections (Figures 2.1-1b and 2.1-1c).

The alluvial deposits are composed of the Careaga Sand and Paso Robles Formation (Fm.) at depth, and the Orcutt Fm., Quaternary Alluvium, and river channel, dune sand, and terrace deposits at the surface (USGS, Worts, G.F., 1951). The Careaga Sand, which ranges in thickness from about 650 feet to a feather edge, is identified as being the lowermost fresh water-bearing formation in the basin (DWR, 1970), resting on the above-mentioned consolidated rocks (specifically, the Tertiary-aged Foxen Mudstone, Sisquoc Fm., and Monterey Shale and the Jurassic/Cretaceous-aged Franciscan Fm., descriptions of which may be found in USGS, Worts, G.F., 1951). Overlying the Careaga Sand is the Paso Robles Fm., which comprises the greatest thickness of the alluvial deposits (from about 2,000 feet to a feather edge); the thickest portion of this formation is located beneath the Orcutt area. Both the Careaga Sand and Paso Robles Fm. underlie the great majority of the SMVMA (see Figures 2.1-1b and 2.1-1c). The Careaga Sand is mainly composed of white to yellowish-brown, loosely-consolidated, massive, fossiliferous, medium- to fine-grained sand with some silt and is reported to be predominantly of marine origin (USGS, Worts, G.F., 1951). The Paso Robles Fm. is highly variable in color and texture, generally composed of yellow, blue, brown, grey, or white lenticular beds of: boulders and coarse to fine gravel and clay; medium to fine sand and clay; gravel and sand; silt; and clay

(USGS, Worts, G.F., 1951). This formation is reported to be primarily fluvial (stream-laid) in origin and there is no areal correlation possible between the individual beds, with the exception of a coarse basal gravel of minor thickness in the Santa Maria Valley oil field, generally in the southeast part of the SMVMA.

Above the Paso Robles Fm. and comprising the Orcutt Upland is the Orcutt Fm., which is typically about 160 to 200 feet thick; in the remainder of the SMVMA, the Paso Robles Fm. is overlain by the Quaternary Alluvium, which comprises the majority of the Valley floor and is typically about 100 to 200 feet thick. Further north in the adjacent NMMA, the Paso Robles Fm. is overlain by the Older Dune Sand, which comprises the Nipomo Mesa and ranges in thickness from approximately 400 feet to a feather edge. Along the northeast edge of the Sisquoc plain, the Paso Robles Fm. is overlain by terrace deposits approximately 60 feet thick. The Orcutt Fm. is composed of conformable upper and lower units ("members"), both reported to be mainly of fluvial origin that become finer toward the coast. The upper member generally consists of reddish-brown, loosely-compacted, massive, medium-grained clean sand with some lenses of clay, and the lower member is primarily grey to white, loosely-compacted, coarse-grained gravel and sand (USGS, Worts, G.F., 1951).

The Quaternary Alluvium is also composed of upper and lower members that are reported to be mainly fluvial in origin. The composition of the upper member becomes progressively finer toward the coast, with boulders, gravel, and sand in the Sisquoc plain area; sand with gravel in the eastern/central Valley area; sand with silt from the City of Santa Maria to a point approximately halfway to Guadalupe; and clay and silt with minor lenses of sand and gravel from that area westward. The lower member is primarily coarse-grained boulders, gravel and sand with minor lenses of clay near the coast. The Older Dune Sand is composed of loosely- to slightly-compacted, massive, coarse- to fine-grained, well-rounded, cross-bedded quartz sand that is locally stained dark reddish-brown (California DWR, 1999). The terrace deposits, in general, are similar in composition to the coarse-grained parts of the Quaternary Alluvium.

Two geologic cross sections illustrate several points about the geologic structure and variable aquifer thickness throughout the SMVMA. Longitudinal geologic cross section A-A' (see Figure 2.1-1b) begins in the area near the mouth of the Santa Maria River, traverses the Orcutt Upland, and terminates in the Sisquoc plain area near Round Corral, immediately southeast of the SMVMA. It shows the relative thicknesses of the various geologic formations and their general "thinning" from the central valley area toward the Sisquoc plain. This cross section also shows the Quaternary Alluvium and Orcutt Fm., essentially adjacent to each other and comprising the uppermost aquifer in the SMVMA, divided into the above-described upper and lower members.

Transverse geologic cross section B-B' (see Figure 2.1-1c) begins in the Casmalia Hills, traverses the western portion of the Valley (near the City of Guadalupe) and the southern Nipomo Mesa, and terminates at Black Lake Canyon. It shows the prominent asymmetrical syncline (folding of the consolidated rocks and Paso Robles Fm.) within the SMVMA and adjacent NMMA, with the deepest portion of Paso Robles Fm. toward the southern edge of the SMVMA, gradually becoming thinner and more shallow toward the north where it extends beneath the NMMA. This cross section also shows that both the upper and lower members of

the Quaternary Alluvium extend north to the Santa Maria River, but only the upper member extends beyond the River to the southern edge of the Nipomo Mesa, and neither member extends northward beneath the Mesa.

Several faults have been reported to be located in the SMVMA and adjacent portion of the NMMA. The Santa Maria and Bradley Canyon faults, located in the Valley in the area between the City of Santa Maria and Fugler Point (at the confluence of the Cuyama and Sisquoc Rivers to form the Santa Maria River), are concealed and they are reported to be northwest-trending, high-angle faults, that vertically offset the consolidated rocks, Careaga Sand, and Paso Robles Fm., but not the overlying Quaternary Alluvium or Orcutt Fm. (USGS, Worts, G.F., 1951). The Oceano and Santa Maria River faults are of a similar nature (the latter fault also has a significant strike-slip component of movement), but they are primarily located in the southern Nipomo Mesa. The maximum vertical offset on the Oceano fault is reported to be in the range of 300 to 400 feet within the Careaga Sand and Paso Robles Fm.; on the other faults, the vertical offset is reported to be much less, within the range of 80 to 150 feet (USGS, Worts, G.F., 1951; California DWR, 1999). However, these faults do not appear to affect groundwater flow within the SMVMA, based on the review of historical groundwater level contour maps (USGS, Worts, G.F., 1951; LSCE, 2000).

There is no known structural (e.g., faulting) or lithologic isolation of the alluvial deposits from the Pacific Ocean; i.e., the Quaternary Alluvium, Orcutt Fm., Careaga Sand, and Paso Robles Fm. aquifers continue beneath the Ocean. Thus, there is geologic continuity that permits groundwater discharge from the SMVMA to the Ocean, and the potential exists for salt water to intrude into the coastal (landward) portions of the aquifers if hydrologic conditions within them were to change.

The aquifer system in the SMVMA is comprised of the Paso Robles Fm., the Orcutt Fm., and the Quaternary Alluvium (USGS, Worts, G.F., 1951). The upper member of the Quaternary Alluvium is consistently finer-grained than the lower member throughout the Valley. Further, the upper member becomes finer grained toward the Ocean such that it confines groundwater in the lower member from the approximate area of the City of Santa Maria's waste water treatment plant westward (approximately eight miles inland from the coast). The result of this has been some artesian conditions in the western valley area (historically, flowing artesian wells were reported until the early 1940s in the westernmost portion of the Valley) (USGS, Worts, G.F., 1951). More recently, many wells belonging to local farmers in the western valley area, specifically in the Oso Flaco area, began flowing again in response to rising confined groundwater levels during winter 1999.

Analysis of the geology, groundwater levels, and groundwater quality indicates that the aquifer system varies across the area and with depth, and this variation was the basis for the shallow and deep aquifer zone designations of the SMVMA monitoring program (LSCE, 2008). In the central and major portion of the SMVMA, there is a shallow unconfined zone comprised of the Quaternary Alluvium, Orcutt Fm., and uppermost Paso Robles Fm., and a deep semi-confined to confined zone comprised of the remaining Paso Robles Fm. and Careaga Sand. In the eastern portion of the SMVMA where these formations are much thinner and comprised of coarser materials, particularly in the Sisquoc Valley, the aquifer system is essentially uniform without

distinct aquifer depth zones. In the coastal area where the surficial deposits (upper members of Quaternary Alluvium and Orcutt Fm.) are extremely fine-grained, the underlying formations (lower members of Quaternary Alluvium and Orcutt Fm., Paso Robles Fm., and Careaga Sand) comprise a deep confined aquifer zone.

2.1.2 Groundwater Levels

Groundwater levels within the SMVMA have fluctuated greatly since the 1920's, when historical water level measurements began, with marked seasonal and long-term trends, as shown by a collection of representative groundwater level hydrographs from various areas throughout the SMVMA (Figure 2.1-2). The areas are designated on Figure 2.1-2 for illustrative purposes only, and include the so-called Coastal, Oso Flaco, Central Agricultural, Municipal Wellfield, Twitchell Recharge, and Sisquoc Valley areas. The historical groundwater level hydrographs illustrate that widespread decline in groundwater levels, from historical high to historical low levels, occurred between 1945 and the late 1960's. The declines ranged from approximately 20 to 40 feet near the coast, to 70 feet near Orcutt, to as much as 100 feet further inland (in the area just east of downtown Santa Maria). Those declines were observed in both the shallow and deep aquifer zones, and are interpreted today to have been the combined result of progressively increasing agricultural (and to a lesser degree, municipal) demand and long-term drier than normal climatic conditions during that period.

Since then, the basin has alternately experienced significant recharge (recovery) and decline which, collectively, reflect a general long-term stability as groundwater levels in both aquifer zones have fluctuated between historical-low and near historical-high levels over alternating five- to 15-year periods. Groundwater levels throughout the SMVMA have shown this trend, but with different ranges of fluctuation (see Figure 2.1-2); and groundwater levels have repeatedly recovered to near or above previous historical-high levels, including as recently as 2002. In the areas along the Santa Maria River, groundwater level fluctuations are greater in the shallow aquifer zone than the deep (see Twitchell Recharge Area, Central Agricultural Area, and Oso Flaco Area hydrographs). Conversely, in the Municipal Wellfield and Coastal Areas, groundwater level fluctuations are greater in the deep aquifer zone. Hydrographs from wells along the coastal portion of the SMVMA show that groundwater elevations have remained above sea level, with deep (confined) groundwater levels rising enough to result in flow at the ground surface, throughout the historical period of record. The periodic groundwater level fluctuation since the late 1960's (with a long-term stability) have apparently been due to intermittent wet and dry climatic conditions, with natural recharge during wet periods complemented by supplemental recharge along the Santa Maria River from the Twitchell Reservoir project (since becoming fully operational in the late 1960's). Long-term stability would also appear to be partially attributable to a general "leveling-off" of agricultural land and water use in the basin since the early to mid-1970’s, as further described in Chapter 3.

More recently, from 2002 through 2010, groundwater levels in both the shallow and deep zones gradually declined, with the largest amount visible in portions of the Sisquoc Valley and Oso Flaco areas. Particularly in light of prevailing land use and water requirements, this overall groundwater level decline can be considered to be at least partially due to the fact that Twitchell Reservoir releases, for in-stream supplemental groundwater recharge, have been well below the

historical average in most years since 2000 (including no releases in 2009 or 2010), as discussed in Section 2.2. The groundwater level decline in the Sisquoc Valley, specifically the lack of full recovery during the prolonged wet period of the mid-1990s through 2001, is in contrast to the full recovery observed in the Santa Maria Valley portion of the SMVMA during that time period. Subsequently, during 2011, groundwater levels across most of the SMVMA rose, at least partially in response to above average releases from Twitchell Reservoir following above average rainfall in December 2011 and early 2011. Importantly, 2011 groundwater levels do not trigger the Stipulation provisions for defining conditions of severe water shortage because, among other considerations, they remain within the historical range of groundwater levels throughout the SMVMA. Also important is that coastal groundwater levels remain well above sea level through 2011 and, thus, conditions that would be indicative of potential sea water intrusion are absent.

Groundwater beneath the SMVMA has historically flowed to the west-northwest from the Sisquoc area toward the Ocean, and this remained the case during 2011 as illustrated by contour maps of equal groundwater elevation for the shallow and deep aquifer zones (Figures 2.1-3a through 2.1-3f). One notable feature in the contour maps regarding hydrologic conditions in 2011 is the widening of groundwater level contours beneath the central-south and western portions of the SMVMA. This indicates a reduced (flatter) groundwater gradient, tending slightly toward a local pumping depression, likely reflecting ongoing groundwater pumping in and around the municipal wellfield near the Santa Maria Airport and Town of Orcutt. In this area, both agricultural and municipal water supply wells of the City of Santa Maria and the Golden State Water Company are operated, although municipal pumping in 2011 remained notably lower than prior to the availability of State Water Project water as discussed in Chapter 3. The majority of municipal groundwater pumping is conducted from the purveyors' deep wells, and the groundwater elevation maps show greater flattening of the gradient in the deep aquifer zone. Overall, this has had the effect of slowing (but not stopping or reversing) the movement of groundwater through that portion of the SMVMA. However, it should be noted that agricultural and/or municipal groundwater pumping has been conducted in this area for many decades, and a generally reduced groundwater gradient has been observed since about 1960 (USGS, Miller, G.A., and Evenson, R.E., 1966; USGS, Hughes, J.L., 1977; LSCE, 2000).

Also notable is the overall seasonal difference in shallow and deep zone water levels across the SMVMA from early spring through the fall period. Some decline was observed between February and April (early and late spring contour maps, respectively) with additional decline through late October in areas distant from the Santa Maria River, presumably reflecting groundwater pumping during the year. In areas near the River however, groundwater levels rose between spring and fall 2011, likely due to substantial recharge from Twitchell Reservoir releases and Sisquoc River discharge beginning as early as February and continuing through the year.

During both spring and fall periods, and particularly in the western portion of the SMVMA, a seaward gradient for groundwater flow was maintained in both aquifer zones. Importantly, coastal groundwater levels in both aquifer zones remained well above sea level, with groundwater elevations typically exceeding 15 feet, MSL.

Lastly, with support from the TMA and through the efforts of the SMVWCD in 2011, groundwater levels were measured in almost 20 additional shallow and deep wells during the fall period. The groundwater level data from those wells, which are typically measured by the USGS in spring but not fall, provided greater areal coverage of fall groundwater level contours (generally equivalent to spring period coverage) across the SMVMA (see Figures 2.1-3c and 3f).

2.1.3 Groundwater Quality

Groundwater quality conditions in the SMVMA have fluctuated greatly since the 1930's, when historical water quality sampling began, with marked short- and long-term trends. Groundwater quality in the SMVMA historically reflected the various natural sources of recharge to the aquifer system, most notably streamflows of the Cuyama and Sisquoc Rivers that provided recharge along the Santa Maria River. The great majority of groundwater in the SMVMA, primarily in the eastern and central portions of the Santa Maria Valley and in the Sisquoc Valley, had historically been of a calcium magnesium sulfate type originating from the Cuyama and Sisquoc River streamflows. Groundwater had historically been of better quality toward the Orcutt Upland, Nipomo Mesa, the City of Guadalupe, and coastal areas (Lippincott, J.B., 1931).

With development of the Valley and surrounding areas in the 1940's through 1970's, including expansion of the agricultural and urban areas and addition of the Twitchell Reservoir project, groundwater quality conditions changed within the SMVMA. The changes included improvement of the general groundwater quality in the eastern to central part of the Santa Maria Valley in and near the area of Twitchell Reservoir recharge, including the current-day municipal wellfield near the Town of Orcutt. Degradation in groundwater quality occurred further west and downgradient in the Valley, specifically with elevated general mineral and nitrate concentrations (USGS, Hughes, J.L., 1977).

Subsequently, from the 1970's through 2011, general mineral concentrations in groundwater have remained essentially unchanged, including the occurrence of better quality water in the SMVMA's eastern, central, and southern portions and poorer quality water to the west. Further, groundwater quality is generally slightly better in the deep aquifer zone compared to the shallow, as shown by a map with representative historical groundwater quality graphs from areas throughout the SMVMA (Figure 2.1-4). While groundwater quality data from 2011 for the SMVMA are extremely sparse (recommendations for water quality monitoring are addressed in Chapter 5), assessment of those data indicates that, during 2011, specific conductance values in the shallow aquifer zone generally ranged between 1,100 and 1,500 umho/cm in the Twitchell Recharge and Municipal Wellfield Areas, and were about 1,600 umho/cm in the Coastal Area. Specific conductance values in the deep zone were between 1,200 and 1,600 umho/cm in the Twitchell Recharge Area; between 900 and 1,100 umho/cm in the Municipal Wellfield Area; and generally less than 1,600 umho/cm in the Coastal Area (less than 1,100 umho/cm in groundwater deeper than 600 feet). No specific conductance data were available in 2011 for the deep zone in the Sisquoc Valley. Overall, specific conductance values in the SMVMA generally remain at or below the California Department of Public Health's secondary standard of 1,600 umho/cm.

In contrast to the stability in general groundwater quality concentrations observed during this recent period, nitrate concentrations in shallow groundwater have progressively increased. In

some cases, the increase has been to the point where municipal purveyors have had to reduce or cease pumping from water supply wells with shallow zone completions, or install a packer to isolate production from the deep zone, in order to comply with drinking water standards. In 2011, nitrate-as-nitrate (NO3-NO3) concentrations in shallow groundwater remained elevated, in many areas above the primary drinking water standard of 45 mg/l. In the Twitchell Recharge Area, nitrate concentrations appeared slightly higher in 2011 than 2010, but with a great increase reported for well 10N/33W-20H1, from 90 to almost 110 mg/l (see Figure 2.1-4). Perhaps more indicative of some localized farming activity, nitrate concentrations in this well have substantially fluctuated over the last decade, from less than 20 mg/l in 2002 to 110 mg/l in 2005, down to 40 mg/l by 2008, before the latest increasing trend through 2011. Nitrate concentrations in the Municipal Wellfield Area continue a slight increasing trend from just above 50 mg/l a decade ago to about 65 mg/l currently. In the Coastal Area, nitrate concentrations in shallow groundwaterremained non-detect (less than 0.18 mg/l).

Compared to widespread elevated nitrate concentrations in shallow groundwater, deep groundwater concentrations remain markedly lower, generally less than 10 mg/l. Exceptions to this have been two deeper wells in the south-southeast part of the Valley (9N/33W-02A7 and 9N/34W-03F2), with nitrate concentrations between 30 and 35 mg/l, and some coastal deep monitoring wells with nitrate levels exceeding 75 mg/l, as discussed below.

Of particular importance to ongoing assessment of potential conditions of sea water intrusion are the groundwater quality data from two sets of coastal monitoring wells. During an investigation conducted in the late 1960's, for which the monitoring well sets were constructed, localized areas of degraded shallow groundwater were identified but concluded at the time to be due to environmental factors other than intrusion (California DWR, 1970). Review of the coastal monitoring results through 2011, in particular specific conductance values, provides an indication of whether sea water intrusion has occurred in the coastal SMVMA; review of coastal nitrate concentrations provides a measure of the extent and magnitude of water quality degradation from land use activities further inland.

Since the commencement of coastal groundwater quality monitoring, including in 2011, coastal groundwater has continued to show elevated but largely unchanging specific conductance values. Shallow groundwater at the southerly monitoring well set (10N/36W-02Q, shallow well 02Q7, Figure 2.1-4) had values of about 1,500 umho/cm in 2011, substantially lower than the 2,200 umho/cm value reported in 2010. Deep groundwater values (wells 02Q1, 02Q3, and 02Q4) have been lower, between 900 and 1,000 umho/cm over the last 30 years. Groundwater at the more northerly monitoring well set (11N/36W-35J) shows more variation in specific conductance values with depth, from 1,100 umho/cm in the deepest well (35J2), increasing to 1,500 umho/cm in the next deepest well (35J3), to 1,900 umho/cm in the next deepest well (35J4). Specific conductance values in the shallowest well (35J5) have gradually risen throughout the monitoring period through 2011 from about 1,400 to 1,700 umho/cm.

Some coastal groundwaters, specifically in the deep aquifer zone near the northerly monitoring well set (11N/36W-35J), have shown gradually increasing degradation from nitrate, including through the present. Nitrate (as nitrate) concentrations have steadily risen from a range of 5 to 10 mg/l in the 1980’s to between 37 and 77 mg/l in 2011 (see Figure 2.1-4). In contrast,

groundwaters in all aquifer zones near the southerly monitoring well set (10N/36W-02Q) have consistently shown very low concentrations of nitrate through the present (historical water quality graphs for these wells are provided in Appendix C). Shallow groundwater continued to have non-detectable levels of nitrate (less than 0.18 mg/l) and deep groundwater concentrations remained below 3 mg/l through 2011. Nitrate concentrations in the deepest groundwater, specifically below a depth of 600 feet, along the coast (at both well sets) remain stable with values of 3 mg/l or less.

Overall, the groundwater quality monitoring results from 2011 indicate general mineral quality conditions remain stable across the SMVMA and in particular along the coast, with no indication of sea water intrusion. Specific conductance values remain elevated in groundwater in all areas, to levels generally ranging between 900 and 1,600 umho/cm. In contrast, degradation from nitrate remains in shallow groundwater across the SMVMA, with concentrations in some areas well above the primary drinking water standard of 45 mg/l. A long-term gradual increase in nitrate concentrations continues in deep groundwater at the northerly portion of the coast, to between 37 and 77 mg/l, while they remained less than 10 mg/l in deep groundwater at the municipal wellfield.

2.2 Twitchell Reservoir Operations

In order to describe Twitchell Reservoir operations, monthly records of reservoir stage, storage, and releases were updated and recorded observations of reservoir conditions were noted. The historical stage, storage, and releases, including through 2011, are described in relation to observed climatic conditions in the SMVMA.

2.2.1 Reservoir Stage and Storage

Historical stage and storage in Twitchell Reservoir, for which reliable records begin in 1967, indicate a typical seasonal rise with winter and spring rain, followed by decline through subsequent spring and summer releases. Reservoir stage has risen to as high as about 640 feet msl, corresponding to storage of nearly 190,000 acre-feet, on several occasions during the winter and spring months of years during which rainfall amounts were substantially higher than average. Historical rises in stage have been rapid, occasionally over one or two months, with subsequent declines gradually spread over the subsequent year or multiple years. During those years when releases have essentially emptied the reservoir for purposeful supplemental groundwater recharge through the Santa Maria River channel, the dam operator recorded the associated minimum reservoir stage, which has risen over time from about 480 feet msl in 1968, to 525 feet msl since 1986. This rise reflects the long-term filling of former dead pool storage (about 40,000 acre-feet below the reservoir outlet for release from conservation storage) with sediment that has naturally occurred with operation of the project (SMVWCD, 1968-2011). These seasonal fluctuations and long-term rise in minimum stage, shown in relation to the reservoir conservation, flood control, and surcharge pools, are illustrated in a graph of historical reservoir stage and storage (Figure 2.2.1a).

It is noteworthy that the sedimentation of the former dead pool storage below the conservation outlet in Twitchell Reservoir has not impeded the conservation of runoff for subsequent release

for downstream groundwater recharge. Except for a few individual years over the life of the reservoir, accumulated storage in any year has been less than the designated active conservation pool of 109,000 af. In the infrequent wet years when greater storage could be conserved, e.g. 1969, 1978, 1983, 1995, and 1998, the SMVWCD has been permitted to temporarily utilize some of the dedicated flood control pool (89,000 af) to conserve those additional inflows and then shortly release them for downstream recharge. Total storage has never exceeded the combined conservation pool and flood control pool storage volume (198,000 af) and has never invaded the uppermost surcharge pool (159,000 af above the conservation and flood control pools) in the overall reservoir.

Reservoir storage has historically risen to between 150,000 and nearly 190,000 acre-feet (af) during the winter and spring months of years during which rainfall was substantially higher than average, with storage commonly below 50,000 af during most other years. As can be seen on Figure 2.2-1a, reservoir storage has repeatedly dropped to essentially zero during periods of below-average rainfall, including those associated with drought conditions in 1976-77 and 1987-90. Reservoir storage was also essentially zero during most of 2000 through 2004 as a result of a drier climatic period that began in 2001. About 50,000 af of storage were accrued in both 2005 and 2006, all of which was released for downstream groundwater recharge. There was essentially no storage in 2007 and, during 2008, reservoir storage reached a maximum of about 20,000 af in March before being almost entirely released for recharge by the end of the year. In 2009, a total of only about 1,000 af accrued in February, after which storage rapidly declined through reservoir evaporation and seepage. Storage accrued in early 2010 to 14,000 af with a rapid increase to almost 40,000 af in response to more than nine inches of rainfall during December without conducting any releases. Above average rainfall continued into early 2011, building storage to almost 93,000 af in April, with releases commencing in February and continuing through December.

2.2.2 Reservoir Releases

Twitchell Reservoir annual releases for in-stream groundwater recharge since 1967 have ranged from zero during low rainfall years and drought periods to a maximum of 243,660 af in 1998, as illustrated in a bar chart of annual reservoir releases (Figure 2.2-1b). In general, and most notably in the Twitchell Recharge Area, groundwater levels have tended to track Twitchell releases since the beginning of Reservoir operations (see Figure 2.1-2 and 2.2-1b). The long-term average annual release amount for the period 1967 through 2011 is 52,800 afy, with below-average releases during slightly more than half of those years. The five-year period from 1995 through 1999 is notable for continual releases in amounts well above the annual average, reflecting a wetter climatic period from 1993 through 1998. Also notable are multiple year periods when releases dropped to zero, specifically from 1987 through 1990 and from 2002 through 2004, reflecting the drier climatic conditions during those periods of time. While releases in 2005 and 2006 amounted to about 106,000 and 80,000 af, respectively, drier climatic conditions persisted with no releases for in-stream groundwater recharge in 2009 or 2010. The release of nearly 90,000 af of water from Twitchell Reservoir was conducted from February through December 2011, with the highest amounts during the months of June through September.

As described in the SMVMA 2010 annual report, project work was completed at the Twitchell Dam in late 2009 and early 2010 that included removal of sediment from 1,100 feet of tunnel and gate chamber, effectively restoring the dam outlet works, service gates, and stilling basin to full operational status. Also in 2010, additional project work was completed including sediment removal from the dam outlet tunnel, stilling basin, keyhole, and 1,600 linear feet of the Cuyama River immediately downstream of the dam (T. Gibbons, personal communication). This project work restored the conservation release function of the Twitchell project and provided for enhanced flood control immediately downstream of the dam and groundwater recharge in the Santa Maria Valley during 2011.

2.2.3 Instream Steelhead Fisheries Study

An instream steelhead fisheries study was recently completed for the Santa Maria, Sisquoc, and Cuyama Rivers watershed (Stillwater Sciences, April 2012), and discussion of the study, primarily its recommendations, is provided herein. The stated purpose of the study was "to characterize the historical and current conditions of instream flow in the Santa Maria River and to determine what, if any, modifications to the current flow regime would improve upstream passage for adult steelhead, through the mainstem into the upper watershed, and downstream passage of juvenile steelhead through the mainstem to the estuary and ocean."

The basic premise of the study is that a return to the pre-Twitchell Dam flow regime, through some modification of Twitchell Reservoir releases, would be sufficient to improve steelhead migration into the future. Thus, the study objectives were to characterize differences in pre- and post-Twitchell Dam flow regimes, including discharge rates, flow durations, frequency of steelhead passage events upstream and downstream, and infiltration losses along a 5-mile "critical passage" reach of the Santa Maria River near Bonita School Crossing. Steelhead passage criteria, both hydraulic and temporal, were estimated, and studies to determine the flow regime supporting those criteria were conducted by varied methods, including:

- analyses of historical discharge records in the Sisquoc, Cuyama (including Twitchell Reservoir releases), and Santa Maria Rivers;
- calculation by Manning's Equation of stream water width, depth, and velocity associated with varying discharge rate at numerous channel transects in the "critical passage" reach of the Santa Maria River;
- field measurement of stream water width, depth, and velocity during varying flow events at channel transects in the "critical passage" reach; and
- simulation by a simplified coupled surface water:groundwater model of stream discharge and infiltration losses along the Sisquoc and Santa Maria Rivers from Garey to the estuary.

Of note from the study results is a finding that the post-Twitchell Dam flow regime has resulted in slightly less frequent steelhead passage events compared to the pre-Twitchell period; further, infiltration losses along the migration length of the Sisquoc and Santa Maria Rivers were simply estimated to range between 300 and 450 cfs.

A summary of study assumptions regarding minimum stream discharge rates and durations supportive of the hydraulic criteria (i.e., water depth and width) for steelhead passage include:

- Initiation of upstream migration of adult steelhead would be coincident with flows of 250 cfs in the "critical passage" reach of the mainstem Santa Maria River.

- Upstream adult steelhead passage would require at least three days of flow greater than or equal to 250 cfs the "critical passage" reach of the mainstem Santa Maria River, as measured in the vicinity of the Bonita School Road and Highway 1 crossings. Flows of at least 150 cfs would be required in the lower Sisquoc River to achieve passage through that reach.

- Downstream juvenile passage would require at least one day of flow greater than or equal to 150 cfs through the "critical passage" reach of the mainstem Santa Maria River, with at least two preceding days of passable flows in the upstream Sisquoc River.

Study recommendations comprise a "strategy" to increase flow in the Cuyama River when the Sisquoc River is flowing at a rate that, historically (pre-Twitchell), would have resulted in potentially suitable steelhead-passage conditions in the mainstem Santa Maria River. As stated in the report, recommendations include:

- Flow augmentation from releases at Twitchell Dam to improve steelhead passage windows should occur in accord with the following rules during the months of December-April.

- Flow augmentation (releases) should occur when average daily flows in the lower Sisquoc River, as measured at the Garey gage, are between 350 and 550 cfs and have already remained at or above that level for at least two previous days. Once started, the releases should occur if/as needed to ensure passage flows in the mainstem Santa Maria River for at least three days.

- Flow augmentation (releases) should be sufficient to maintain flows in the critical reach of the mainstem Santa Maria River at 250 cfs; absent direct measurement of flow, this is assumed to be achieved with combined discharge from the Sisquoc and Cuyama Rivers of 600 cfs (i.e., transmission losses are 350 cfs unless observations show otherwise).

- Flow augmentation (releases) to support steelhead passage should not occur, or should stop once started, if (a) discharges fall below 150 cfs in the lower Sisquoc River, or (b) twelve or more days of adult steelhead-passable conditions have been achieved during the current water year.

It is estimated in the study that implementation of these recommendations would result in an average volume between 1,000 to 1,500 afy of augmentation releases from Twitchell Reservoir; that is, releases for the purpose of augmenting streamflow for steelhead migration that would therefore not be available for recharging the groundwater basin.

A number of points can be made regarding the study and recommendations, perhaps most importantly that:

1) no description is provided of steelhead populations in the Santa Maria and Sisquoc Rivers, either observed in the pre-Twitchell Dam period or predicted with implementation of the study recommendations, so it is unknown what improvement in steelhead fisheries can be anticipated for such an "investment" of basin water supply;

2) diversion of Twitchell water supply to augment streamflows that are ultimately lost from the basin constitutes a permanent, long-term reduction in recharge to the groundwater basin, when no surplus condition or alternate water supply has been identified in the basin to support this diversion;

3) no simulation or prediction was made of potential effects on groundwater levels and quality in the basin from implementation of the recommendations, namely the reduced recharge to the basin;

4) while the reason for conducting the study was to fulfill requirements of the California Department of Fish and Game, it remains to be clarified whether there is any compelling basis for implementing the study recommendations; and

5) related to the previous point is the need to resolve any conflict between said compelling basis, should it exist, and the 2005 Stipulation for the groundwater basin resulting from the basin adjudication, that specifies among other things directives for managing the basin, including Twitchell recharge operations, and awards rights to recover return flows from the importation of SWP water.

Discussion of these points is provided in the Recommendations section of this annual report.

2.3 Streams

The surface water hydrology of the SMVMA is characterized in this section, specifically the current conditions in relation to historical trends in stream discharge and quality.

2.3.1 Discharge

The main streams entering the SMVMA are the Cuyama and Sisquoc Rivers; these rivers join on the Santa Maria Valley floor near Garey and become the Santa Maria River, which drains the Valley from that point westward (see Figure 1.3-2). The headwaters of the Sisquoc River include a portion of the San Rafael Mountains and Solomon Hills, and the River's main tributaries within the SMVMA are Foxen, La Brea, and Tepusquet Creeks. Streamflow in the Sisquoc River and its tributary creeks have remained unimpaired through the present. The Cuyama River drains a portion of the Sierra Madre Mountains, including the Cuyama Valley, and streamflow into the Santa Maria River has been controlled since construction of Twitchell Dam between 1957 and 1959. The Santa Maria River receives minor streamflows from two

small tributaries, Suey and Nipomo Creeks, along its course toward the City of Guadalupe and the Pacific Ocean. In the southern portion of the SMVMA, Orcutt Creek drains a portion of the Solomon Hills (Solomon Canyon) and the Orcutt area, receives intermittent flow from Graciosa Canyon, before ending near Betteravia.

Stream discharge in the Cuyama River below the dam, recorded during the initial period of Twitchell project operations between 1959 and 1983, averaged 37,350 afy. As discussed above, Twitchell Reservoir releases have averaged 52,800 afy from 1967 through 2011. The historical variation in reservoir releases and Cuyama River streamflow is shown in a bar chart of annual surface water discharge for the River (Figure 2.3-1a). Cuyama River stream discharge, which comprises the largest source of SMVMA groundwater recharge, has ranged over the historical period of record from no streamflow during several drought years, including as recently as 2010, to a high of almost 250,000 af during 1998. Stream discharge in 2011 from Twitchell releases was almost 90,000 af, well above the 1967-2011 average of 52,800 afy.

Stream discharge in the Sisquoc River, recorded at gauges at the southeast end of the Sisquoc plain and further downstream near the town of Garey, averages 38,000 (absent data from years 1999-2007) and 39,500 afy, respectively, over the historical period of record. The downstream gauge provides a measure of the stream discharge entering the SMVMA from the Sisquoc plain, and it reflects inflow from the headwaters of the Sisquoc River and its tributaries, as well as gains from and losses to the shallow aquifer in the Sisquoc plain. The historical variation in Sisquoc River streamflow is shown in a bar chart of annual surface water discharge for the River at both gauges (Figure 2.3-1b). Sisquoc River stream discharge, which comprises a large source of SMVMA groundwater recharge, has ranged over the historical period of record from no streamflow during several drought years to over 300,000 af during 1998; the 2011 annual discharge into the SMVMA was well above average, approximately 160,000 af. Of note is that the upstream gauge (“near Sisquoc”) was non-operational, and thus no data are available, from 1999 through 2007. Further, discharge amounts in the tributaries Foxen, La Brea, and Tepusquet Creeks have not been recorded since the early 1970's (early 1980's for the latter creek), when gauge operations were discontinued. As a result, the net amount of groundwater recharge in the Sisquoc plain from the Sisquoc River currently cannot be quantified. Reestablishment and monitoring of these currently inactive gauges (Foxen, La Brea, and Tepusquet Creeks), as previously outlined in the SMVMA Monitoring Program and recommended in this annual report, would provide for better understanding of the distribution of recharge along the Sisquoc River.

Streamflow in the Santa Maria River has been recorded at two gauges during varying periods of time (see Figure 1.3-2). At the Guadalupe gauge, which was operational between 1941 and 1987, stream discharge ranged from no streamflow during numerous years to almost 185,000 af during 1941, and averaged 26,800 afy prior to the commencement of Twitchell project operations compared to 17,600 afy during the period of Twitchell project operations. The historical variation in Santa Maria River streamflow is shown in a bar chart of annual surface water discharge for the River (Figure 2.3-1c). The reduction in streamflow at Guadalupe is attributed to Twitchell project operations, which are intended to maximize recharge along the more permeable portion of the River streambed by managing reservoir releases to maintain a “wetline” (downstream extent of streamflow) only as far as the Bonita School Road Crossing.

Supplemental recharge to the Santa Maria Valley from Twitchell project operations has been estimated to be about 32,000 afy based on comparison of pre- and post-project net losses in streamflow between Garey and Guadalupe (LSCE, 2000). The estimation does not account for changes in climatic conditions between the pre- and post-project periods or losses/gains along the Santa Maria River due to other processes, which could result in changes in the amount of water available for recharge over time. As a result of discontinued stream discharge measurements at Guadalupe since 1987, combined with the lack of gauged data for Suey and Nipomo Creeks, the net amount of groundwater recharge in the Santa Maria Valley from the Santa Maria River currently cannot be updated. Reestablishment and monitoring of these currently inactive gauges (Suey Creek, Nipomo Creek, and Santa Maria River at Gaudalupe), as previously outlined in the SMVMA Monitoring Program and recommended in this annual report, would provide for better understanding of the distribution of streamflow and recharge along the Santa Maria River.

Stream discharge in the Santa Maria River has also been recorded more recently at a gauge at Suey Crossing northeast of the City of Santa Maria. However, these data are reported only sporadically, as for years 1999 and 2006, or not at all, as in 2000 through 2005. The discharge data for 2009 through 2011 remain problematic due to uncertainties in streamflow rating curves; however, future acquisitions of the discharge data from this gauge will also enhance an understanding of streamflow and recharge along the Santa Maria River.

Stream discharge in Orcutt Creek, recorded at Black Road crossing from 1983 through the present (absent data from years 1992 through 1994), averages about 1,500 afy, ranging from essentially no streamflow during several years to just over 10,000 af in 1995; in 2011, stream discharge was above average, approximately 2,500 af. The historical variation in streamflow is shown in a bar chart of annual surface water discharge for the creek (Figure 2.3-1d). While essentially all streamflow recorded at the gauge ultimately provides groundwater recharge to the SMVMA, it is not known how much groundwater recharge or discharge occurs upstream from the gauge, specifically between the gauge and the point where Orcutt Creek enters the SMVMA.

2.3.2 Surface Water Quality

The majority of recharge to the SMVMA has historically derived from streamflow in the Santa Maria River originating from the Cuyama and Sisquoc Rivers. Thus, groundwater quality in much of the SMVMA has historically reflected the water quality of streamflow in the Cuyama and Sisquoc Rivers. Water quality in the rivers depends on the proportion and quality of the rainfall runoff and groundwater inflow contributing to streamflow in their respective watersheds above the Santa Maria Valley. The Cuyama River watershed includes the Cuyama Valley, which is reported to be underlain by geologic formations containing large amounts of gypsum; the Sisquoc River watershed is primarily steep terrain underlain by consolidated rocks (USGS, Worts, G.F., 1951).

The quality of the streamflow in both the Cuyama and Sisquoc Rivers has historically been of a calcium magnesium sulfate type, although the Sisquoc River contains slightly less sulfate and more bicarbonate than the Cuyama River. The Cuyama River quality has improved at two points in time during the historical period, specifically the mid-1940's and the late 1960's (USGS,

Hughes, J.L., 1977). The improvement observed in the mid-1940's is thought to be due to agricultural development of the Cuyama Valley that was supported by increased groundwater pumping in that Valley for irrigation. The increased pumping lowered groundwater levels in the Cuyama Valley, in turn reducing groundwater inflow to the Cuyama River, thereby reducing the contribution of dissolved salts (sulfate in particular) to the River. The improvement observed in the late 1960's is thought to be due to implementation of Twitchell Reservoir project operations, which facilitated conservation of Cuyama River runoff and augmented recharge to the Santa Maria Valley groundwater basin. Specifically, the higher streamflow events in the Cuyama River that previously discharged to the ocean are of a better quality due to dilution by greater rainfall runoff. Releases from Twitchell Dam therefore contain a lower amount of dissolved salts than the Cuyama River streamflows from the period preceding the project. The improvement in Cuyama River water quality from both of these developments is summarized in Table 2.3-1. More recent water quality data for the River were unavailable for review for this report.

Table 2.3-1

Selected General Mineral Constituent Concentrations
Cuyama River below Twitchell Reservoir
(USGS, Hughes, J.L., 1977)

Constituent	Years 1906 and 1941	Years 1958 - 1966	Years 1967 - 1975
Specific Conductance (umho/cm)	1,700 - 4,500	1,300 - 2,400	750 - 2,100
Sulfate (mg/l)	700 - 1,700	450 - 700	190 - 550
Chloride (mg/l)	90 - 140	50 - 100	25 -85

Water quality in the Sisquoc River likely has remained relatively unchanged since 1906 although much fewer historical data are available than for the Cuyama River. The water quality concentrations measured between 1940 and 1975 are lower than observed in the Cuyama River during any of the above periods of time, with approximately 1,100 umho/cm specific conductance, 350 mg/l sulfate, and 20 mg/l chloride (USGS, Hughes, J.L., 1977). Review of more recent water quality data indicate that specific conductance values have remained essentially unchanged, ranging from 900 to 1,200 umho/cm, from 1975 through to the present, as seen in a graph of Sisquoc River water quality (Figure 2.3-2a). The latter data have been collected essentially monthly, and a slight seasonal variation in specific conductance is visible in most years, with values increasing as discharge decreases. The Sisquoc River has also been monitored for nitrate since 1975 on an annual basis, with NO_3-NO_3 concentrations at or below reporting limits.

The Sisquoc River data described above were collected at the upstream gauge (near Sisquoc) at the point where the river enters the Sisquoc plain and, thus, do not fully describe the quality of flows entering the Santa Maria Valley further downstream near Garey. Limited historical water quality data for the Sisquoc River near Sisquoc and near Garey, and for its tributary streams, indicate that the quality of streamflows entering the Sisquoc plain are slightly improved by tributary inflows (USGS, Hughes, J.L., 1977).

In contrast to the quality of streamflows in the Cuyama and Sisquoc Rivers, the quality of Orcutt Creek flows is highly degraded, with specific conductance values typically fluctuating between 1,100 and 3,500 umho/cm, with values exceeding 5,500 umho/cm in 2005 and 2006. Subsequently, specific conductance values have declined to the previous range, as seen in a graph of Orcutt Creek historical water quality (Figure 2.3-2b). Orcutt Creek flows also became highly degraded by nitrate, with NO_3-NO_3 concentrations remaining above the health-based standard of 45 mg/l since 2005, exceeded 125 mg/l in 2007 through 2009, and declined to about 70 mg/l in 2011.

An additional surface water monitoring point is on Green Canyon, a drainage canal that courses from south of Guadalupe westward and, with other small drainages, joins the Santa Maria River. Specific conductance values were 2,200 umho/cm in the late 1980's, after which they have greatly fluctuated between 900 and 3,100 umho/cm. Nitrate (as nitrate) concentrations ranged from 60 to 80 mg/l in the late 1980's and have since substantially increased to range between 100 and 200 mg/l. However, no water quality data have been available since 2009.

2.4 Climate

The climatic data reported for the SMVMA are characterized in this section, specifically the current conditions in relation to historical trends in precipitation and evapotranspiration data.

2.4.1 Precipitation

At least three precipitation gauges are or have been located in the SMVMA, specifically at Guadalupe, Santa Maria (currently at the Airport and previously downtown), and Garey (see Figure 1.3-2). The average annual rainfall measured at the Santa Maria Airport gauge, the most centrally located of the three gauges, is 12.99 inches, as shown in a bar chart of historical precipitation (Figure 2.4-1). Historically, the majority of rainfall occurs during the months of November through April and, while over nine inches of rain occurred in December 2010, total rainfall in calendar year 2011 was close to the average at 13.47 inches with almost six inches falling in March alone, as shown in Table 2.4-1.

Long-term rainfall characteristics for the SMVMA are reflected by the cumulative departure curve of historical annual precipitation (on Figure 2.4-1), which indicates that the SMVMA has generally experienced periods of wetter than normal conditions alternating with periods of drier than normal to drought conditions. Wet conditions prevailed from the 1930's through 1944, followed by drier conditions from 1945 through the late 1960's. Subsequently, there have been shorter periods of alternating wet and dry conditions, including the most recent cycle of a wet period in the early-1990's to 1998, followed by a period of slightly dry conditions from 2001 through 2009. This pattern of fluctuations in climatic conditions closely corresponds to the long-term fluctuations in groundwater levels described in section 2.1.2, including the substantial decline observed between 1945 and the late 1960's and the subsequent repeating cycle of decline and recovery between historical-low and historical-high groundwater levels. Although the total rainfall in 2010 greatly exceeded the long-term average, a large portion of rainfall occurred in December following the measurement of fall groundwater levels. The rise in groundwater levels

observed through 2011 in much of the SMVMA is attributed in large part to the recharge of runoff generated from the December 2010 rainfall and subsequent above average rainfall in early 2011 along the Sisquoc, Cuyama, and Santa Maria Rivers.

2.4.2 Evapotranspiration

Three CIMIS climate stations were initially operated within the SMVMA for varying periods of time, specifically at Santa Maria, Betteravia, and Guadalupe between 1983 and 1997 (see Figure 1.3-2). Subsequently, CIMIS stations began operating near Sisquoc and on the southern Nipomo Mesa, the latter located just outside of the SMVMA, with climate data available for full calendar years beginning in 2001 and 2007, respectively. These five stations have recorded daily reference evapotranspiration (ETo) and precipitation amounts, with annual ETo values typically ranging between 42 and 53 inches and averaging about 48 inches, as shown in a bar chart of the historical ETo values for the SMVMA (Figure 2.4-2).

Daily climate data for 2011 from the Nipomo and Sisquoc stations are listed in Table 2.4-2, which shows that annual ETo and precipitation amounts were 43.58 and 16.54 inches, respectively, at Nipomo and 47.54 and 30.36 inches, respectively, at Sisquoc. As reported in the 2010 annual report, a CIMIS climate station located on the floor of the Santa Maria Valley ("Santa Maria II" near the Santa Maria airport, see Figure 1.3-2) was reestablished in April 2011. The reference ETo and precipitation data collected at this new station from April through December are provided in Table 2.4-2; however, lacking January through March data, the annual amounts are unknown.

Evapotranspiration was highest during the months of April through August at all three stations. The 2011 precipitation recorded at the Nipomo station, 16.54 inches, was the most similar to the amount observed at the Santa Maria Airport precipitation gauge, 13.47 inches. In contrast, the precipitation recorded at the Sisquoc station, 30.36 inches, greatly exceeded that observed at the Airport gauge. For this reason, and as described in the next chapter, the 2011 precipitation data from the Airport gauge, the average of the ETo data recorded at the Nipomo and Sisquoc stations for the months of January through March, and the average of the ETo data from all three CIMIS stations for the months of April through December were utilized in the estimation of agricultural water requirements for the SMVMA in 2011.

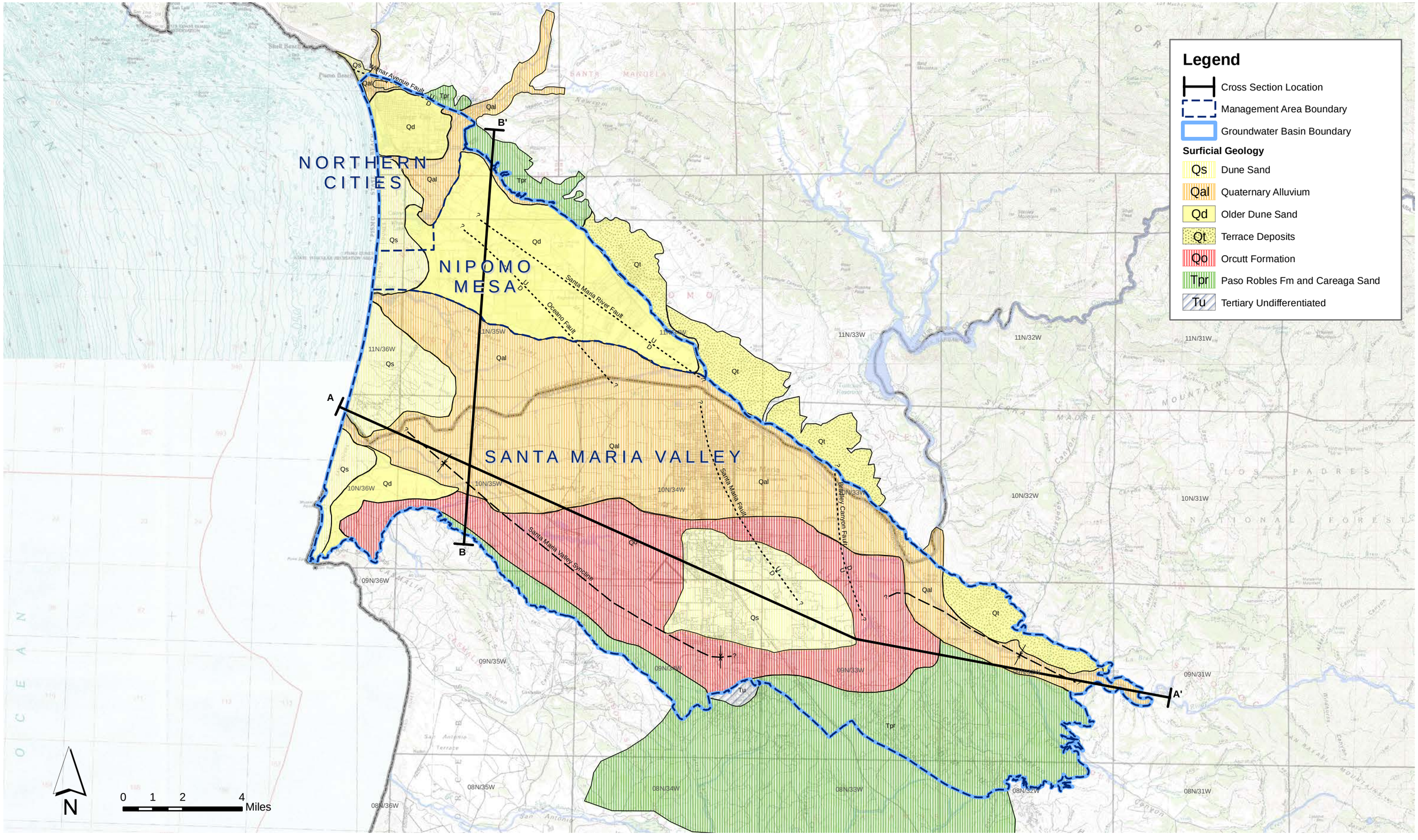

LUHDORFF & SCALMANINI CONSULTING ENGINEERS

Figure 2.1-1a
Generalized Geologic Map with Cross Section Locations
Santa Maria Valley Management Area

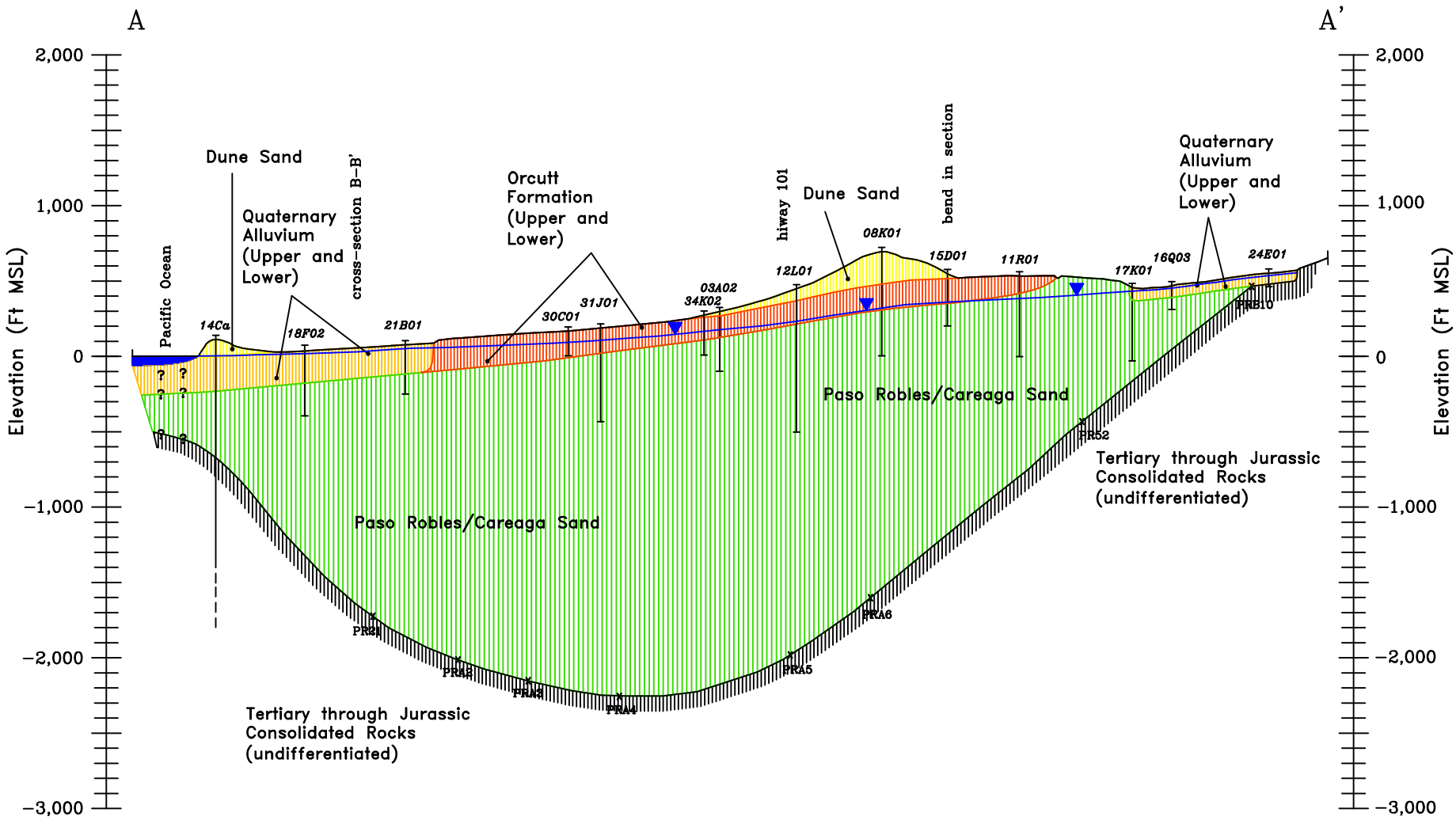

Ground−water levels shown are based on measurements made in a separate network of wells

Vertical Exaggeration = x20

C:\SantaMaria 2008\Annual Report 2008\Fig 2.1−1b XSec A−A' 2008.dwg

LUHDORFF & SCALMANINI CONSULTING ENGINEERS

Figure 2.1-1b
Longitudinal Geologic Cross Section, A-A'
Santa Maria Valley Management Area

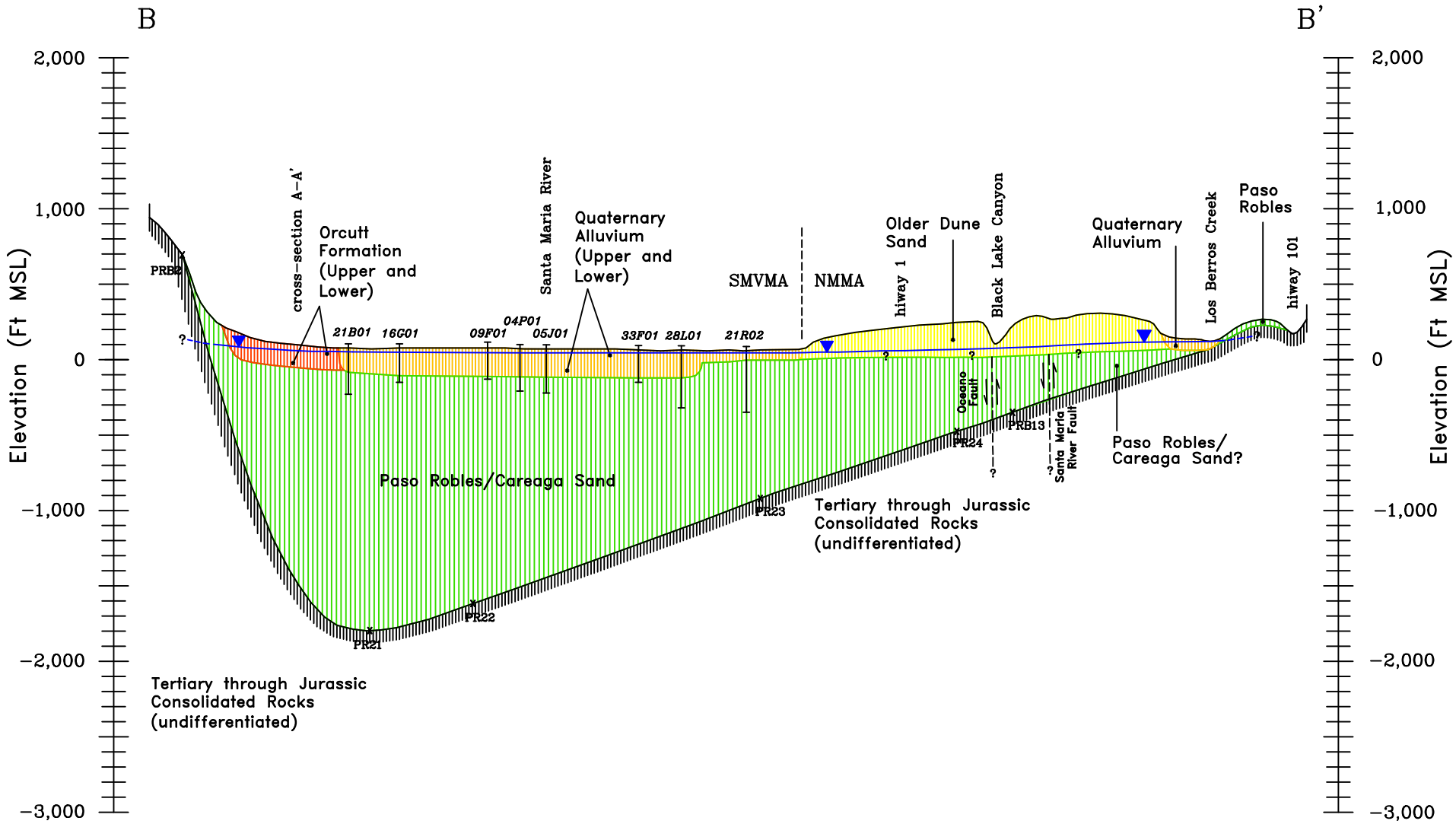

Ground-water levels shown are based on measurements made in a separate network of wells

Vertical Exaggeration = x10

C:\Santa Maria 2008\Annual Report 2008\Fig 2.1-1c XSec B-B' 2009.dwg

LUHDORFF & SCALMANINI CONSULTING ENGINEERS

Figure 2.1-1c
Transverse Geologic Cross Section, B-B'
Santa Maria Valley Management Area

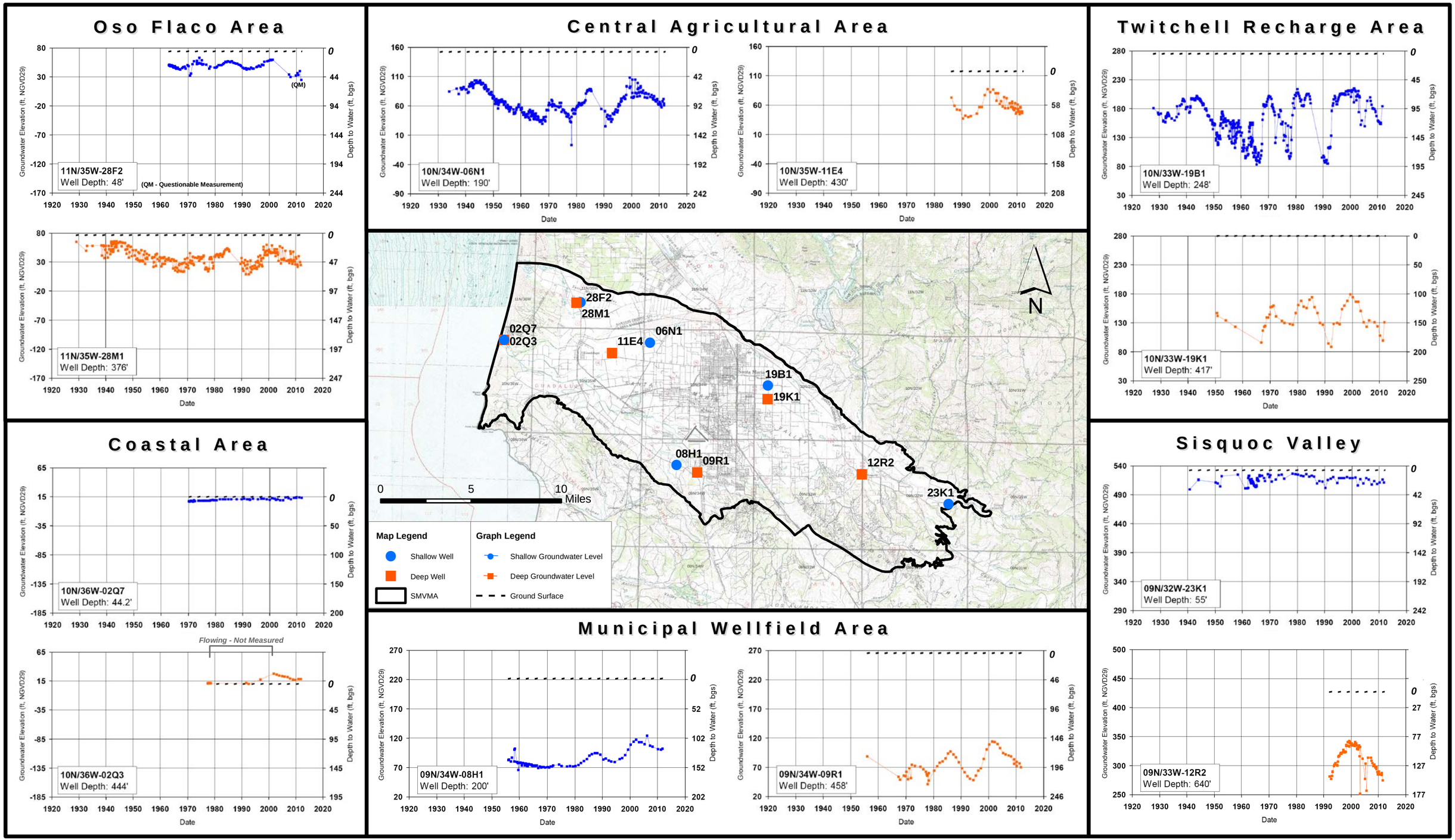

LUHDORFF & SCALMANINI
CONSULTING ENGINEERS

Figure 2.1-2
Historical Groundwater Levels
Santa Maria Valley Management Area

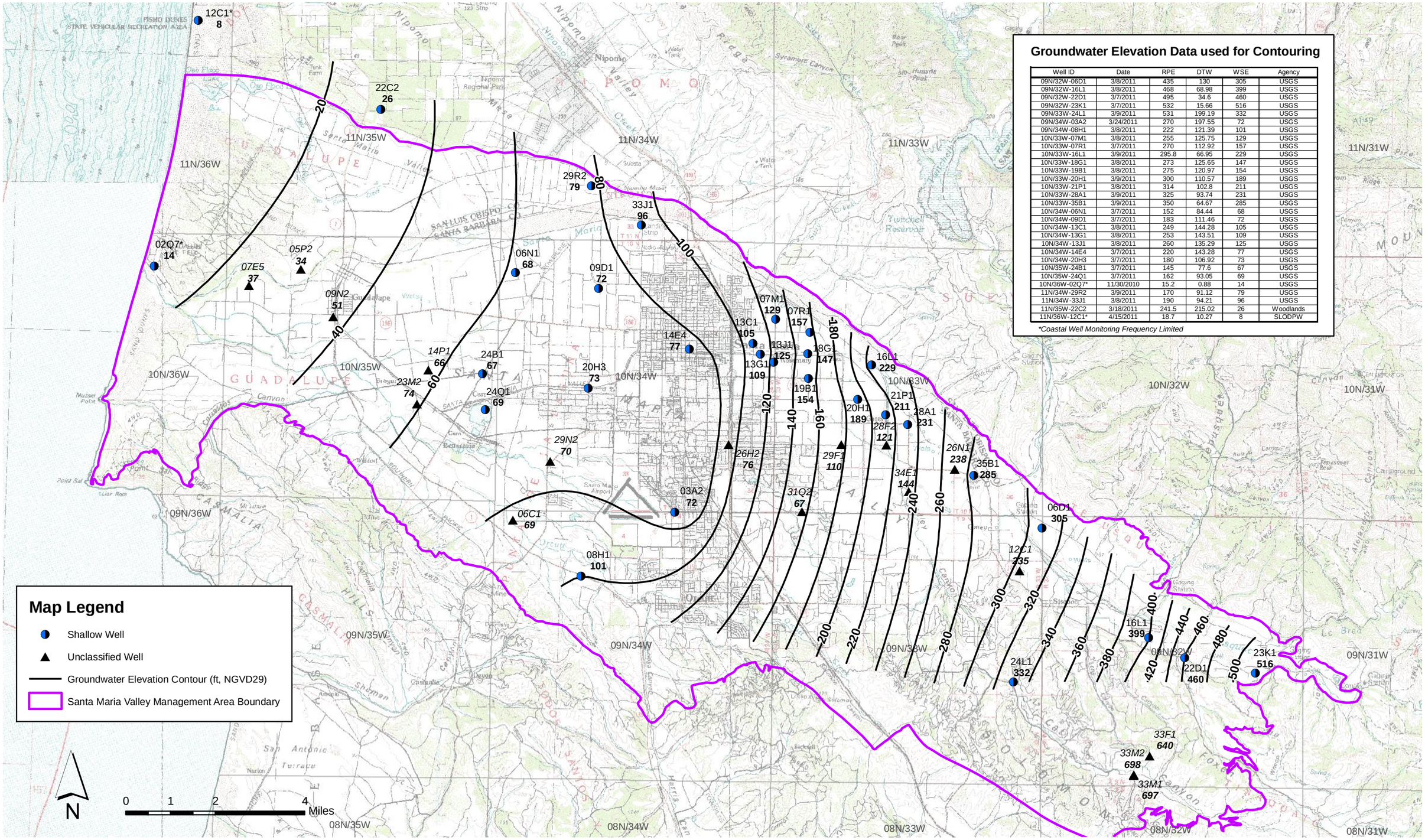

Groundwater Elevation Data used for Contouring

Well ID	Date	RPE	DTW	WSE	Agency
09N/32W-06D1	3/8/2011	435	130	305	USGS
09N/32W-16L1	3/8/2011	468	68.98	399	USGS
09N/32W-22D1	3/7/2011	495	34.6	460	USGS
09N/32W-23K1	3/7/2011	532	15.66	516	USGS
09N/33W-24L1	3/9/2011	531	199.19	332	USGS
09N/34W-03A2	3/24/2011	270	197.55	72	USGS
09N/34W-08H1	3/8/2011	222	121.39	101	USGS
10N/33W-07M1	3/8/2011	255	125.75	129	USGS
10N/33W-07R1	3/7/2011	270	112.92	157	USGS
10N/33W-16L1	3/9/2011	295.8	66.95	229	USGS
10N/33W-18G1	3/8/2011	273	125.65	147	USGS
10N/33W-19B1	3/8/2011	275	120.97	154	USGS
10N/33W-20H1	3/9/2011	300	110.57	189	USGS
10N/33W-21P1	3/8/2011	314	102.8	211	USGS
10N/33W-28A1	3/9/2011	325	93.74	231	USGS
10N/33W-35B1	3/9/2011	350	64.67	285	USGS
10N/34W-06N1	3/7/2011	152	84.44	68	USGS
10N/34W-09D1	3/7/2011	183	111.46	72	USGS
10N/34W-13C1	3/8/2011	249	144.28	105	USGS
10N/34W-13G1	3/8/2011	253	143.51	109	USGS
10N/34W-13J1	3/8/2011	260	135.29	125	USGS
10N/34W-14E4	3/7/2011	220	143.28	77	USGS
10N/34W-20H3	3/7/2011	180	106.92	73	USGS
10N/35W-24B1	3/7/2011	145	77.6	67	USGS
10N/35W-24Q1	3/7/2011	162	93.05	69	USGS
10N/36W-02Q7*	11/30/2010	15.2	0.88	14	USGS
11N/34W-29R2	3/9/2011	170	91.12	79	USGS
11N/34W-33J1	3/8/2011	190	94.21	96	USGS
11N/35W-22C2	3/18/2011	241.5	215.02	26	Woodlands
11N/36W-12C1*	4/15/2011	18.7	10.27	8	SLODPW

Coastal Well Monitoring Frequency Limited

LUHDORFF & SCALMANINI CONSULTING ENGINEERS

Figure 2.1-3a
Contours of Equal Groundwater Elevation, Shallow Zone, Early Spring (March 7 - 24) 2011
Santa Maria Valley Management Area

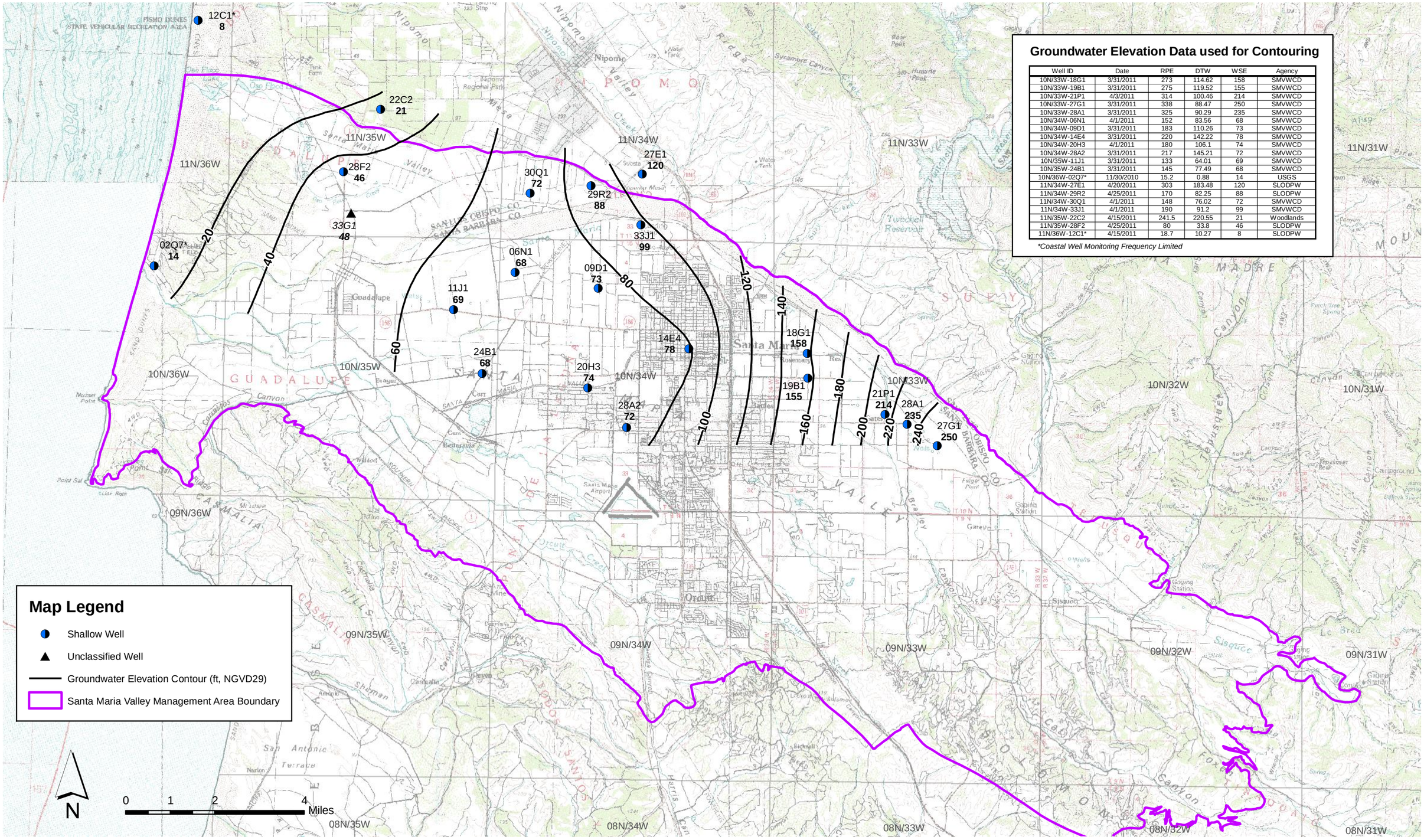

Groundwater Elevation Data used for Contouring

Well ID	Date	RPE	DTW	WSE	Agency
10N/33W-18G1	3/31/2011	273	114.62	158	SMVWCD
10N/33W-19B1	3/31/2011	275	119.52	155	SMVWCD
10N/33W-21P1	4/3/2011	314	100.46	214	SMVWCD
10N/33W-27G1	3/31/2011	338	88.47	250	SMVWCD
10N/33W-28A1	3/31/2011	325	90.29	235	SMVWCD
10N/34W-06N1	4/1/2011	152	83.56	68	SMVWCD
10N/34W-09D1	3/31/2011	183	110.26	73	SMVWCD
10N/34W-14E4	3/31/2011	220	142.22	78	SMVWCD
10N/34W-20H3	4/1/2011	180	106.1	74	SMVWCD
10N/34W-28A2	3/31/2011	217	145.21	72	SMVWCD
10N/35W-11J1	3/31/2011	133	64.01	69	SMVWCD
10N/35W-24B1	3/31/2011	145	77.49	68	SMVWCD
10N/36W-02Q7*	11/30/2010	15.2	0.88	14	USGS
11N/34W-27E1	4/20/2011	303	183.48	120	SLODPW
11N/34W-29R2	4/25/2011	170	82.25	88	SLODPW
11N/34W-30Q1	4/1/2011	148	76.02	72	SMVWCD
11N/34W-33J1	4/1/2011	190	91.2	99	SMVWCD
11N/35W-22C2	4/15/2011	241.5	220.55	21	Woodlands
11N/35W-28F2	4/25/2011	80	33.8	46	SLODPW
11N/36W-12C1*	4/15/2011	18.7	10.27	8	SLODPW

Coastal Well Monitoring Frequency Limited

LUHDORFF & SCALMANINI CONSULTING ENGINEERS

Figure 2.1-3b
Contours of Equal Groundwater Elevation, Shallow Zone, Late Spring (March 31 - April 25) 2011
Santa Maria Valley Management Area

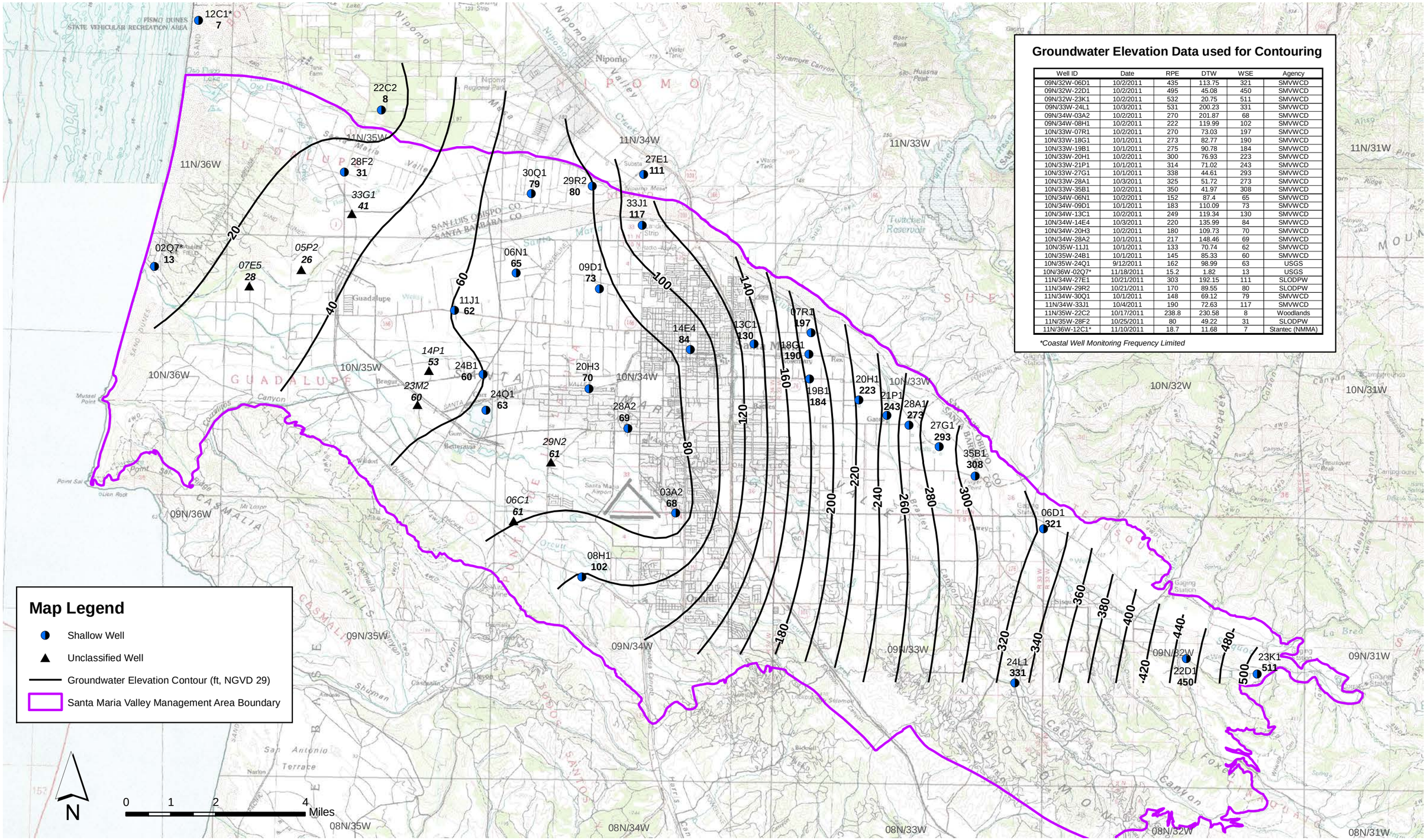

Groundwater Elevation Data used for Contouring

Well ID	Date	RPE	DTW	WSE	Agency
09N/32W-06D1	10/2/2011	435	113.75	321	SMVWCD
09N/32W-22D1	10/2/2011	495	45.08	450	SMVWCD
09N/32W-23K1	10/2/2011	532	20.75	511	SMVWCD
09N/33W-24L1	10/3/2011	531	200.23	331	SMVWCD
09N/34W-03A2	10/2/2011	270	201.87	68	SMVWCD
09N/34W-08H1	10/2/2011	222	119.99	102	SMVWCD
10N/33W-07R1	10/2/2011	270	73.03	197	SMVWCD
10N/33W-18G1	10/1/2011	273	82.77	190	SMVWCD
10N/33W-19B1	10/1/2011	275	90.78	184	SMVWCD
10N/33W-20H1	10/2/2011	300	76.93	223	SMVWCD
10N/33W-21P1	10/1/2011	314	71.02	243	SMVWCD
10N/33W-27G1	10/1/2011	338	44.61	293	SMVWCD
10N/33W-28A1	10/3/2011	325	51.72	273	SMVWCD
10N/33W-35B1	10/2/2011	350	41.97	308	SMVWCD
10N/34W-06N1	10/2/2011	152	87.4	65	SMVWCD
10N/34W-09D1	10/1/2011	183	110.09	73	SMVWCD
10N/34W-13C1	10/2/2011	249	119.34	130	SMVWCD
10N/34W-14E4	10/3/2011	220	135.99	84	SMVWCD
10N/34W-20H3	10/2/2011	180	109.73	70	SMVWCD
10N/34W-28A2	10/1/2011	217	148.46	69	SMVWCD
10N/35W-11J1	10/1/2011	133	70.74	62	SMVWCD
10N/35W-24B1	10/1/2011	145	85.33	60	SMVWCD
10N/35W-24Q1	9/12/2011	162	98.99	63	USGS
10N/36W-02Q7*	11/18/2011	15.2	1.82	13	USGS
11N/34W-27E1	10/21/2011	303	192.15	111	SLODPW
11N/34W-29R2	10/21/2011	170	89.55	80	SLODPW
11N/34W-30Q1	10/1/2011	148	69.12	79	SMVWCD
11N/34W-33J1	10/4/2011	190	72.63	117	SMVWCD
11N/35W-22C2	10/17/2011	238.8	230.58	8	Woodlands
11N/35W-28F2	10/25/2011	80	49.22	31	SLODPW
11N/36W-12C1*	11/10/2011	18.7	11.68	7	Stantec (NMMA)

*Coastal Well Monitoring Frequency Limited

LUHDORFF & SCALMANINI CONSULTING ENGINEERS

Figure 2.1-3c
Contours of Equal Groundwater Elevation, Shallow Zone, Fall (September 12 - October 25) 2011
Santa Maria Valley Management Area

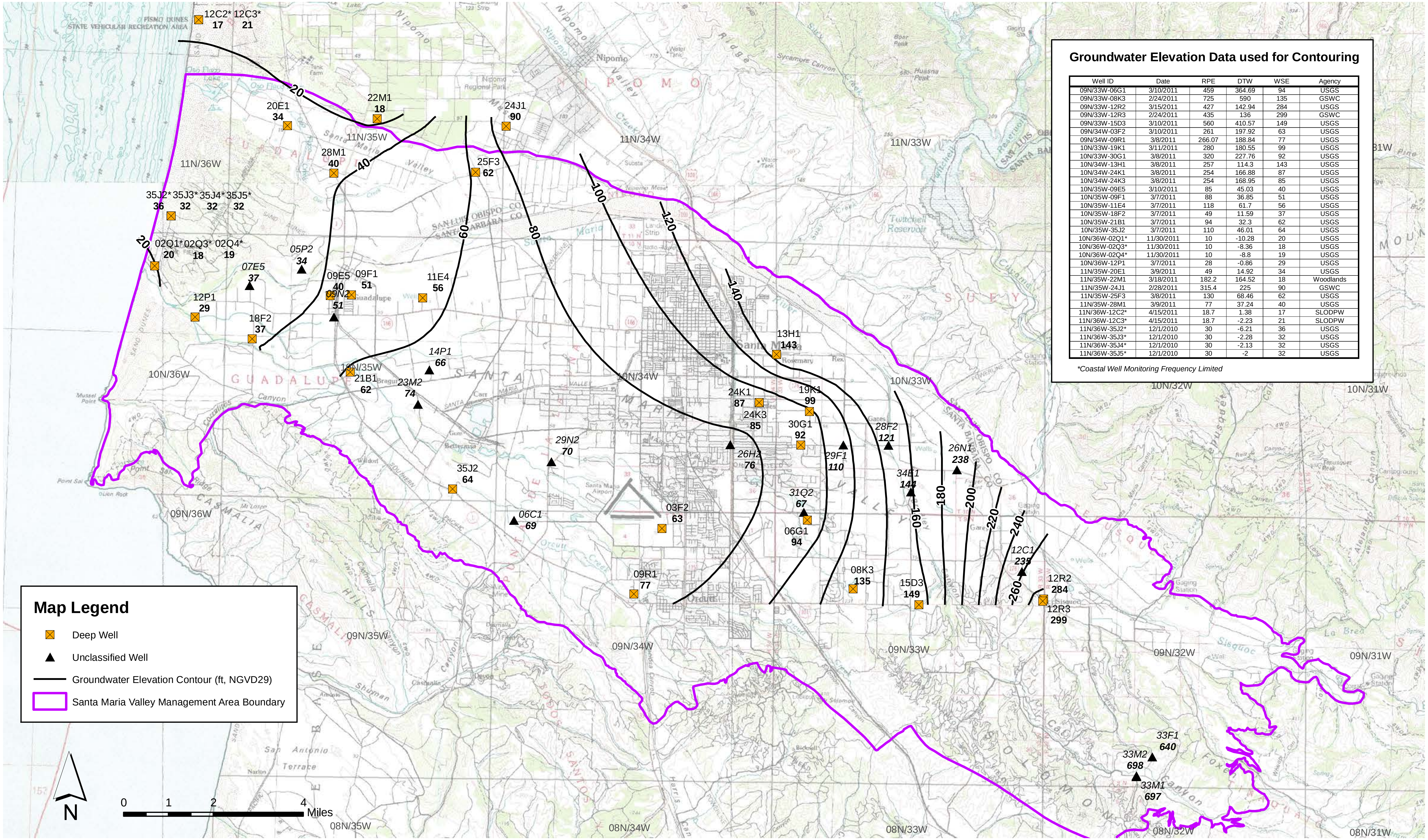

Groundwater Elevation Data used for Contouring

Well ID	Date	RPE	DTW	WSE	Agency
09N/33W-06G1	3/10/2011	459	364.69	94	USGS
09N/33W-08K3	2/24/2011	725	590	135	GSWC
09N/33W-12R2	3/15/2011	427	142.94	284	USGS
09N/33W-12R3	2/24/2011	435	136	299	GSWC
09N/33W-15D3	3/10/2011	560	410.57	149	USGS
09N/34W-03F2	3/10/2011	261	197.92	63	USGS
09N/34W-09R1	3/8/2011	266.07	188.84	77	USGS
10N/33W-19K1	3/11/2011	280	180.55	99	USGS
10N/33W-30G1	3/8/2011	320	227.76	92	USGS
10N/34W-13H1	3/8/2011	257	114.3	143	USGS
10N/34W-24K1	3/8/2011	254	166.88	87	USGS
10N/34W-24K3	3/8/2011	254	168.95	85	USGS
10N/35W-09E5	3/10/2011	85	45.03	40	USGS
10N/35W-09F1	3/7/2011	88	36.85	51	USGS
10N/35W-11E4	3/7/2011	118	61.7	56	USGS
10N/35W-18F2	3/7/2011	49	11.59	37	USGS
10N/35W-21B1	3/7/2011	94	32.3	62	USGS
10N/35W-35J2	3/7/2011	110	46.01	64	USGS
10N/36W-02Q1*	11/30/2011	10	-10.28	20	USGS
10N/36W-02Q3*	11/30/2011	10	-8.36	18	USGS
10N/36W-02Q4*	11/30/2011	10	-8.8	19	USGS
10N/36W-12P1	3/7/2011	28	-0.86	29	USGS
11N/35W-20E1	3/9/2011	49	14.92	34	USGS
11N/35W-22M1	3/18/2011	182.2	164.52	18	Woodlands
11N/35W-24J1	2/28/2011	315.4	225	90	GSWC
11N/35W-25F3	3/8/2011	130	68.46	62	USGS
11N/35W-28M1	3/9/2011	77	37.24	40	USGS
11N/36W-12C2*	4/15/2011	18.7	1.38	17	SLODPW
11N/36W-12C3*	4/15/2011	18.7	-2.23	21	SLODPW
11N/36W-35J2*	12/1/2010	30	-6.21	36	USGS
11N/36W-35J3*	12/1/2010	30	-2.28	32	USGS
11N/36W-35J4*	12/1/2010	30	-2.13	32	USGS
11N/36W-35J5*	12/1/2010	30	-2	32	USGS

**Coastal Well Monitoring Frequency Limited*

LUHDORFF & SCALMANINI CONSULTING ENGINEERS

Figure 2.1-3d
Contours of Equal Groundwater Elevation, Deep Zone, Early Spring (February 24 - March 18) 2011
Santa Maria Valley Management Area

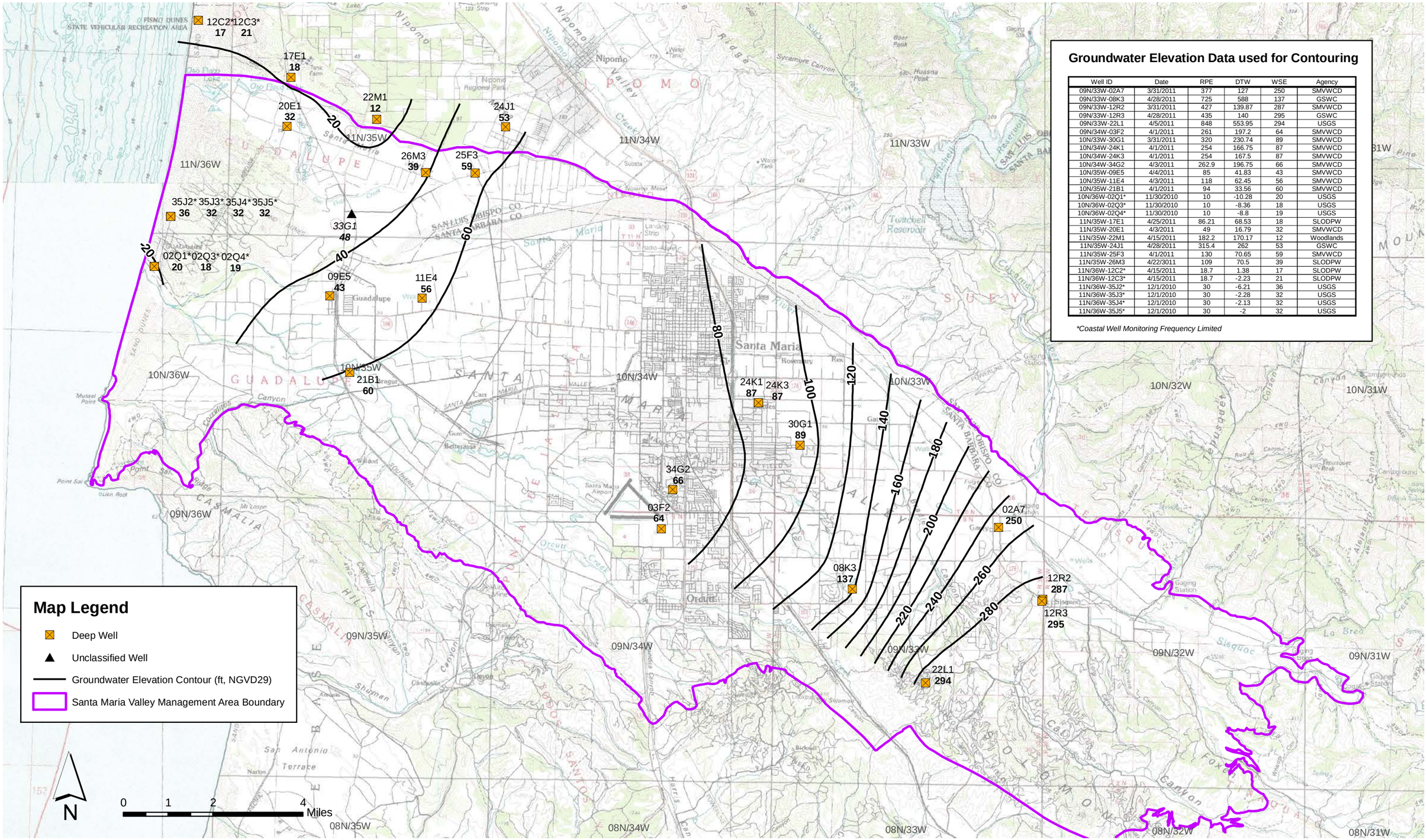

Groundwater Elevation Data used for Contouring

Well ID	Date	RPE	DTW	WSE	Agency
09N/33W-02A7	3/31/2011	377	127	250	SMVWCD
09N/33W-08K3	4/28/2011	725	588	137	GSWC
09N/33W-12R2	3/31/2011	427	139.87	287	SMVWCD
09N/33W-12R3	4/28/2011	435	140	295	GSWC
09N/33W-22L1	4/5/2011	848	553.95	294	USGS
09N/34W-03F2	4/1/2011	261	197.2	64	SMVWCD
10N/33W-30G1	3/31/2011	320	230.74	89	SMVWCD
10N/34W-24K1	4/1/2011	254	166.75	87	SMVWCD
10N/34W-24K3	4/1/2011	254	167.5	87	SMVWCD
10N/34W-34G2	4/3/2011	262.9	196.75	66	SMVWCD
10N/35W-09E5	4/4/2011	85	41.83	43	SMVWCD
10N/35W-11E4	4/3/2011	118	62.45	56	SMVWCD
10N/35W-21B1	4/1/2011	94	33.56	60	SMVWCD
10N/36W-02Q1*	11/30/2010	10	-10.28	20	USGS
10N/36W-02Q3*	11/30/2010	10	-8.36	18	USGS
10N/36W-02Q4*	11/30/2010	10	-8.8	19	USGS
11N/35W-17E1	4/25/2011	86.21	68.53	18	SLODPW
11N/35W-20E1	4/3/2011	49	16.79	32	SMVWCD
11N/35W-22M1	4/15/2011	182.2	170.17	12	Woodlands
11N/35W-24J1	4/28/2011	315.4	262	53	GSWC
11N/35W-25F3	4/1/2011	130	70.65	59	SMVWCD
11N/35W-26M3	4/22/3011	109	70.5	39	SLODPW
11N/36W-12C2*	4/15/2011	18.7	1.38	17	SLODPW
11N/36W-12C3*	4/15/2011	18.7	-2.23	21	SLODPW
11N/36W-35J2*	12/1/2010	30	-6.21	36	USGS
11N/36W-35J3*	12/1/2010	30	-2.28	32	USGS
11N/36W-35J4*	12/1/2010	30	-2.13	32	USGS
11N/36W-35J5*	12/1/2010	30	-2	32	USGS

Coastal Well Monitoring Frequency Limited

LUHDORFF & SCALMANINI CONSULTING ENGINEERS

Figure 2.1-3e
Contours of Equal Groundwater Elevation, Deep Zone, Late Spring (March 31 - April 28) 2011
Santa Maria Valley Management Area

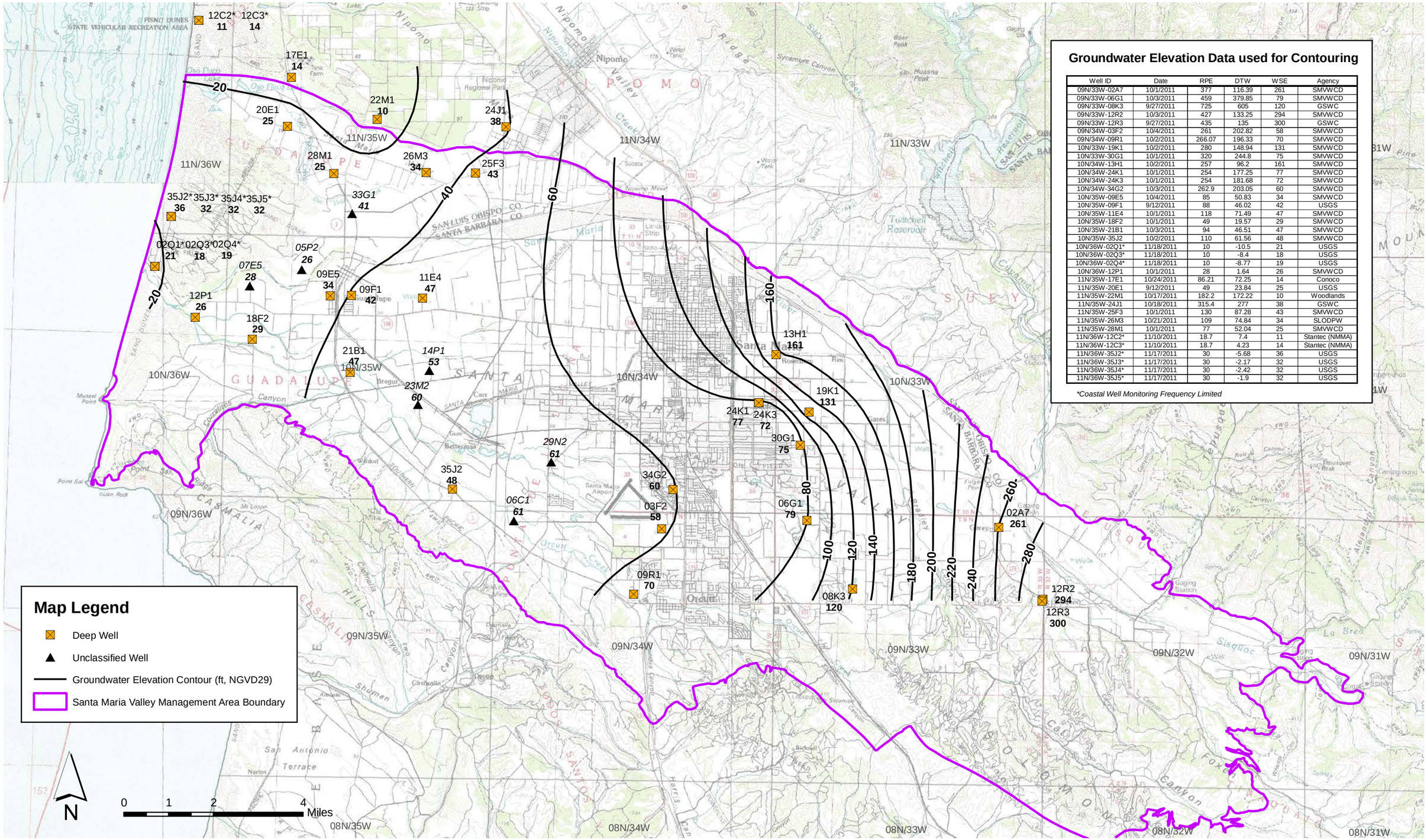

Groundwater Elevation Data used for Contouring

Well ID	Date	RPE	DTW	WSE	Agency
09N/33W-02A7	10/1/2011	377	116.39	261	SMVWCD
09N/33W-06G1	10/3/2011	459	379.85	79	SMVWCD
09N/33W-08K3	9/27/2011	725	605	120	GSWC
09N/33W-12R2	10/3/2011	427	133.25	294	SMVWCD
09N/33W-12R3	9/27/2011	435	135	300	GSWC
09N/34W-03F2	10/4/2011	261	202.82	58	SMVWCD
09N/34W-09R1	10/2/2011	266.07	196.33	70	SMVWCD
10N/33W-19K1	10/2/2011	280	148.94	131	SMVWCD
10N/33W-30G1	10/1/2011	320	244.8	75	SMVWCD
10N/34W-13H1	10/2/2011	257	96.2	161	SMVWCD
10N/34W-24K1	10/1/2011	254	177.25	77	SMVWCD
10N/34W-24K3	10/1/2011	254	181.68	72	SMVWCD
10N/34W-34G2	10/3/2011	262.9	203.05	60	SMVWCD
10N/35W-09E5	10/4/2011	85	50.83	34	SMVWCD
10N/35W-09F1	9/12/2011	88	46.02	42	USGS
10N/35W-11E4	10/1/2011	118	71.49	47	SMVWCD
10N/35W-18F2	10/1/2011	49	19.57	29	SMVWCD
10N/35W-21B1	10/3/2011	94	46.51	47	SMVWCD
10N/35W-35J2	10/2/2011	110	61.56	48	SMVWCD
10N/36W-02Q1*	11/18/2011	10	-10.5	21	USGS
10N/36W-02Q3*	11/18/2011	10	-8.4	18	USGS
10N/36W-02Q4*	11/18/2011	10	-8.77	19	USGS
10N/36W-12P1	10/1/2011	28	1.64	26	SMVWCD
11N/35W-17E1	10/24/2011	86.21	72.25	14	Conoco
11N/35W-20E1	9/12/2011	49	23.84	25	USGS
11N/35W-22M1	10/17/2011	182.2	172.22	10	Woodlands
11N/35W-24J1	10/18/2011	315.4	277	38	GSWC
11N/35W-25F3	10/1/2011	130	87.28	43	SMVWCD
11N/35W-26M3	10/21/2011	109	74.84	34	SLODPW
11N/35W-28M1	10/1/2011	77	52.04	25	SMVWCD
11N/36W-12C2*	11/10/2011	18.7	7.4	11	Stantec (NMMA)
11N/36W-12C3*	11/10/2011	18.7	4.23	14	Stantec (NMMA)
11N/36W-35J2*	11/17/2011	30	-5.68	36	USGS
11N/36W-35J3*	11/17/2011	30	-2.17	32	USGS
11N/36W-35J4*	11/17/2011	30	-2.42	32	USGS
11N/36W-35J5*	11/17/2011	30	-1.9	32	USGS

*Coastal Well Monitoring Frequency Limited

LUHDORFF & SCALMANINI CONSULTING ENGINEERS

Figure 2.1-3f
Contours of Equal Groundwater Elevation, Deep Zone, Fall (September 12 - October 24) 2011
Santa Maria Valley Management Area

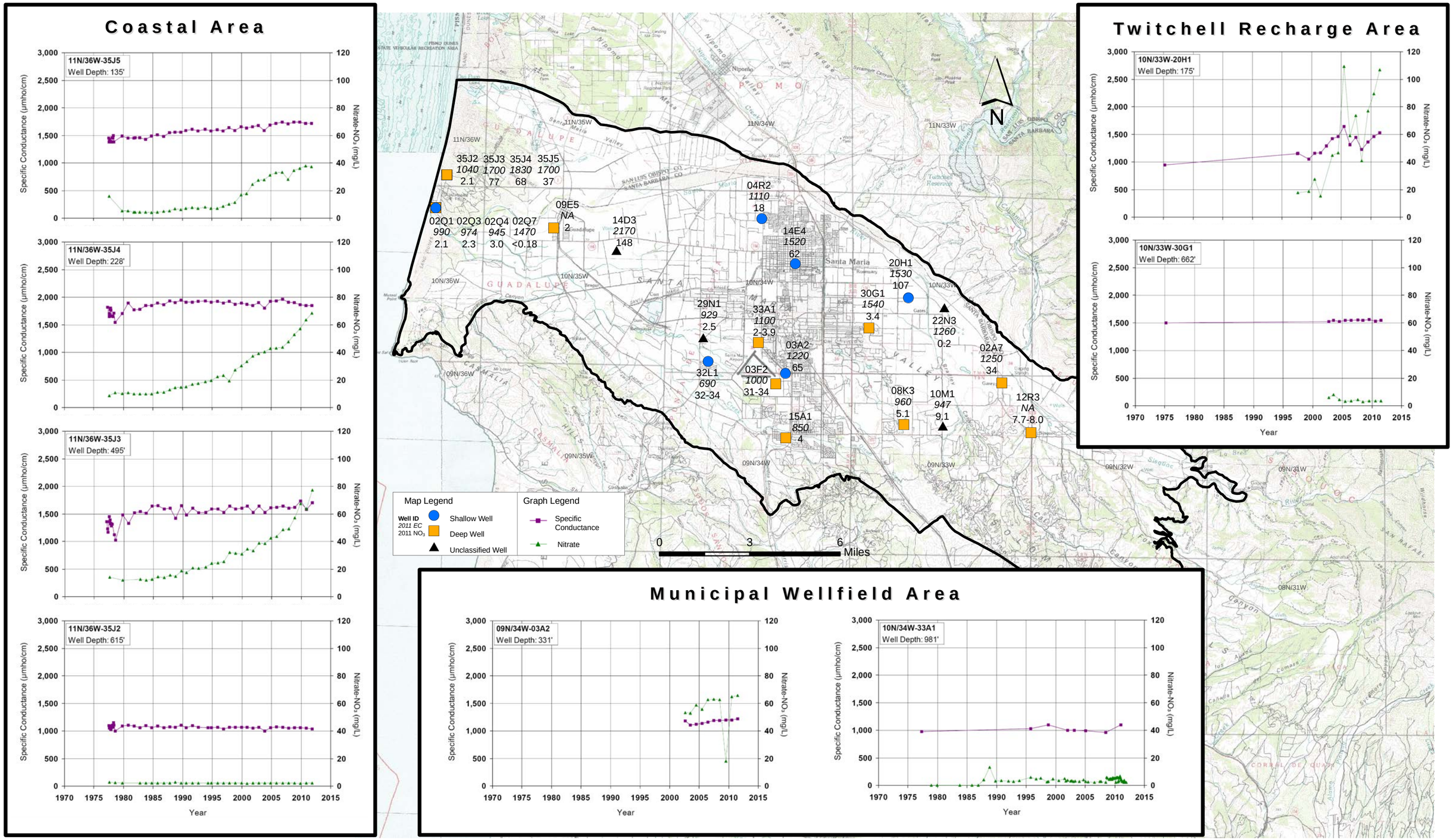

LUHDORFF & SCALMANINI CONSULTING ENGINEERS

Figure 2.1-4
Historical Groundwater Quality
Santa Maria Valley Management Area

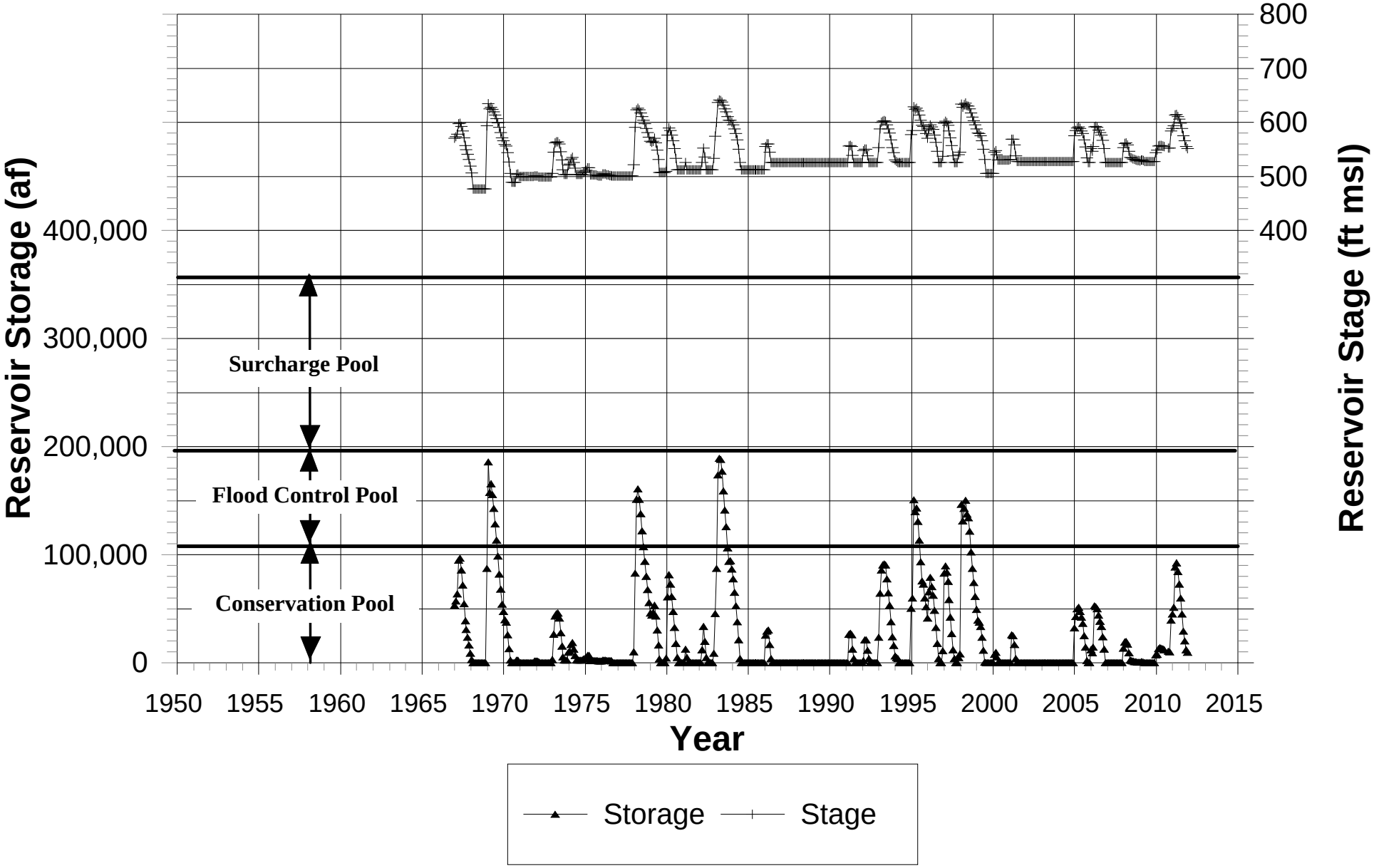

LUHDORFF & SCALMANINI
CONSULTING ENGINEERS

Figure 2.2-1a
Historical Stage and Storage, Twitchell Reservoir
Santa Maria Valley Management Area

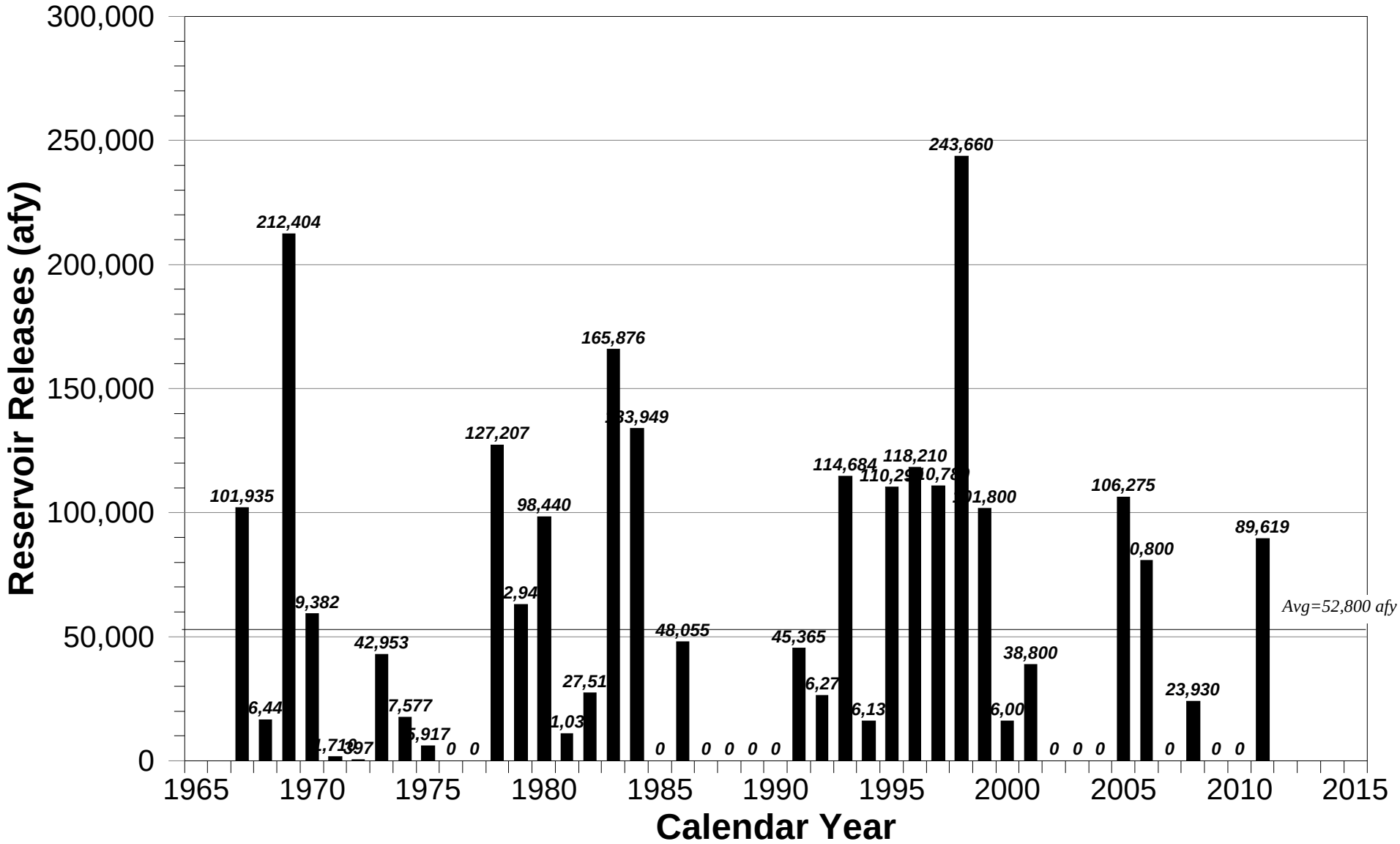

LUHDORFF & SCALMANINI
CONSULTING ENGINEERS

Figure 2.2-1b
Historical Releases, Twitchell Reservoir
Santa Maria Valley Management Area

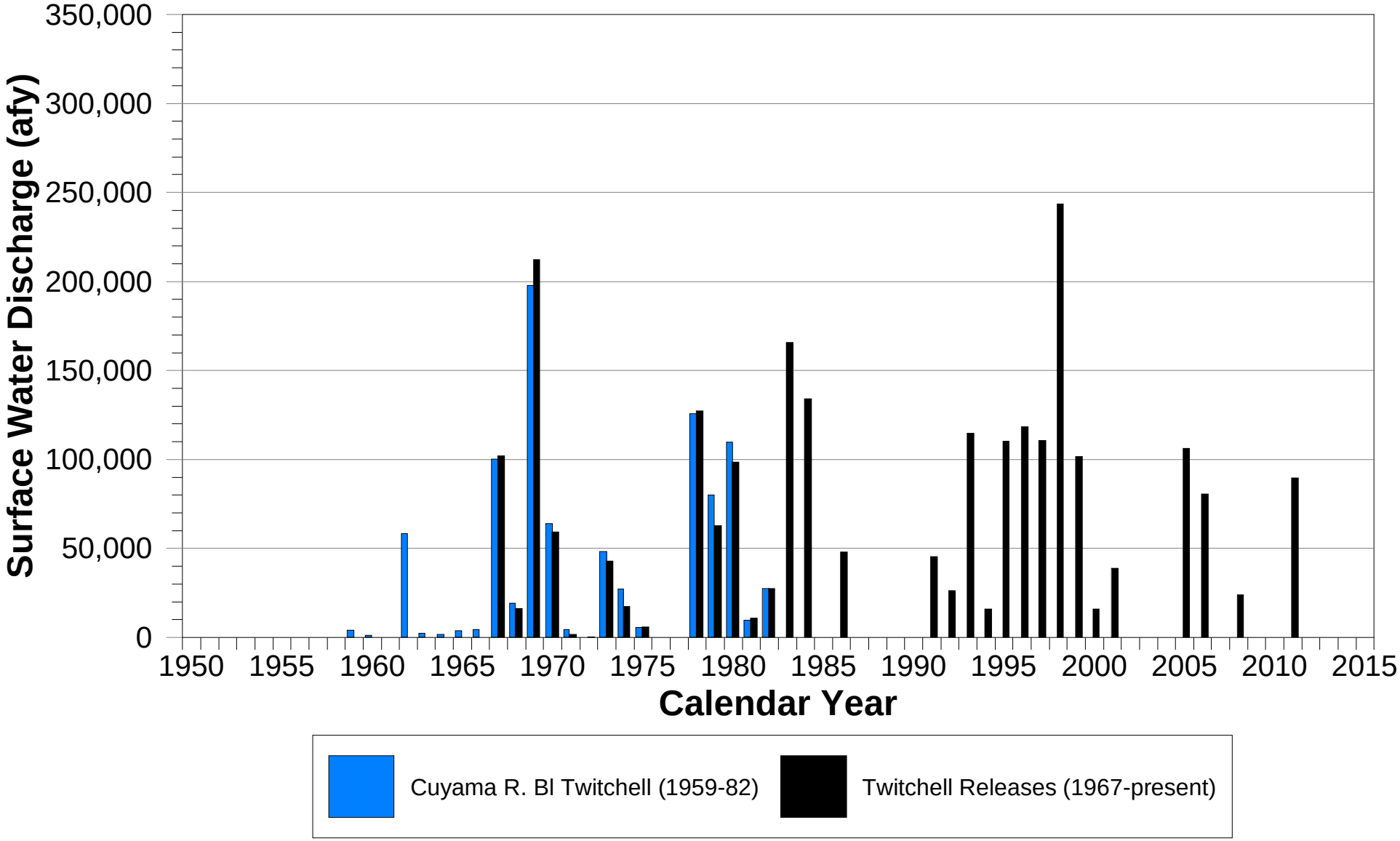

LUHDORFF & SCALMANINI
CONSULTING ENGINEERS

Figure 2.3-1a
Historical Discharge, Cuyama River, and Twitchell Reservoir Releases
Santa Maria Valley Management Area

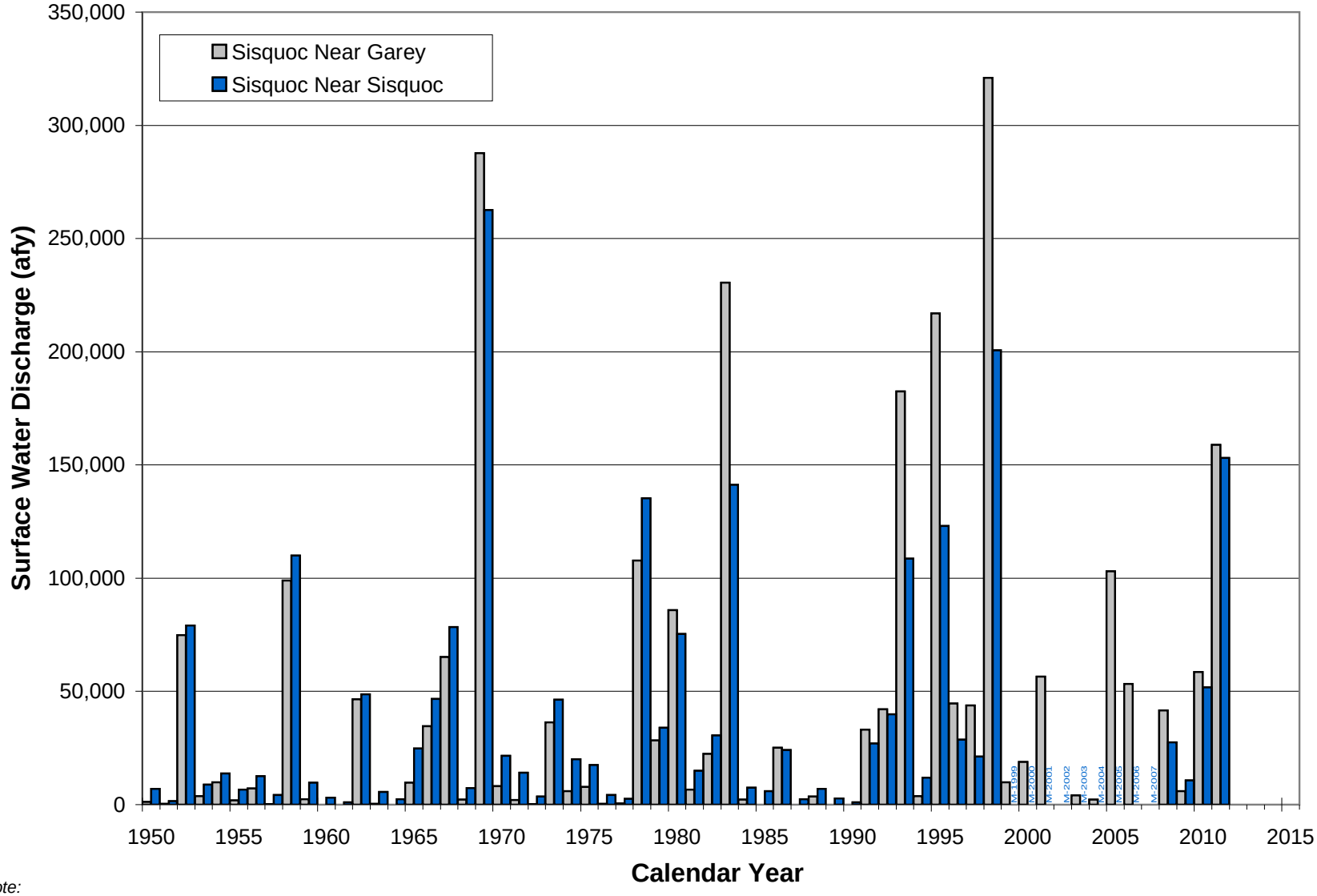

Note:
The annual total discharge is comprised of daily data for the respective 'Near Sisquoc' and 'Near Garey' Gauges; these daily data have been approved by the USGS through Sep 2010 and remain in provisional status Oct 2010 through Dec 2011.
Discharge data are unavailable for the 'Near Sisquoc' Gauge from 1999-2007; missing years are labeled with a 'M - yyyy' notation.

LUHDORFF & SCALMANINI
CONSULTING ENGINEERS

Figure 2.3-1b
Historical Stream Discharge, Sisquoc River
Santa Maria Valley Management Area

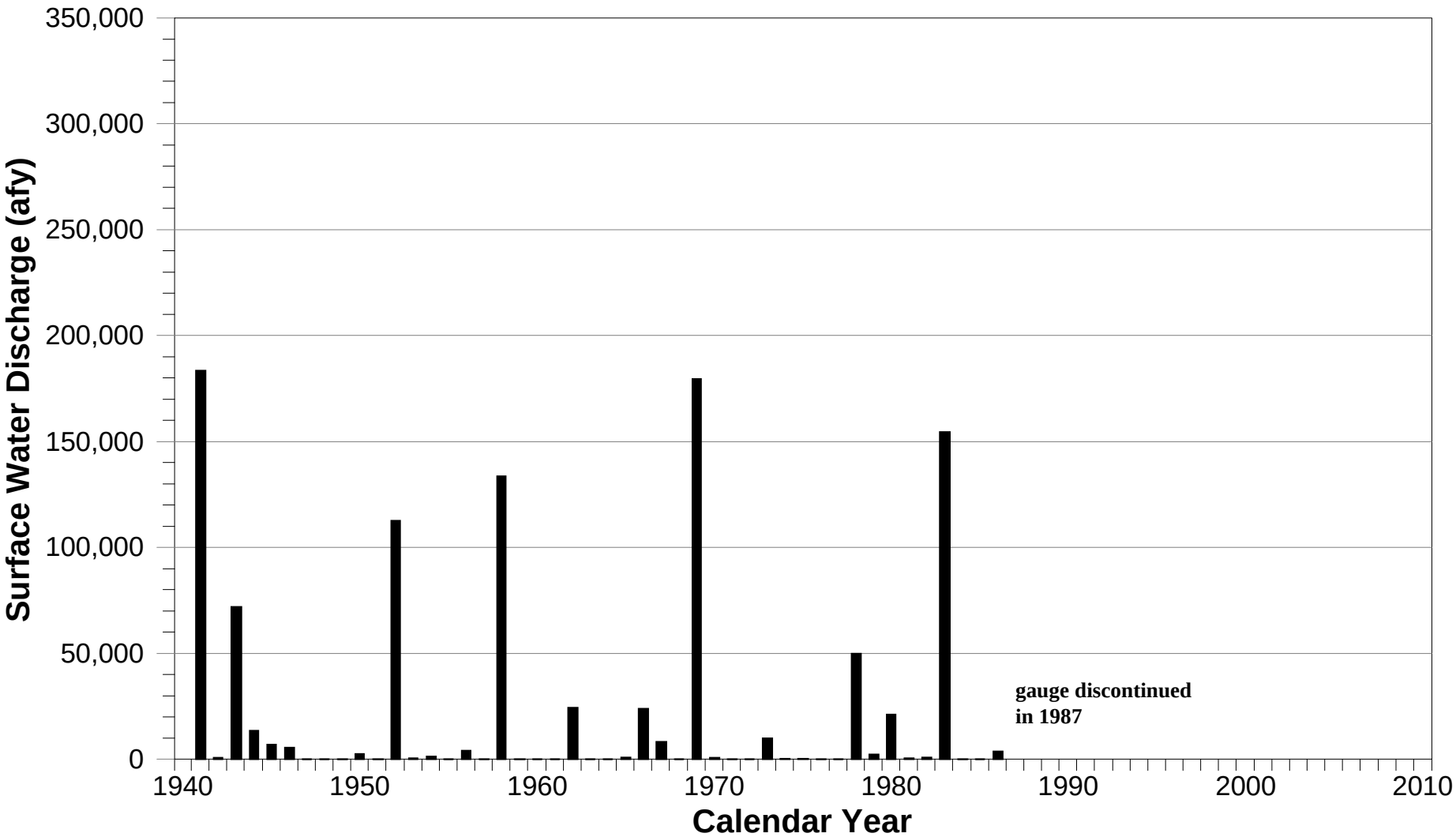

C:\Santa Maria 2008\Annual Report 2008\Fig 2.3-1c SMR Guad.dwg

LUHDORFF & SCALMANINI
CONSULTING ENGINEERS

Figure 2.3-1c
Historical Surface Water Discharge, Santa Maria River at Guadalupe
Santa Maria Valley Management Area

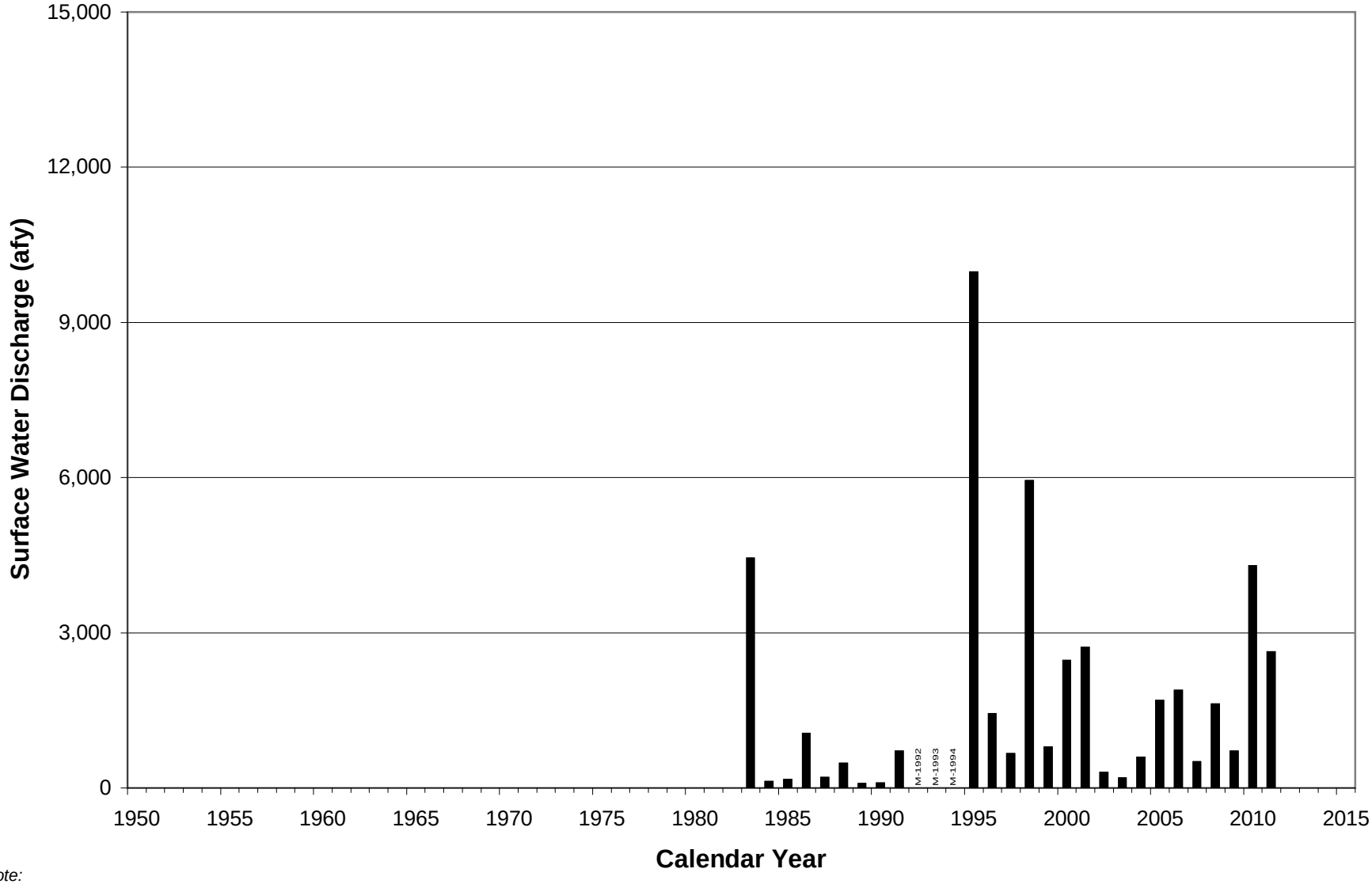

Note:
The annual total discharge is comprised of daily data; these daily data have been approved by the USGS through Sep 2010 and remain in provisional status Oct 2010 through Dec 2011.
Discharge data are unavailable for the 'Orcutt Creek' Gauge from 1992-1994; missing years are labeled with a 'M - yyyy' notation.

LUHDORFF & SCALMANINI
CONSULTING ENGINEERS

Figure 2.3-1d
Historical Stream Discharge, Orcutt Creek
Santa Maria Valley Management Area

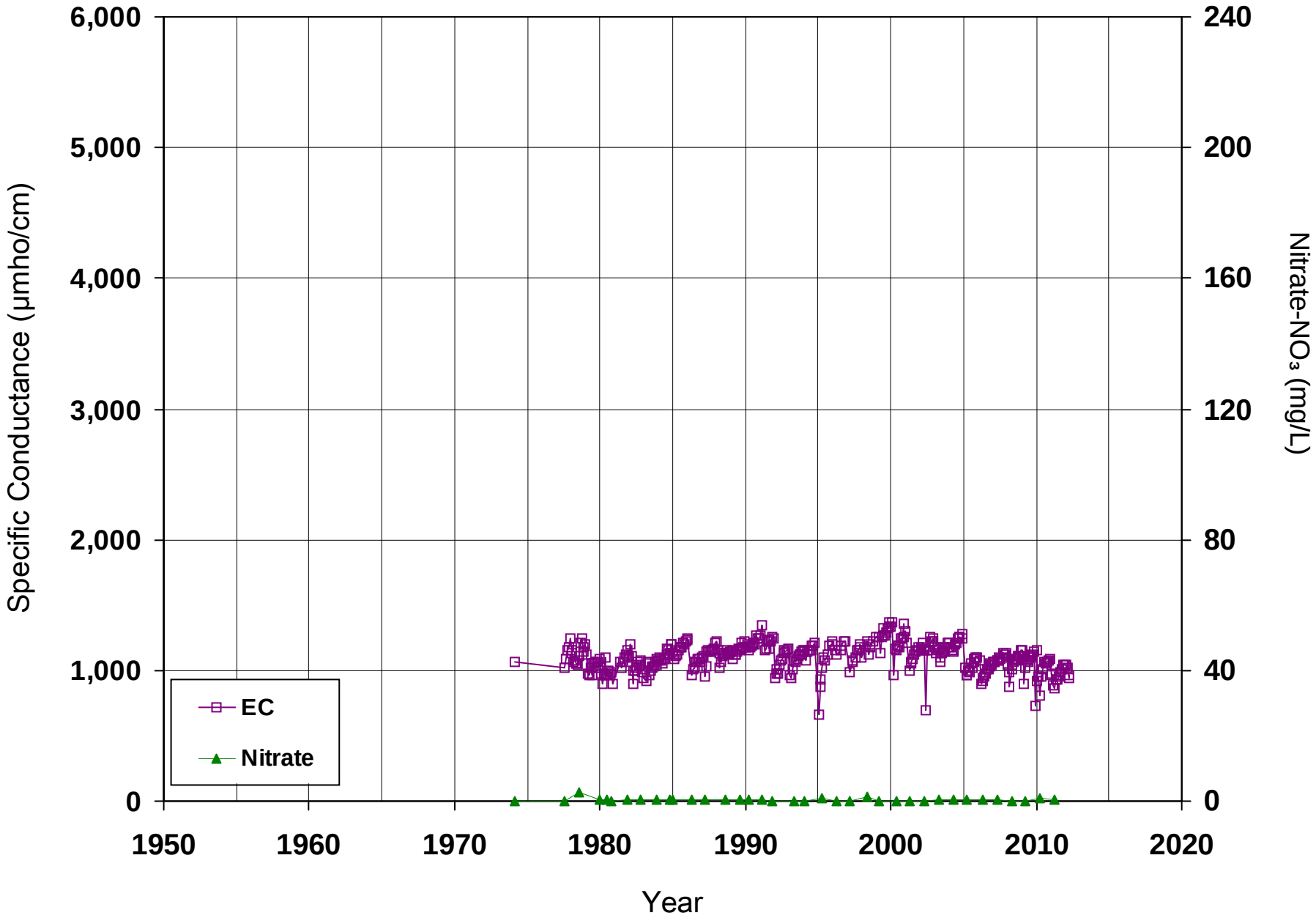

LUHDORFF & SCALMANINI
CONSULTING ENGINEERS

Figure 2.3-2a
Historical Surface Water Quality, Sisquoc River
Santa Maria Valley Management Area

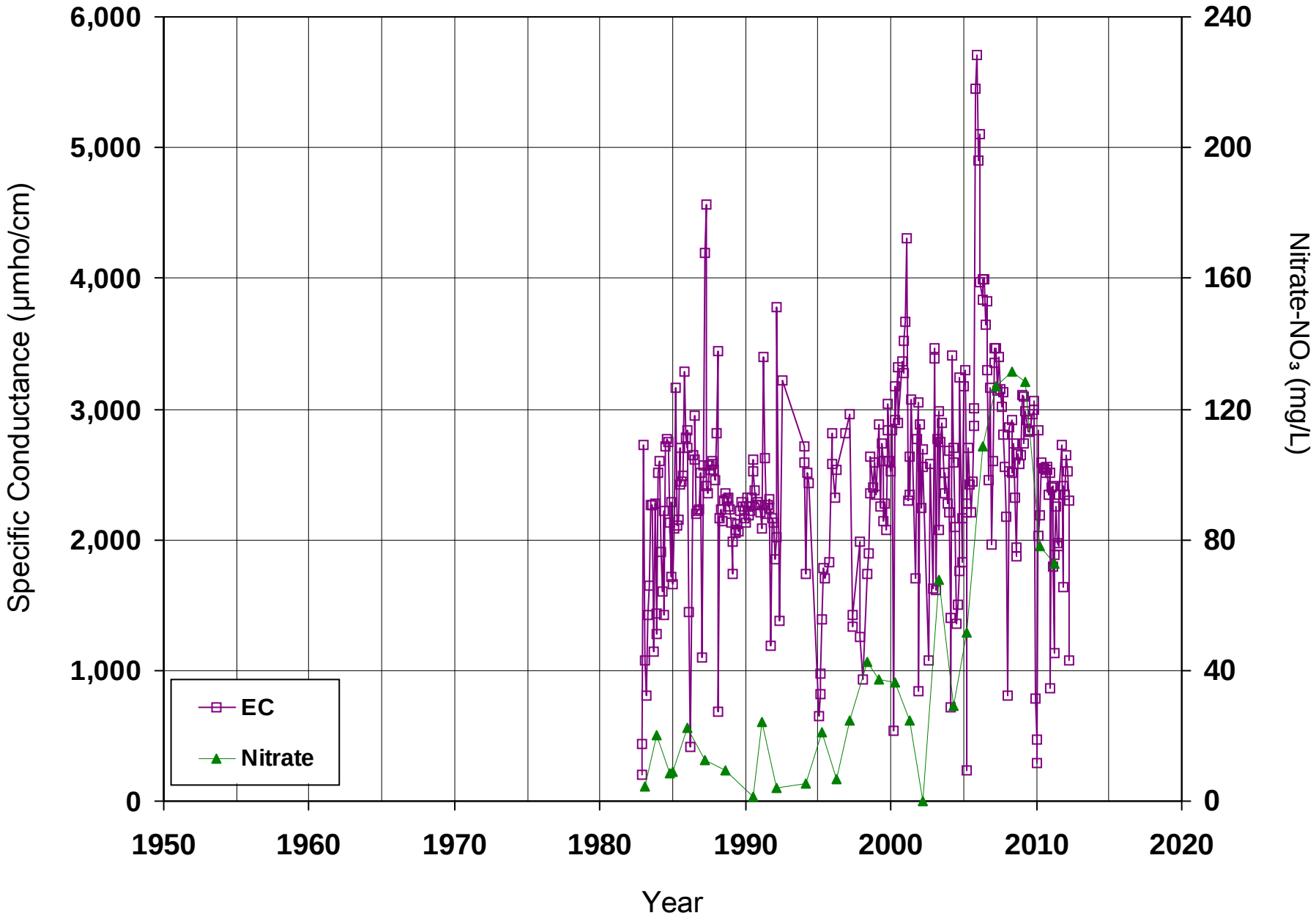

LUHDORFF & SCALMANINI
CONSULTING ENGINEERS

Figure 2.3-2b
Historical Surface Water Quality, Orcutt Creek
Santa Maria Valley Management Area

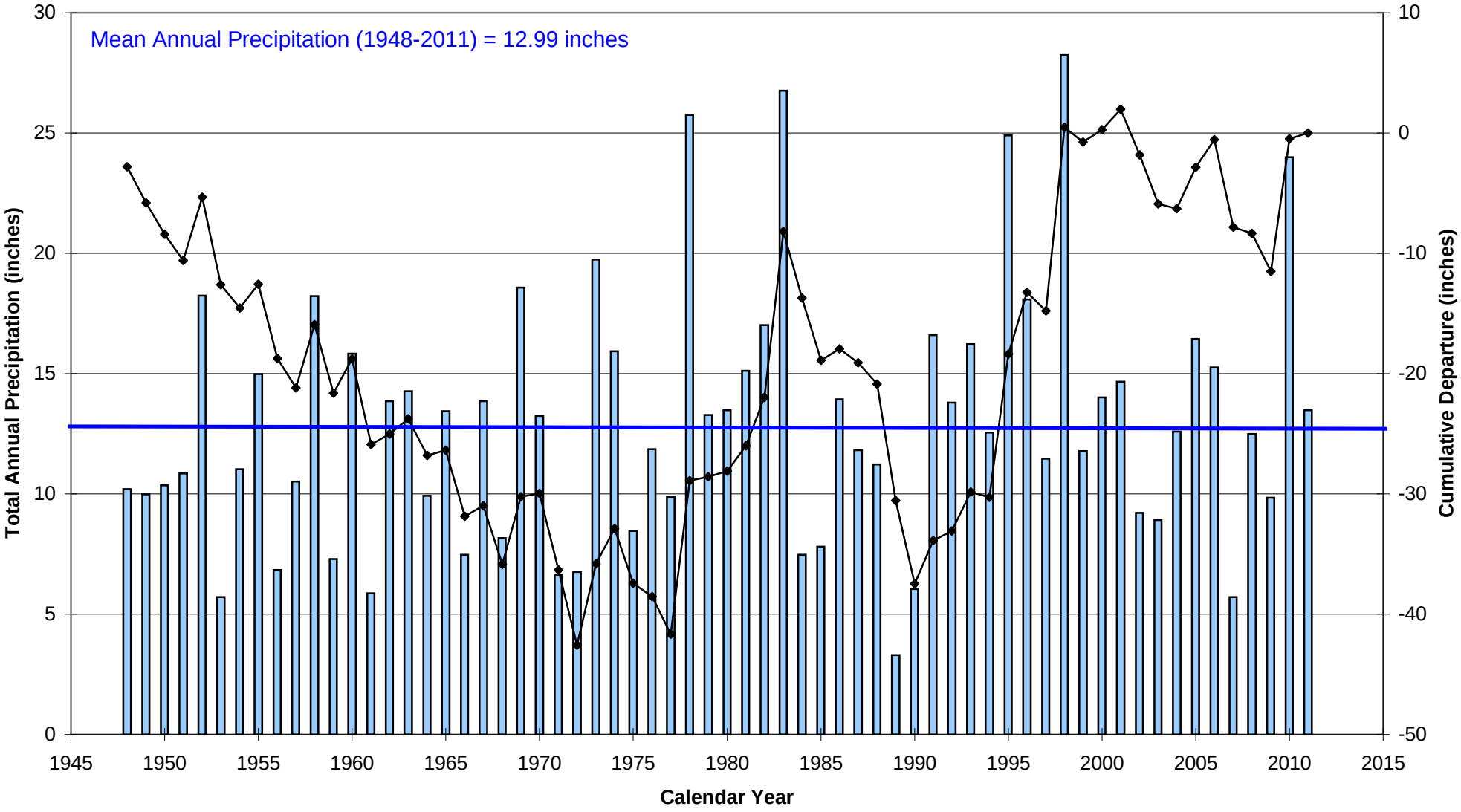

LUHDORFF & SCALMANINI
CONSULTING ENGINEERS

Figure 2.4-1
Historical Precipitation, Santa Maria Airport
Santa Maria Valley Management Area

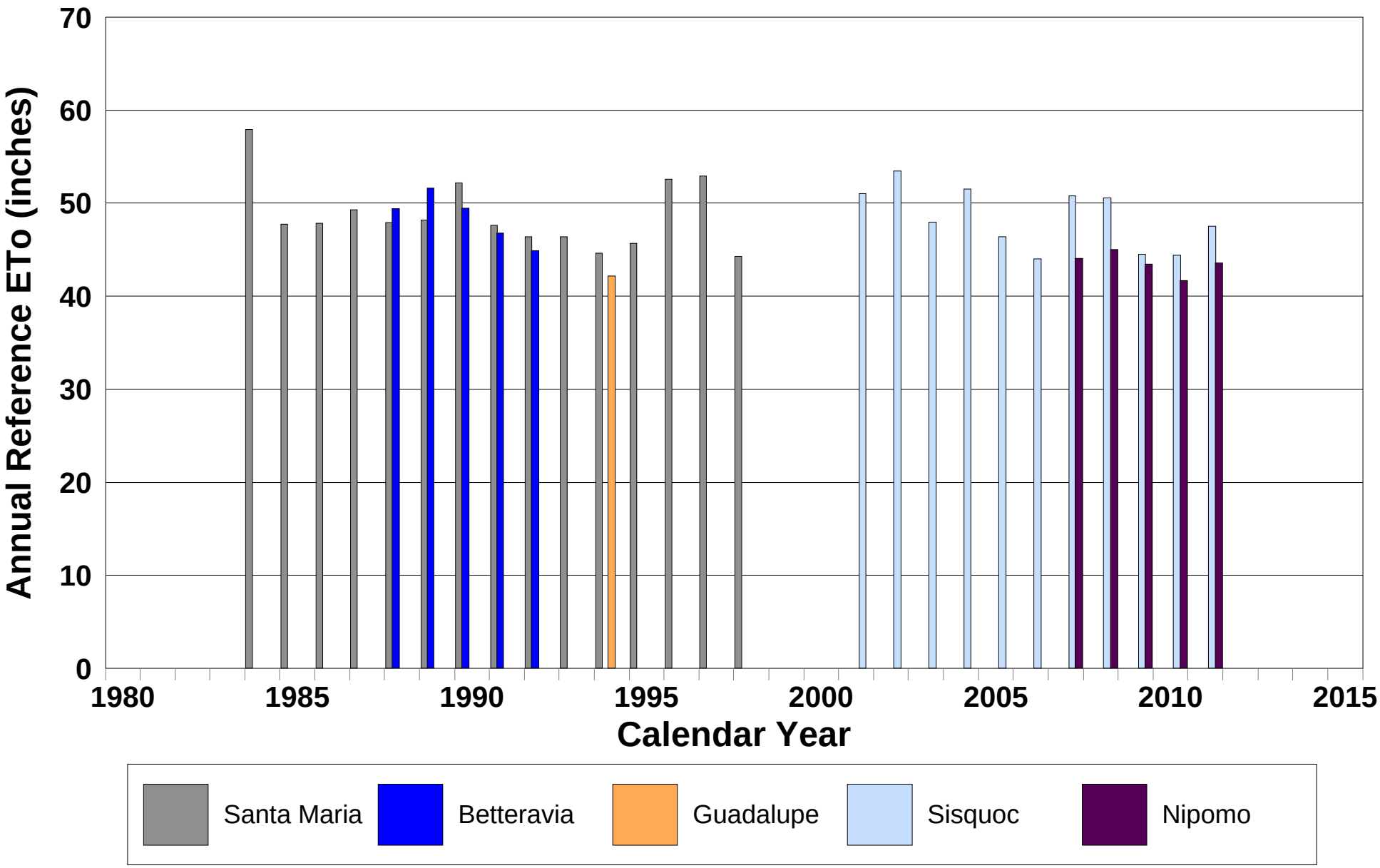

LUHDORFF & SCALMANINI
CONSULTING ENGINEERS

Figure 2.4-2
Historical Reference Evapotranspiration, CIMIS Stations
Santa Maria Valley Management Area

Table 2.4-1
Precipitation Data, 2011, Santa Maria Airport
Santa Maria Valley Management Area
(all values in inches)

Day	January	February	March	April	May	June	July	August	September	October	November	December
1	T	0.00	0.00	0.00	0.00	0.00	0.00	0.00	0.00	0.00	0.00	0.00
2	0.72	0.00	0.05	0.00	0.00	0.00	0.00	0.00	0.00	0.00	0.00	0.00
3	0.00	0.00	0.01	0.00	0.00	0.00	0.00	0.00	0.00	0.04	0.02	0.00
4	0.00	0.00	0.00	0.00	0.00	0.05	0.00	0.00	0.00	0.06	0.05	0.00
5	0.00	0.00	0.00	0.00	0.00	0.15	0.00	0.00	0.00	0.64	0.00	0.00
6	0.00	0.00	0.05	0.00	0.00	0.38	0.00	0.00	0.00	0.01	0.16	0.00
7	0.00	0.00	0.05	0.02	0.00	0.00	0.00	0.00	0.00	0.00	0.00	0.00
8	0.00	0.00	0.00	0.01	T	0.00	0.00	0.00	0.00	0.00	0.00	0.00
9	0.00	0.00	0.00	0.00	0.00	0.00	0.00	0.00	0.00	0.00	0.00	0.00
10	0.00	0.00	0.00	0.00	0.00	0.00	0.00	0.00	0.09	0.00	0.00	0.00
11	0.00	0.00	0.00	0.00	0.00	0.00	0.00	0.00	0.00	0.00	0.43	0.00
12	0.00	0.00	0.00	0.00	0.00	0.00	0.00	0.00	0.00	0.00	0.01	0.14
13	0.00	0.00	0.00	0.00	0.00	0.00	0.00	0.00	0.00	0.00	0.00	T
14	0.00	T	0.00	0.00	0.01	0.00	0.00	0.00	0.00	0.00	0.00	0.00
15	0.00	0.00	0.00	0.00	0.09	0.00	0.00	0.00	0.00	0.00	0.00	0.02
16	0.00	0.31	0.00	0.00	0.07	0.00	0.00	0.00	0.00	0.00	0.00	0.00
17	0.00	T	0.00	0.00	0.12	0.00	0.00	0.00	0.00	0.00	0.00	0.00
18	0.00	1.77	0.21	0.00	0.03	0.00	0.00	0.00	0.00	0.00	0.00	0.00
19	0.00	0.42	0.80	0.00	0.00	0.00	0.00	0.00	0.00	0.00	0.00	0.00
20	0.00	0.03	3.46	0.00	0.00	0.00	0.00	0.00	0.00	0.00	0.83	0.00
21	0.00	0.00	0.05	0.06	0.00	0.00	0.00	0.00	0.00	0.00	0.00	0.00
22	0.00	0.00	T	T	0.00	0.00	0.00	0.00	0.00	0.00	0.00	0.00
23	0.00	0.00	0.49	0.00	0.00	T	0.00	0.00	0.00	0.00	0.00	0.00
24	0.00	0.00	0.32	0.06	0.00	0.00	0.00	0.00	0.00	0.00	0.00	0.00
25	0.00	0.45	0.06	0.00	0.00	0.00	0.00	0.00	0.00	0.00	0.00	0.00
26	0.00	0.02	0.22	0.00	0.00	0.00	0.00	0.00	0.00	0.00	0.00	0.00
27	0.00	0.00	0.00	0.00	0.00	0.00	0.00	0.00	0.00	0.00	0.00	0.00
28	0.00	0.00	0.00	0.00	0.05	0.00	0.00	0.00	0.00	0.00	0.00	0.00
29	0.10		0.00	0.00	0.01	0.01	0.00	0.00	0.00	0.00	0.00	0.00
30	0.26		0.00	0.00	0.00	0.00	T	0.00	0.00	0.00	0.00	0.00
31	0.00		0.00		0.00		0.00	0.00		0.00		0.00
Total	**1.08**	**3.00**	**5.77**	**0.15**	**0.38**	**0.59**	**0.00**	**0.00**	**0.09**	**0.75**	**1.50**	**0.16**

T = Trace amount

Total Precipitation (in) 13.47

Table 2.4-2
Reference Evapotranspiration and Precipitation Data, 2011
Santa Maria Valley Management Area CIMIS Stations

Reference Evapotranspiration (in inches)

	January			February			March			April			May			June		
Day	Sisquoc	Santa Maria II	Nipomo	Sisquoc	Santa Maria II	Nipomo	Sisquoc	Santa Maria II	Nipomo	Sisquoc	Santa Maria II	Nipomo	Sisquoc	Santa Maria II	Nipomo	Sisquoc	Santa Maria II	Nipomo
1	0.05		0.03	0.10		0.09	0.09		0.09	0.20	0.17	0.17	0.22	0.23	0.22	0.20	0.20	0.20
2	0.03		0.02	0.09		0.09	0.04		0.03	0.01	0.01	0.02	0.24	0.23	0.21	0.21	0.21	0.21
3	0.03		0.05	0.09		0.09	0.09		0.10	0.11	0.11	0.13	0.21	0.19	0.20	0.18	0.16	0.15
4	0.06		0.05	0.09		0.08	0.12		0.12	0.18	0.16	0.17	0.24	0.24	0.24	0.06	0.05	0.03
5	0.05		0.06	0.13		0.12	0.13		0.11	0.17	0.15	0.16	0.23	0.22	0.21	0.07	0.10	0.07
6	0.06		0.06	0.12		0.12	0.04		0.03	0.15	0.15	0.15	0.20	0.09	0.16	0.20	0.18	0.18
7	0.05		0.07	0.12		0.10	0.12		0.11	0.07	0.08	0.10	0.15	0.15	0.15	0.18	0.19	0.20
8	0.05		0.06	0.12		0.12	0.14		0.10	0.06	0.13	0.14	0.13	0.18	0.18	0.14	0.14	0.15
9	0.05		0.07	0.13		0.13	0.14		0.13	0.15	0.15	0.16	0.18	0.17	0.19	0.15	0.16	0.17
10	0.05		0.07	0.12		0.13	0.12		0.11	0.16	0.15	0.16	0.19	0.17	0.17	0.13	0.12	0.13
11	0.03		0.03	0.13		0.12	0.09		0.12	0.14	0.14	0.15	0.17	0.14	0.16	0.17	0.16	0.17
12	0.07		0.07	0.14		0.13	0.11		0.11	0.15	0.15	0.16	0.19	0.18	0.18	0.18	0.13	0.13
13	0.09		0.08	0.10		0.09	0.12		0.11	0.16	0.16	0.17	0.18	0.17	0.17	0.19	0.17	0.15
14	0.09		0.10	0.03		0.02	0.12		0.11	0.19	0.19	0.19	0.12	0.18	0.18	0.20	0.18	0.12
15	0.11		0.11	0.06		0.09	0.14		0.12	0.22	0.22	0.21	0.11	0.16	0.18	0.20	0.18	0.18
16	0.12		0.09	0.05		0.08	0.12		0.11	0.22	0.19	0.20	0.10	0.10	0.11	0.10	0.07	0.05
17	0.14		0.09	0.08		0.07	0.16		0.14	0.18	0.15	0.18	0.06	0.10	0.10	0.18	0.18	0.18
18	0.10		0.10	0.04		0.03	0.11		0.10	0.13	0.12	0.14	0.08	0.17	0.17	0.17	0.15	0.14
19	0.09		0.08	0.03		0.02	0.03		0.03	0.10	0.11	0.10	0.19	0.18	0.18	0.15	0.15	0.14
20	0.09		0.09	0.10		0.09	0.00		0.01	0.13	0.13	0.14	0.19	0.18	0.18	0.22	0.19	0.17
21	0.09		0.09	0.08		0.10	0.06		0.12	0.15	0.13	0.15	0.17	0.18	0.18	0.21	0.18	0.16
22	0.09		0.08	0.10		0.11	0.12		0.13	0.14	0.13	0.15	0.15	0.16	0.16	0.21	0.18	0.16
23	0.11		0.09	0.08		0.10	0.07		0.03	0.16	0.14	0.15	0.20	0.20	0.19	0.20	0.17	0.17
24	0.09		0.11	0.10		0.10	0.10		0.08	0.12	0.11	0.14	0.20	0.19	0.19	0.20	0.16	0.14
25	0.12		0.10	0.01		0.01	0.13		0.13	0.17	0.17	0.19	0.19	0.17	0.17	0.18	0.16	0.16
26	0.13		0.11	0.10		0.10	0.04		0.02	0.21	0.20	0.19	0.22	0.22	0.20	0.19	0.18	0.19
27	0.11		0.10	0.11		0.11	0.13		0.13	0.20	0.20	0.20	0.22	0.22	0.21	0.20	0.18	0.15
28	0.09		0.09	0.11		0.11	0.15		0.14	0.19	0.18	0.19	0.21	0.20	0.20	0.20	0.17	0.14
29	0.05		0.04				0.19		0.15	0.24	0.23	0.20	0.20	0.20	0.20	0.18	0.19	0.17
30	0.03		0.06				0.18		0.19	0.23	0.24	0.23	0.19	0.20	0.19	0.24	0.24	0.23
31	0.09		0.08				0.21		0.20				0.20	0.19	0.20			
Total	**2.41**	**N/A**	**2.33**	**2.56**	**N/A**	**2.55**	**3.41**	**N/A**	**3.21**	**4.69**	**4.55**	**4.79**	**5.53**	**5.56**	**5.63**	**5.29**	**4.88**	**4.59**

Reference Evapotranspiration (in inches)

	July			August			September			October			November			December		
Day	Sisquoc	Santa Maria II	Nipomo	Sisquoc	Santa Maria II	Nipomo	Sisquoc	Santa Maria II	Nipomo	Sisquoc	Santa Maria II	Nipomo	Sisquoc	Santa Maria II	Nipomo	Sisquoc	Santa Maria II	Nipomo
1	0.24	0.21	0.21	0.22	0.21	0.20	0.16	0.12	0.11	0.14	0.14	0.13	0.11	0.09	0.10	0.12	0.13	0.13
2	0.24	0.20	0.19	0.21	0.20	0.20	0.16	0.14	0.09	0.14	0.13	0.12	0.12	0.11	0.11	0.09	0.08	0.09
3	0.24	0.21	0.20	0.17	0.15	0.15	0.17	0.14	0.11	0.12	0.13	0.12	0.10	0.11	0.10	0.08	0.07	0.08
4	0.23	0.21	0.20	0.19	0.19	0.19	0.16	0.13	0.14	0.04	0.09	0.10	0.05	0.08	0.08	0.08	0.07	0.07
5	0.22	0.21	0.21	0.16	0.14	0.09	0.15	0.14	0.15	0.08	0.09	0.10	0.08	0.08	0.08	0.07	0.07	0.07
6	0.22	0.20	0.21	0.18	0.15	0.13	0.18	0.16	0.14	0.13	0.12	0.10	0.07	0.09	0.08	0.08	0.07	0.08
7	0.23	0.20	0.20	0.17	0.15	0.13	0.20	0.18	0.17	0.14	0.14	0.13	0.09	0.10	0.09	0.08	0.04	0.07
8	0.22	0.18	0.17	0.18	0.16	0.07	0.17	0.14	0.12	0.14	0.13	0.13	0.10	0.09	0.09	0.07	0.06	0.07
9	0.19	0.14	0.13	0.19	0.17	0.12	0.14	0.13	0.11	0.13	0.13	0.11	0.11	0.09	0.09	0.07	0.07	0.07
10	0.18	0.16	0.16	0.17	0.15	0.11	0.05	0.05	0.04	0.12	0.11	0.11	0.04	0.04	0.05	0.07	0.06	0.07
11	0.19	0.16	0.11	0.15	0.11	0.08	0.11	0.10	0.10	0.15	0.16	0.14	0.07	0.05	0.03	0.04	0.04	0.05
12	0.16	0.13	0.14	0.18	0.14	0.10	0.16	0.15	0.14	0.17	0.23	0.19	0.06	0.06	0.06	0.01	0.02	0.02
13	0.19	0.17	0.12	0.19	0.18	0.15	0.16	0.15	0.10	0.20	0.17	0.16	0.08	0.07	0.08	0.06	0.06	0.06
14	0.19	0.19	0.19	0.20	0.18	0.15	0.13	0.12	0.07	0.15	0.13	0.13	0.03	0.03	0.04	0.06	0.06	0.07
15	0.17	0.15	0.15	0.22	0.20	0.19	0.10	0.11	0.09	0.09	0.09	0.06	0.08	0.08	0.08	0.04	0.04	0.04
16	0.18	0.14	0.14	0.19	0.16	0.11	0.11	0.12	0.11	0.11	0.11	0.11	0.08	0.08	0.09	0.06	0.07	0.07
17	0.20	0.18	0.18	0.18	0.16	0.17	0.13	0.14	0.13	0.12	0.10	0.09	0.08	0.08	0.08	0.05	0.07	0.07
18	0.21	0.20	0.20	0.17	0.16	0.16	0.17	0.16	0.13	0.09	0.06	0.10	0.05	0.06	0.06	0.06	0.06	0.06
19	0.21	0.18	0.17	0.14	0.15	0.14	0.16	0.15	0.12	0.09	0.11	0.11	0.07	0.07	0.07	0.03	0.05	0.05
20	0.21	0.19	0.15	0.14	0.14	0.13	0.14	0.12	0.08	0.10	0.10	0.06	0.01	0.03	0.02	0.02	0.06	0.07
21	0.17	0.15	0.09	0.18	0.15	0.15	0.13	0.11	0.12	0.09	0.08	0.09	0.07	0.06	0.07	0.06	0.06	0.06
22	0.18	0.15	0.14	0.16	0.13	0.13	0.14	0.13	0.13	0.13	0.12	0.11	0.07	0.06	0.07	0.07	0.06	0.07
23	0.17	0.14	0.12	0.19	0.18	0.15	0.09	0.11	0.13	0.15	0.12	0.10	0.06	0.06	0.06	0.07	0.07	0.07
24	0.19	0.15	0.15	0.18	0.18	0.14	0.09	0.08	0.11	0.07	0.05	0.04	0.05	0.05	0.06	0.09	0.07	0.08
25	0.19	0.15	0.16	0.18	0.16	0.16	0.10	0.13	0.13	0.02	0.03	0.04	0.09	0.09	0.09	0.09	0.07	0.07
26	0.21	0.18	0.17	0.12	0.12	0.16	0.15	0.15	0.13	0.10	0.10	0.10	0.09	0.08	0.09	0.07	0.06	0.07
27	0.19	0.19	0.16	0.17	0.15	0.14	0.16	0.15	0.13	0.14	0.12	0.12	0.10	0.08	0.08	0.06	0.06	0.07
28	0.20	0.18	0.15	0.17	0.14	0.16	0.15	0.12	0.09	0.14	0.12	0.12	0.07	0.06	0.07	0.08	0.08	0.10
29	0.18	0.15	0.09	0.17	0.15	0.17	0.10	0.10	0.08	0.13	0.13	0.15	0.06	0.06	0.07	0.09	0.09	0.08
30	0.16	0.13	0.10	0.16	0.13	0.13	0.13	0.12	0.11	0.12	0.11	0.12	0.10	0.10	0.09	0.06	0.06	0.06
31	0.15	0.14	0.13	0.16	0.14	0.12				0.10	0.09	0.08				0.09	0.12	0.11
Total	**6.11**	**5.32**	**4.89**	**5.44**	**4.88**	**4.38**	**4.15**	**3.85**	**3.41**	**3.64**	**3.54**	**3.37**	**2.24**	**2.19**	**2.23**	**2.07**	**2.05**	**2.20**

Total Evapotranspiration (in)	**Sisquoc**	**47.54**
SMVMA CIMIS Stations	**Santa Maria[1]**	**36.82**
	Nipomo	**43.58**

1) Partial year total, Santa Maria II station came on line in April 2011

Table 2.4-2 (cont.)
Reference Evapotranspiration and Precipitation Data, 2011
Santa Maria Valley Management Area CIMIS Stations

Precipitation (in inches)

	January			February			March			April			May			June		
Day	Sisquoc	Santa Maria II	Nipomo	Sisquoc	Santa Maria II	Nipomo	Sisquoc	Santa Maria II	Nipomo	Sisquoc	Santa Maria II	Nipomo	Sisquoc	Santa Maria II	Nipomo	Sisquoc	Santa Maria II	Nipomo
1	0.00		0.20	0.00		0.00	0.00		0.00	0.00	0.00	0.00	0.00	0.00	0.00	0.20	0.28	0.00
2	0.77		0.53	0.00		0.00	0.09		0.13	0.00	0.00	0.03	0.00	0.00	0.00	0.50	0.00	0.04
3	0.02		0.00	0.00		0.00	0.06		0.00	0.00	0.00	0.00	0.00	0.00	0.04	0.00	0.00	0.00
4	0.00		0.00	0.00		0.01	0.00		0.00	0.00	0.00	0.00	0.00	0.00	0.00	2.09	0.07	0.15
5	0.00		0.00	0.00		0.00	0.00		0.00	0.00	0.00	0.03	0.00	0.00	0.00	0.01	0.15	0.35
6	0.00		0.00	0.00		0.00	0.11		0.05	0.00	0.00	0.00	0.00	0.00	0.02	0.16	0.30	0.37
7	0.00		0.00	0.00		0.00	0.12		0.03	0.03	0.02	0.02	0.00	0.00	0.04	0.00	0.00	0.00
8	0.00		0.00	0.00		0.00	0.00		0.00	0.12	0.00	0.00	0.00	0.00	0.00	0.00	0.00	0.04
9	0.00		0.00	0.00		0.00	0.00		0.00	0.00	0.00	0.02	0.00	0.00	0.01	0.00	0.00	0.00
10	0.00		0.00	0.00		0.01	0.00		0.04	0.00	0.00	0.00	0.00	0.00	0.00	0.00	0.00	0.04
11	0.00		0.00	0.00		0.00	0.00		0.01	0.00	0.00	0.08	0.00	0.00	0.05	0.00	0.00	0.00
12	0.00		0.00	0.00		0.00	0.00		0.00	0.00	0.00	0.00	0.00	0.00	0.00	0.00	0.00	0.00
13	0.00		0.00	0.00		0.00	0.00		0.00	0.00	0.00	0.04	0.00	0.00	0.04	0.00	0.00	0.00
14	0.00		0.00	0.00		0.02	0.00		0.04	0.00	0.00	0.00	0.02	0.00	0.00	0.00	0.00	0.03
15	0.00		0.00	0.02		0.00	0.01		0.00	0.00	0.00	0.05	0.15	0.06	0.17	0.78	0.00	0.00
16	0.00		0.00	0.30		0.26	0.00		0.00	0.00	0.00	0.00	0.04	0.06	0.12	0.06	0.00	0.02
17	0.00		0.00	0.00		0.00	0.00		0.04	0.00	0.00	0.00	0.09	0.10	0.16	0.03	0.00	0.00
18	0.00		0.00	1.62		1.35	0.50		0.16	0.01	0.00	0.00	0.09	0.05	0.05	0.03	0.00	0.03
19	0.00		0.00	0.37		0.56	0.56		0.82	0.00	0.00	0.00	0.00	0.00	0.04	0.19	0.00	0.00
20	0.00		0.00	0.02		0.00	3.80		2.36	0.01	0.00	0.00	0.00	0.00	0.00	0.12	0.00	0.04
21	0.00		0.00	0.00		0.00	0.07		0.06	0.04	0.07	0.15	0.00	0.00	0.03	1.83	0.00	0.00
22	0.00		0.02	0.00		0.05	0.00		0.00	0.00	0.00	0.00	0.00	0.00	0.00	0.00	0.00	0.03
23	0.00		0.00	0.00		0.02	0.27		0.40	0.00	0.00	0.05	0.00	0.00	0.03	0.00	0.00	0.02
24	0.00		0.02	0.00		0.05	0.26		0.35	0.01	0.02	0.02	0.00	0.00	0.00	0.00	0.00	0.01
25	0.00		0.00	0.56		0.56	0.06		0.06	0.00	0.00	0.04	0.00	0.00	0.04	0.00	0.00	0.00
26	0.00		0.00	0.01		0.00	0.08		0.35	0.00	0.00	0.00	0.00	0.00	0.00	0.00	0.00	0.05
27	0.00		0.02	0.00		0.00	0.00		0.00	0.00	0.00	0.05	0.00	0.00	0.04	0.00	0.00	0.00
28	0.00		0.00	0.00		0.00	0.00		0.00	0.00	0.00	0.00	0.00	0.04	0.06	0.00	0.00	0.02
29	0.03		0.03				0.00		0.00	0.00	0.00	0.00	0.02	0.00	0.04	0.01	0.01	0.04
30	0.25		0.10				0.00		0.02	0.00	0.00	0.00	2.07	0.00	0.00	0.00	0.00	0.04
31	0.00		0.00				0.00		0.00				0.54	0.19	0.05			
Total	**1.07**	**N/A**	**0.92**	**2.90**	**N/A**	**2.89**	**5.99**	**N/A**	**4.92**	**0.22**	**0.11**	**0.58**	**3.02**	**0.50**	**1.03**	**6.01**	**0.81**	**1.32**

Precipitation (in inches)

	July			August			September			October			November			December		
Day	Sisquoc	Santa Maria II	Nipomo	Sisquoc	Santa Maria II	Nipomo	Sisquoc	Santa Maria II	Nipomo	Sisquoc	Santa Maria II	Nipomo	Sisquoc	Santa Maria II	Nipomo	Sisquoc	Santa Maria II	Nipomo
1	0.00	0.00	0.02	0.00	0.00	0.04	1.93	0.00	0.00	0.00	0.00	0.05	0.00	0.01	0.00	0.00	0.00	0.01
2	0.00	0.00	0.04	0.00	0.00	0.00	2.00	0.00	0.05	0.00	0.00	0.00	0.00	0.00	0.00	0.00	0.00	0.00
3	0.00	0.00	0.00	0.00	0.00	0.04	1.10	0.00	0.00	0.00	0.04	0.09	0.08	0.03	0.02	0.00	0.00	0.00
4	0.00	0.00	0.03	0.92	0.00	0.00	0.00	0.00	0.04	0.01	0.05	0.05	0.06	0.04	0.17	0.00	0.00	0.00
5	0.00	0.00	0.01	0.84	0.00	0.02	0.25	0.00	0.00	0.33	0.55	0.63	0.11	0.00	0.00	0.06	0.00	0.00
6	0.00	0.00	0.04	0.17	0.00	0.00	0.15	0.12	0.06	0.06	0.01	0.02	0.09	0.18	0.08	0.00	0.00	0.00
7	0.00	0.00	0.00	0.06	0.00	0.05	0.12	0.00	0.00	0.02	0.00	0.03	0.00	0.00	0.00	0.00	0.00	0.01
8	0.00	0.00	0.04	0.00	0.00	0.00	0.07	0.00	0.05	0.00	0.00	0.00	0.00	0.00	0.00	0.00	0.00	0.00
9	0.00	0.00	0.01	0.00	0.00	0.00	0.07	0.00	0.00	0.00	0.00	0.03	0.00	0.00	0.00	0.00	0.00	0.00
10	0.00	0.00	0.05	0.00	0.00	0.03	0.11	0.11	0.10	0.00	0.00	0.01	0.00	0.00	0.00	0.00	0.00	0.00
11	0.00	0.00	0.00	0.00	0.00	0.05	0.13	0.00	0.00	0.00	0.00	0.02	0.04	0.43	0.46	0.00	0.00	0.00
12	0.00	0.00	0.04	0.00	0.00	0.00	0.13	0.40	0.04	0.00	0.00	0.00	0.05	0.03	0.01	0.06	0.18	0.20
13	0.00	0.00	0.00	0.00	0.00	0.04	0.04	0.00	0.00	0.00	0.00	0.00	0.00	0.00	0.00	0.00	0.00	0.00
14	0.00	0.00	0.04	0.00	0.00	0.00	0.02	0.00	0.06	0.00	0.00	0.02	0.00	0.00	0.00	0.00	0.00	0.01
15	0.00	0.00	0.00	0.00	0.00	0.04	0.01	0.00	0.00	0.00	0.00	0.01	0.00	0.00	0.00	0.00	0.02	0.02
16	0.00	0.00	0.04	0.00	0.00	0.01	0.01	0.00	0.00	0.00	0.00	0.00	0.00	0.00	0.00	0.00	0.00	0.00
17	0.00	0.00	0.00	0.00	0.00	0.02	0.00	0.00	0.04	0.00	0.00	0.04	0.00	0.00	0.00	0.00	0.00	0.00
18	0.24	0.00	0.04	0.00	0.00	0.00	0.01	0.00	0.00	0.00	0.00	0.01	0.00	0.01	0.00	0.00	0.00	0.00
19	0.09	0.00	0.00	0.00	0.00	0.04	0.02	0.00	0.05	0.00	0.00	0.04	0.00	0.00	0.00	0.00	0.00	0.00
20	0.07	0.00	0.02	0.00	0.00	0.00	0.02	0.01	0.01	0.00	0.00	0.01	0.00	0.61	0.80	0.00	0.00	0.00
21	0.03	0.00	0.00	0.00	0.00	0.04	0.02	0.00	0.04	0.00	0.00	0.03	0.00	0.00	0.00	0.00	0.00	0.00
22	0.02	0.00	0.03	0.00	0.00	0.00	0.05	0.00	0.01	0.00	0.00	0.00	0.01	0.00	0.00	0.00	0.01	0.00
23	0.01	0.00	0.00	0.00	0.00	0.05	0.02	0.00	0.03	0.00	0.00	0.02	0.00	0.00	0.00	0.00	0.00	0.00
24	0.00	0.00	0.05	0.00	0.00	0.00	0.02	0.00	0.01	0.01	0.00	0.00	0.01	0.00	0.00	0.00	0.00	0.00
25	0.00	0.00	0.00	0.00	0.00	0.05	0.01	0.00	0.03	0.00	0.00	0.00	0.00	0.00	0.00	0.00	0.00	0.00
26	0.00	0.00	0.01	0.00	0.00	0.01	0.01	0.00	0.00	0.00	0.00	0.00	0.00	0.00	0.00	0.00	0.00	0.00
27	0.00	0.00	0.00	0.00	0.00	0.05	0.00	0.00	0.04	0.00	0.00	0.00	0.00	0.00	0.00	0.00	0.01	0.01
28	0.00	0.00	0.04	0.00	0.00	0.00	0.00	0.00	0.00	0.00	0.00	0.02	0.00	0.00	0.02	0.00	0.00	0.00
29	0.00	0.00	0.00	0.87	0.51	0.02	0.00	0.00	0.03	0.00	0.00	0.00	0.00	0.00	0.00	0.00	0.00	0.00
30	0.00	0.00	0.01	0.51	0.00	0.00	0.00	0.00	0.00	0.00	0.00	0.03	0.00	0.01	0.01	0.00	0.00	0.00
31	0.00	0.00	0.00	0.00	0.00	0.03				0.00	0.01	0.01				0.00	0.00	0.00
Total	**0.46**	**0.00**	**0.56**	**3.37**	**0.51**	**0.63**	**6.32**	**0.64**	**0.69**	**0.43**	**0.66**	**1.17**	**0.45**	**1.35**	**1.57**	**0.12**	**0.22**	**0.26**

Total Precipitation (in)	**Sisquoc[1]**	**30.36**
SMVMA CIMIS Stations	**Santa Maria[2]**	**4.80**
	Nipomo	**16.54**

1) Sisquoc station data from June through December are flagged by Calif. DWR

2) Partial year total, Santa Maria II station came on line in April 2011

3. Water Requirements and Water Supplies

Current water requirements and water supplies in the SMVMA, including discussion of agricultural land use and crop water requirements, which were the basis for estimation of agricultural water requirements and groundwater supply in 2011, are described in the following sections of this Chapter. Municipal water requirements and the components of water supply to meet those requirements, including groundwater and imported water from the State Water Project (SWP), are also described in the following sections.

3.1 Agricultural Water Requirements and Supplies

All agricultural water requirements in the SMVMA are supplied by local groundwater pumping, essentially all of which is neither directly metered nor otherwise indirectly measured. Consequently, agricultural water requirements, which represent by far the largest part of overall water requirements in the SMVMA, need to be indirectly estimated. Historically, and for this annual report, agricultural water requirements are estimated by quantifying land use (crop types and acreages), computing applied water requirements for each crop type, and summing total water requirements for the aggregate of various crops throughout the SMVMA. Reflected in this annual report are previously reported estimates of historical agricultural land use and water requirements through 1995 (LSCE, 2000) and from 1998 through 2010 (LSCE, 2011), as well as the current estimate of land use and water requirements for 2011 made as part of the overall preparation of this 2011 annual report.

3.1.1 Land Use

An assessment was made of crop acreages in 2011 from the review of Pesticide Use Report (PUR) databases, including mapped agricultural parcels permitted for pesticide application, maintained by the Santa Barbara and San Luis Obispo County Agricultural Commissioner's Offices. The mapped parcels were identified by the respective Counties under the following crop types: 1) Rotational Vegetable, 2) Strawberry, 3) Wine Grape, 4) Pasture, 5) Grain, 6) Nursery, and 7) Orchard (Citrus and Deciduous). Review of the PUR records indicated that "Rotational Vegetable" primarily consisted of lettuce, celery, broccoli, cauliflower, and spinach crops. Verification of agricultural cropland distribution in the SMVMA was conducted through review of monthly satellite images and high-resolution aerial photographs, an inventory of which is provided in Appendix B of this report. The distribution of irrigated acreage for 2011, by crop type identified by the Counties as well as by crop category utilized by the California DWR in its periodic land use studies, is listed in Table 3.1-1a. The crop parcel locations in 2011 are shown in a map of agricultural land use throughout the SMVMA (Figure 3.1-1a) and the distribution of historical irrigated acreage, including DWR land use study years and LSCE assessment years through 2011, is listed in Table 3.1-1b.

In 2011, approximately 50,880 acres in the Santa Maria Valley were irrigated cropland, with the predominant majority (87 percent) in truck crops, specifically Rotational Vegetables (34,240 acres) and Strawberries (9,940 acres). Vineyard comprised the next largest category (4,560 acres), with Grain, Pasture, Nursery, and Orchard in descending order of acreage (1,030, 320,

230, and 30 acres, respectively). Fallow cropland was estimated to be approximately 530 acres. Cropland occupies large portions of the Santa Maria Valley floor, Orcutt Upland, Oso Flaco area, and Sisquoc plain and terraces.

Total irrigated acreage of about 50,880 acres in 2011 is near the upper end of the range over the last 15 years, and within the reported historical range between roughly 34,000 acres in 1945 and 53,000 acres in 1995, as shown in Table 3.1-1b (USGS, Worts, G.F., 1951; California DWR, 1959, 1968, 1977, 1985, and 1995; LSCE, 2000 and 2009). The 2011 irrigated acreage is consistent with those of the last decade, during which total acreages gradually increased from 48,200 acres in 1998. The 2011 cropland locations continue the historical trend of agricultural expansion onto portions of the Orcutt Upland and Sisquoc Valley as urban land use expands into former cropland near the central portions of the Santa Maria Valley and Orcutt Upland. Further, the 2011 crop type distribution continues the historical trend of increased truck crop acreage and decline in pasture (including alfalfa), field, and orchard acreages, as illustrated by the bar chart of historical crop type distribution from DWR land use study years and for 2011 (Figure 3.1-1b). In order to provide consistency with the historical land use data, the 2011 crop acreages reported here are "land" acreages; i.e., the land area used for growing crops regardless of whether it is used for single or multiple cropping throughout any given year. Multiple cropping of land, and associated annual water requirements, is accommodated in the calculation of applied crop water requirements below.

3.1.2 Applied Crop Water Requirements

Applied crop water requirements were developed for the crop categories described above, and the approach used in their development depended on information available for each individual category. In the case of Rotational Vegetables (primarily lettuce, celery, broccoli, cauliflower, and spinach), Strawberries, and Pasture, values for their evapotranspiration of applied water (ETaw) were developed using a CIMIS-based approach where reference evapotranspiration data (ETo) were coupled with crop coefficients (Kc) to first estimate the evapotranspirative water requirements of the crops (ETc). Those requirements were then factored to consider any effective precipitation in 2011 that would have reduced the need for applied water to meet the respective evapotranspirative water requirements, which in turn provided the ETaw values for those three categories.

For the remaining crop categories, for which information was insufficient to utilize a CIMIS-based approach, reported values of ETaw were used (California DWR, 1975). Specifically, these were values measured and developed for different rainfall zones in the central California coastal valleys, and a review of the reported values indicated that they accommodated multiple cropping. The values in turn had previously been used to develop a relationship between ETaw values and the annual rainfall amounts within the Santa Maria Valley groundwater basin by crop type (LSCE, 2000). Since the rainfall total for 2011 in the SMVMA was almost 14 inches, the previously developed ETaw values corresponding to that amount of precipitation were used for this assessment.

For the three crop categories utilizing the CIMIS-based approach, the average of daily ETo data for 2011 from the nearest CIMIS stations (Nipomo, Sisquoc, and Santa Maria II, see Table 2.4-2)

were used in conjunction with Kc values from the following sources to develop ETc values. The Rotational Vegetable value was based on reported values for lettuce derived from an agricultural leaflet for estimating ETc for vegetable crops (Univ. of California Cooperative Extension, 1994); the Strawberry values were derived from a paper reporting the results of a study on drip irrigation of strawberries in the Santa Maria Valley (Hanson, B., and Bendixen, W., 2004); and the Pasture values were directly based on ETo values measured on the reference surface (grass) at the Nipomo, Sisquoc, and Santa Maria II stations. The resulting ETc values for the three crop categories are shown in Table 3.1-1c.

Effective precipitation (P_E) during 2011 was then subtracted from the ETc values to estimate crop ETaw values. The P_E amounts that contributed to meeting the ETc of the crops, and thus reduced applied water requirements, were based on review of the precipitation data for 2011, during which rain primarily occurred in February and March. During those months, the ETc for all crops was largely or entirely met by precipitation. The calculated ETaw values for Rotational Vegetables, Strawberries, and Pasture, as well as the developed values for the remaining crop categories (and the value for Nursery from NMMA TG), are shown in Table 3.1-1c.

Values of ETaw were then used to estimate applied crop water requirements (AW) by considering estimated irrigation system distribution uniformity (DU) values for each crop. For Strawberries grown in the Santa Maria Valley, DU values have been reported to range from 80 and 94 percent (Hanson, B., and Bendixen, W., 2004), and an intermediate DU value of 85 percent was selected for this assessment. For the remaining crops, DU values have not been specifically reported for the Santa Maria Valley; for this assessment, values of 80 percent (Rotational Vegetables, Truck, Grain, and Pasture), 85 percent (Citrus), and 95 percent (Vineyard and Nursery) were utilized. The resulting AW values for each of the crop categories are shown in Table 3.1-1c; they range from a highest applied water rate of 3.7 af/ac for Pasture, to intermediate rates of 2.2 af/ac for Rotational Vegetables and 1.3 af/ac for strawberries, to a low of 1.1 af/ac for Vineyard, and no applied water for Grain. The AW values calculated for crops grown in the SMVMA in 2011 are similar to those reported for crops grown in the NMMA (NMMA TG, 2009 through 2011). Between the two adjacent management areas, crops in common are Rotational Vegetables, Strawberries, Pasture, Citrus, Nursery, and Deciduous.

3.1.3 Total Agricultural Water Requirements

The AW values for each SMVMA crop category were coupled with their respective crop acreages from 2011 to produce estimates of the individual crop and total agricultural water requirements for 2011, as shown in Table 3.1-1c. The resultant estimated total water requirement was about 96,400 af, with Rotational Vegetables comprising by far the greatest component, about 77,200 af, primarily because about 67 percent of the total acreage was dedicated to those crops. Strawberries comprised the next largest crop acreage and had an associated water requirement over 12,700 af. Vineyard had a water requirement of about 4,800 af, and all remaining crop types had water requirements below 2,000 af.

In the context of historical estimates of total agricultural water requirements, the estimated 2011 agricultural water use is in the range of applied water requirements over the last four decades, as illustrated in a graph of historical irrigated acreage and agricultural groundwater pumping (the

sole source of irrigation water in the Valley and, thus, equal to total agricultural water requirements) (Figure 3.1-1c). For reference, agricultural water requirements were previously estimated to be around 80,000 afy during the 1940's and 1950's, gradually increasing to over 100,000 afy by the 1970's; since then, agricultural water requirements have fluctuated from year to year, as a function of weather variability, but water requirements have generally remained within a broad but fairly constant range (LSCE, 2000, 2011). Since the 1970's, maximum and minimum agricultural water requirements, respectively, were about 132,000 af in 1997 and about 77,000 af in 1998, with estimated agricultural water requirements in 2011 well within that range.

3.1.4 Agricultural Groundwater Pumping

As noted above, the sole source of water for agricultural irrigation in the SMVMA is groundwater, so groundwater pumping for agricultural irrigation in 2011 is estimated to be the same as the total estimated agricultural water requirement of 96,400 af. This amount is also, of course, within the historical range of estimated groundwater pumping for agricultural irrigation in the Valley over the last four decades. Proportions of groundwater pumping from the shallow and deep aquifer zones of the SMVMA are not known because a comprehensive understanding of individual irrigation well depths and completion intervals is lacking.

3.2 Municipal Water Requirements and Supplies

Prior to the late 1990’s, all municipal water requirements in the SMVMA were met by local groundwater pumping. Since the beginning of State Water Project (SWP) availability in 1997, deliveries of SWP water have replaced some of the local groundwater pumping for municipal supply. All municipal pumping and imported (SWP) water deliveries in the SMVMA are metered; consequently, the following summaries of municipal water requirement and supplies derive from those measured data.

3.2.1 Municipal Groundwater Pumping

Municipal purveyors in the SMVMA include the Cities of Santa Maria and Guadalupe and the Golden State Water Company (GSWC, formerly Southern California Water Company). The latter provides water to suburban areas in the southern portion of the SMVMA, specifically the towns of Orcutt and Sisquoc and the Lake Marie and Tanglewood developments. With the exception of small pumping in Guadalupe and Sisquoc, municipal pumping is from numerous water supply wells in individual wellfields located between the Santa Maria Airport and the town of Orcutt (see Figure 1.3-1a). The municipal water supply wells are completed in the shallow and/or deep aquifer zones with, in general, newer wells having been constructed to produce from deeper portions of the aquifer system with better water quality. Monthly and total annual groundwater pumping amounts for 2011 are tabulated by individual well, by purveyor, and for each water system in Table 3.2-1a.

In 2011, 9,260 af of groundwater were pumped for municipal water supply in the SMVMA. GSWC pumping was the largest, nearly 7,375 af, of which the great majority (7,090 af) was for the GSWC Orcutt system and less than 300 af was for all three of the other GSWC systems

combined. The City of Santa Maria pumped 1,170 af and the City of Guadalupe pumped about 715 af.

Compared to historical municipal pumping, pumping for municipal supply in 2011 was substantially less than just over a decade ago, immediately prior to the initial deliveries of supplemental imported SWP water in 1997, as shown in a graph of historical municipal groundwater pumpage for the SMVMA (Figure 3.2-1a). Most notably, the City of Santa Maria has substantially reduced pumping since the importation of SWP water began, from 12,800 af in 1996 to 8,000 af in 1997, to about 6,600 af in 2008 and 2009, and to about 1,200 af in 2011. Due to high availability of SWP water through the intervening period (1998 through 2007), however, groundwater pumping by Santa Maria was significantly lower, an average of about 1,000 afy. Equally notable is that total municipal pumping has been reduced to about two-thirds the 1996 amount, from over 23,500 af in 1996 to under 10,000 af in 2011. Over the entire period since SWP was made available, total municipal pumping has ranged between 8,900 afy and 16,350 afy, and has averaged about 11,700 afy, which would represent an approximate 50 percent decrease in municipal pumping from immediately prior to SWP water availability.

3.2.2 Imported Water

The three municipal purveyors in the SMVMA have entitlements to imported water from the State Water Project (SWP) through the Central Coast Water Authority (CCWA). As tabulated by CCWA, their respective entitlements are 16,200 af for the City of Santa Maria, 550 af for the City of Guadalupe, and 500 af for Southern California Water Company (now Golden State Water Company). In addition to those entitlements, CCWA retained a “drought buffer” to partially firm up the overall entitlement of SWP participants in Santa Barbara County. Nominally equal to ten percent of the base entitlement of SWP project participants in Santa Barbara County, the drought buffer is intended for potential use by SWP project participants, including all three municipal purveyors in the SMVMA, during years when the availability of SWP water exceeds project participants’ water demand. It is intended that the drought buffer be used via some form of groundwater banking to firm up the overall reliability of supplemental SWP deliveries. As a result of the drought buffer, the municipal purveyors in the SMVMA express their “entitlements” as quantities that include a combination of their base entitlements plus the ten percent drought buffer; one such location is in Exhibit F to the Stipulation where entitlements are listed as follows: Santa Maria, 17,800 af; SCWC (GSWC), 550 af; and Guadalupe, 610 af. Such as the Stipulation also specifies certain minimum importation of SWP water, as a function of its availability in any given year and also as a function of individual purveyor entitlement, the following assessment of imported water use in 2011 is related to those total entitlements.

In 2011, total deliveries of SWP water to the SMVMA were 12,135 af. The majority of those deliveries, 11,785 af, were to the City of Santa Maria; a small portion of the Santa Maria deliveries, 290 af, were transferred to GSWC, which also took delivery of 180 af of its own entitlement. The City of Guadalupe took 170 af of SWP water in the latter half of 2011 only, due to pipeline operational problems experienced in 2010 and the first half of 2011. Total deliveries of SWP water to the SMVMA in 2011 are summarized in Table 3.2-1b.

Municipal deliveries commenced in 1997 with approximately 4,500 af going to the City of Santa Maria. The following year, the City’s delivery more than doubled to nearly 10,700 af and

GSWC took about 80 af (the City of Guadalupe delivery records prior to 2004 are unavailable). Since then and through 2007, total annual SWP water deliveries ranged between about 10,400 and 13,800 afy. Due to decreased SWP water availability in 2008 and 2009, SWP water deliveries in those years were about 8,000 afy, but with the improved SWP water availability in 2010 and 2011, water deliveries increased to about 10,450 and 12,135 af, respectively, as shown in a graph of the historical deliveries of SWP water to the SMVMA (Figure 3.2-1b).

The Stipulation designates minimum amounts of SWP water to be imported and used in the SMVMA in any year as a function of individual entitlement and SWP availability. Santa Maria is to import and use not less than 10,000 afy of available SWP water, or the full amount of available SWP water when it is less than 10,000 af. Guadalupe is to import and use a minimum of 75 percent of its available SWP water; and GSWC is to import and use all its available SWP water. In 2011, overall SWP water availability was 80 percent of entitlements. For municipal purveyors in the SMVMA, that availability converts to the following individual availability of SWP water: Santa Maria, 14,240 af; GSWC, 440 af; and Guadalupe, 490 af (75 percent of which, or 365 af, as a minimum was to be imported). Actual imports of SWP water by all three municipal purveyors (including transfers from Santa Maria to GSWC), were as follows: Santa Maria, 11,495 af; GSWC, 470 af; and Guadalupe, 170 af (see Table 3.2-1b). Comparison of these figures indicates the City of Santa Maria imported more than their minimum amount and, thus, satisfied the specification in the Stipulation for importation and use of SWP water in the SMVMA for 2011. The GSWC fully complied with the Stipulation specification, and the City of Guadalupe, in accordance with the Stipulation, imported in the second half of the year the specified amount (operational problems precluded taking delivery of SWP water until their resolution in July 2011).

3.2.3 Total Municipal Water Requirements

Total municipal water requirements in 2011 were about 21,400 af. While that total reflects a decrease since the highest historical municipal water use, 25,500 af in 2007, it continues a long-term general trend of increasing municipal water requirements that have essentially doubled since the mid-1970's. In general, municipal water requirements have followed a roughly linear increase of about 5,000 af over the last 20 to 25 years, although more recently with a progressive decline in municipal water use each year since 2007, possibly reflecting the broad decline in economic conditions observed over the last few years. The overall history of municipal water use in the SMVMA is detailed in Table 3.2-1c and illustrated in a graph of annual municipal requirements (Figure 3.2-1c).

3.3 Total Water Requirements and Supplies

Total water requirement for 2011 in the SMVMA, the combination of agricultural and municipal water requirements, was approximately 117,800 af. That total demand was predominately met by about 105,650 af of groundwater pumping. The balance, 12,150 af, was met by delivery of imported water from the State Water Project as seen in Table 3.3-1a. Groundwater met 100 percent of the agricultural water requirement (96,400 af), 43 percent of the municipal water requirements (21,400 af), and 90 percent of the total water requirements in the SMVMA (117,800 af).

Historical total water requirements in the SMVMA have increased from about 80,000 af in 1950 to about 150,000 af by 1990, and have fluctuated in a broad but relatively constant range between about 100,000 and 150,000 afy, as shown in a graph of historical total water requirements (Figure 3.3-1). Total water requirements in 2011 remained within that range.

Historical water supplies in the SMVMA were solely derived from groundwater pumping until 1997, when the City of Santa Maria commenced importation of SWP water. While groundwater has always met 100 percent of agricultural water requirements (and through 1996 also met 100 percent of municipal water requirements), groundwater pumping has since met from 35 to 80 percent of the municipal water requirements and from 87 to 97 percent of the total water requirements in the SMVMA, as shown in Table 3.3-1b.

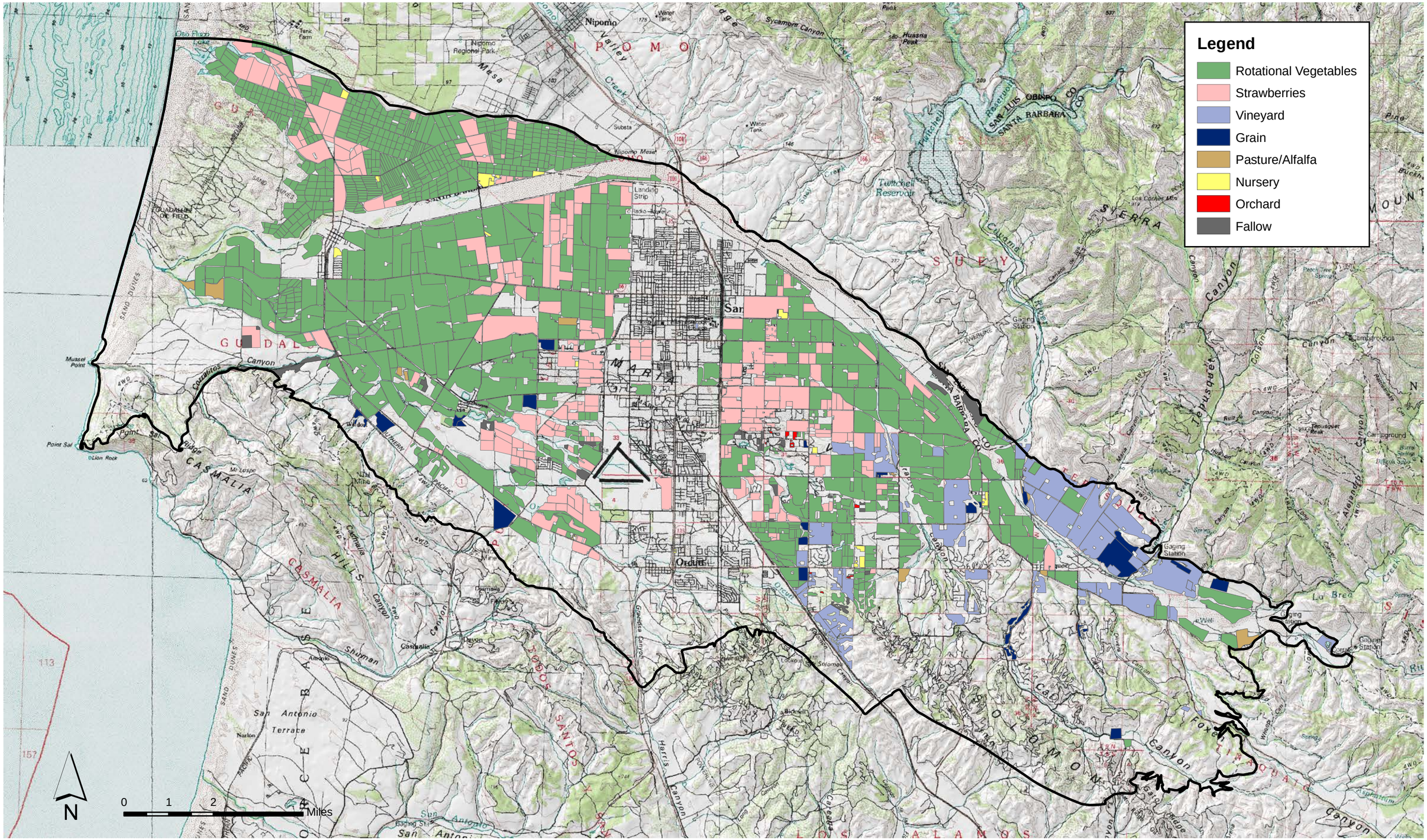

LUHDORFF & SCALMANINI
CONSULTING ENGINEERS

Figure 3.1-1a
Agricultural Land Use, 2011
Santa Maria Valley Management Area

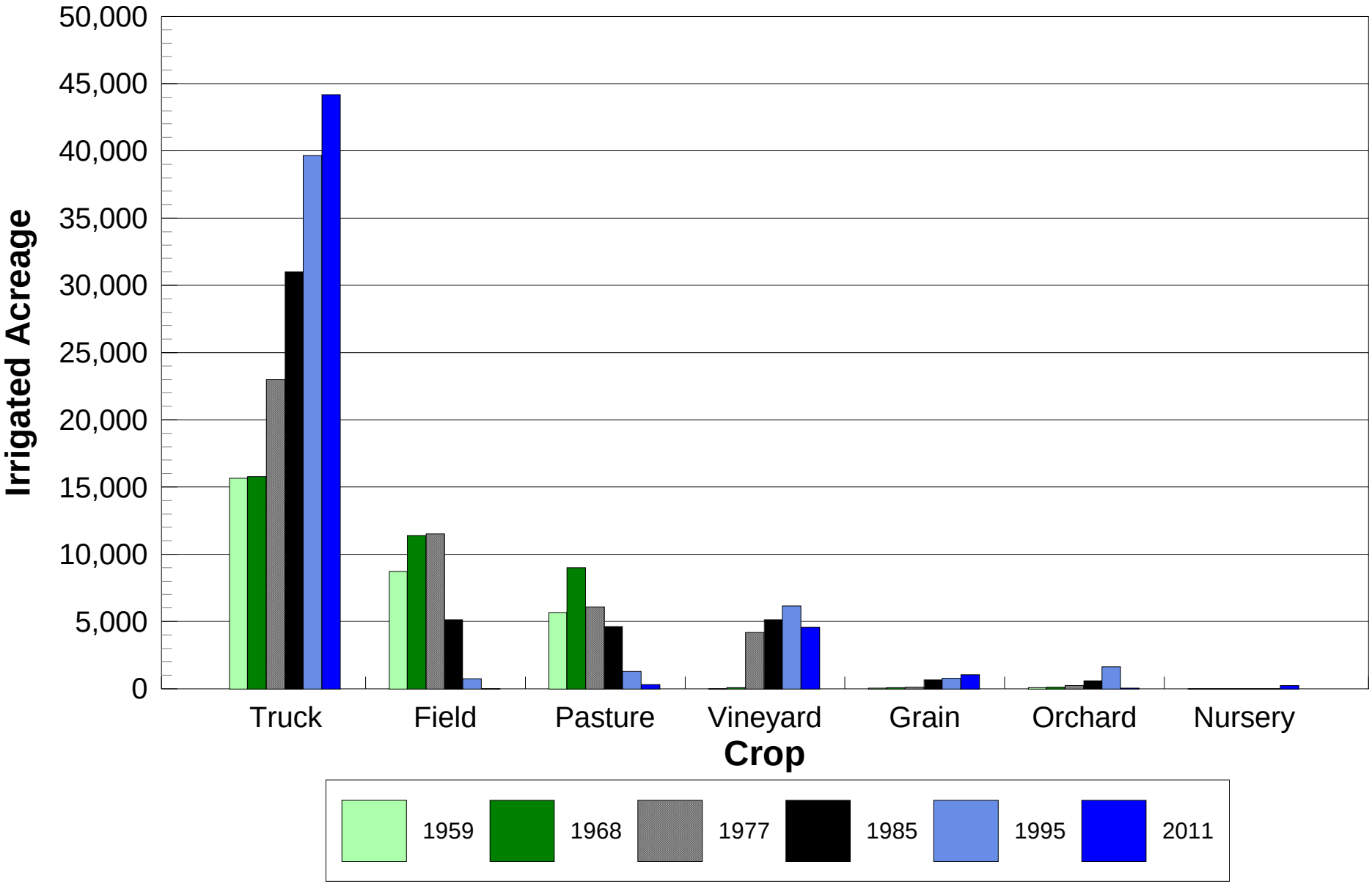

LUHDORFF & SCALMANINI
CONSULTING ENGINEERS

Figure 3.1-1b
Historical Distribution of Irrigated Acreage by Crop Category
Santa Maria Valley Management Area

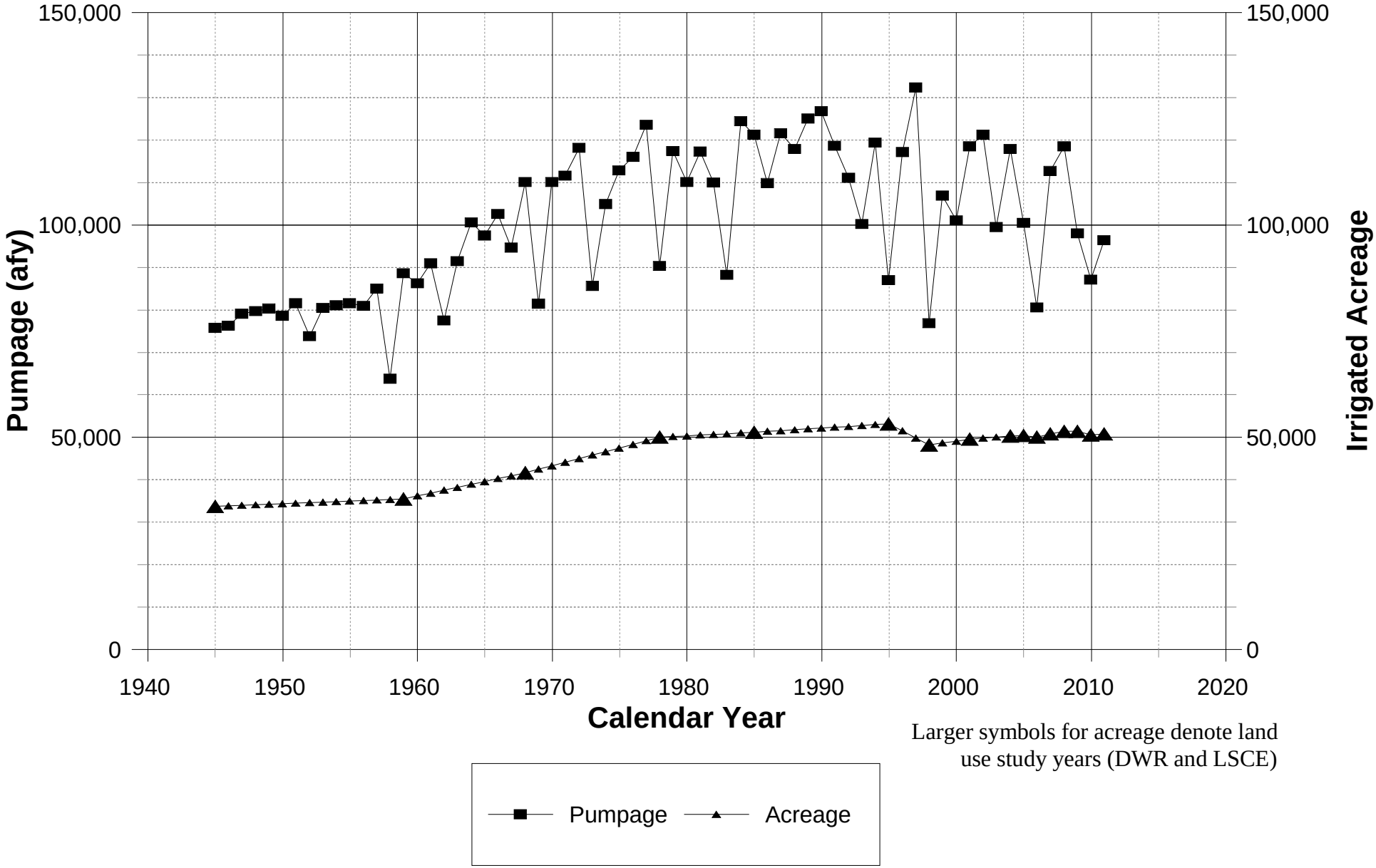

LUHDORFF & SCALMANINI CONSULTING ENGINEERS

Figure 3.1-1c
Historical Agricultural Acreage and Groundwater Pumpage
Santa Maria Valley Management Area

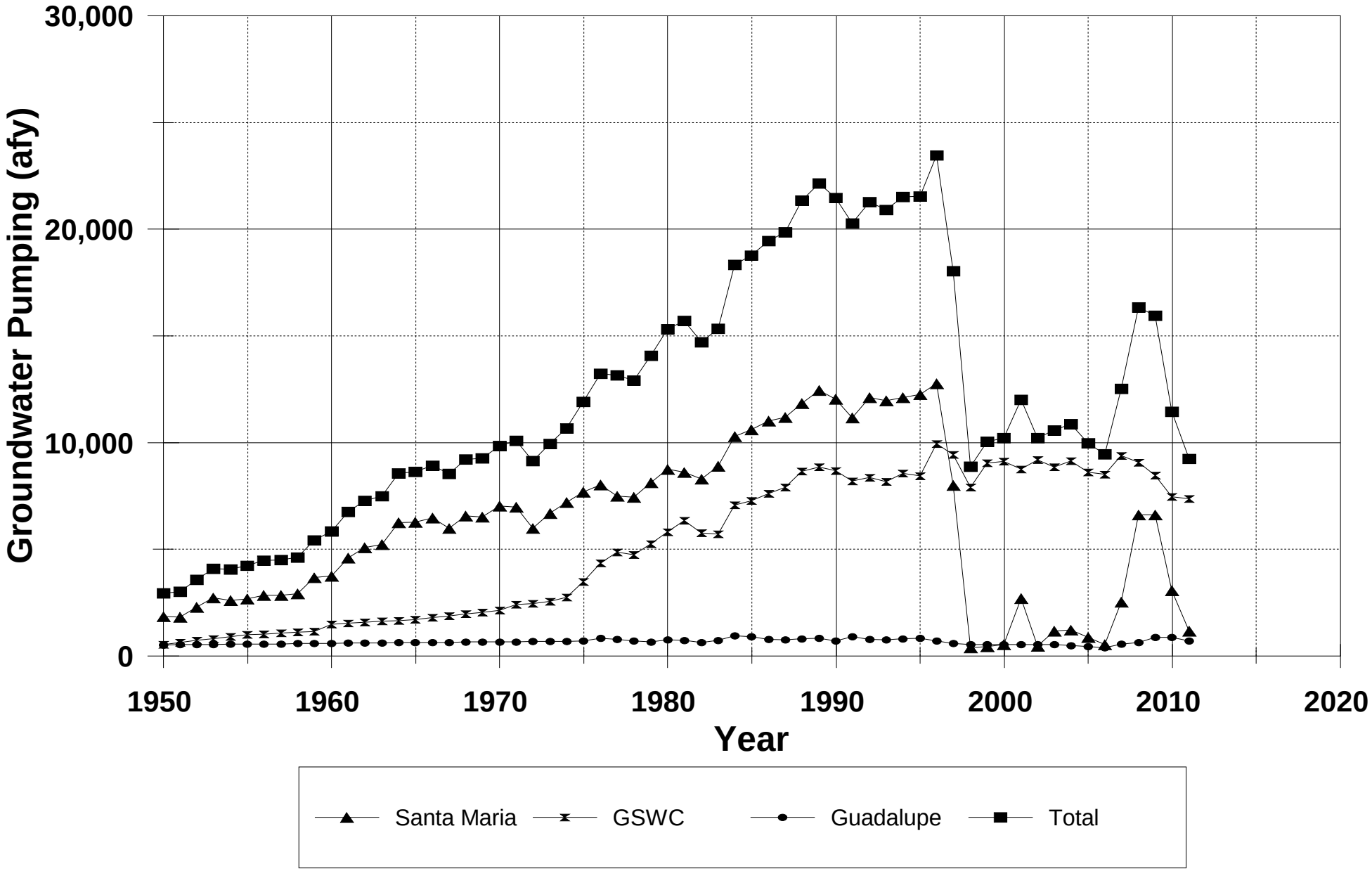

LUHDORFF & SCALMANINI
CONSULTING ENGINEERS

Figure 3.2-1a
Historical Municipal Groundwater Pumpage
Santa Maria Valley Management Area

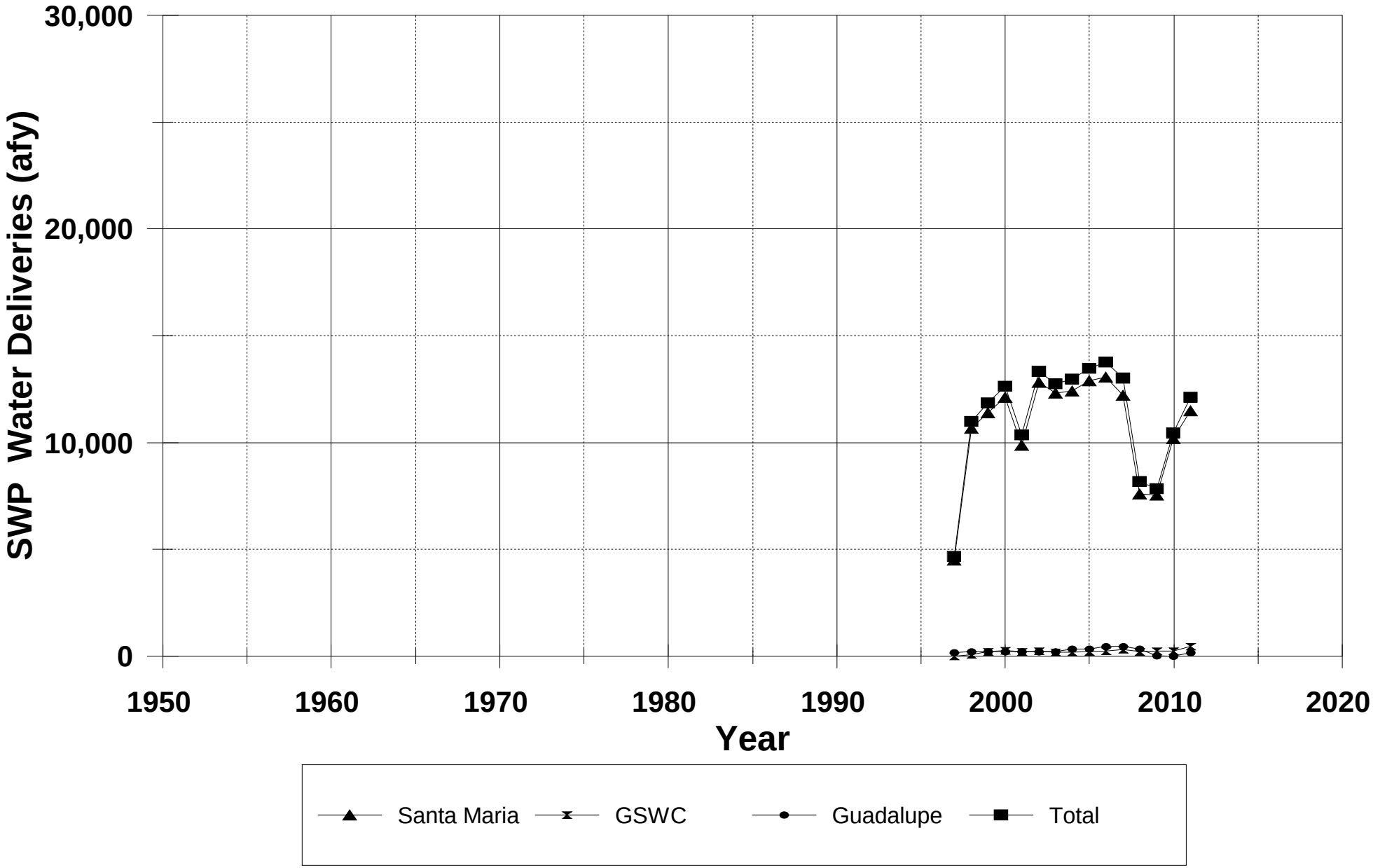

LUHDORFF & SCALMANINI
CONSULTING ENGINEERS

Figure 3.2-1b
Historical State Water Project Water Deliveries
Santa Maria Valley Management Area

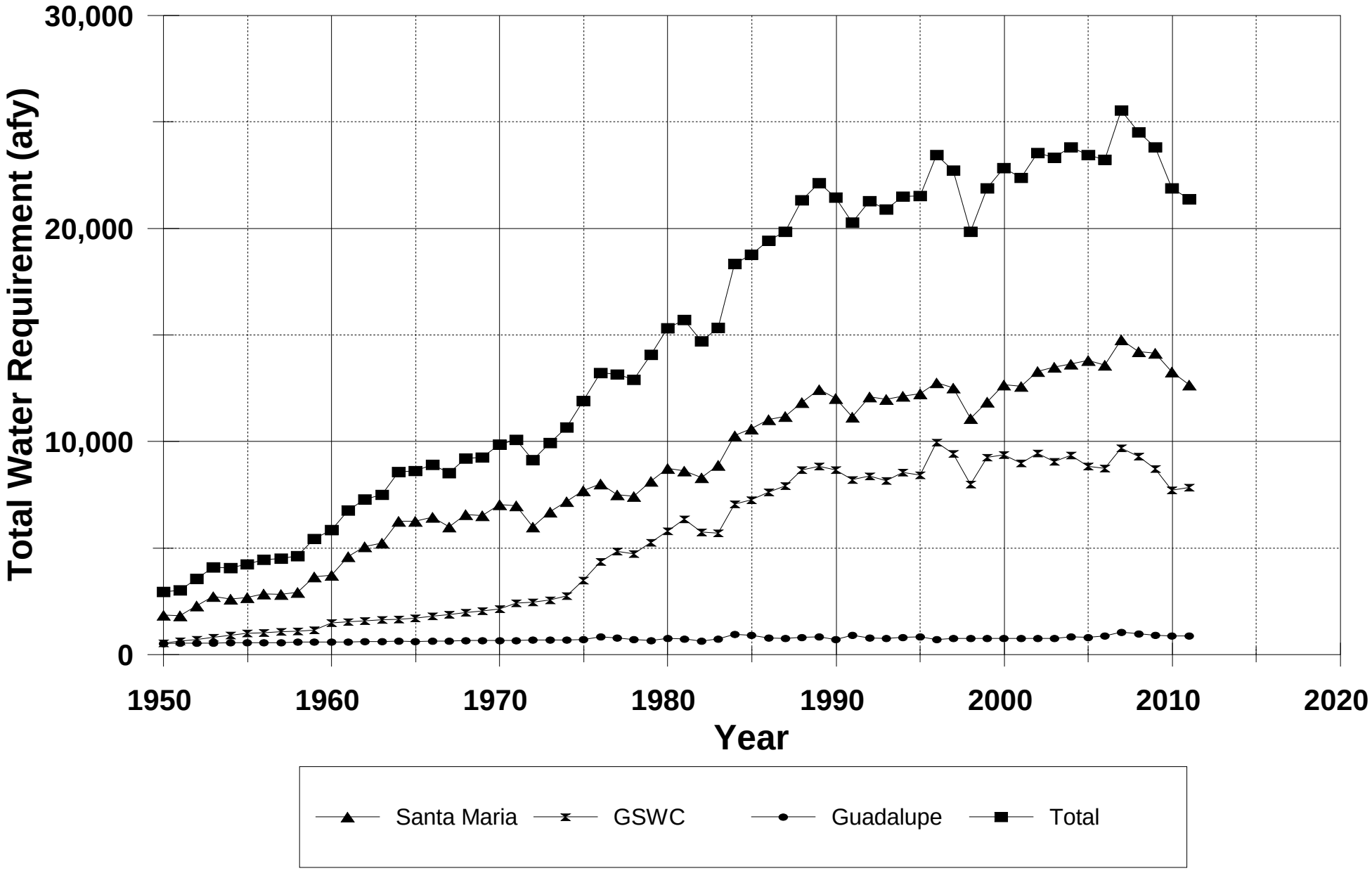

LUHDORFF & SCALMANINI
CONSULTING ENGINEERS

Figure 3.2-1c
Historical Municipal Water Requirements
Santa Maria Valley Management Area

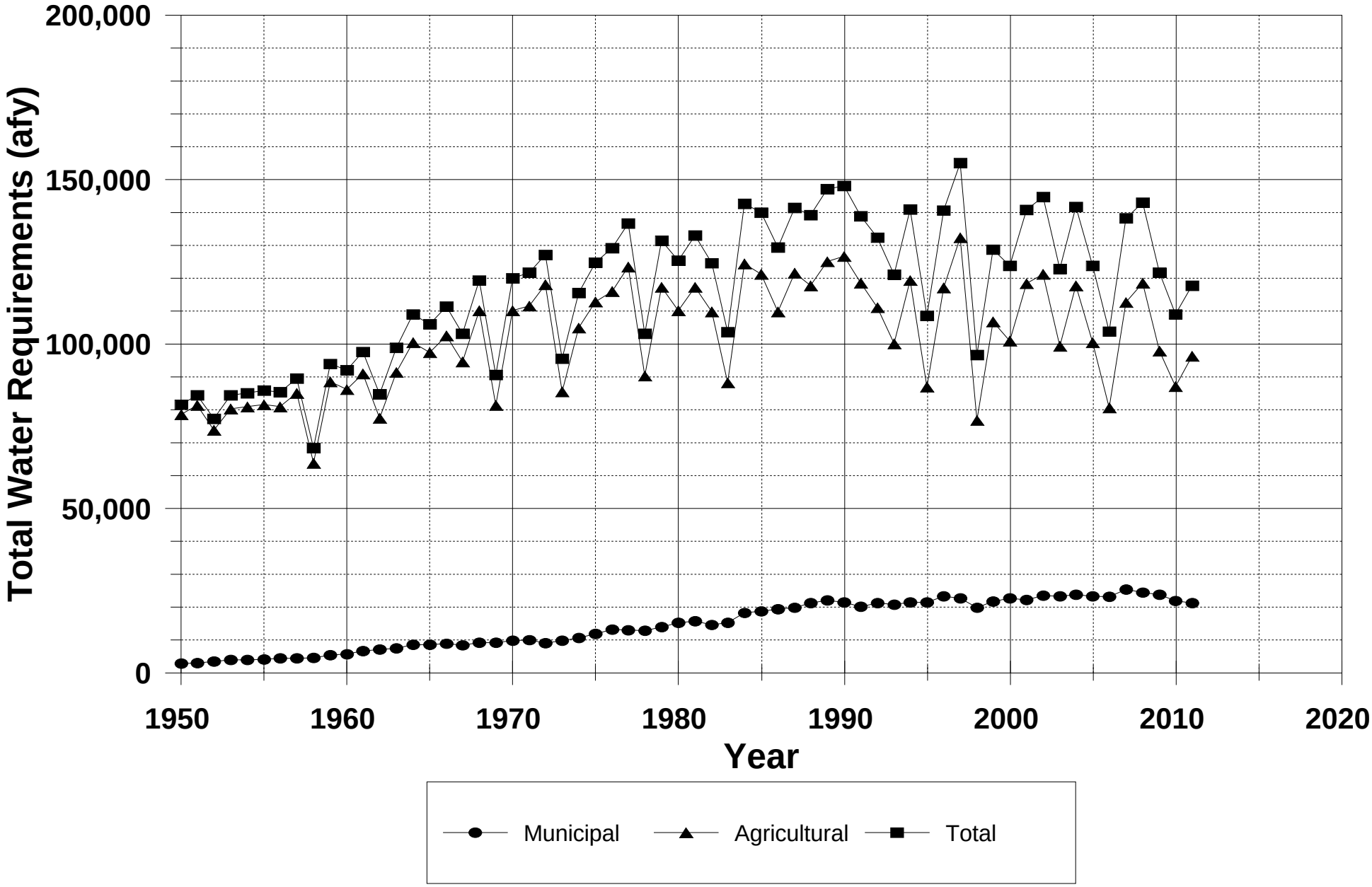

LUHDORFF & SCALMANINI
CONSULTING ENGINEERS

Figure 3.3-1
Historical Total Water Requirements
Santa Maria Valley Management Area

Table 3.1-1a
Distribution of Irrigated Acreage, 2011
Santa Maria Valley Management Area

Crop Category	Acreages	
	Individual	Total
Truck Crops		
Rotational Vegetables[1]	34,243	
Strawberries	9,938	44,181
Vineyard		
Wine Grapes	4,561	4,561
Pasture		
Pasture, Alfalfa	320	320
Grain		
Barley, Oat, "Grain"	1,028	1,028
Nursery		
Nursery, Outdoor Container and Transplants	229	229
Orchard		
Deciduous	10	
Citrus, Avocado	24	
Unclassified Orchard	0	34
Fallow		
Fallow	528	528
Total		**50,881**

1) Rotational Vegetables include lettuce, broccoli, cauliflower, celery, spinach, cut flowers, peas, squash, bushberries, beans, tomatillos, and others.

Table 3.1-1b
Historical Distribution of Irrigated Acreage
Land Use Study Years (DWR and LSCE)
Santa Maria Valley Management Area

	Year															
Crop Categories	**1945**	**1959**	**1968**	**1977**	**1985**	**1995**	**1998**	**2001**	**2004**	**2005**	**2006**	**2007**	**2008**	**2009**	**2010**	**2011**
Rotational Vegetables	-----	-----	-----	-----	-----	-----	37,264	38,329	37,645	38,097	36,189	37,015	35,132	33,737	33,850	34,243
Strawberries	-----	-----	-----	-----	-----	-----	3,516	2,731	5,968	5,958	7,553	7,388	9,139	10,375	10,010	9,938
Total Truck	20,000	15,640	15,770	23,000	31,000	39,665	40,780	41,060	43,613	44,055	43,742	44,403	44,271	44,112	43,860	44,181
Vineyard	0	0	95	4,200	5,100	6,148	5,180	5,241	4,311	4,219	4,400	4,492	4,968	4,765	4,675	4,561
Alfalfa	2,200	2,820	5,660	1,500	1,400	0	-----	-----	-----	-----	-----	-----	-----	-----	-----	-----
Pasture	1,000	2,830	3,330	4,600	3,200	1,295	-----	-----	-----	-----	-----	-----	-----	-----	-----	-----
Total Pasture	3,200	5,650	8,990	6,100	4,600	1,295	629	911	457	516	447	322	368	441	321	320
Field	5,000	8,710	11,390	11,500	5,100	734	0	0	0	0	0	0	0	0	0	0
Grain	1,200	40	80	100	640	789	546	947	760	877	837	420	382	580	993	1,028
Nursery	0	0	0	0	0	0	203	215	235	238	219	222	243	239	215	229
Deciduous	50	70	20	50	50	66	-----	-----	-----	15	13	13	13	13	10	10
Citrus	0	0	110	200	550	1,561	-----	-----	-----	18	18	23	23	23	24	24
Total Orchard	50	70	130	250	600	1,627	108	21	24	33	31	36	36	36	34	34
Fallow	4,400	5,430	5,220	4,900	4,200	2,973	790	1,211	932	507	408	900	1,136	1,244	557	528
Total Acreage	**33,850**	**35,540**	**41,675**	**50,050**	**51,240**	**53,231**	**48,236**	**49,606**	**50,332**	**50,445**	**50,084**	**50,795**	**51,404**	**51,417**	**50,655**	**50,881**

Table 3.1-1c

Applied Crop Water Requirements and Total Agricultural Water Requirements, 2011

Santa Maria Valley Management Area

Crop Category	Evapotranspiration of Crop ETc (in)	Effective Precipitation P_E (in)	Evapotranspiration of Applied Water ETaw (in)	Evapotranspiration of Applied Water ETaw (af/ac)	Distribution Uniformity DU (%)	Applied Water AW (af/ac)	Crop Acreage	Estimated Water Requirements (af)
Rotational Vegetables[1]	24.00	2.36	21.64	1.80	80	2.25	34,243	77,186
Strawberries[1]	17.15	3.67	13.01	1.08	85	1.28	9,938	12,674
Vineyard[2]	---	---	12.0	1.0	95	1.1	4,561	4,801
Pasture[1]	45.39	10.17	35.23	2.94	80	3.67	320	1,174
Grain[2]	---	---	0.0	0.0	80	0.0	1,028	0
Nursery[3]	---	---	---	---	---	2.0	229	458
Deciduous[2]	---	---	26.4	2.2	85	2.6	10	26
Avocado[2]	---	---	28.8	2.4	85	2.8	24	68
Fallow[4]	---	---	---	---	---	---	528	---
Total							**50,881**	**96,387**

1) CIMIS-based applied crop water duties

2) Reported ETaw-based applied crop water duties

3) NMMA applied crop water duty, 2009

4) No applied water

Table 3.2-1a
Municipal Groundwater Pumpage in 2011
Santa Maria Valley Management Area
(in acre-feet)

City of Santa Maria

Well	January	February	March	April	May	June	July	August	September	October	November	December	Total
9S	0.0	0.0	0.0	0.0	0.0	0.0	0.0	0.0	0.0	0.0	0.0	0.0	0
10S	0.3	0.0	0.6	0.0	0.0	0.0	27.4	40.1	1.3	0.0	9.9	0.0	80
11S	17.2	0.0	0.0	0.0	0.0	0.0	0.0	0.0	0.1	0.5	216.5	11.9	246
12S	0.0	0.0	2.1	0.0	31.1	8.3	3.2	18.1	5.5	12.7	63.2	0.0	144
13S	17.3	0.0	23.2	34.9	0.0	0.0	46.8	0.0	6.5	20.9	81.2	2.2	233
14S	87.9	96.6	24.8	17.0	16.9	0.0	0.9	0.0	12.1	44.8	159.8	6.1	467
Purveyor Total	**122.7**	**96.6**	**50.8**	**52.0**	**48.0**	**8.3**	**78.3**	**58.2**	**25.5**	**78.9**	**530.7**	**20.2**	**1,170**

Golden State Water Company

Orcutt System

Well	January	February	March	April	May	June	July	August	September	October	November	December	Total
Crescent #1	0.0	0.0	0.0	0.0	26.2	101.7	93.2	97.7	92.2	106.4	92.7	100.1	710.14
Kenneth #1	117.6	103.8	98.6	129.8	141.3	137.4	143.9	143.3	136.8	111.4	43.6	64.1	1371.61
Mira Flores #1	0.0	0.0	0.0	0.0	27.6	40.7	36.7	29.5	32.9	33.8	25.7	26.9	253.79
Mira Flores #2	50.4	15.9	43.1	31.5	64.6	77.8	70.0	60.1	52.4	22.7	4.0	12.5	504.84
Mira Flores #4	30.4	16.1	26.3	62.1	77.8	65.4	85.5	74.3	80.2	63.1	42.0	25.1	648.15
Mira Flores #5	1.7	4.2	21.0	13.1	29.7	17.4	46.3	67.6	64.2	17.5	19.8	19.0	321.52
Mira Flores #6	78.2	38.9	14.9	48.2	56.8	44.4	90.9	92.5	97.5	56.0	20.7	17.2	656.16
Mira Flores #7	19.4	85.9	40.3	64.7	89.7	90.8	94.8	97.0	44.3	95.4	105.9	120.1	948.26
Oak	0.8	2.6	0.3	54.3	66.7	40.5	60.9	37.2	34.6	31.9	8.3	8.7	346.76
Orcutt	17.5	14.2	21.9	39.3	52.6	8.1	6.8	7.6	13.6	32.5	14.5	16.5	245.08
Woodmere #1	0.0	0.0	0.0	0.0	0.0	0.0	0.0	0.0	0.0	0.0	0.0	0.2	0.20
Woodmere #2	86.3	76.7	63.7	90.9	98.3	95.6	100.8	100.4	96.3	93.5	88.3	91.9	1082.81
System Total	402.4	358.3	330.0	534.0	731.2	719.7	829.9	807.2	745.0	664.1	465.4	502.2	7,090

Lake Marie System

Well	January	February	March	April	May	June	July	August	September	October	November	December	Total
Lake Marie #3	0.0	0.0	0.0	0.0	0.0	0.0	0.0	0.0	0.0	0.0	0.0	0.0	0
Vineyard #4	0.0	0.0	0.0	0.0	0.0	0.0	0.0	0.0	0.0	0.0	0.0	0.0	0
Vineyard #5	9.8	10.2	11.7	17.2	26.8	22.4	28.4	26.6	25.5	20.9	13.6	13.6	227
System Total	9.8	10.2	11.7	17.2	26.8	22.4	28.4	26.6	25.5	20.9	13.6	13.6	227

Tanglewood System

Well	January	February	March	April	May	June	July	August	September	October	November	December	Total
Tanglewood #1	0.0	0.0	0.0	0.1	0.1	0.0	0.0	0.0	0.0	0.0	7.7	0.0	8
System Total	0.0	0.0	0.0	0.1	0.1	0.0	0.0	0.0	0.0	0.0	7.7	0.0	**8**

Sisquoc System

Well	January	February	March	April	May	June	July	August	September	October	November	December	Total
Foxen Cyn #4	2.2	2.4	2.7	4.5	5.2	5.5	7.2	6.6	5.0	3.9	3.0	1.7	50
System Total	2.2	2.4	2.7	4.5	5.2	5.5	7.2	6.6	5.0	3.9	3.0	1.7	**50**
Purveyor Total	**414.4**	**370.9**	**344.5**	**555.7**	**763.3**	**747.6**	**865.5**	**840.3**	**775.6**	**688.8**	**489.7**	**517.6**	**7,375**

City of Guadalupe

Well	January	February	March	April	May	June	July	August	September	October	November	December	Total
Obispo	64.5	58.6	64.5	70.7	78.0	77.9	70.4	49.9	45.8	43.5	53.2	36.4	713
Purveyor Total	**64.5**	**58.6**	**64.5**	**70.7**	**78.0**	**77.9**	**70.4**	**49.9**	**45.8**	**43.5**	**53.2**	**36.4**	**713**

Total Municipal Pumpage	**9,258**

Table 3.2-1b
Municipal State Water Project Deliveries in 2011
Santa Maria Valley Management Area
(in acre-feet)

City of Santa Maria

	January	February	March	April	May	June	July	August	September	October	November	December	Total
SWP Deliveries	716.0	713.0	768.0	990.0	1,239.0	1,211.0	1,327.0	1,310.0	1,210.0	1,073.0	376.0	852.0	11,785
Transfers to GSWC	19.7	31.9	44.9	50.3	38.2	12.8	28.0	24.5	18.2	11.0	6.3	4.6	290
Purveyor Total	**696.3**	**681.1**	**723.1**	**939.7**	**1,200.8**	**1,198.2**	**1,299.0**	**1,285.5**	**1,191.8**	**1,062.0**	**369.7**	**847.4**	**11,495**

Golden State Water Company

	January	February	March	April	May	June	July	August	September	October	November	December	Total
Orcutt System													
Transfers from Santa Maria	19.7	31.9	44.9	50.3	38.2	12.8	28.0	24.5	18.2	11.0	6.3	4.6	290
System Total	19.7	31.9	44.9	50.3	38.2	12.8	28.0	24.5	18.2	11.0	6.3	4.6	290
Tanglewood System													
SWP Deliveries	12.8	11.8	12.4	14.2	17.6	17.9	21.0	19.5	18.0	15.8	5.0	13.0	179
System Total	12.8	11.8	12.4	14.2	17.6	17.9	21.0	19.5	18.0	15.8	5.0	13.0	179
Purveyor Total	**32.5**	**43.7**	**57.3**	**64.5**	**55.8**	**30.7**	**49.0**	**44.0**	**36.2**	**26.8**	**11.3**	**17.6**	**469**

City of Guadalupe

	January	February	March	April	May	June	July	August	September	October	November	December	Total
SWP Deliveries	0.0	0.0	0.0	0.0	0.0	0.0	14.2	36.4	34.7	36.1	15.0	35.8	172
Purveyor Total	**0.0**	**0.0**	**0.0**	**0.0**	**0.0**	**0.0**	**14.2**	**36.4**	**34.7**	**36.1**	**15.0**	**35.8**	**172**

Total Municipal Deliveries 12,136

Table 3.2-1c
Historical Municipal Water Requirements and Supplies
Santa Maria Valley Management Area

	Groundwater Pumping (afy)				State Water Project Deliveries (afy)								Total Municipal Water Supplies (afy)			
					City of Santa Maria			Golden State Water Company								
Year	City of Santa Maria	Golden State Water Company	City of Guadalupe	Total	SWP Deliveries to City of Santa Maria	Transfers to Golden State Water Company	Net Total	SWP Deliveries to Golden State Water Company	Transfers from City of Santa Maria	Net Total	City of Guadalupe	Total	City of Santa Maria	Golden State Water Company	City of Guadalupe	Total
1950	1,866	550	533	**2,949**	-----	-----	-----	-----	-----	-----	-----	**0**	1,866	550	533	**2,949**
1951	1,847	640	540	**3,027**	-----	-----	-----	-----	-----	-----	-----	**0**	1,847	640	540	**3,027**
1952	2,298	730	548	**3,576**	-----	-----	-----	-----	-----	-----	-----	**0**	2,298	730	548	**3,576**
1953	2,732	820	556	**4,108**	-----	-----	-----	-----	-----	-----	-----	**0**	2,732	820	556	**4,108**
1954	2,610	910	563	**4,083**	-----	-----	-----	-----	-----	-----	-----	**0**	2,610	910	563	**4,083**
1955	2,688	1,000	566	**4,254**	-----	-----	-----	-----	-----	-----	-----	**0**	2,688	1,000	566	**4,254**
1956	2,866	1,040	574	**4,480**	-----	-----	-----	-----	-----	-----	-----	**0**	2,866	1,040	574	**4,480**
1957	2,845	1,080	582	**4,507**	-----	-----	-----	-----	-----	-----	-----	**0**	2,845	1,080	582	**4,507**
1958	2,930	1,120	590	**4,640**	-----	-----	-----	-----	-----	-----	-----	**0**	2,930	1,120	590	**4,640**
1959	3,676	1,160	598	**5,434**	-----	-----	-----	-----	-----	-----	-----	**0**	3,676	1,160	598	**5,434**
1960	3,749	1,500	600	**5,849**	-----	-----	-----	-----	-----	-----	-----	**0**	3,749	1,500	600	**5,849**
1961	4,618	1,544	608	**6,771**	-----	-----	-----	-----	-----	-----	-----	**0**	4,618	1,544	608	**6,771**
1962	5,083	1,588	617	**7,288**	-----	-----	-----	-----	-----	-----	-----	**0**	5,083	1,588	617	**7,288**
1963	5,245	1,633	626	**7,503**	-----	-----	-----	-----	-----	-----	-----	**0**	5,245	1,633	626	**7,503**
1964	6,267	1,677	634	**8,578**	-----	-----	-----	-----	-----	-----	-----	**0**	6,267	1,677	634	**8,578**
1965	6,282	1,725	633	**8,640**	-----	-----	-----	-----	-----	-----	-----	**0**	6,282	1,725	633	**8,640**
1966	6,476	1,810	642	**8,927**	-----	-----	-----	-----	-----	-----	-----	**0**	6,476	1,810	642	**8,927**
1967	5,993	1,894	651	**8,538**	-----	-----	-----	-----	-----	-----	-----	**0**	5,993	1,894	651	**8,538**
1968	6,580	1,979	660	**9,219**	-----	-----	-----	-----	-----	-----	-----	**0**	6,580	1,979	660	**9,219**
1969	6,538	2,064	669	**9,271**	-----	-----	-----	-----	-----	-----	-----	**0**	6,538	2,064	669	**9,271**
1970	7,047	2,150	666	**9,863**	-----	-----	-----	-----	-----	-----	-----	**0**	7,047	2,150	666	**9,863**
1971	7,000	2,415	675	**10,090**	-----	-----	-----	-----	-----	-----	-----	**0**	7,000	2,415	675	**10,090**
1972	6,000	2,460	685	**9,145**	-----	-----	-----	-----	-----	-----	-----	**0**	6,000	2,460	685	**9,145**
1973	6,700	2,565	694	**9,959**	-----	-----	-----	-----	-----	-----	-----	**0**	6,700	2,565	694	**9,959**
1974	7,200	2,770	704	**10,674**	-----	-----	-----	-----	-----	-----	-----	**0**	7,200	2,770	704	**10,674**
1975	7,700	3,500	714	**11,914**	-----	-----	-----	-----	-----	-----	-----	**0**	7,700	3,500	714	**11,914**
1976	8,033	4,367	845	**13,245**	-----	-----	-----	-----	-----	-----	-----	**0**	8,033	4,367	845	**13,245**
1977	7,509	4,868	781	**13,158**	-----	-----	-----	-----	-----	-----	-----	**0**	7,509	4,868	781	**13,158**
1978	7,446	4,743	722	**12,911**	-----	-----	-----	-----	-----	-----	-----	**0**	7,446	4,743	722	**12,911**
1979	8,142	5,274	666	**14,082**	-----	-----	-----	-----	-----	-----	-----	**0**	8,142	5,274	666	**14,082**
1980	8,754	5,820	762	**15,336**	-----	-----	-----	-----	-----	-----	-----	**0**	8,754	5,820	762	**15,336**
1981	8,621	6,366	738	**15,725**	-----	-----	-----	-----	-----	-----	-----	**0**	8,621	6,366	738	**15,725**
1982	8,313	5,765	648	**14,726**	-----	-----	-----	-----	-----	-----	-----	**0**	8,313	5,765	648	**14,726**
1983	8,903	5,714	733	**15,350**	-----	-----	-----	-----	-----	-----	-----	**0**	8,903	5,714	733	**15,350**
1984	10,299	7,079	961	**18,339**	-----	-----	-----	-----	-----	-----	-----	**0**	10,299	7,079	961	**18,339**
1985	10,605	7,276	908	**18,789**	-----	-----	-----	-----	-----	-----	-----	**0**	10,605	7,276	908	**18,789**
1986	11,033	7,625	798	**19,456**	-----	-----	-----	-----	-----	-----	-----	**0**	11,033	7,625	798	**19,456**
1987	11,191	7,916	757	**19,864**	-----	-----	-----	-----	-----	-----	-----	**0**	11,191	7,916	757	**19,864**
1988	11,849	8,678	823	**21,350**	-----	-----	-----	-----	-----	-----	-----	**0**	11,849	8,678	823	**21,350**
1989	12,464	8,860	828	**22,152**	-----	-----	-----	-----	-----	-----	-----	**0**	12,464	8,860	828	**22,152**
1990	12,052	8,691	724	**21,467**	-----	-----	-----	-----	-----	-----	-----	**0**	12,052	8,691	724	**21,467**
1991	11,170	8,210	908	**20,288**	-----	-----	-----	-----	-----	-----	-----	**0**	11,170	8,210	908	**20,288**
1992	12,116	8,381	798	**21,295**	-----	-----	-----	-----	-----	-----	-----	**0**	12,116	8,381	798	**21,295**
1993	11,984	8,174	757	**20,915**	-----	-----	-----	-----	-----	-----	-----	**0**	11,984	8,174	757	**20,915**
1994	12,129	8,571	823	**21,523**	-----	-----	-----	-----	-----	-----	-----	**0**	12,129	8,571	823	**21,523**
1995	12,267	8,447	828	**21,542**	-----	-----	-----	-----	-----	-----	-----	**0**	12,267	8,447	828	**21,542**
1996	12,780	9,960	724	**23,464**	-----	-----	-----	-----	-----	-----	-----	**0**	12,780	9,960	724	**23,464**
1997	8,016	9,441	603	**18,060**	4,506	0	4,506	0	0	0	175	**4,681**	12,522	9,441	778	**22,741**
1998	411	7,922	545	**8,878**	10,674	0	10,674	79	0	79	233	**10,986**	11,085	8,001	778	**19,865**
1999	454	9,044	545	**10,043**	11,405	0	11,405	219	0	219	233	**11,857**	11,859	9,263	778	**21,900**
2000	548	9,131	545	**10,224**	12,174	42	12,132	226	42	268	233	**12,633**	12,679	9,399	778	**22,856**
2001	2,699	8,772	545	**12,016**	9,914	20	9,894	217	20	237	233	**10,364**	12,594	9,009	778	**22,380**
2002	468	9,211	545	**10,224**	12,879	35	12,844	220	35	255	233	**13,332**	13,312	9,466	778	**23,556**
2003	1,178	8,866	545	**10,589**	12,325	4	12,321	201	4	205	233	**12,759**	13,499	9,071	778	**23,349**
2004	1,223	9,159	487	**10,869**	12,427	0	12,427	197	0	197	345	**12,969**	13,650	9,356	832	**23,838**
2005	897	8,626	452	**9,975**	12,960	43	12,917	177	43	220	362	**13,499**	13,814	8,846	814	**23,474**
2006	543	8,511	412	**9,466**	13,128	61	13,067	182	61	243	471	**13,781**	13,610	8,754	883	**23,247**
2007	2,550	9,393	580	**12,523**	12,352	120	12,232	197	120	317	483	**13,032**	14,782	9,710	1,063	**25,555**
2008	6,631	9,083	636	**16,350**	7,652	48	7,604	180	48	228	361	**8,193**	14,235	9,311	997	**24,543**
2009	6,615	8,463	879	**15,957**	7,641	84	7,557	182	84	266	38	**7,861**	14,172	8,729	917	**23,818**
2010	3,087	7,487	880	**11,454**	10,279	72	10,207	176	72	248	0	**10,455**	13,294	7,735	880	**21,909**
2011	1,170	7,375	713	**9,258**	11,785	290	11,495	179	290	469	172	**12,136**	12,665	7,844	885	**21,394**

estimated

731af reported total for 2000
(total use or total groundwater)

Table 3.3-1a
Total Water Requirements and Supplies 2011
Santa Maria Valley Management Area
(acre-feet)

Water Use Category	Water Requirements	Water Supplies			
		Groundwater	SWP imported	SWP transfer[1]	Net SWP
Agricultural					
Total	**96,387**	**96,387**	**--**	**--**	**--**
Municipal					
City of Santa Maria	12,665	1,170	11,785	-290	11,495
Golden State Water Company	7,844	7,375	179	290	469
City of Guadalupe	885	713	172	--	172
Total	**21,394**	**9,258**	**12,136**	**--**	**12,136**
SMVMA Total	**117,781**	**105,645**			**12,136**

[1]Transfer within SMVMA from Santa Maria to Golden State Water Company

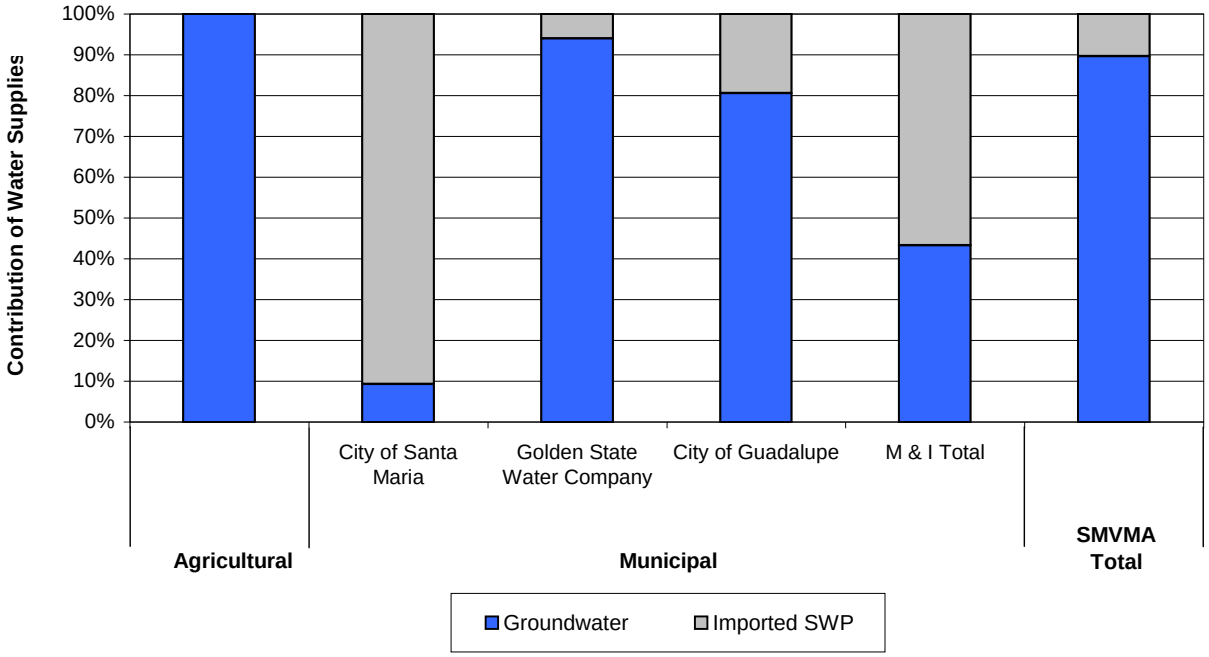

Table 3.3-1b
Recent Historical Total Water Supplies
Santa Maria Valley Management Area
(Acre-feet)

Year	*Total Groundwater*	*Total Imported SWP Water*	**Total Water Supply**
1990	148,254	0	**148,254**
1991	138,963	0	**138,963**
1992	132,461	0	**132,461**
1993	121,124	0	**121,124**
1994	140,956	0	**140,956**
1995	108,640	0	**108,640**
1996	140,691	0	**140,691**
1997	150,451	4,681	**155,132**
1998	85,778	10,986	**96,765**
1999	117,013	11,857	**128,870**
2000	111,306	12,633	**123,938**
2001	130,532	10,364	**140,896**
2002	131,557	13,332	**144,889**
2003	110,099	12,759	**122,859**
2004	128,799	12,969	**141,768**
2005	110,469	13,499	**123,968**
2006	90,130	13,781	**103,911**
2007	125,318	13,032	**138,350**
2008	134,962	8,193	**143,155**
2009	114,042	7,861	**121,903**
2010	98,668	10,455	**109,123**
2011	105,645	12,136	**117,781**

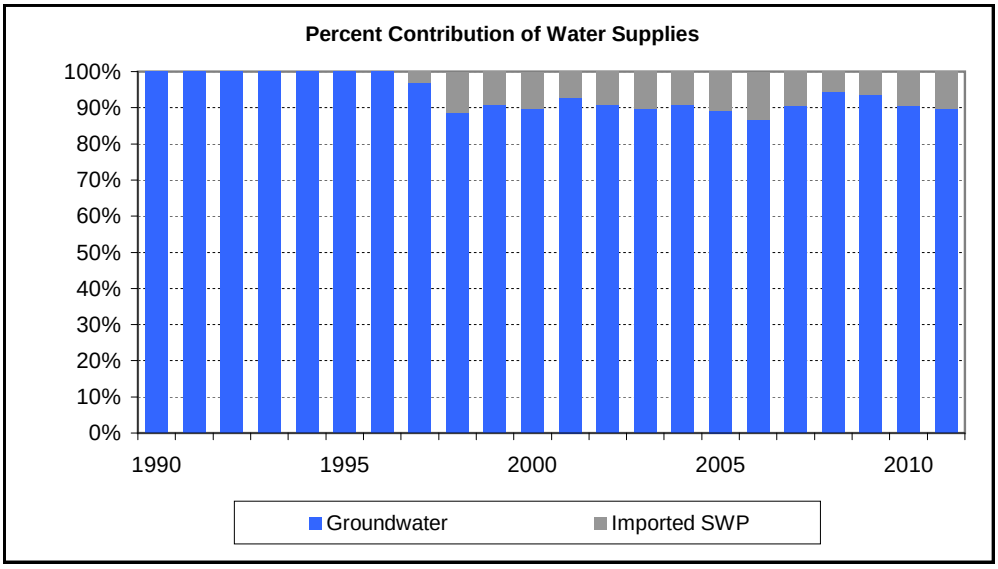

4. Water Disposition

The Stipulation directs that there be an annual accounting of the disposition of water supplies in the SMVMA. The primary uses of water in the SMVMA are for agricultural irrigation and for domestic and related municipal uses, as detailed in Chapter 3, where most of the water is consumptively used. The balance of water supplies primarily flow, or are disposed, back to the groundwater basin via deep percolation of applied irrigation that exceeds agricultural crop water requirements, via deep percolation of landscape or other non-agricultural irrigation, and via purposeful infiltration of treated municipal waste water. Other disposition of water in the SMVMA includes purposeful consumptive use (evapotranspiration) via spray irrigation for disposal of some treated municipal waste water, injection of brine derived from reverse osmosis treatment, minor agricultural drainage in localized areas of low surface elevation and high shallow groundwater levels and, potentially, purposeful export of water to another management area. This chapter quantitatively addresses the two largest of the preceding components of water disposition, deep percolation of applied irrigation and discharge of treated municipal waste water. It also includes estimated return flows from landscape irrigation. No data are available with regard to agricultural drainage, so there is no quantitative discussion of that component of disposition herein. With regard to other aspects of water supply and disposition, the Stipulation includes provisions for future intra-basin export of water from the SMVMA to the adjacent NMMA; potential water sales from the City of Santa Maria to the Nipomo Community Services District (Nipomo CSD), and the technical concerns regarding that planned sale initially expressed in the 2008 SMVMA Annual Report, are further discussed below.

4.1 Agricultural Return Flows

The largest component of overall return flows in the SMVMA originates as applied water for agricultural irrigation. Except for local areas near the Santa Maria River toward the western end of the SMVMA where subsurface drainage removes shallow groundwater beneath irrigated lands, applied irrigation in excess of crop water requirements is considered to deep percolate beyond crop rooting depths and result in return flows to groundwater. The estimation of agricultural water requirements and associated groundwater pumping, as described in Section 3.1, is based on crop areas, respective crop water requirements, and estimated performance of various irrigation systems. For the range of crops and irrigation systems in the SMVMA, most crops are considered to consumptively use about 80 to 85 percent of the water applied to them, resulting in an estimated 15 to 20 percent of applied water exceeding crop consumption and deep percolating as return flow to the underlying aquifer system (the one exception to the preceding ranges is wine grapes, where 95% of applied water is estimated to be consumptively used, resulting in return flow of only 5% of applied water).

For the full range of crop categories in the SMVMA, return flow rates in 2011 are estimated to range from less than 0.1 af/ac for Vineyard, to about 0.4 af/ac for the predominant Rotational Vegetables in the Valley, to a maximum of about 0.7 af/ac for Pasture. The respective estimated agricultural return flow rates are detailed in Table 4.1-1. When combined with their respective individual crop acreages, it is estimated that just under 18,000 af of applied agricultural irrigation deep percolated to groundwater as return flows in the SMVMA in 2011.

4.2 Treated Municipal Waste Water Discharge

There are three municipal waste water treatment plants in the SMVMA: the City of Santa Maria Plant located west of the City; the Laguna Sanitation District Plant west of the Santa Maria Airport; and the City of Guadalupe Plant west of the City (see Figure 1.3-1a). At the City of Santa Maria WWTP, influent volumes are metered and recorded, and all treated water is discharged to percolation ponds near Green Canyon adjacent to the Plant facilities. At the Laguna Sanitation District WWTP, influent volumes are metered and recorded, and the large majority of treated water (95%) is discharged to permanent spray fields north and west of the Plant facilities and to Santa Maria airport lands for irrigation. Of the remaining effluent, a small amount (3%) is brine derived from reverse osmosis treatment of part of the total waste water flow; that brine is discharged to a deep injection well (a converted oil well, completed below the base of fresh groundwater). The balance of effluent (2%) is conveyed to an oil lease near Orcutt for industrial use. At the City of Guadalupe WWTP, influent volumes are recorded and all treated water is discharged to permanent spray fields north of the Plant facilities, across the Santa Maria River (with storage pond north of the facility).

Monthly influent data from 2011 are shown by facility and method of disposal in Table 4.2-1. For all three plants, effluent volumes are estimated to be 90 percent of the metered influent, with the remainder assumed to be lost (consumed) during treatment. During January through May of 2011, the Guadalupe Plant flow meter was nonoperational, precluding the collection of influent data. Metering of plant influent resumed in June. Since the City of Guadalupe's total water requirements in 2010 and 2011 differed only slightly from 2009 (approx. 5 percent), and for purposes of accounting 2011 return flows from the plant, the metered influent data from January through May 2009 were utilized in this report, along with the metered influent data from June through December 2011 as shown in Table 4.2-1.

In 2011, an estimated 10,820 af of treated municipal waste water were discharged in the SMVMA. About 75 percent (8,100 af) of that total was discharged to the percolation ponds of the City of Santa Maria WWTP. About 2,000 af of treated water were discharged to spray irrigation of permanent pasture of the Laguna Sanitation District WWTP and irrigation of Santa Maria airport lands. Approximately 70 af of brine were discharged by deep well injection and 40 af of treated water were utilized for industrial purposes on an oil lease near Orcutt. Slightly less than 600 af of treated water were discharged to spray irrigation by the City of Guadalupe.

The Stipulation has provisions for each of the municipal water purveyors in the SMVMA to have rights to recover return flows that derive from their respective importations of water from the SWP. Those rights are to specific fractions of SWP water use in the preceding year; they are limited in time to recovery in the following year, and thus do not carry over or otherwise accumulate in the basin. The respective fractions for the three municipal purveyors are 65 percent for Santa Maria and 45 percent each for Southern California Water Company (now GSWC) and for Guadalupe. The Stipulation is silent as to the basis for the respective fractions; logically, however, they would have some basis in the fate of imported SWP water, i.e. what fraction ends up being "disposed" as a "return flow" to the groundwater basin.

Interpretation of the municipal water supplies and waste water processes in the SMVMA in 2011 suggests that the 65 percent "return flow" fraction for Santa Maria is approximately representative of the relative amount of overall Santa Maria water supply that primarily ends up as effluent discharged to spreading basins for infiltration to the groundwater basin. While the 8,100 af of estimated effluent in Table 4.2.1 is mostly reflective of water that originates as Santa Maria water supply, it is slightly inflated by the net interception of some waste water, by the Santa Maria sewer system, from Orcutt (originally from GSWC water supply). On the other hand, effluent from the Santa Maria WWTP does not account for "return flows" that derive from landscape irrigation with municipal water supply. Deduction of the former and addition of the latter suggest that, depending on how much actually infiltrates from the spreading basins, the net "return flow" to groundwater from the Santa Maria municipal water supply system could be as high as 65 percent of its total water supply. Since the Santa Maria water supply is a commingled combination of groundwater and SWP water, the "return flow" fraction attributable to SWP water would be the same as that for the commingled supply. An accounting of waste stream volumes from the different sources as influent to the Santa Maria WWTP (Santa Maria and GSWC) and supporting calculations of the different types of return flows (WWTP and landscape irrigation) for 2011 is provided in Table 4.2-2.

Interpretation of the GSWC/Laguna Sanitation District and Guadalupe water supplies and waste water processes in 2011 suggests that the 45 percent return flow fractions in the Stipulation are not representative of relative amounts of those respective water supplies that end up as groundwater recharge which, in turn, would be recoverable by pumping from the basin. In the case of Guadalupe, metered influent to the treatment plant represents approximately 75 percent of its water supply, and estimated effluent is equal to about 68 percent of its water supply. While both fractions exceed the 45 percent return flow fraction in the Stipulation, the disposal method (spray irrigation) is not conducive to groundwater recharge but is, conversely, conducive to consumption of the effluent by evapotranspiration. Ignoring the fact that the Guadalupe spray field is located over an area where the deeper part of the aquifer system is confined, constraining the effectiveness of recharge via application at the ground surface, a reasonable estimate of any deep percolation beneath the Guadalupe spray field would be in the range of about 10 to 15 percent of its water supply; addition of return flows from landscape irrigation may increase the overall percentage to around 20 to 22 percent, far less than the stipulated 45 percent.

While the overall sewer and waste water treatment system at the Laguna Sanitation District is more difficult to analyze, the combination of treated volumes and disposal method suggests that far less than the stipulated 45 percent of water supply ends up as groundwater recharge. The metered influent to the Laguna plant represents only about 30 percent of the GSWC water supply to its Orcutt, Lake Marie and Tanglewood systems; estimated effluent represents only about 27 percent of those water supplies. With credit for the net sewer fraction that is intercepted to the Santa Maria plant, those fractions increase to about 37 and 34 percent, respectively. Beyond those low fractions, the spray irrigation disposal method is, as with Guadalupe, not conducive to groundwater recharge. A reasonable estimate of deep percolation to groundwater recharge beneath the Laguna spray field and airport lands would be about 20 percent of the estimated effluent, equivalent to only about 5 percent of the GSWC water supplies. Addition of recharge from waters intercepted to the Santa Maria plant would increase the estimate of return flows to about 7 percent of total GSWC water supplies. Further addition of estimated recharge that

derives from landscape irrigation in the GSWC service area would increase the total return flow fraction to about 18 percent. All the preceding fractions are far less than the stipulated 45 percent. The treated volumes and disposal methods for waters supplied do not support the credit for return flows of SWP water designated for GSWC in the Stipulation.

As long as the existing waste water treatment and disposal processes remain in place at the Laguna Sanitation District and City of Guadalupe WWTPs, there is no technical support for the 45 percent fractions that were included in the Stipulation for GSWC (in the case of Laguna Sanitation District) and Guadalupe to recover return flows from their respective use of SWP water. Any "recovery" of those amounts of water by groundwater pumping would actually be pumping of a much smaller fraction (one-half or less of the 45 percent) of "return flow," with the balance being groundwater unrelated to imported water use by either entity.

Analysis of municipal return flows since 1997, when SWP water importation commenced, shows that the percentages of total water supply as return flow for each purveyor in 2011 are similar to those over the recent historical period, as seen in Table 4.2-2. With a combination of return flows from WWTP effluent, after accounting for varying disposal methods, and return flows from landscape irrigation, the percentages of total water supply for Santa Maria, GSWC, and Guadalupe averaged 66, 18, and 20 percent, respectively since 1997. A detailed analysis of influent amounts, accounting for intercepted waste streams from the GSWC systems to the Santa Maria WWTP and from the City of Santa Maria area to the Laguna Sanitation District WWTP, and disposition of effluent for the three WWTPs since 1997 is included in Appendix D.

4.3 Exported Water

No water was exported from the SMVMA in 2011. However, planning continued in 2011 for future delivery of water from the SMVMA to the NMMA, specifically from the City of Santa Maria to the Nipomo CSD. The Stipulation includes provisions specific to the NMMA for implementation of a Memorandum of Understanding (MOU) between the City and Nipomo CSD that provides for the sale of up to 3,000 af of "supplemental water" per year by Santa Maria to Nipomo; that sale would be equivalent to an intra-basin export from one management area (the SMVMA) to another (the NMMA). Notable actions now completed on that potential sale include certification of environmental documentation and completion of a Wholesale Water Supply Agreement (successor to the MOU) between the City of Santa Maria and the Nipomo CSD.

Both the environmental documentation and the Wholesale Water Supply Agreement describe a potentially phased delivery of supplemental water from Santa Maria whereby Nipomo CSD would purchase minimum quantities of 2,000 afy for the first ten years of the Agreement, 2,500 afy for the next nine years, and 3,000 afy for the balance of the term of the Agreement (through 2085). Deliveries under the Agreement are specified to begin in the first year after completion of pipeline interconnection between Santa Maria and Nipomo CSD; that interconnection was the focus of the certified environmental documentation on the Nipomo CSD "Waterline Intertie" project. Both the environmental documentation and the Wholesale Agreement also describe provisions whereby Nipomo CSD may request delivery of additional supplemental water, up to

an additional 3,200 afy, for a total delivery of 6,200 afy; the latter goes beyond the provisions in the Stipulation for the sale of up to 3,000 afy.

Since the Wholesale Agreement and the environmental documentation on the Waterline Intertie project reflect planned intra-basin export of water from one management area to another, three technical concerns about the planned project were expressed in the initial (2008) annual report for the SMVMA; as included in that report, those technical concerns were:

- "First, while there has apparently been extensive analysis of the need for supplemental water in the NMMA, prior to and through a recently certified EIR on the project, the Nipomo CSD "Waterline Intertie", there has been no analysis to identify the existence of any surplus water in the SMVMA. There has similarly been no analysis of any impacts to water supplies in the SMVMA that might derive from an export as described in the MOU."

- "Second, the MOU includes provisions that the water delivered by Santa Maria shall be of the same quality that the City delivers to its customers; the project EIR notes that the water will be a mix of City groundwater and SWP water. In the year prior to the signing of the MOU, the City delivered an average blend of 87 percent SWP water and 13 percent local groundwater to its customers. In 2008, those respective fractions were 53 percent and 47 percent. Using both sets of fractions for illustration purposes only, the delivery of "supplemental" water to the NMMA could represent about 1,600 to 2,600 afy of SWP water and about 400 to 1,400 afy of groundwater pumped from the SMVMA. There has been no analysis of the source(s), pumping locations, or potential impacts of such groundwater pumping for export from the SMVMA."

- "Finally, and perhaps of greatest concern, there is an apparent conflict with regard to importation and use of SWP water between the Stipulation and the MOU. In the Stipulation provisions specific to the SMVMA, the City of Santa Maria is to import and use within the SMVMA at least 10,000 afy of SWP water. The only exception to that amount of importation and use is in years when SWP availability to Santa Maria is less than 10,000 af; in those years, Santa Maria is to import and use all its available SWP supply in the SMVMA. However, if Santa Maria were to export water in accordance with the MOU in years when its SWP supply was less than 10,000 af (i.e. in years when overall SWP reliability is less than about 60 percent), Santa Maria would be out of compliance with the Stipulation in all those years, leading to more groundwater pumping for municipal supply in the SMVMA than envisioned by the Stipulation."

While no new technical work on the preceding issues was completed in 2011, Santa Maria has initiated efforts to address them as follows. On the first item, the City has listed a combination of water supplies that, in the quantities listed by the City, notably exceed its existing and currently projected water requirements. Those water supplies include appropriative rights to groundwater in the SMVMA, reportedly quantified in the Judgment; a portion of the yield from Twitchell Reservoir operations; SWP supplies; and return flows from SWP use by the City.

While those aggregate supplies exceed the City's water requirements, there remains no analysis to identify whether there are sufficient supplies in the overall SMVMA whereby there is a "surplus" available for intra-basin transfer without causing a shortage in the SMVMA. Through its Utilities Department, the City has maintained a willingness and intent to analyze that issue as part of a larger effort that will include securing additional SWP allocation on a schedule that coincides with the Nipomo CSD being ready to actually request water deliveries from the City. Regarding the latter, the formation of an assessment district to fund the Waterline Intertie project was rejected by Nipomo Mesa property owners on May 9, 2012. The City anticipates considering various options for conducting intra-basin water transfers in the future, either by the original project or by some modified project. The pursuit by the City of additional SWP water allocation will continue for the purpose of at least offsetting projected reductions in reliability of SWP water deliveries, specifically to a projected 60 percent (personal communication, R. Sweet, City of Santa Maria, May 11, 2012).

On the second concern expressed in the 2008 report, the City's blended fractions of SWP water and local groundwater in 2011 were similar to those during the year preceding the signing of the MOU: 91 percent SWP water and 9 percent local groundwater in 2011, compared to 87 and 13 percent, respectively, prior to the MOU. Had the Water Sales Agreement been operational with SWP availability as it was in 2011 (80%), the fractional use of SWP water to a combination of City customers and the Nipomo CSD would have remained constant at about 91 percent; SWP water use in the SMVMA would have decreased from full availability (14,240 af) to about 11,500 af, which was roughly the amount actually imported by the City in 2011. The total groundwater pumping by the City would have increased from about 1,170 af to 1,460 af. As indicated in the 2008 annual report, there has been no analysis of the source(s), pumping locations, or potential impacts of such an increase in groundwater pumping on the SMVMA. While an additional 300 af of groundwater pumping is small relative to the total pumping of just over 105,000 af in 2011, the additional pumping that would have been necessary to meet the obligations of the agreement were much larger in 2008, 2009, and 2010 (LSCE, 2009, 2010, and 2011). As with the first concern discussed above, however, the Santa Maria Utilities Department has maintained a willingness and intent to analyze this second issue in the same manner although on a schedule dependent upon future water transfer planning on the Nipomo Mesa.

On the last concern expressed in the 2008 report, the preceding discussion is a good illustration of the potential conflict between the Stipulation and the Water Sales Agreement (the MOU when included in the Stipulation). Had the Water Sales Agreement been operational with SWP availability as it was in 2011 (80%), and with the City's SWP Table A Amount as it now is (17,800 af), the City would have been able to satisfy both the Water Sales Agreement and the Stipulation. However, this would not have been the case in the previous three years when SWP availability to Santa Maria was less than 10,000 af. Without access to additional SWP water during the previous years, the City could not dedicate all its SWP allocation to the SMVMA (as required by the Stipulation when that allocation is less than 10,000 af) and also deliver any to the Nipomo CSD. In fact, if the Water Sales Agreement were operational, such would be the case in all year-types when SWP allocations are less than about 70 percent.

For reference, Table 4.3-1 is a summary of two scenarios to examine the amounts of SWP water and SMVMA groundwater that would comparatively be delivered to Santa Maria alone (without

the Water Sales Agreement) or to Santa Maria and Nipomo CSD (with the Water Sales Agreement). Both scenarios include water availability and deliveries at various rates of SWP allocation, with one scenario to reflect "current" conditions (2011 City water demand) and 3,000 afy delivery to Nipomo CSD), and the other scenario to reflect projected "future" conditions (buildout City water demand and 6,200 afy delivery to Nipomo CSD).

The City recognizes all the preceding issues and, based on ongoing communication with its Utilities Department, continues work on their resolution, primarily by maintaining efforts to increase its SWP Table A water supply, but on a schedule that recognizes the practical realities that remain to be addressed before the Nipomo CSD will be in a position to request delivery of water under the current or some future modified Sales Agreement. Certainly notable among those practicalities are a yet-to-be completed MOU among water purveyors in the NMMA; however, with the recent rejection by Nipomo Mesa property owners of funding the Waterline Intertie project, more important will be the considerations of future options for any intra-basin water tranfers. While those practicalities are to be addressed in the NMMA, Santa Maria continues work toward ultimately securing up to 10,000 afy of additional SWP allocation from some combination of suspended SWP Table A allocation in Santa Barbara County and unused SWP Table A allocation in San Luis Obispo County. The City's original intention was to secure the additional SWP supplies in order to enable deliveries under the Water Sales Agreement and also satisfy the provisions of the Stipulation, while also attempting to limit its financial commitment to purchase additional SWP supplies until they are certainly needed, i.e. if and when the Nipomo CSD completes all its requirements to actually request water deliveries from Santa Maria. Even with the recent events on the Nipomo Mesa described above, the City intends to continue the pursuit of additional SWP allocation to offset projected reductions in SWP water supply reliability.

Table 4.1-1
Applied Crop Water Requirements, Total Agricultural Water Requirements and Return Flows, 2011
Santa Maria Valley Management Area

Crop Category	Evapotranspiration of Crop ETc (in)	Effective Precipitation P_E (in)	Evapotranspiration of Applied Water ETaw (in)	Evapotranspiration of Applied Water ETaw (af/ac)	Distribution Uniformity DU (%)	Applied Water AW (af/ac)	Crop Acreage	Estimated Water Requirements (af)	Applied Water above ETaw AW-ETaw (in)	Applied Water above ETaw AW-ETaw (ft)	Agricultural Return Flow (af)
Rotational Vegetables[1]	24.00	2.36	21.64	1.80	80	2.25	34,243	77,186	5.4	0.45	15,437
Strawberries[1]	17.15	3.67	13.01	1.08	85	1.28	9,938	12,674	2.3	0.19	1,901
Vineyard[2]	---	---	12.0	1.0	95	1.1	4,561	4,801	0.6	0.05	240
Pasture[1]	45.39	10.17	35.23	2.94	80	3.67	320	1,174	8.8	0.73	235
Grain[2]	---	---	0.0	0.0	80	0.0	1,028	0	0.0	0.00	0
Nursery[3]	---	---	---	---	---	2.0	229	458	4.8	0.40	92
Deciduous[2]	---	---	26.4	2.2	85	2.6	10	26	4.7	0.39	4
Avocado[2]	---	---	28.8	2.4	85	2.8	24	68	5.1	0.42	10
Fallow[4]	---	---	---	---	---	---	528	---	---	---	---
Total							**50,881**	**96,387**			**17,919**

1) CIMIS-based applied crop water duties

2) Reported ETaw-based applied crop water duties

3) NMMA applied crop water duty; DU assumed as 80%

4) No applied water

Table 4.2-1
Treated Municipal Waste Water Discharge in 2011
Santa Maria Valley Management Area
(in acre-feet)

	City of Santa Maria[1]		Laguna Sanitation District WWTP[2]					City of Guadalupe[3]		Total Municipal Waste Water Discharge					
	Metered Influent	Estimated Effluent	Metered Influent	Estimated Effluent				Metered Influent	Estimated Effluent	Influent	Effluent				
Month	Total (af)	Total (af)	Total (af)	irrigation[4] (af)	injection[5] (af)	industrial use[6] (af)	Total (af)	Total (af)	Total (af)	Total (af)	ponds (af)	irrigation (af)	injection (af)	industrial use (af)	Total (af)
January	684	615	209	179	6	3	188	*53*	48	946	615	227	6	3	851
February	695	625	187	160	6	3	169	*48*	43	930	625	203	6	3	837
March	683	614	215	187	6	1	194	*54*	48	951	614	235	6	1	856
April	659	593	198	172	6	0	178	*54*	49	911	593	221	6	0	820
May	700	630	201	174	6	1	181	*55*	50	956	630	224	6	1	860
June	803	723	191	162	6	4	172	54	49	1,049	723	211	6	4	944
July	784	706	193	162	6	6	174	56	50	1,034	706	212	6	6	930
August	722	649	193	165	6	3	174	55	50	970	649	214	6	3	873
September	799	719	187	159	6	3	168	55	50	1,041	719	209	6	3	937
October	808	727	194	164	6	4	175	57	51	1,059	727	215	6	4	953
November	803	723	193	164	6	4	173	56	50	1,052	723	214	6	4	946
December	865	779	199	166	6	7	179	58	52	1,122	779	218	6	7	1,010
Annual Totals	**9,005**	**8,104**	**2,361**	2,014	72	40	**2,125**	**654**	**589**	**12,020**	8,104	2,603	72	40	**10,818**

1) Total effluent estimated based on assumed loss of 10% during treatment (90% of metered influent); all effluent discharged to ponds.
2) Total effluent estimated as 90% of metered influent; brine discharged to deep injection well and treated water for industrial use is metered, with the balance discharged for irrigation.
3) Total effluent estimated as 90% of metered influent; all effluent discharged to spray fields; *January through May values from 2009/2010 due to prolonged plant flow meter malfunction*.
4) Includes spray irrigation on Laguna SD fields and irrigation on Santa Maria airport lands.
5) Annual total injection volume available; monthly average listed.
6) For industrial use on oil lease near Orcutt.

Table 4.2-2
Estimated Recent Historical Return Flows from WWTPs and Landscape Irrigation
Santa Maria Valley Management Area
(all units in afy unless otherwise noted)

	Total Water Use				Effluent Available for Return Flows					Irrigation Available for Return Flows			Return Flows													
					Santa Maria		GSWC		Guadalupe				Santa Maria					Golden State Water Company					Guadalupe			
Year	SM	GSWC	GSWC[1]	Guad	from WWTP (SM)	from WWTP (LSD)	from WWTP (SM)	from WWTP (LSD)	from WWTP (Guad)	Santa Maria[2]	GSWC[3]	Guadalupe[4]	from WWTP (SM)[5]	from WWTP (LSD)[6]	from landscape irrigation[7]	Total	% of Water Use	from WWTP (SM)[5]	from WWTP (LSD)[6]	from landscape irrigation[7]	Total	% of Water Use[8]	from WWTP (Guad)[6]	from landscape irrigation[7]	Total	% of Water Use
1997	12,522	9,441	9,387	778	7,279	83	296	2,269	420	4,758	4,248	350	7,279	17	952	8,247	66	296	454	850	1,600	16.9	84	70	154	20
1998	11,085	8,001	7,960	778	6,434	82	302	1,874	420	4,212	3,601	350	6,434	16	842	7,293	66	302	375	720	1,397	17.5	84	70	154	20
1999	11,859	9,263	9,193	778	6,899	82	298	2,215	420	4,506	4,169	350	6,899	16	901	7,816	66	298	443	834	1,574	17.0	84	70	154	20
2000	12,679	9,399	9,342	778	7,223	83	309	2,459	420	4,818	4,230	350	7,223	17	964	8,203	65	309	492	846	1,647	17.5	84	70	154	20
2001	12,594	9,009	8,950	778	7,538	83	323	2,500	420	4,786	4,054	350	7,538	17	957	8,511	68	323	500	811	1,634	18.1	84	70	154	20
2002	13,312	9,466	9,409	778	7,661	83	320	2,287	420	5,059	4,259	350	7,661	17	1,012	8,689	65	320	457	852	1,629	17.2	84	70	154	20
2003	13,499	9,071	9,023	778	7,766	83	431	2,281	420	5,130	4,082	350	7,766	17	1,026	8,809	65	431	456	816	1,704	18.8	84	70	154	20
2004	13,650	9,356	9,302	832	8,201	83	399	2,240	449	5,187	4,210	374	8,201	17	1,037	9,255	68	399	448	842	1,689	18.1	90	75	165	20
2005	13,814	8,846	8,802	814	8,374	82	317	1,990	439	5,249	3,981	366	8,374	16	1,050	9,441	68	317	398	796	1,511	17.1	88	73	161	20
2006	13,610	8,754	8,700	883	8,251	81	288	1,724	477	5,172	3,939	397	8,251	16	1,034	9,302	68	288	345	788	1,421	16.2	95	79	175	20
2007	14,782	9,710	9,652	1,063	8,074	81	368	1,854	574	5,617	4,369	478	8,074	16	1,123	9,214	62	368	371	874	1,612	16.6	115	96	210	20
2008	14,235	9,311	9,255	997	8,123	81	444	1,963	570	5,409	4,190	449	8,123	16	1,082	9,222	65	444	393	838	1,675	18.0	114	90	204	20
2009	14,172	8,729	8,668	917	8,057	81	467	1,932	598	5,385	3,928	413	8,057	16	1,077	9,150	65	467	386	786	1,639	18.8	120	83	202	22
2010	13,294	7,735	7,681	880	7,360	80	489	2,022	598	5,052	3,481	396	7,360	16	1,010	8,386	63	489	404	696	1,590	20.6	120	79	199	23
2011	12,665	7,844	7,794	885	7,598	81	506	2,044	589	4,813	3,530	398	7,598	16	963	8,577	68	506	409	706	1,621	20.7	118	80	197	22
																avg	**66**				**avg**	**18**			**avg**	**20**

Estimated

SM City of Santa Maria
GSWC Golden State Water Company
Guad City of Guadalupe
LSD Laguna Sanitation District

1) Excludes Sisquoc System water use (for effluent return flow calculations).
2) Percentage of SM total water use as landscape irrigation = 38 (35 to 38)
3) Percentage of GSWC total water use as landscape irrigation = 45 (45 to 48)
4) Percentage of Guad total water use as landscape irrigation = 45 (24 to 64)
5) All effluent from Santa Maria WWTP percolation ponds assumed as return flows.
6) 20 percent of effluent from Laguna SD and Guadalupe WWTP irrigation assumed as return flows.
7) 20 percent of landscape irrigation assumed as return flows.
8) Percentage of GSWC total water use as return flows.

Table 4.3-1
Water Requirements, Supplies, and Amounts Delivered under Current and Projected Conditions
Santa Maria Valley Management Area

Current Conditions

SWP		Water Requirements			City Water Supply					City Water Delivered**					
		2011								SMVMA			NCSD		
Allocation (%)	**Supply to City** (af)	City (af)	NCSD (af)	Total (af)	SWP (af)	(%)*	Groundwater (af)	(%)*	Total (af)	SWP (af)	Groundwater (af)	Total (af)	SWP (af)	Groundwater (af)	Total (af)
100	17,800	12,700	3,000	15,700	15,700	100	0	0	15,700	12,700	0	12,700	3,000	0	3,000
90	16,020	12,700	3,000	15,700	16,020	102	(320)	(2)	15,700	12,959	(259)	12,700	3,061	(61)	3,000
80	14,240	12,700	3,000	15,700	14,240	91	1,460	9	15,700	11,519	1,181	12,700	2,721	279	3,000
75	13,350	12,700	3,000	15,700	13,350	85	2,350	15	15,700	10,799	1,901	12,700	2,551	449	3,000
70	12,460	12,700	3,000	15,700	12,460	79	3,240	21	15,700	10,079	2,621	12,700	2,381	619	3,000
65	11,570	12,700	3,000	15,700	11,570	74	4,130	26	15,700	9,359	3,341	12,700	2,211	789	3,000
60	10,680	12,700	3,000	15,700	10,680	68	5,020	32	15,700	8,639	4,061	12,700	2,041	959	3,000
50	8,900	12,700	3,000	15,700	8,900	57	6,800	43	15,700	7,199	5,501	12,700	1,701	1,299	3,000
40	7,120	12,700	3,000	15,700	7,120	45	8,580	55	15,700	5,759	6,941	12,700	1,361	1,639	3,000
30	5,340	12,700	3,000	15,700	5,340	34	10,360	66	15,700	4,320	8,380	12,700	1,020	1,980	3,000
20	3,560	12,700	3,000	15,700	3,560	23	12,140	77	15,700	2,880	9,820	12,700	680	2,320	3,000
10	1,780	12,700	3,000	15,700	1,780	11	13,920	89	15,700	1,440	11,260	12,700	340	2,660	3,000

Given:

City Table A (af) = 17,800
City Water Req (af) = 14,235
NCSD Water Req (af) = 3,000

* % of total water requirements by source

** provides for water delivered to be of equal quality

Projected Conditions[1]

SWP		Water Requirements			City Water Supply					City Water Delivered**					
										SMVMA			NCSD		
Allocation (%)	**Supply to City** (af)	City (af)	NCSD (af)	Total (af)	SWP (af)	(%)*	Groundwater (af)	(%)*	Total (af)	SWP (af)	GW (af)	Total (af)	SWP (af)	GW (af)	Total (af)
100	17,800	19,000	6,200	25,200	17,800	71	7,400	29	25,200	13,421	5,579	19,000	4,379	1,821	6,200
90	16,020	19,000	6,200	25,200	16,020	64	9,180	36	25,200	12,079	6,921	19,000	3,941	2,259	6,200
80	14,240	19,000	6,200	25,200	14,240	57	10,960	43	25,200	10,737	8,263	19,000	3,503	2,697	6,200
70	12,460	19,000	6,200	25,200	12,460	49	12,740	51	25,200	9,394	9,606	19,000	3,066	3,134	6,200
65	11,570	19,000	6,200	25,200	11,570	46	13,630	54	25,200	8,723	10,277	19,000	2,847	3,353	6,200
60	10,680	19,000	6,200	25,200	10,680	42	14,520	58	25,200	8,052	10,948	19,000	2,628	3,572	6,200
50	8,900	19,000	6,200	25,200	8,900	35	16,300	65	25,200	6,710	12,290	19,000	2,190	4,010	6,200
40	7,120	19,000	6,200	25,200	7,120	28	18,080	72	25,200	5,368	13,632	19,000	1,752	4,448	6,200
30	5,340	19,000	6,200	25,200	5,340	21	19,860	79	25,200	4,026	14,974	19,000	1,314	4,886	6,200
20	3,560	19,000	6,200	25,200	3,560	14	21,640	86	25,200	2,684	16,316	19,000	876	5,324	6,200
10	1,780	19,000	6,200	25,200	1,780	7	23,420	93	25,200	1,342	17,658	19,000	438	5,762	6,200

Given:

City Table A (af) = 17,800
City Water Req (af) = 19,000
NCSD Water Req (af) = 6,200

* % of total water requirements by source

** provides for water delivered to be of equal quality

1) City projected demand at build-out in 2022; NCSD projected deliveries from City by 2085 per Jan 5, 2010, Agreement

5. Conclusions and Recommendations

Conclusions drawn from analysis of hydrogeologic and water requirement and supply conditions in the SMVMA in 2011 are discussed in the following section, which is in turn followed by recommendations for ongoing data collection, basin management, and future analysis.

5.1 Conclusions

Assessment of hydrogeologic conditions in 2011 showed that groundwater levels and general mineral quality in the shallow and deep aquifer zones remain within historical ranges for the SMVMA. As has historically been the case for several decades, the prevailing gradients for groundwater flow in both zones was reduced (flattened) in the vicinity of local pumping near the Santa Maria Airport, but groundwater flow continued through the area toward the coast where groundwater levels remained above sea level. Concentrations of nitrate in groundwater remained near or below detection limits in the deep aquifer zone, but continued to increase in the shallow zone near Orcutt, where elevated concentrations have resulted in management actions such as the reduction or cessation of municipal pumping from shallow water supply wells. Nitrate concentrations also continued to gradually increase in portions of the aquifer along the coast.

Water requirements, water supplies to meet those requirements, and disposition of water supplies in the SMVMA in 2011 can be summarized as follows. Total water requirements were greater than in 2010, about 117,800 af, comprised of 96,400 af for agricultural irrigation and 21,400 af for municipal supply. Groundwater was the primary water supply, 105,650 af, to meet most of the total water demand; the balance of total water requirements was met by 12,150 af of imported water from the State Water Project.

Disposition of agricultural water supply was primarily to evapotranspiration by crops, which consumptively used about 78,480 af of the applied water; the balance of applied irrigation, nearly 17,920 af, returned to the groundwater basin as deep percolation of applied water not consumptively used by crops. Slightly less than one-half of the municipal supply, about 9,380 af, was consumptively used in the service areas of municipal purveyors. The remainder of total municipal supply, about 12,020 af, was processed at waste water treatment plants. About 8,110 af of treated effluent from those plants are estimated to have returned to the groundwater basin, primarily by surface spreading in infiltration basins and much less through spray irrigation. About 1,200 af are estimated to have been consumed through waste water treatment processes and about 110 af were disposed through deep well injection of waste brine product and for industrial use.

A tabular summary of total water requirements, water supplies, and disposition of water supplies for the SMVMA in 2011 is delineated in Table 5.1. The components of total water requirements remained consistent with volumes and patterns of demand over the last decade.

Table 5.1-1
Summary of 2011 Water Requirements, Water Supplies and Disposition
Santa Maria Valley Management Area
(in acre-feet)

<table>
<tr><th colspan="3">Water Requirements</th><th colspan="4">Water Supplies</th></tr>
<tr><th>Agricultural</th><th>Municipal</th><th>Total</th><th>Groundwater</th><th colspan="2">Imported SWP Water</th><th>Total</th></tr>
<tr><td>96,400</td><td>21,400</td><td>117,800</td><td>105,650</td><td colspan="2">12,150</td><td>117,800</td></tr>
<tr><th colspan="7">Disposition</th></tr>
<tr><th colspan="2">Agriculture</th><th colspan="5">Municipal</th></tr>
<tr><th>Consumption</th><th>Return Flows</th><th>Consumption</th><th colspan="4">Waste Water</th></tr>
<tr><td>78,480</td><td>17,920</td><td>9,380</td><td colspan="4">12,020</td></tr>
<tr><td colspan="2" rowspan="2"></td><td rowspan="2"></td><th>Tmt. Plant Consump.</th><th>Return Flows</th><th>Disposal To Irrig.</th><th>Injection/ Industrial</th></tr>
<tr><td>1,200</td><td>8,110</td><td>2,600</td><td>110</td></tr>
</table>

Reported total irrigated acreage and crop distribution in 2011, about 50,880 acres devoted primarily to truck crops, and the associated applied water requirement, about 96,400 af, are consistent with the generally constant trend in agricultural land use and water requirements in the SMVMA over the last decade. Total irrigated cropland has been generally stable between 48,000 and 52,000 acres, with increased truck crop acreage and a decline in pasture, field, and citrus acreages. The associated applied water requirements had also been generally stable, in the broad range of 80,000 to 120,000 afy, where that range is largely driven by year-to-year weather conditions. The sole source of water supply for agricultural irrigation continues to be groundwater, so groundwater pumping for agricultural purposes was an estimated 96,400 af in 2011. Importantly, the newly installed climate station on the Santa Maria Valley floor provided for enhanced estimation of the 2011 agricultural water requirements in the SMVMA.

Recorded municipal water supplies in 2011 were 9,260 af of groundwater and 12,140 af of imported SWP water to meet a total municipal water requirement of 21,400 af; total municipal demand in 2011 was consistent with the long-term trend of gradually increasing municipal water demand apparent over the last decade, although less than the peak historical municipal demand of 25,600 af in 2007. Groundwater pumping for municipal water supply in 2011 was one-half that of a decade ago, when groundwater pumping met the entire municipal water requirement of approximately 23,000 afy. Also, during several of the intervening years (1998 through 2006), groundwater pumping was less than one half the peak amount. The decrease in municipal groundwater pumping has resulted from the importation and use of SWP water, which began in 1997. In 2011, those importations exceeded the minimum annual amount specified in the Stipulation for the City of Santa Maria; the GSWC used 470 af, also exceeding their specified

minimum amount, and the City of Guadalupe imported 170 af, or 47 percent of their specified minimum amount due to operational problems resolved in July 2011.

With regard to provisions in the Stipulation for each of the municipal purveyors in the SMVMA to have rights to return flows that derive from their respective importations of SWP water, the existing systems for waste water treatment and disposal are such that only the City of Santa Maria actually discharges in a manner that supports the 65 percent return flow fraction in the Stipulation for the City. Waste water treatment and disposal of waters supplied by GSWC and the City of Guadalupe are such that they do not support the 45 percent return flow fraction for either of those purveyors. Until there is some substantial change in either of their respective treatment and disposal schemes, the Stipulation provision that entitles recovery of 45 percent of SWP water to both purveyors should be decreased to a maximum of 20 percent for both GSWC and Guadalupe.

Despite sedimentation that has now filled the former dead pool storage below the conservation pool in Twitchell Reservoir, operation of the Reservoir has, overall, continued to provide conservation of runoff for subsequent release for groundwater recharge in the SMVMA. Sediment removal work completed at the outlet from Twitchell Reservoir and Dam in 2010 facilitated enhanced groundwater recharge in 2011. While the total precipitation in 2011 was essentially average, the nine inches of rain that fell in December 2010 and the early 2011 rainfall resulted in substantial build-up of storage in Twitchell Reservoir for continual release and recharge through all months in 2011. The December 2010 rainfall and early 2011 rainfall produced above-average streamflow in the Sisquoc River and Orcutt Creek, both of which are uncontrolled. With the large amount of Twitchell releases for groundwater recharge, almost 90,000 af or close to double the average amount, along with recharge from the Sisquoc River and Orcutt Creek, groundwater levels in most portions of the SMVMA increased during 2011. In fact, groundwater levels remained within historical fluctuating ranges and did not decline to the point of beginning to define any type of critical water shortage.

General mineral and nitrate concentrations in the Sisquoc River and Orcutt Creek, the only streams in the SMVMA for which water quality data were available, were within historical ranges. As such, Orcutt Creek quality remained degraded with highly elevated concentrations of dissolved salts and nitrate.

Finally, the Stipulation delineates four specific criteria that, when all are met in any given year, define a condition of severe water shortage in the SMVMA; those four criteria are:

- chronic decline in groundwater levels (over period of not less than 5 years);
- groundwater level decline not caused by drought;
- material increase in groundwater use during the five year period; and
- groundwater levels below lowest recorded levels.

While groundwater levels in the SMVMA have gradually declined since about 2000, including between 2009 and 2010, groundwater levels rose in 2011 remained above lowest recorded levels in the SMVMA. Recognizing that generally drier conditions have prevailed over that time, notably resulting in no releases from Twitchell Reservoir in 2002-2004, 2007, 2009, and 2010,

the recent gradual decline in groundwater levels is most likely attributable to climatological conditions. The total groundwater use in 2011, about 105,650 af, was comparable to use during the last decade, which has ranged between 90,000 and 135,000 afy. In summary, conditions in the SMVMA do not satisfy any of the criteria delineated in the Stipulation to define a severe water shortage; as a result, it is concluded that there is no severe water shortage in the SMVMA as of 2011.

5.2 Recommendations

In light of basin conditions related to water requirements and supplies, and related to local water resources, there are no major needs to change things related to those conditions. However, there are a few items that warrant discussion, and they are embedded in these recommendations. Such as data not currently being collected impede various aspects of reporting on conditions in the SMVMA, recommendations regarding collection of those data are included in the monitoring program prepared for the TMA in 2009 and revised in 2010 (Appendix A of this report). While implementation of the entire monitoring program will logically be over a period of time, as recognized in the monitoring program itself, progress toward implementation will allow progressively expanded reporting on conditions in the SMVMA in future annual reports. Examples of continued or expanded monitoring include:

- measurement of groundwater levels on a semi-annual basis in all designated wells;
- groundwater quality sample collection and analysis for inorganic constituents (e.g., general minerals and nitrate) on a biennial basis in the designated water quality wells;
- installation of at least one deep monitoring well north of the City of Santa Maria for inclusion in the monitoring program well networks;
- reactivation of stream gauges, in order of priority: 1) Cuyama River (below Twitchell) and Santa Maria River (near Guadalupe), 2) Sisquoc River tributaries (Foxen, La Brea, and Tepusquet Creeks), and 3) Santa Maria River tributaries (Nipomo and Suey Creeks);
- reporting of stream stage with discharge; and
- collection and analysis of surface water quality samples from Twitchell Reservoir and streams on a biennial basis.

One key aspect of expanded monitoring is coordination of data collection efforts to facilitate consistent interpretation of groundwater flow conditions in the vicinity of the boundary between the SMVMA and the NMMA. Comments on the initial (2008) annual reports for both management areas called attention to differing interpretations and associated indications of the existence or absence of subsurface flow from the SMVMA toward the NMMA. In response to the comments, it was recommended to the TMA that a locally expanded network of wells be developed with an increased frequency (monthly) of groundwater level data collection near that

boundary, with the intent to maximize the use of currently monitored wells in coordination with the NMMA TG.

Until such time as these data are available, and as was done in 2009 and 2010, this 2011 annual report on the SMVMA expanded the interpretation of spring groundwater conditions near the boundary by developing groundwater level contour maps for early and late spring 2011, specifically in Figures 2.1-3a, b, d, and e. The maps show the lowering of static groundwater levels that occurs in both management areas between early and late spring with the commencement of the annual irrigation season. As such, they illustrate the importance of utilizing only groundwater level data from a focused time period, no longer than one or two weeks, in the construction of a spring groundwater level contour map covering the area.

Also apparent from the focused spring contour maps are the limitations in existing monitoring data sets that affect the area of coverage for contouring and, thus, description of groundwater flow conditions between and within the management areas. As described in the previous SMVMA annual reports, spring groundwater level measurements are made in late February or early March in the SMVMA (by USGS) but not in the NMMA, thus extremely limiting the ability to contour groundwater levels in the SMVMA to its boundary with the NMMA (Figure 2.1-3a). In contrast, spring measurements are made in mid-April in the NMMA (by SLODPW) and in the SMVWCD portion of the SMVMA (by SMVWCD) but not in the southern half of the SMVMA, thus precluding contouring of groundwater levels to its southern boundary (Figure 2.1-3b). While the latter map does describe flow conditions at the management area boundary, importantly showing no subsurface flow from the SMVMA toward the NMMA, the contouring is based on a sparse density of wells for a time period in late spring after static groundwater levels have declined tens of feet in response to area pumping for irrigation. Further, contouring efforts still rely on monthly groundwater level data (e.g. February, March, and April) provided by private entities on the southern Nipomo Mesa (GSWC, The Woodlands, Conoco), from their own water supply wells because no data were available from the monitoring agencies mentioned above.

In order to eliminate these data limitations, it is strongly recommended that arrangements be made between the TMA and a third party agency to conduct additional groundwater monitoring in an expanded network of wells near the boundary of the two management areas. At a minimum, the agency would take measurements in a subset of wells on the adjacent portion of the NMMA at the spring (and fall) time periods coinciding with monitoring conducted in the SMVMA. It is envisioned that the Area Engineer would initially work with the third party to develop the subset of wells, coordinating with monitoring agencies and the NMMA TG to draw on area experience and utilize existing well inventories, which likely include such information as well types or uses, locations, depths and screen completions, reference point locations and elevations, owners and access, and historical water level and/or quality data. Further, it is anticipated that the TMA would provide support in agency coordination, in particular with the third party agency, to facilitate implementation of the expanded monitoring work.

Of note in fall 2011, an expanded network of wells was measured for water levels, providing essentially the same areal coverage and density of data for the fall period as is typical for the spring period. This provided improved coverage of the SMVMA for the fall contour maps of

shallow and deep groundwater levels, and it is recommended that a similar effort be made for expanded fall measurements each year. Related to this, some progress was made by the Area Engineer in assessing the consistency in well reference points, measuring points, ground surface elevations, and vertical data (NGVD29 vs. NAVD88) utilized by the various measuring and reporting agencies and water purveyors for wells and water level data, in particular in the Oso Flaco and southern Nipomo Mesa areas, toward the goal of providing consistent and accurate groundwater elevation data and contour maps.

Regarding the existing monitoring program for the SMVMA, it is recommended that the groundwater and surface water monitoring components continue to be updated in 2011 by the Area Engineer. The update would include assessing the current availability of network wells for groundwater level and quality monitoring and of locations suitable for reestablishment of network stream gauges. Completion of the well network assessment would then facilitate planning to implement a groundwater quality monitoring program in the SMVMA. Assessment work would be in coordination with USGS and Santa Barbara County Water Agency staff currently or previously tasked with water resource monitoring activities in the Valley.

Additional points not otherwise included in the monitoring program but useful in future analysis and reporting on the SMVMA include:

- surveying of wellhead reference point elevations at all wells utilized for groundwater level monitoring; and

- definition of municipal water supply well locations (GSWC, Guadalupe) and well completion information (GSWC), for wells with historical groundwater level, quality, and pumpage data.

Beyond components of the overall monitoring program, the most notable recommendation for additional investigation is that the City of Santa Maria continue with its efforts to secure additional SWP entitlement, certainly depending on consideration of future options for intra-basin water transfer with Nipomo Mesa but in a timely manner consistent with any progress as it occurs in its Water Sales Agreement with the Nipomo CSD. The recommended investigation would facilitate the City's compliance with the provisions of the Stipulation regarding importation and use of SWP water in the SMVMA if the Water Sales Agreement becomes operational. Santa Maria should then complete its analysis of the availability of surplus water in the SMVMA (surplus to all the needs in the SMVMA), logically from the additional SWP entitlement, whereby some can be exported beyond the SMVMA. Coincident with the preceding, Santa Maria should also complete its analysis of the sources, pumping locations, and potential impacts of additional groundwater pumping, if any, that would be exported beyond the SMVMA.

Finally, it is recommended that parties in the SMVMA potentially affected by implementation of the instream fisheries study recommendations, such as the City of Santa Maria, GSWC, the Cityof Guadalupe, and the SMVWCD, solicit legal opinion or clarification of whether any compelling basis exists for implementing said recommendations, which would result in permanent reductions in groundwater basin recharge. Related to this, resolution should be made

of any conflict existing between the study recommended diversion of Twitchell Reservoir water for fisheries in the Santa Maria and Sisquoc Rivers and the 2005 Stipulation developed from the basin adjudication. It is recommended that some estimation made of the potential impacts to groundwater levels and quality in the basin from implementation of the study recommendations.

6. References

California DWR (Department of Public Works, Division of Water Resources), 1933.
Ventura County Investigation, DWR Bull. 46, pp. 82 - 90.

California DWR, 1959, 1968, 1977, 1985, and 1995.
Land Use Surveys, Santa Barbara and San Luis Obispo Counties.

California DWR, 1970.
Sea-Water Intrusion: Pismo-Guadalupe Area, DWR Bull. 63-3.

California DWR, 1975.
Vegetative Water Use in California, 1974, DWR Bull. 113-3.

California DWR, 1999.
Water Resources of the Arroyo Grande – Nipomo Mesa Area.

California CCRWQCB, 1995.
Assessment of Nitrate Contamination in Ground Water Basins of the Central Coast Region, Preliminary Working Draft.

City of Santa Maria and Nipomo Community Services District, September 7, 2004.
Memorandum of Understanding by and Between the City of Santa Maria and Nipomo Community Services District.

Douglas Wood & Associates, Inc., March 2009.
Nipomo Community Services District Waterline Intertie, Final Environmental Impact Report (State Clearinghouse No. 2005071114), prepared for Nipomo Community Services District.

Gibbons, T., SMVWCD, 2011. Personal communication.

Hanson, B., and Bendixen, W., 2004.
Drip Irrigation Evaluated in Santa Maria Valley Strawberries, California Agriculture, v. 58, no. 1.

Lippincott, J.B., 1931.
Report on Water Conservation and Flood Control of the Santa Maria River in Santa Barbara and San Luis Obispo Counties, prepared for Santa Barbara County Board of Supervisors.

Luhdorff and Scalmanini, Consulting Engineers, March 2000.
Development of a Numerical Ground-Water Flow Model and Assessment of Ground-Water Basin Yield, Santa Maria Valley Ground-Water Basin, prepared for Santa Maria Valley Water Conservation District.

Luhdorff and Scalmanini, Consulting Engineers, October 2008.
Monitoring Program for the Santa Maria Valley Management Area, prepared for Superior Court of California, County of Santa Clara, and Twitchell Management Authority.

Luhdorff and Scalmanini, Consulting Engineers, April 2009.
2008 Annual Report of Hydrogeologic Conditions, Water Requirements, Supplies, and Disposition, prepared for Superior Court of California, County of Santa Clara, and Twitchell Management Authority.

Luhdorff and Scalmanini, Consulting Engineers, April 2010.
2009 Annual Report of Hydrogeologic Conditions, Water Requirements, Supplies, and Disposition, prepared for Superior Court of California, County of Santa Clara, and Twitchell Management Authority.

Luhdorff and Scalmanini, Consulting Engineers, April 2011.
2010 Annual Report of Hydrogeologic Conditions, Water Requirements, Supplies, and Disposition, prepared for Superior Court of California, County of Santa Clara, and Twitchell Management Authority.

NMMA Technical Group, April 2009.
Nipomo Mesa Management Area First Annual Report, Calendar Year 2008, prepared for Superior Court of California, County of Santa Clara.

NMMA Technical Group, April 2010.
Nipomo Mesa Management Area Second Annual Report, Calendar Year 2009, **DRAFT**, prepared for Superior Court of California, County of Santa Clara.

NMMA Technical Group, April 2011.
Nipomo Mesa Management Area Third Annual Report, Calendar Year 2010, **DRAFT**, prepared for Superior Court of California, County of Santa Clara.

Santa Barbara County Agricultural Commissioner's Office, 2006 - 2011.
Shapefile of cropland boundaries in Santa Barbara County for years 2006-2011. Published and accessed 2011.
http://www.countyofsb.org/itd/gis/default.aspx?id=2802

Santa Barbara County Water Agency, 1994.
Santa Maria Valley Water Resources Report.

Santa Barbara County Water Agency, 1996.
Santa Barbara County 1996 Ground-Water Resources Report.

San Luis Obispo County Agricultural Commissioner's Office, 2005 - 2011.
Shapefile of cropland boundaries in San Luis County for 2005-2011.

Published and accessed 2011.
http://lib.calpoly.edu/collections/gis/slodatafinder/

SMVWCD, 1968-2011.
Reports of monthly Twitchell Reservoir conditions.

Stillwater Sciences, April 2012
Santa Maria River Instream Flow Study: Flow Recommendations for Steelhead Passage, Final Report. Prepared for California Ocean Protection Council and California Department of Fish and Game.

Superior Court of the State of California, County of Santa Clara, June 30, 2005.
Stipulation in the Santa Maria Groundwater Litigation, Lead Case No. CV 770214.

Sweet, R., City of Santa Maria, May 11, 2012. Personal communication.

Toups Corporation, July 1976.
Santa Maria Valley Water Resources Study, prepared for City of Santa Maria.

UCCE, 1994.
Using Reference Evapotranspiration (ETo) and Crop Coefficients to Estimate Crop Evapotranspiration (ETc) for Agronomic Crops, Grasses, and Vegetable Crops, Leaflet 21427.

USGS, Worts, G.F., Jr., 1951.
Geology and Ground-Water Resources of the Santa Maria Valley Area, California, USGS WSP 1000.

USGS, Thomasson, H.G., Jr., 1951.
Surface Water Resources, in **Geology and Ground-Water Resources of the Santa Maria Valley Area, California**, USGS WSP 1000.

USGS, Miller, G.A., and Evenson, R.E., 1966.
Utilization of Groundwater in the Santa Maria Valley Area, California, USGS WSP 1819-A.

USGS, Hughes, J.L., 1977.
Evaluation of Ground-Water Quality in the Santa Maria Valley, California, USGS WRI Report 76-128.

Appendix A

SMVMA Monitoring Program

Monitoring Program for the Santa Maria Valley Management Area

prepared for

Superior Court of California, County of Santa Clara
and
Twitchell Management Authority

Luhdorff and Scalmanini
Consulting Engineers

October 2008
(revised April 2011)

Table of Contents

Page No.

I. INTRODUCTION **1**

II. MONITORING PROGRAM **2**

2.1 Hydrologic Data 4
2.1.1 Groundwater Levels and Quality 4
Well Networks 4
Monitoring Specifications 6
Monitoring Frequency 7
Data Sources, Agency Coordination, and Plan Implementation 7
2.1.2 Surface Water Storage, Discharge, Stage, and Quality 8
Monitoring Locations 8
Monitoring Specifications 10
Monitoring Frequency 10
Data Sources, Agency Coordination, and Plan Implementation 10
2.1.3 Precipitation and Reference Evapotranspiration (ETo) 11
Monitoring Locations 11
Monitoring Specifications and Frequency 12
Data Sources, Agency Coordination, and Plan Implementation 12

2.2 Water Requirements and Supply Data 12
2.2.1 Agricultural Land Use and Water Requirements 12
2.2.2 Municipal Water Requirements 13
2.2.3 Groundwater Pumping 13
2.2.4 Imported Water 13

2.3 Water Disposition Data 13
2.3.1 Treated Water Discharge 14
2.3.2 Exported Water 14
2.3.3 Agricultural Drainage and Return Flows 14

III. SUMMARY **15**

List of Figures and Tables

Figure 1 Santa Maria Valley Groundwater Basin and Management Areas
Figure 2a Well Network for Monitoring Shallow Groundwater
Figure 2b Well Network for Monitoring Deep Groundwater
Figure 3 Surface Water and Climatic Monitoring Network

Table 1a Well Network for Monitoring Shallow Groundwater
Table 1b Well Network for Monitoring Deep Groundwater
Table 1c Unclassified Wells for Groundwater Monitoring

I. INTRODUCTION

The terms and conditions of a Stipulation in the Santa Maria Valley Groundwater Basin Litigation passed down by the Superior Court of the State of California, County of Santa Clara, on June 30, 2005, are intended to "impose a physical solution establishing a legal and practical means for ensuring the Basin's long-term sustainability." Under the Stipulation, the groundwater, imported and developed water, and storage space of the Basin are to be managed in three management areas, including one for the Santa Maria Valley (SMVMA) (Figure 1). The management area is approximately 175 square miles in size encompassing the Santa Maria and Sisquoc Valleys, extending north to the Nipomo Mesa, east to the cliffs above the Santa Maria River and terraces along the Sisquoc River, south to the Casmalia and Solomon Hills, and west to the coast.

According to the Stipulation, a monitoring program is to be established for each of the three management areas to collect and analyze data regarding water supply and demand such that the following objectives are met:

1) assessment of groundwater conditions, both levels and quality;
2) determination of land use, water requirements, and water supply; and
3) accounting of amounts and methods of disposition of water utilized.

This monitoring program has been prepared to meet these objectives in the SMVMA. Also in accordance with the Stipulation, it is expected that the monitoring results will be utilized for preparation of annual reports on the SMVMA, including an assessment of whether conditions of severe water shortage are present. The monitoring program for the SMVMA, with minor revisions from October 2008, is described by individual element in the following section.

Among other components, the monitoring program includes networks of historically monitored wells, stream gauges, and climatic stations. These monitoring points were selected based on publicly available information about their locations, characteristics, and historical data records with the intent of continuing those records as much as possible. It is recognized that, as implementation of the program proceeds, the inclusion of some network wells may be determined to be impractical or impossible due to problems of access or abandonment. Further, the reestablishment of inactive (or installation of new) wells, stream gauges and climatic stations will depend on interagency coordination, permitting procedures, and budgetary constraints. Thus, it is anticipated that the overall monitoring program will be incrementally implemented as practicalities like those mentioned above dictate. Similarly, it is expected that, with time, the program will undergo modification in response to various factors (e.g. replacing network wells abandoned in the future, revising well classifications by aquifer depth zone), while maintaining the overall goal of facilitating interpretation and reporting on water requirements, water supplies, and the state of groundwater conditions in the SMVMA.

II. MONITORING PROGRAM

As a basis for designing the monitoring program, all pertinent historical data on the geology and water resources of the SMVMA were updated and compiled into a Geographic Information System (GIS). The data include the following:

- well location, reference point elevation (RPE), depth, and construction information;
- surface water gauge locations and characteristics;
- precipitation gauge and climate station locations and characteristics;
- groundwater levels and quality;
- Twitchell Reservoir releases, stream discharge and quality;
- precipitation and reference evapotranspiration (ETo) records;
- topographic, cultural, soils, and land use maps;
- geologic map and geologic structure contours;
- water purveyor wellfield areas;
- wastewater treatment plant (WWTP) locations.

The GIS was first utilized to define aquifer depth zones for groundwater monitoring purposes. In the central and major portion of the SMVMA, there is a shallow zone comprised of the Quaternary Alluvium, Orcutt formation, and uppermost Paso Robles formation and a deep zone comprised of the remaining Paso Robles formation and Careaga Sand. In the eastern portion of the SMVMA where these formations are much thinner and comprised of coarser materials, particularly in the Sisquoc Valley, the aquifer system is essentially uniform without distinct aquifer depth zones. In the coastal area where the surficial deposits (upper members of Quaternary Alluvium and Orcutt formation) are extremely fine-grained, the underlying formations (lower members of Quaternary Alluvium and Orcutt formation, Paso Robles formation, and Careaga Sand) comprise a confined aquifer.

The GIS was then used to classify a majority of wells into the shallow or deep aquifer zones based on well depth and completion information, although a number of wells could not be classified because this information is either unavailable or indicates completion across both the shallow and deep zones. An evaluation was made of the distribution of wells across the SMVMA completed in each depth zone. Wells actively or historically monitored for water levels and quality by the U.S. Geological Survey (USGS) and its cooperating local agencies[1] (Agencies) were identified, and an evaluation was made of the adequacy of coverage of the SMVMA to meet the objective in the Stipulation of assessing groundwater conditions.

It was determined that the wells actively monitored by the Agencies for groundwater levels provide extensive but somewhat incomplete coverage of the SMVMA, with areas

[1] Cooperating local agencies include Santa Barbara County, San Luis Obispo County, and the Santa Maria Valley Water Conservation District (SMVWCD).

left unmonitored in both aquifer zones. Based on this assessment, the groundwater monitoring program for the SMVMA was designed to first incorporate all of the actively monitored wells (denoted herein as "active wells"). Thus, those wells will continue to be monitored for water levels by the Agencies with the resulting data used toward assessing groundwater conditions in the SMVMA.

Secondly, in order to fill the gaps in coverage around the active wells, the groundwater monitoring program includes a number of additional wells historically monitored by the Agencies that are no longer monitored (denoted herein as "inactive wells", but intended to be actively monitored as part of this program). Thus, water level monitoring in these wells will need to be restarted in collaboration with the Agencies. This will provide the additional benefit of bringing forward the historical water level records of the inactive wells, some of which begin in the 1920s.

Regarding the active and inactive wells, those that could not be classified by aquifer depth zone (noted as "unclassified wells") are nonetheless included in the monitoring program because they contribute to completing well coverage of the SMVMA. The main revision to the October 2008 monitoring program is classification of previously unclassified wells based on additional well information, water level, and water quality data collected since the monitoring program was implemented.

Third, the groundwater monitoring program includes new monitoring wells to be installed in both the shallow and deep aquifer zones in an area north of downtown Santa Maria to fill a gap in coverage by existing wells. Arrangements will need to be made for the well installations, and monitoring will need to be implemented in collaboration with the Agencies.

This groundwater monitoring program designates a subset of wells for the purpose of monitoring groundwater quality, with well selection based on evaluation of well depths, completion information, and historical water level and quality data. It was determined that, of those wells actively monitored for groundwater levels, very few are actively monitored for groundwater quality. The subset of groundwater quality wells under this monitoring program incorporates the few active water quality wells, which will continue to be monitored by the Agencies. In addition, the subset includes wells historically (but no longer) monitored for water quality and wells historically monitored for water levels (but never for water quality) by the Agencies. Thus, water quality monitoring in these wells will need to be restarted or implemented in collaboration with the Agencies. Lastly, in order to fill a gap in coverage by existing wells, the new monitoring well to be installed in the deep aquifer zone north of downtown Santa Maria is included in the subset of groundwater quality wells.

Thus, the groundwater monitoring program designates two well networks, one each for the shallow and deep aquifer zones, primarily comprised of wells that are actively monitored. The networks include additional wells that are currently inactive (monitoring to be restarted) and some new wells (installation and monitoring to be implemented). All

network wells are to be monitored for groundwater levels, with a subset of those wells to be monitored for groundwater quality, as described in detail in the subsection below.

Another use of the GIS was for the evaluation of actively and historically monitored surface water and climatic gauges by their location and period of record, specifically for Twitchell Reservoir releases, stream discharge, precipitation, and reference evapotranspiration (ETo) data, in order to assess adequacy of coverage in the SMVMA to meet monitoring objectives in the Stipulation. In this case, it was determined that the actively monitored gauges provide a substantial but incomplete accounting of surface water resources in the SMVMA, with several streams no longer monitored and the Valley floor without any climatic gauges. The SMVMA monitoring program was designed to incorporate the active gauges and reestablish inactive gauges to provide a comprehensive record of surface water and climatic data. A revision to the October 2008 monitoring program is the addition of a surface water sampling point on Green Canyon drainage, currently monitored for flow and quality.

A description of the groundwater, surface water, and climatic monitoring included in the SMVMA monitoring program is provided in the following subsection. Three monitoring program elements designate the data collection to be conducted across the area including 1) hydrologic data with which groundwater conditions, surface water conditions, and agricultural water requirements may be assessed, 2) water requirements and supply data for agricultural irrigation and municipal use; and 3) water disposition data for agricultural and municipal land uses.

2.1 Hydrologic Data

Hydrologic data include groundwater levels and quality from two well networks, one each for the shallow and deep aquifer zones. Also to be collected are data on Twitchell Reservoir releases and stream stage, discharge, and quality, from a designated set of surface water monitoring locations. The data also include precipitation and ETo data, which will be used to estimate agricultural water use in the SMVMA.

2.1.1 Groundwater Levels and Quality

Well Networks

Evaluation of historical groundwater level and quality data from the SMVMA indicates that groundwater conditions differ across the area and with depth; accordingly and as described above, the groundwater monitoring program designates both shallow and deep well networks. The monitoring networks include along the coast three sets of existing grouped monitoring wells that are completed at varying depths for the purpose of detecting conditions of saltwater intrusion. However, the networks lack coverage inland in an area north of downtown Santa Maria adjacent to the Santa Maria River, necessitating the installation of at least one shallow and one deep well.

The monitoring networks are primarily comprised of wells actively monitored by the USGS and cooperating agencies (Agencies). The networks include additional wells that are currently inactive (monitoring to be restarted) and some new wells (installation and monitoring to be implemented). The shallow well network consists of 68 wells for groundwater level monitoring with a subset of 37 wells for water quality monitoring (Table 1a and Figure 2a), including one new well to be installed north of Santa Maria and monitored for shallow groundwater levels. The deep well network consists of 52 wells for water level monitoring with a subset of 38 water quality wells (Table 1b and Figure 2b), including one new well to be monitored for groundwater levels and quality in the deep zone. In addition, 29 unclassified wells are included for groundwater level monitoring with a subset of 4 water quality wells (Table 1c); they are shown on both the shallow and deep well network maps (see Figures 2a/2b) to illustrate the areal distribution of network wells across the SMVMA.

To augment the monitoring program results, data from water supply well monitoring conducted by the Cities of Santa Maria and Guadalupe and by the Golden State Water Company to meet California Dept. of Health Services requirements will be compiled. Likewise, data from sanitation facility well monitoring conducted under their respective permit conditions will augment the monitoring program results. Finally, data collected from wells in the Nipomo Mesa Management Area (NMMA) monitoring program (not part of the SMVMA well networks) will be compiled in order to assess groundwater conditions in the area along the northern boundary of the SMVMA.

Overall, the groundwater monitoring networks for the SMVMA include:

- 149 wells for water levels (68 shallow, 52 deep, 29 unclassified), of which:

- 91 of the 149 wells are active (42 shallow, 28 deep, 21 unclassified) and will continue to be monitored for water levels by the Agencies,
- 56 wells are inactive (25 shallow, 23 deep, 8 unclassified) and will need to have water level monitoring restarted in collaboration with the Agencies,
- 2 wells are new (1 shallow and 1 deep) and will need to have arrangements made for their installation and water level monitoring implemented in collaboration with the Agencies, and

- 79 of the 149 wells are also for water quality (37 shallow, 38 deep, 4 unclassified), of which:
- 14 wells are active (4 shallow, 9 deep, 1 unclassified), and will continue to be monitored for water quality by the Agencies,
- 34 wells are inactive (17 shallow, 14 deep, 3 unclassified), and will need to have water quality monitoring restarted in collaboration with the Agencies,
- 30 wells not monitored (16 shallow, 14 deep), and will need to have water quality monitoring implemented in collaboration with the Agencies,
- 1 well is new (deep) and will need to have water quality monitoring implemented in collaboration with the Agencies.

The areal coverage of wells for groundwater levels and quality is comparable to previous groundwater resources investigations periodically conducted by the USGS. The groundwater monitoring networks are comprehensive and conservative in that they provide areal coverage of the SMVMA in two depth zones, including focused monitoring for potential saltwater intrusion along the coast. Upon implementation of the groundwater monitoring program and analysis of the initial groundwater level and quality results, an assessment will be made of whether the well network requires modification, e.g., more or less wells, while ensuring the monitoring objectives of the Stipulation are met.

Monitoring Specifications

Under the monitoring program, groundwater level measurements in each network well will be made from an established wellhead reference point to an accuracy of 0.01 foot. Groundwater quality monitoring will include general mineral constituents to facilitate description of the general groundwater chemistry throughout the SMVMA. In addition, specific inorganic constituents are included to assess effects of historical and current land uses and groundwater quality relative to potential saltwater intrusion along the coast. The initial monitoring constituents for both the shallow and deep well networks are:

General Minerals *(including Total Dissolved Solids (TDS), Electrical Conductivity (EC), pH, sodium (Na), calcium (Ca), magnesium (Mg), potassium (K), chloride (Cl), sulfate (SO4), and bicarbonate (HCO3)*
Nitrate as Nitrate *(NO3-NO3)*
Bromide *(Br)*

All sample collection, preservation, and transport will be according to accepted EPA protocol. Sample analyses are to be conducted by laboratories certified by the State of California utilizing standard EPA methodologies. Analyses for NO3-NO3 and Br are to achieve minimum reporting limits of 0.10 mg/l.

The great majority of existing wells in the SMVMA have reported reference point elevations (RPEs) that appear to have been derived from USGS 7-1/2' topographic quadrangles, with variable levels of accuracy. Therefore, a wellhead survey will need to be conducted establishing the RPE for each network well to an accuracy of less than one foot, preferably to 0.01 foot, in order to allow accurate assessment of groundwater conditions throughout the SMVMA. The wellhead survey would most easily be completed using survey-grade global positioning system (GPS) equipment. Upon evaluation of the initial monitoring results, an assessment will be made regarding the need to verify RPEs or modify the set of water quality constituents and/or reporting limits.

Monitoring Frequency

Historical groundwater level data from the SMVMA indicate that water levels typically peak between January and April and decline to the seasonal low between July and October. Accordingly, the initial frequency of groundwater level monitoring is semiannually during the spring and fall, as has typically been the practice of the USGS and some cooperating agencies.

Review of historical groundwater quality data indicates that some quality constituents, such as sulfate, nitrate, and associated TDS and EC values, can change substantially over two to three years. As a result, the initial frequency of groundwater quality sampling is every two years, and preferably during the summer to allow any necessary followup sampling. Coastal monitoring wells will be sampled twice annually, during spring and fall, to evaluate seasonal water quality changes with the seasonal fluctuation in Valley groundwater levels.

The annual groundwater level and quality monitoring results from purveyors and sanitation facility wells will be compiled with the results from the SMVMA monitoring program, at which time an assessment will be made regarding the need for additional monitoring of selected purveyor/facility wells. Regarding the SMVMA well network, following evaluation of the initial groundwater level and quality results, an assessment will be made whether monitoring frequencies need to be modified.

Data Sources, Agency Coordination, and Plan Implementation

Implementation of the groundwater monitoring program will necessitate completing several tasks augmenting the groundwater monitoring currently conducted by the Agencies. It is recommended that program implementation proceed through the following tasks in order:

1) Coordination with the Agencies (primarily the USGS) and landowners to assess site conditions at each designated program well, including field determinations of well and wellhead conditions and access (as needed), with the objective of establishing final well networks (shallow and deep) for the ongoing measurement of water levels and collection of water quality samples;

2) Installation of monitoring wells in those areas lacking coverage by the established networks;

3) Coordination with the Agencies and landowners to make arrangements for conducting groundwater level and quality monitoring, per the monitoring program, on an ongoing basis; and

4) Completion of a wellhead survey to record the reference point elevation and ground surface elevation at each network well.

On an annual basis, the designated groundwater monitoring activities for the SMVMA will need to be coordinated with the USGS and cooperating agencies to confirm their continued monitoring of network wells. During each year, groundwater level and quality data from the Agencies will be compiled with the SMVMA dataset, and an assessment will be made of the remaining data needs to fulfill the groundwater monitoring program. The annual agency coordination, planning of monitoring activities, data collection, and data compilation will be jointly conducted by LSCE and the TMA.

2.1.2 Surface Water Storage, Discharge, Stage, and Quality

Monitoring Locations

Twitchell Reservoir stage, storage, and surface water releases are recorded on a daily basis. Also, four stream gauges in the SMVMA currently provide average daily discharge data, specifically two on the Sisquoc River ("near Sisquoc" and "near Garey"), one on the Santa Maria River ("at Suey Crossing near Santa Maria"), and one on Orcutt Creek ("near Orcutt"). Together, the reservoir release data and current stream gauge measurements account for the primary components of streamflow into the Santa Maria Valley (Figure 3).

Additional data are needed for the main streams associated with the Santa Maria Valley for the purpose of assessing surface water resources and stream/aquifer interactions in the SMVMA. The main component of streamflow into the Santa Maria Valley is not measured, specifically from the Cuyama River (inactive gauge), and streamflow from the Santa Maria Valley cannot be accounted because the gauge located on the Santa Maria River at Guadalupe is inactive. Further, for all streams in the SMVMA, stage measurements are not reported and water quality monitoring is limited to the Sisquoc River ("near Sisquoc") and Orcutt Creek ("near Orcutt"). A sampling point on Green Canyon provides information on the flow and quality of drainage in the western Valley.

Accordingly, the surface water monitoring program specifies that reservoir stage, storage, and releases from the Twitchell Project continue to be recorded on a daily basis. The program also designates a set of stream gauges on the Sisquoc, Cuyama, and Santa Maria Rivers and Orcutt Creek for the determination of average daily stage and discharge (see Figure 3). Gauge locations will serve as water quality sampling points. Additional water quality sampling points (without gauge) are the current Green Canyon point and a new one to be located on Oso Flaco Creek.

The main surface water monitoring locations for the SMVMA include:

- Twitchell Project, which will continue to be monitored for reservoir stage, storage, and releases (with water quality monitoring to be implemented) by the SMVWCD;

- 6 stream gauges, of which:
  2 gauges will continue to be monitored for stream discharge and quality by the USGS:

"Sisquoc River near Sisquoc"
"Orcutt Creek near Orcutt"

2 gauges will continue to be monitored for stream discharge by the USGS (with water quality monitoring to be implemented in collaboration with the USGS):

"Sisquoc River near Garey"
"Santa Maria River at Suey Crossing near Santa Maria"

2 gauges for which stream discharge and water quality monitoring will need to be reestablished in collaboration with the USGS:

"Cuyama River below Twitchell"
"Santa Maria River at Guadalupe"; and

- Green Canyon, for which flow and quality monitoring will continue, and Oso Flaco Creek, for which water quality monitoring will need to be implemented in collaboration with the USGS.

The inactive gauges on the Cuyama River ("below Twitchell) and Santa Maria River ("at Guadalupe") need to be reestablished, and rating curves relating stage measurements to discharge need to be redeveloped. If possible, it would be preferable to establish an alternate location for the Cuyama River gauge closer to its confluence with the Sisquoc River. At the present time, streamflow entering the Santa Maria Valley from the Cuyama River can be estimated from Twitchell Project release data (streamflow losses occur on the Cuyama River between Twitchell Dam and its confluence with the Sisquoc River). Streamflow data from the former Cuyama River gauge facilitated better estimation of streamflow entering the Valley but did not preclude estimation errors.

Operation of the Santa Maria River gauge at Suey Crossing, located in the primary recharge area of the River, will need evaluation. Currently, stream discharge data are reported only sporadically; it appears that stage data have been collected but not yet converted to discharge pending development by the USGS of appropriate rating curves. However, data collection may be being compromised by technical problems with the gauge, in which case timely resolution of the problems or consideration of an alternate gauge location in this reach of the River would be necessary.

It should be noted that, in order to provide for the most complete assessment of surface water resources of the SMVMA, data would also be needed for its tributary streams. Streamflows into the Sisquoc Valley from La Brea Ck, Tepusquet Ck, and Foxen Canyon cannot be accounted because their respective gauges are inactive. Also, streamflows into the Santa Maria Valley from Nipomo and Suey Creeks have not been monitored (see Figure 3). Thus, stream gauges for the determination of average daily stage and discharge would need to be reestablished for La Brea, Tepusquet, and Foxen Canyon Creeks and installed on Nipomo and Suey Creeks in collaboration with the USGS.

To augment the surface water monitoring program results, water quality data from stream studies periodically conducted by the Central Coast Regional Water Quality Control Board and from sanitation facility monitoring will be compiled.

Monitoring Specifications

For the Twitchell Project, reservoir stage will need to be related to storage volume. For all stream gauges, stage measurements will need to be reported relative to some known elevation datum. Under the monitoring program, initial surface water quality analyses to be performed are for the same general mineral and specific inorganic constituents as for groundwater. Reservoir and stream sample collection will be according to accepted protocol; sample preservation, transport, analyses, and reporting limits will be according to groundwater quality monitoring specifications.

Monitoring Frequency

For the Twitchell Project, daily releases and reservoir stage are to be recorded. For all streams, gauge operations will provide average daily stream stage and discharge data. Water quality monitoring will be conducted on a semi-annual basis during the period of maximum winter/spring runoff and minimum summer flows to evaluate changes in surface water quality with fluctuations in stream discharge.

Data Sources, Agency Coordination, and Plan Implementation

Implementation of the surface water monitoring program will necessitate completing several tasks augmenting the stream monitoring currently conducted by the USGS. It is recommended that program implementation proceed through the following tasks in order:

1) Coordination with the USGS to assess site suitability for stream gauges on the Cuyama River ("below Twitchell") and Santa Maria River ("at Guadalupe"), with the objective of establishing the locations and specifications for gauge installation to conduct ongoing measurement of stream stage, discharge, and quality;

2) Coordination with the USGS to install stream gauges and develop rating curves for the Cuyama River ("below Twitchell") and Santa Maria River ("at Guadalupe") locations;

3) Coordination with the Agencies to make arrangements for conducting surface water monitoring, per the monitoring program, on an ongoing basis on the designated streams (USGS) and Twitchell Reservoir (SMVWCD);

4) Coordination with the USGS to assess site suitability for stream gauges on the tributaries La Brea, Tepusquet, Foxen Canyon, Suey, and Nipomo Creeks, with the objective of establishing the locations and specifications for gauge installation to conduct ongoing measurement of stream stage, discharge, and quality;

5) Coordination with the USGS to install stream gauges and develop rating curves for the La Brea, Tepusquet, Foxen Canyon, Suey, and Nipomo Creeks locations; and

6) Coordination with the Agencies to make arrangements for conducting surface water monitoring, per the monitoring program, on an ongoing basis on the designated streams and tributaries (USGS) and Twitchell Reservoir (SMVWCD).

On an annual basis, the designated surface water monitoring activities for the SMVMA will need to be coordinated with the USGS to confirm their continued operation of each monitoring program gauge. During each year, Twitchell Project data from the SMVWCD will be compiled with stream stage, discharge, and water quality data from the USGS. Annual agency coordination, planning of monitoring activities, data collection, and data compilation will be jointly conducted by LSCE and the TMA.

2.1.3 Precipitation and Reference Evapotranspiration (ETo)

Monitoring Locations

There currently are three active NCDC[2] precipitation gauges in the SMVMA providing long-term daily precipitation data through the present, specifically at Guadalupe, the Santa Maria airport (formerly downtown), and Garey. In addition, daily precipitation is recorded at four locations around the SMVMA, at the Twitchell Dam (by the SMVWCD) and three active CIMIS[3] climate stations on the Santa Maria Valley floor, near Sisquoc, and on the southern Nipomo Mesa. Daily ETo data are also currently recorded by these three CIMIS climate stations (see Figure 3).

Accordingly, the monitoring program designates the set of four active precipitation gauges (NCDC and Twitchell) and three active CIMIS climate stations for the determination of daily precipitation and ETo (see Figure 3).

The climatic monitoring stations include:

- Four precipitation gauges, which will continue to be monitored by current operators:
  Twitchell Dam (SMVWCD)
  Guadalupe (NCDC)
  Santa Maria Airport (NCDC)
  Garey (NCDC)

- Three climate stations for precipitation and ETo, which will continue to be monitored by California DWR:
  'Santa Maria II'
  'Sisquoc'
  'Nipomo'

[2] NCDC: National Climatic Data Center, administered by the National Oceanic and Atmospheric Administration (NOAA).
[3] CIMIS: California Irrigation Management Information System, administered by California Department of Water Resources (California DWR).

Monitoring Specifications and Frequency

Precipitation gauges will continue to collect total daily precipitation data, and climate stations will report daily ETo values. Operation of the climate stations will be according to CIMIS standards to collect all data utilized in the calculation of ETo values (e.g., air temperature, relative humidity, air speed).

Data Sources, Agency Coordination, and Plan Implementation

On an annual basis, the designated climatic monitoring activities for the SMVMA will need to be coordinated with the NCDC, California DWR, and SMVWCD to confirm their continued operation of each gauge/station. The annual coordination with these agencies and data compilation will be jointly conducted by LSCE and the TMA.

2.2 Water Requirements and Supply Data

These data include agricultural land use derived from land use surveys as input to the estimation of applied agricultural water requirements and, thus, groundwater pumping (sole supply) in the SMVMA. Data also include municipal and private purveyor records of water supplies, which include groundwater and imported water that in total equal the municipal water requirements in the SMVMA.

2.2.1 Agricultural Land Use and Water Requirements

Under the monitoring program, land use surveys of the SMVMA will be conducted on an annual basis from analysis and field verification of aerial photography. In the event that aerial photographs of the SMVMA are unavailable from existing agricultural service companies, arrangements for the aerial photography work will need to be made.

Survey results will be utilized to determine crop distribution and acreages, which in turn will be used in conjunction with standard crop coefficient values, ETo and precipitation data, and Valley-specific irrigation efficiency values to estimate annual applied agricultural water requirements. With groundwater serving as the sole source of water supply for agricultural irrigation in the SMVMA, the estimated applied agricultural water requirements will be considered equal to the agricultural groundwater pumping in the SMVMA.

Aerial photography arrangements and analysis, field verification, determination of crop distribution and acreages, and estimation of agricultural water requirements will be jointly conducted by LSCE and the TMA.

2.2.2 Municipal Water Requirements

As part of the monitoring program, records will be compiled of groundwater pumping and imported water deliveries from the State Water Project, Central Coast Authority (SWP), to municipal and private water purveyors, including the Cities of Santa Maria and Guadalupe, and the Golden State Water Company. All data will be recorded by subsystem on a monthly basis; groundwater pumping will be by individual water supply well; and all water transfers within the SMVMA between purveyors are to be noted. Also included are data on the number of service connections, any estimates of water usage on a per capita or per connection basis, and historical and current projections of water demand.

During the first year, purveyors will also provide current service area boundaries and all available water supply well location, depth, and completion information. With groundwater pumping and imported water deliveries as the two sources of water supply for municipal water use in the SMVMA, their total will be considered equal to the municipal water requirements in the SMVMA.

During each year, water supply data from the purveyors will be compiled into the SMVMA dataset. Annual coordination with purveyors will be jointly conducted by LSCE and the TMA.

2.2.3 Groundwater Pumping

The estimated groundwater pumping for agricultural irrigation will be summed with the reported pumping for municipal use in order to calculate total annual groundwater pumping in the SMVMA.

2.2.4 Imported Water

Imported water data will be obtained to summarize SWP deliveries to municipal and private water purveyors, specifically the Cities of Santa Maria and Guadalupe and the Golden State Water Company. Those data will be summed to calculate total annual imported water supplies in the SMVMA.

2.3 Water Disposition Data

In order to provide an accounting of amounts and methods of disposition of water utilized in the SMVMA, several data are to be reported. These include treated water volumes processed and disposed at wastewater treatment plants (WWTPs); records of any water exported from the SMVMA; and estimates of agricultural drainage disposed outside the SMVMA. “Disposition” of applied irrigation not consumptively used by crops, e.g., return flows to the aquifer system, will also be accounted.

2.3.1 Treated Water Discharge

Under the monitoring program, records of influent and treated effluent volumes will be compiled for WWTPs, including the Cities of Santa Maria, Guadalupe, and Laguna Sanitation District. All data will initially be recorded on a monthly basis to assess seasonal variation in the disposition of water (e.g., percentage of water utilized that becomes WWTP influent; losses during treatment). Effluent volumes will be recorded by disposal method and location, including any reuse of recycled water.

These data will be utilized to provide an accounting of municipal water disposed in the SMVMA. During each year, water disposal data from the WWTPs will be compiled into the SMVMA dataset. Annual coordination with the WWTPs will be jointly conducted by LSCE and the TMA.

2.3.2 Exported Water

As part of the monitoring program, records will be compiled of any groundwater or imported (SWP) water that is exported from the SMVMA. All data will be recorded by subsystem on a monthly basis and the receiving entities are to be noted. During each year, the data acquisition and compilation into the SMVMA dataset will be jointly conducted by LSCE and the TMA.

2.3.3 Agricultural Drainage and Return Flows

Under the monitoring program, estimation will be made of water drained from agricultural fields (e.g., by tile drains) for disposal outside of the SMVMA. Finally, while not formally “monitored,” the disposition of applied irrigation will include estimates of the fate of that fraction of water not consumptively used by crops, primarily as return flow to the aquifer system.

III. SUMMARY

The monitoring program for the SMVMA includes the collection of hydrologic data, including: groundwater levels and quality; surface water storage, stream stage, discharge, and quality; and precipitation and ETo. The program provides designated shallow and deep well networks (Tables 1a/b/c and Figures 2a/b) and a surface water and climatic monitoring network (Figure 3) for collection of these data. Also specified are water requirements and supply data to be compiled for agricultural irrigation and municipal use, the disposal data for municipal water use, data on water exported from the SMVMA, and estimates of agricultural drainage and return flows.

The monitoring program components and frequencies are summarized as follows:

- groundwater levels: 149 wells (68 shallow, 52 deep, 29 unclassified), of which:
  91 wells are actively monitored (with monitoring to continue),
  56 wells are inactive (with monitoring to be reactivated), and
  2 wells are new (with monitoring to be implemented);
  semiannual frequency.

- groundwater quality: subset of 79 wells (37 shallow, 38 deep, 4 unclassified); of which:
  14 wells are actively monitored (with monitoring to continue),
  34 wells are inactive (with monitoring to be reactivated),
  30 wells are unmonitored and
  1 well is new (with monitoring to be implemented;
  analyzed for General Minerals (incl. NO3-NO3) and Bromide;
  biennial frequency.

- Twitchell Reservoir: stage, storage, and releases, which are actively monitored
  (with monitoring to continue), and
  quality, which is unmonitored (with monitoring to be implemented);
  stage, storage, and releases monitored daily;
  quality analyzed for General Minerals (incl. NO3-NO3) and Bromide on a biennial frequency.

- streams: 6 designated gauges for discharge, stage, and quality, of which:
  2 gauges are actively monitored for discharge and quality (to be continued),
  2 gauges are actively monitored for discharge (to be continued) but not monitored for water quality (to be implemented), and
  2 gauges are inactive (discharge and water quality monitoring to be reestablished);
  discharge and stage monitored daily;
  quality analyzed for General Minerals (incl. NO3-NO3) and Bromide on a biennial frequency.

- stream tributaries: 5 potential gauges for daily discharge and stage, that are inactive and would need to be reestablished.

- precipitation: 4 active gauges (to be continued);
  daily frequency.

- ETo: 3 active stations (to be continued);
  daily frequency.

- land use; annually.

- municipal water requirements, supplies (groundwater pumping and SWP imported water), disposal, and exportation; monthly.

- agricultural drainage and return flow; annually.

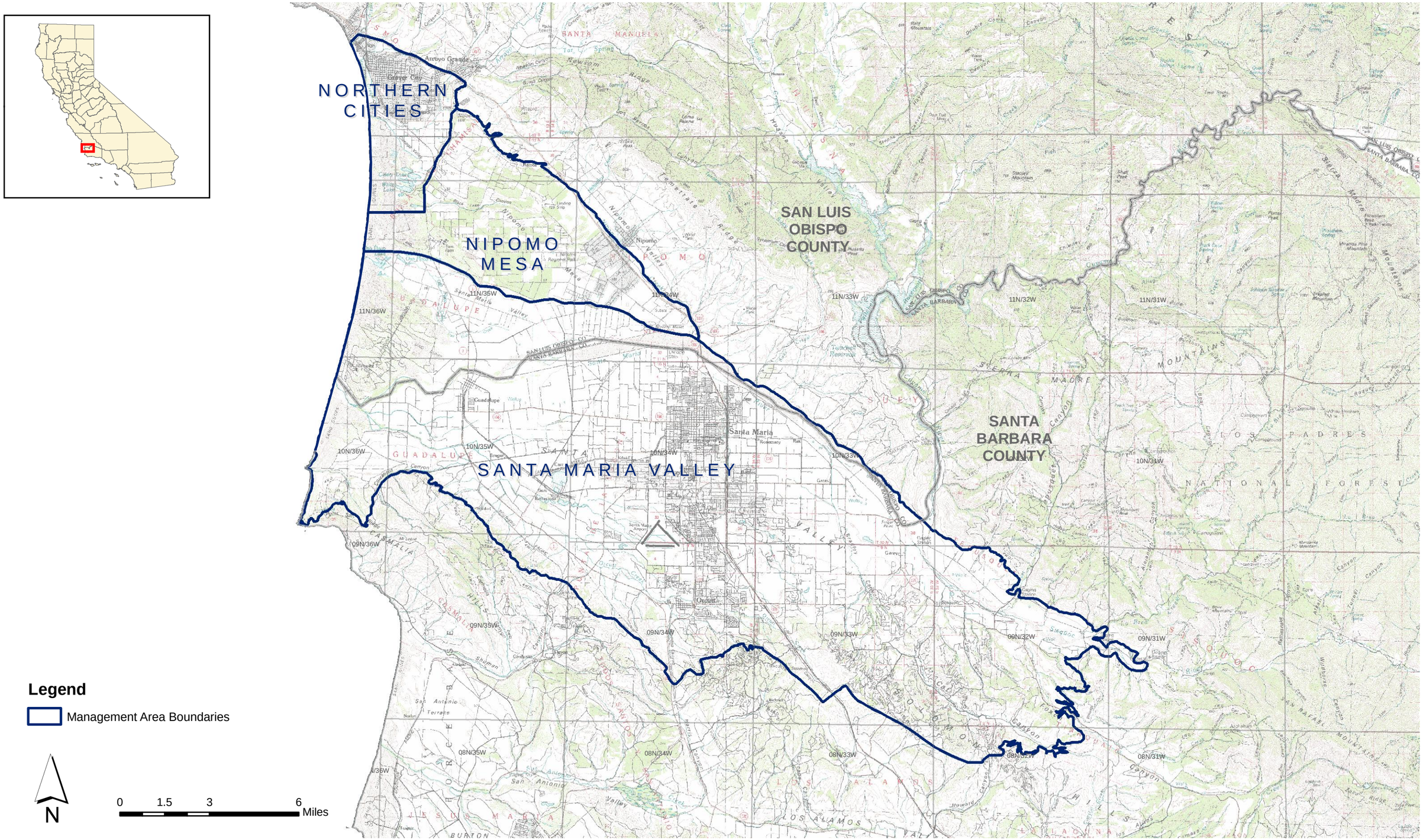

LUHDORFF & SCALMANINI CONSULTING ENGINEERS

Figure 1
Santa Maria Valley Groundwater Basin and Management Areas

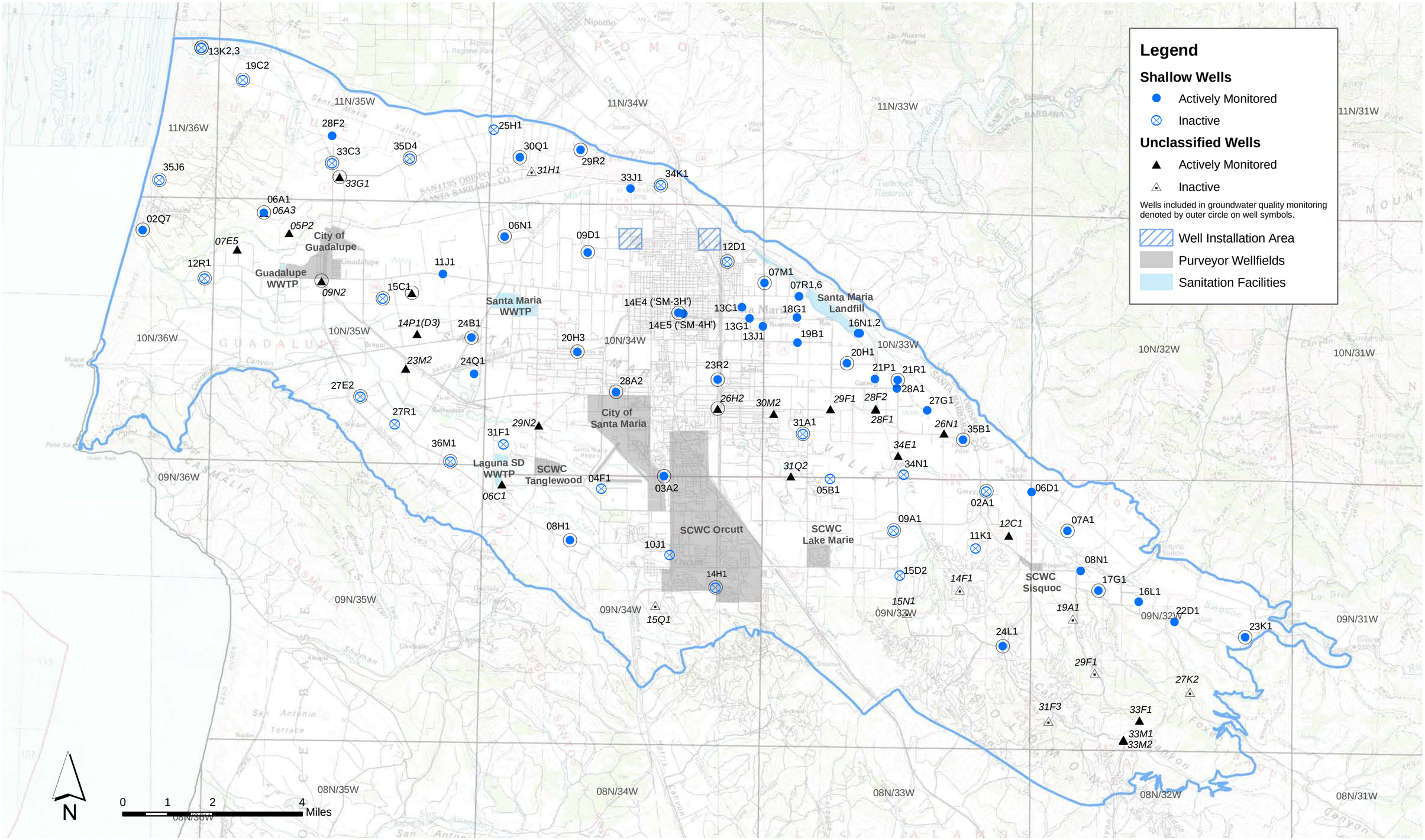

LUHDORFF & SCALMANINI CONSULTING ENGINEERS

Figure 2a
Well Network for Monitoring Shallow Groundwater
Santa Maria Valley Management Area

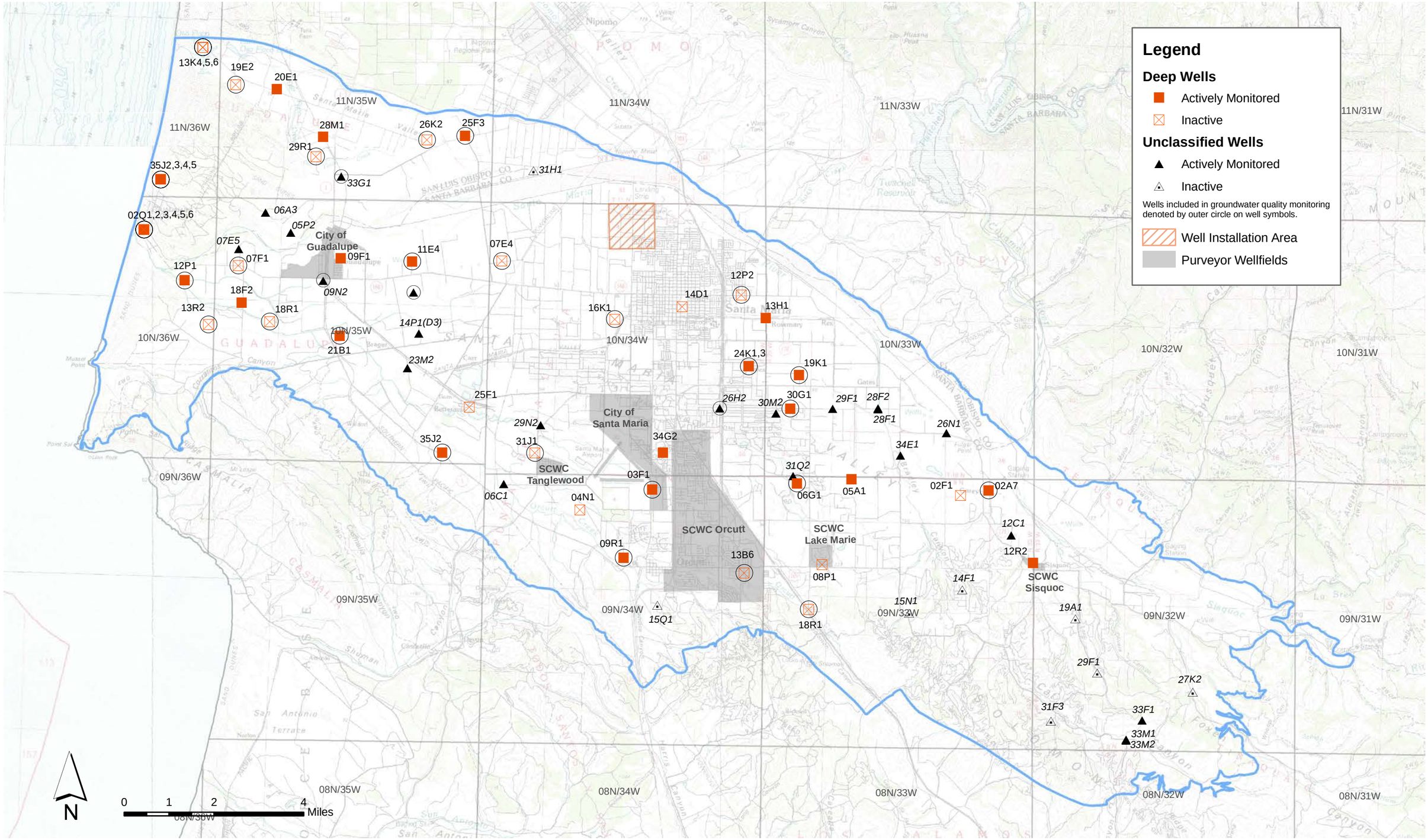

LUHDORFF & SCALMANINI CONSULTING ENGINEERS

Figure 2b
Well Network for Monitoring Deep Groundwater
Santa Maria Valley Management Area

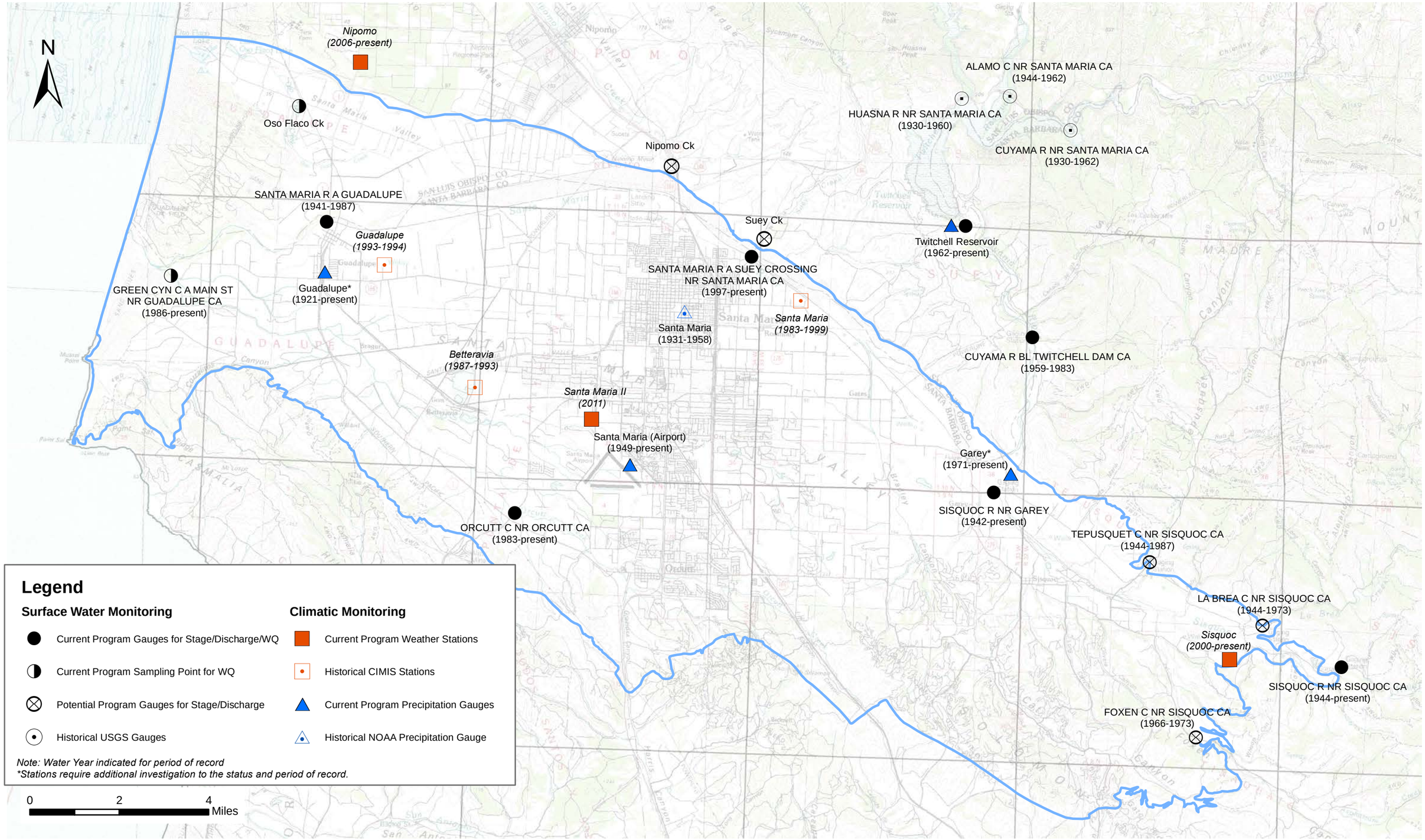

LUHDORFF & SCALMANINI
CONSULTING ENGINEERS

Figure 3
Surface Water and Climatic Monitoring Network
Santa Maria Valley Management Area

Table 1a
Well Network for Monitoring Shallow Groundwater
Santa Maria Valley Management Area
(corresponds to Figure 2a)

Township/ Range	State Well Number	Well Map ID	Monitoring Agency	Actively Monitored for Water Levels	Actively Monitored for Water Quality	To Be Sampled for Water Quality
SHALLOW WELLS						
9N/32W	009N032W06D001S	06D1	USGS	A/S		
	009N032W07A001S	07A1	USGS	A/S		B
	009N032W08N001S	08N1	USGS	A/S		
	009N032W16L001S	16L1	USGS	A/S		
	009N032W17G001S	17G1	USGS	A/S		B
	009N032W22D001S	22D1	USGS	A/S		
	009N032W23K001S	23K1	USGS	A/S		B
9N/33W	009N033W02A001S	02A1	TBD			B
	009N033W05B001S	05B1	TBD			
	009N033W09A001S	09A1	TBD			B
	009N033W11K001S	11K1	TBD			
	009N033W15D002S	15D2	TBD			
	009N033W24L001S	24L1	USGS	A/S		B
9N/34W	009N034W03A002S	03A2	USGS	A/S	A	B
	009N034W04F001S	04F1	TBD			
	009N034W08H001S	08H1	USGS	A/S		B
	009N034W10J001S	10J1	TBD			
	009N034W14H001S	14H1	TBD			B
10N/33W	010N033W07M001S	07M1	USGS	A/S		B
	010N033W07R001S	07R1	USGS	A/S		
	010N033W07R006S	07R6	USGS	A/S		
	010N033W16N001S	16N1	USGS	A/S		
	010N033W16N002S	16N2	USGS	A/S		
	010N033W18G001S	18G1	SMVWCD & USGS	Qtr & S		
	010N033W19B001S	19B1	SMVWCD & USGS	Qtr & S		
	010N033W20H001S	20H1	USGS	A/S	A	B
	010N033W21P001S	21P1	SMVWCD & USGS	Qtr & S		
	010N033W21R001S	21R1	USGS	A/S		B
	010N033W27G001S	27G1	SMVWCD & USGS	Qtr & S		
	010N033W28A001S	28A1	SMVWCD & USGS	Qtr & S		
	010N033W31A001S	31A1	TBD			B
	010N033W34N001S	34N1	TBD			
	010N033W35B001S	35B1	USGS	A/S		B
10N/34W	010N034W06N001S	06N1	SMVWCD & USGS	Qtr & S		B
	010N034W09D001S	09D1	SMVWCD & USGS	Qtr & S		B
	010N034W12D001S	12D1	TBD			B
	010N034W13C001S	13C1	USGS	A/S		
	010N034W13G001S	13G1	USGS	A/S		
	010N034W13J001S	13J1	USGS	A/S		
	010N034W14E004S	14E4	SMVWCD & USGS	Qtr & S	A	B
	010N034W14E005S	14E5	USGS	A/S		
	010N034W20H003S	20H3	SMVWCD & USGS	Qtr & S		B
	010N034W23R002S	23R2	USGS	A/S		B
	010N034W28A002S	28A2	SMVWCD & USGS	Qtr & S		B
	010N034W31F001S	31F1	TBD			
10N/35W	010N035W06A001S	06A1	USGS	A/S		B
	010N035W11J001S	11J1	SMVWCD & USGS	Qtr & S		
	010N035W15C001S	15C1	TBD			B
	010N035W24B001S	24B1	SMVWCD & USGS	Qtr & S		B
	010N035W24Q001S	24Q1	USGS	A/S		
	010N035W27E002S	27E2	TBD			B
	010N035W27R001S	27R1	TBD			
	010N035W36M001S	36M1	TBD			B

Frequency Abbreviation: A/S - Annual/Semiannual; Qtr & S - Quarter & Semiannual; A - Annual; B - Biennial
Agency Abbreviation: SMVWCD - Santa Maria Valley Water Conservation District; SLODPW - San Luis Obispo Department of Public Works; USGS - United States Geological Survey; TBD - To Be Determined

Table 1a (continued)
Well Network for Monitoring Shallow Groundwater
Santa Maria Valley Management Area
(corresponds to Figure 2a)

Township/ Range	State Well Number	Well Map ID	Monitoring Agency	Actively Monitored for Water Levels	Actively Monitored for Water Quality	To Be Sampled for Water Quality
SHALLOW WELLS						
10N/36W	010N036W02Q007S	02Q7	USGS	A/S	A	B
	010N036W12R001S	12R1	TBD			B
11N/34W	011N034W29R002S	29R2	SLODPW & USGS	A/S		B
	011N034W30Q001S	30Q1	SMVWCD & USGS	Qtr & S		B
	011N034W33J001S	33J1	SMVWCD & USGS	Qtr & S		
	011N034W34K001S	34K1	TBD			B
11N/35W	011N035W19C002S	19C2	TBD			B
	011N035W25H001S	25H1	TBD			
	011N035W28F002S	28F2	SLODPW & USGS	A/S		
	011N035W33C003S	33C3	TBD			B
	011N035W35D004S	35D4	TBD			B
11N/36W	011N036W13K002S	13K2	TBD			B
	011N036W13K003S	13K3	TBD			B
	011N036W35J006S	35J6	TBD			B

Frequency Abbreviation: A/S - Annual/Semiannual; Qtr & S - Quarter & Semiannual; A - Annual; B - Biennial
Agency Abbreviation: SMVWCD - Santa Maria Valley Water Conservation District; SLODPW - San Luis Obispo Department of Public Works; USGS - United States Geological Survey; TBD - To Be Determined

Notes on Network Modification:

09N/32W-6D1 previously unclassified; classified as shallow well (depth unknown; compared to wells of known depth, water levels similar to those from shallow wells)
09N/33W-12R2 removed; classified as deep well
10N/33W-18G1 previously unclassified; classified as shallow well (depth = 422'; compared to wells of known depth, water levels similar to those from shallow wells)
10N/35W-11J1 previously unclassified; classified as shallow well (depth = 215'; compared to wells of known depth, water levels similar to those from shallow wells)
11N/34W-33J1 previously not included; classified as shallow well (depth = 149'; water level data recently made available by the USGS)
11N/35W-28F2 previously not included; classified as shallow well (depth = 48'; water level data recently made available by NMMA Tech Comm.)
11N/36W-35J5 removed; classified as deep well

Table 1b
Well Network for Monitoring Deep Groundwater
Santa Maria Valley Management Area
(corresponds to Figure 2b)

Township/ Range	State Well Number	Well Map ID	Monitoring Agency	Actively Monitored for Water Levels	Actively Monitored for Water Quality	To Be Sampled for Water Quality
DEEP WELLS						
9N/33W	009N033W02A007S	02A7	SMVWCD & USGS	Qtr & S	A	B
	009N033W02F001S	02F1	TBD			
	009N033W05A001S	05A1	USGS	A/S		
	009N033W06G001S	06G1	USGS	A/S		B
	009N033W08P001S	08P1	TBD			
	009N033W12R002S	12R2	SMVWCD & USGS	Qtr & S		
	009N033W18R001S	18R1	TBD			B
9N/34W	009N034W03F001S	03F1	USGS	A/S		B
	009N034W04N001S	04N1	TBD			
	009N034W09R001S	09R1	USGS	A/S		B
	009N034W13B006S	13B6	TBD			B
10N/33W	010N033W19K001S	19K1	USGS	A/S		B
	010N033W30G001S	30G1	SMVWCD & USGS	Qtr & S	A	B
10N/34W	010N034W07E004S	07E4	TBD			B
	010N034W12P002S	12P2	TBD			B
	010N034W13H001S	13H1	USGS	A/S		
	010N034W14D001S	14D1	TBD			
	010N034W16K001S	16K1	TBD			B
	010N034W24K001S	24K1	SMVWCD & USGS	Qtr & S		
	010N034W24K003S	24K3	SMVWCD & USGS	Qtr & S		B
	010N034W31J001S	31J1	TBD			B
	010N034W34G002S	34G2	SMVWCD & USGS	Qtr & S		
10N/35W	010N035W07F001S	07F1	TBD			B
	010N035W09F001S	09F1	USGS	A/S		
	010N035W11E004S	11E4	SMVWCD & USGS	Qtr & S		B
	010N035W18F002S	18F2	USGS	A/S		
	010N035W18R001S	18R1	TBD			B
	010N035W21B001S	21B1	SMVWCD & USGS	Qtr & S		B
	010N035W25F001S	25F1	TBD			
	010N035W35J002S	35J2	USGS	A/S		B
10N/36W	010N036W02Q001S	02Q1	USGS	A/S	A	B
	010N036W02Q002S	02Q2	TBD			B
	010N036W02Q003S	02Q3	USGS	A/S	A	B
	010N036W02Q004S	02Q4	USGS	A/S	A	B
	010N036W02Q005S	02Q5	TBD			B
	010N036W02Q006S	02Q6	TBD			B
	010N036W12P001S	12P1	USGS	A/S		B
	010N036W13R002S	13R2	TBD			B
11N/35W	011N035W19E002S	19E2	TBD			B
	011N035W20E001S	20E1	SMVWCD & USGS	Qtr & S		
	011N035W25F003S	25F3	SMVWCD & USGS	Qtr & S		B
	011N035W26K002S	26K2	TBD			B
	011N035W28M001S	28M1	SMVWCD & USGS	Qtr & S		
	011N035W29R001S	29R1	TBD			B
11N/36W	011N036W13K004S	13K4	TBD			B
	011N036W13K005S	13K5	TBD			B
	011N036W13K006S	13K6	TBD			B
	011N036W35J002S	35J2	USGS	A/S	A	B
	011N036W35J003S	35J3	USGS	A/S	A	B
	011N036W35J004S	35J4	USGS	A/S	A	B
	011N036W35J005S	35J5	USGS	A/S	A	B

Frequency Abbreviation: A/S - Annual/Semiannual; Qtr & S - Quarter & Semiannual; A - Annual; B - Biennial
Agency Abbreviation: SMVWCD - Santa Maria Valley Water Conservation District; USGS - United States Geological Survey; TBD - To Be Determined

Notes on Network Modification:

09N/33W-2A7 previously not included; classified as deep well (depth = 512'; water level data recently made available by the USGS)
09N/33W-12R2 previously classified as shallow well; classified as deep well (depth = 640'; compared to wells of known depth, water levels similar to those from deep wells)
10N/35W-9F1 previously unclassified; classified as deep well (depth = 240'; compared to wells of known depth, water levels similar to those from deep wells)
10N/35W-18F2 previously unclassified; classified as deep well (depth = 251'; compared to wells of known depth, water levels similar to those from deep wells)
10N/35W-21B1 previously unclassified; classified as deep well (depth = 300'; compared to wells of known depth, water levels similar to those from deep wells)
11N/35W-20E1 previously unclassified; classified as deep well (depth = 444'; compared to wells of known depth, water levels similar to those from deep wells)
11N/35W-25F3 previously unclassified; classified as deep well (depth unknown; compared to wells of known depth, water levels similar to those from deep wells)
11N/35W-28M1 previously unclassified; classified as deep well (depth = 376'; compared to wells of known depth, water levels similar to those from deep wells)
11N/36W-35J5 previously classified as shallow well; classified as deep well (depth = 135'; compared to wells of known depth, water levels and quality similar to those from deep coastal network wells)

Table 1c
Unclassified Wells for Groundwater Monitoring
Santa Maria Valley Management Area
(shown on Figures 2a and 2b)

Township/ Range	State Well Number	Well Map ID	Monitoring Agency	Actively Monitored for Water Levels	Actively Monitored for Water Quality	To Be Sampled for Water Quality
UNCLASSIFIED WELLS						
9N/32W	009N032W19A001S	19A1	TBD			
	009N032W27K002S	27K2	TBD			
	009N032W29F001S	29F1	TBD			
	009N032W31F003S	31F3	TBD			
	009N032W33F001S	33F1	USGS	A/S		
	009N032W33M001S	33M1	USGS	A/S		
	009N032W33M002S	33M2	USGS	A/S		
9N/33W	009N033W12C001S	12C1	USGS	A/S		
	009N033W14F001S	14F1	TBD			
	009N033W15N001S	15N1	TBD			
9N/34W	009N034W06C001S	06C1	USGS	A/S		
	009N034W15Q001S	15Q1	TBD			
10N/33W	010N033W26N001S	26N1	USGS	A/S		
	010N033W28F001S	28F1	USGS	A/S		
	010N033W28F002S	28F2	USGS	A/S		
	010N033W29F001S	29F1	USGS	A/S		
	010N033W30M002S	30M2	USGS	A/S		
	010N033W31Q002S	31Q2	USGS	A/S		
	010N033W34E001S	34E1	USGS	A/S		
10N/34W	010N034W26H002S	26H2	USGS	A/S		B
	010N034W29N002S	29N2	USGS	A/S		
10N/35W	010N035W05P002S	05P2	USGS	A/S		
	010N035W06A003S	06A3	USGS	A/S		
	010N035W07E005S	07E5	USGS	A/S		
	010N035W09N002S	09N2	USGS	A/S		B
	010N035W14P001S	14P1 (D3)[1]	USGS	A/S	(A)	(A)
	010N035W23M002S	23M2	USGS	A/S		
11N/34W	011N034W31H001S	31H1	TBD			
11N/35W	011N035W33G001S	33G1	SMVWCD & USGS	Qtr & S		B

[1]14P1 actively monitored for levels but not quality. 14D3 actively monitored for quality but not levels.

Frequency Abbreviation: A/S - Annual/Semiannual; Qtr & S - Quarter & Semiannual; A - Annual; B - Biennial
Agency Abbreviation: SMVWCD - Santa Maria Valley Water Conservation District; USGS - United States Geological Survey; TBD - To Be Determined

Notes on Network Modification:

09N/32W-6D1 removed; classified as shallow well
10N/33W-18G1 removed; classified as shallow well
10N/35W-9F1 removed; classified as deep well
10N/35W-11J1 removed; classified as shallow well
10N/35W-18F2 removed; classified as deep well
10N/35W-21B1 removed; classified as deep well
11N/35W-20E1 removed; classified as deep well
11N/35W-25F3 removed; classified as deep well
11N/35W-28M1 removed; classified as deep well

Appendix B

2011 Land Use
Data and Image Inventory

Appendix B
2011 Landuse Interpretation
Data and Image Inventory
Santa Maria Valley Management Area

Year	Dataset	Data Type and Resolution	Coverage Area	Date	Source
2011	NDVI	L5 Multi-band raster 30m	PR 42/36	January 7, 2011	USGS
	NDVI	L5 Multi-band raster 30m	PR 42/36	January 23, 2011	USGS
	NDVI, CIR Composite	L5 Multi-band raster 30m	PR 42/36	February 8, 2011	USGS
	NDVI	L5 Multi-band raster 30m	PR 42/36	March 28, 2011	USGS
	NDVI	L5 Multi-band raster 30m	PR 42/36	April 29, 2011	USGS
	NDVI	L5 Multi-band raster 30m	PR 42/36	May 31, 2011	USGS
	NDVI, CIR Composite	L5 Multi-band raster 30m	PR 43/36	June 7, 2011	USGS
	NDVI	L7 Multi-band raster 30m	PR 43/36	June 15, 2011	USGS
	NDVI	L5 Multi-band raster 30m	PR 42/36	July 2, 2011	USGS
	NDVI	L5 Multi-band raster 30m	PR 42/36	July 18, 2011	USGS
	NDVI	L5 Multi-band raster 30m	PR 42/36	September 4, 2011	USGS
	NDVI	L5 Multi-band raster 30m	PR 42/36	September 20, 2011	USGS
	NDVI	L5 Multi-band raster 30m	PR 42/36	October 6, 2011	USGS
	NDVI	L5 Multi-band raster 30m	PR 42/36	October 22, 2011	USGS
	NDVI	L5 Multi-band raster 30m	PR 42/36	November 7, 2011	USGS
	NAIP Digital Ortho Mosaic	Color aerial photo 1m	SLO and SB Cty	June 2009	USDA/FSA/APFO
	NAIP Digital Ortho Mosaic	Color aerial photo 1m	SLO and SB Cty	Summer 2010	USDA/FSA/APFO
	SB Cty Pesticide Crop Report	Crop Polygon shp	SB Cty	2011	SB Cty Ag Co
	SLO Cty Pesticide Permitted Crop	Crop Polygon shp	SLO Cty	2011	SLO Cty Ag Co

CIR - Color Infrared; L5 - Landsat 5; L7 - Landsat 7; NAIP - National Ag Imagery Program; NDVI - Normalized Difference Vegetation Index; PR - Path/Row; SB Cty - Santa Barbara County; SB Cty Ag Co - Santa Barbara Agricultural Commission; shp - Shapefile; SLO Cty - San Luis Obispo County; SLO Cty Ag Co - San Luis Obispo County Agriculture Commission; USDA/FSA/APFO - United States Department of Agriculture/Farm Service Agency/Aerial Photography Field Office; USGS - United States Geological Survey

Appendix C

Coastal Groundwater Quality

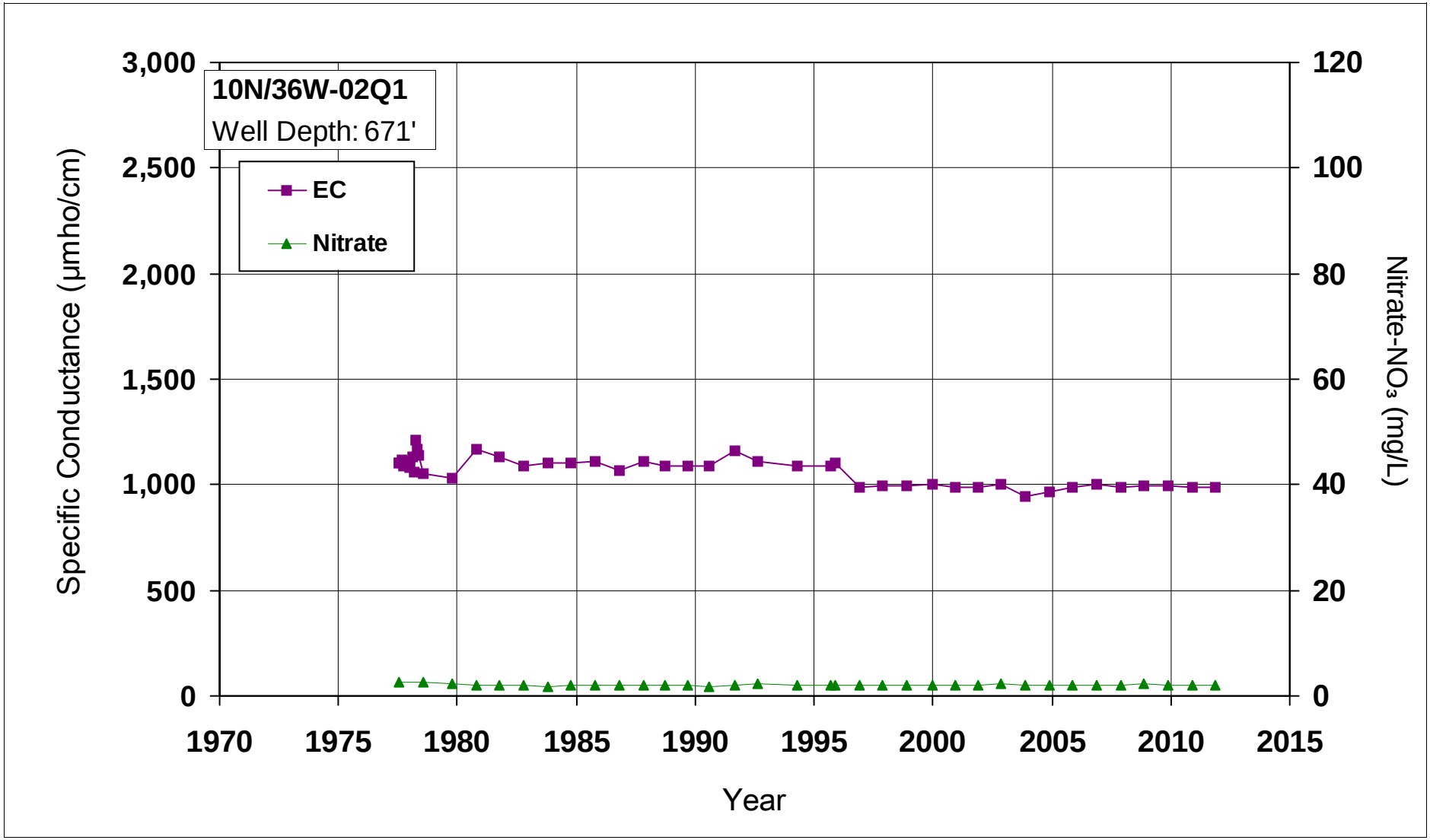
10N/36W-02Q1
Well Depth: 671'
EC
Nitrate
Specific Conductance (µmho/cm)
Nitrate-NO₃ (mg/L)
Year
3,000
2,500
2,000
1,500
1,000
500
0
120
100
80
60
40
20
0
1970
1975
1980
1985
1990
1995
2000
2005
2010
2015

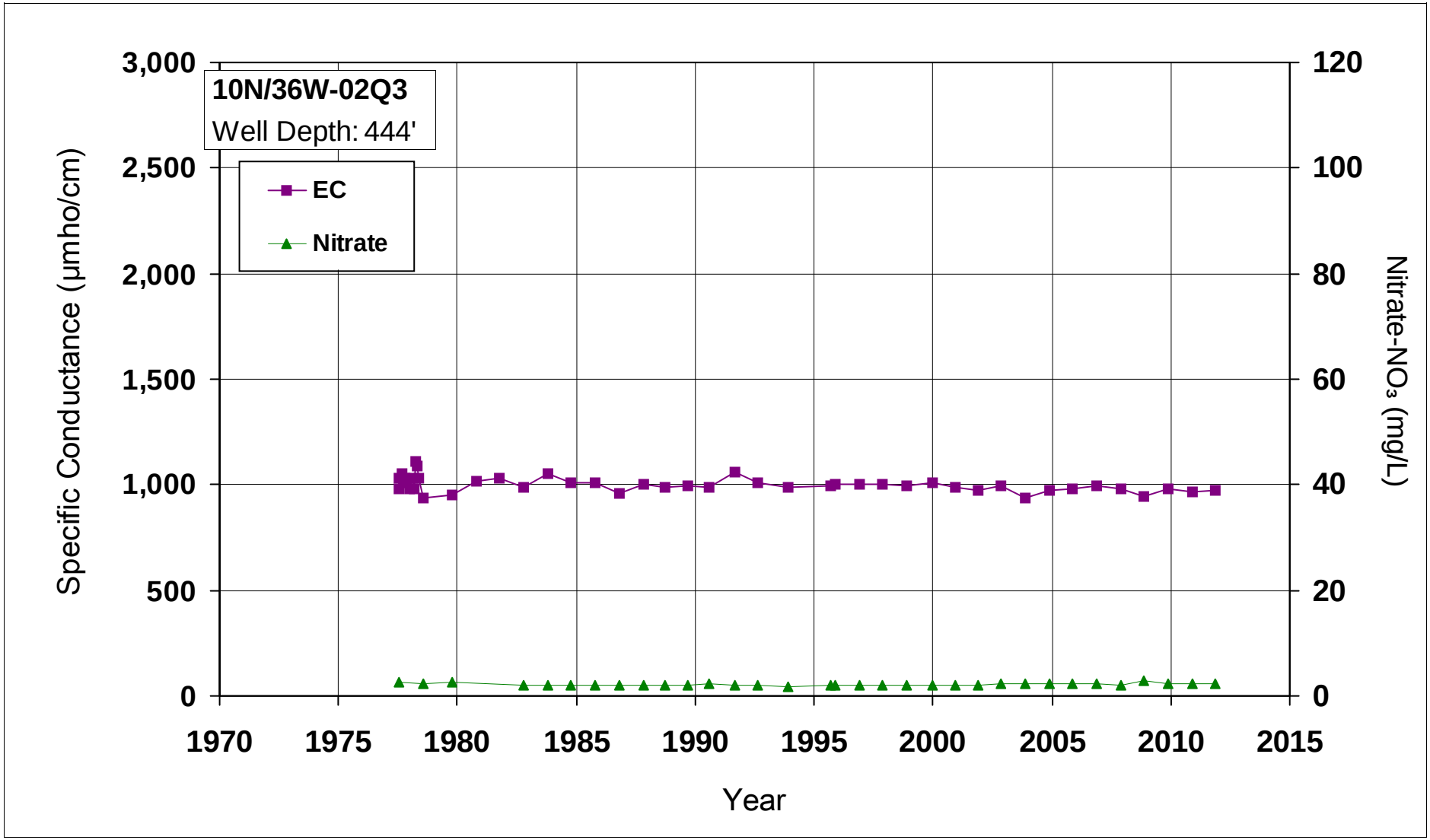
10N/36W-02Q3
Well Depth: 444'
EC
Nitrate
Specific Conductance (µmho/cm)
Nitrate-NO₃ (mg/L)
Year
3,000
2,500
2,000
1,500
1,000
500
0
120
100
80
60
40
20
0
1970
1975
1980
1985
1990
1995
2000
2005
2010
2015

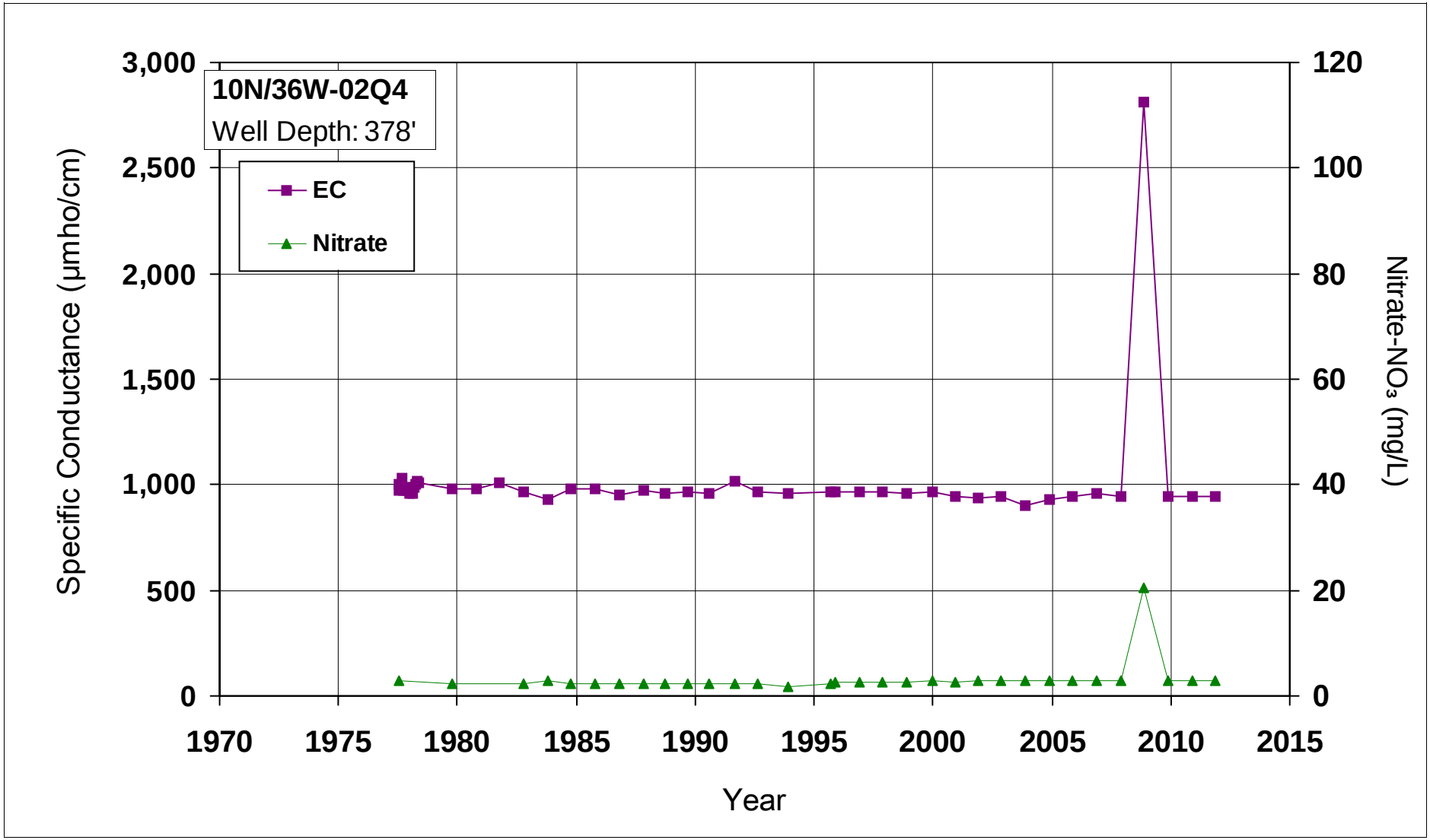
10N/36W-02Q4
Well Depth: 378'
EC
Nitrate
Specific Conductance (µmho/cm)
Nitrate-NO₃ (mg/L)
Year
3,000
2,500
2,000
1,500
1,000
500
0
120
100
80
60
40
20
0
1970
1975
1980
1985
1990
1995
2000
2005
2010
2015

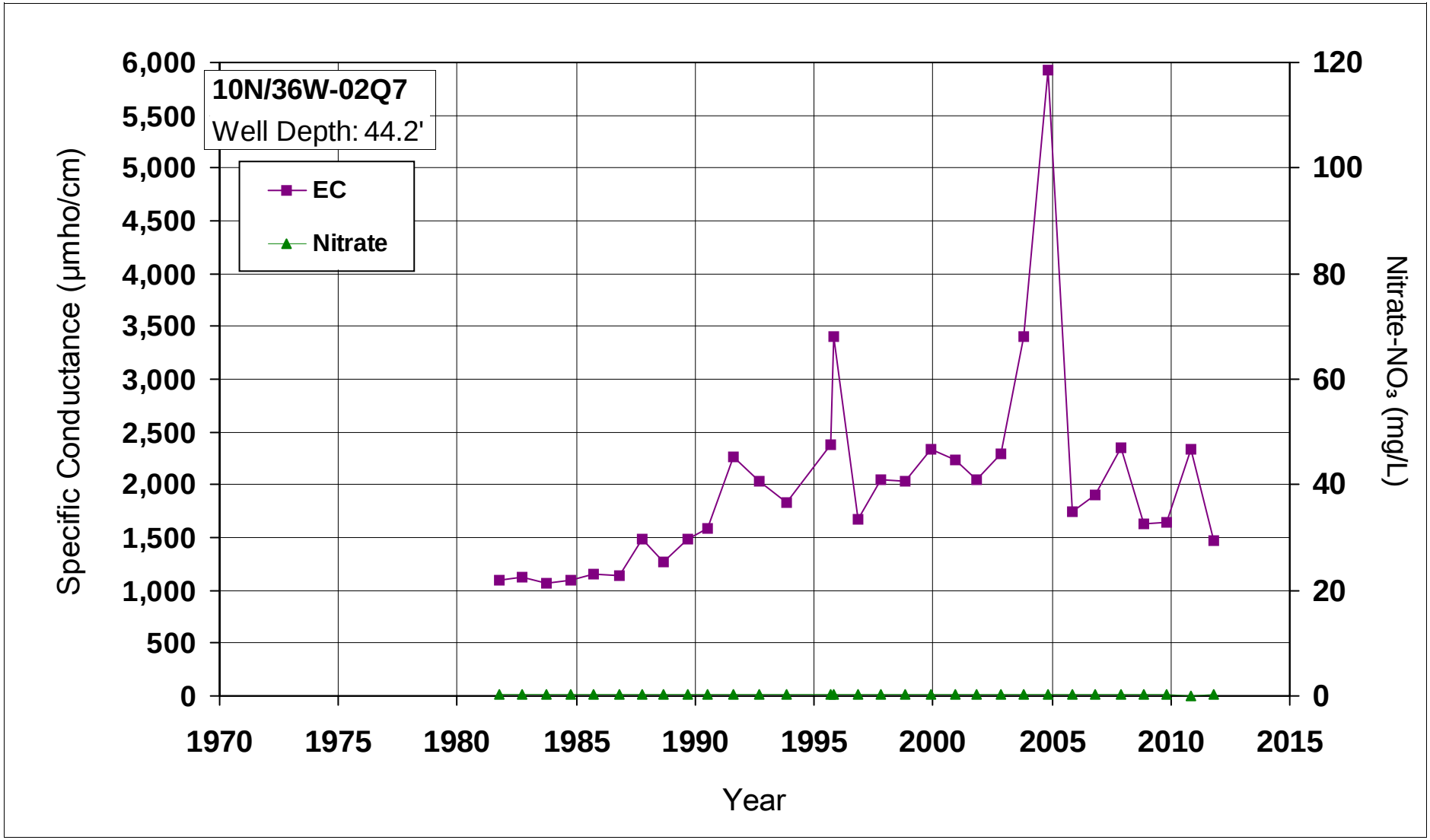
10N/36W-02Q7
Well Depth: 44.2'
EC
Nitrate
Specific Conductance (µmho/cm)
Nitrate-NO₃ (mg/L)
Year
6,000
5,500
5,000
4,500
4,000
3,500
3,000
2,500
2,000
1,500
1,000
500
0
120
100
80
60
40
20
0
1970
1975
1980
1985
1990
1995
2000
2005
2010
2015

Appendix D

Historical Return Flows
From Waste Water Treatment Plants

Appendix D
Estimated Historical Return Flows from Wastewater Treatment Plants
Santa Maria Valley Management Area
(all units in afy unless otherwise noted)

	Total Water Use				Total WWTP Influent			Total WWTP Influent by Purveyor										Total WWTP Effluent					
								Santa Maria				Golden State Water Company				Guadalupe							
								Influent to WWTP	Influent to WWTP	Total Influent to WWTPs		Influent to WWTP	Influent to WWTP	Total Influent to WWTPs		Influent to WWTP		SM	LSD				Guad
Year	SM	GSWC	GSWC[1]	Guad	SM	LSD	Guad	(SM)	(LSD)[2]	(SM and LSD)	% Water Use[3]	(LSD)	(SM)	(SM and LSD)	% Water Use[4]	(Guad)	% Water Use[5]	Total	Brine Injection[6]	Industrial Use	Irrigation	Total	Total
1997	12,522	9,441	9,387	778	8,406	2,706	467	8,077	95	8,172	65.3	2,611	328.9	2,940	31.3	467	60.0	7,566	78	0	2,357	2,435	420
1998	11,085	8,001	7,960	778	7,475	2,252	467	7,140	95	7,235	65.3	2,157	335.6	2,493	31.3	467	60.0	6,728	78	0	1,949	2,027	420
1999	11,859	9,263	9,193	778	7,996	2,643	467	7,665	95	7,760	65.4	2,548	330.9	2,879	31.3	467	60.0	7,196	78	0	2,301	2,379	420
2000	12,679	9,399	9,342	778	8,369	2,825	467	8,025	95	8,120	64.0	2,730	343.8	3,073	32.9	467	60.0	7,532	78	0	2,464	2,542	420
2001	12,594	9,009	8,950	778	8,734	2,870	467	8,375	95	8,470	67.3	2,775	358.6	3,133	35.0	467	60.0	7,860	78	0	2,505	2,583	420
2002	13,312	9,466	9,409	778	8,868	2,632	467	8,512	95	8,607	64.7	2,537	355.4	2,893	30.7	467	60.0	7,981	78	0	2,291	2,369	420
2003	13,499	9,071	9,023	778	9,108	2,626	467	8,629	95	8,724	64.6	2,531	479.0	3,010	33.4	467	60.0	8,197	78	0	2,285	2,363	420
2004	13,650	9,356	9,302	832	9,555	2,580	499	9,112	95	9,207	67.4	2,485	443.4	2,929	31.5	499	60.0	8,600	78	0	2,244	2,322	449
2005	13,814	8,846	8,802	814	9,657	2,302	488	9,305	95	9,400	68.0	2,207	352.0	2,559	29.1	488	60.0	8,691	78	0	1,994	2,072	439
2006	13,610	8,754	8,700	883	9,487	2,006	529	9,168	95	9,263	68.1	1,911	319.8	2,231	25.6	529	60.0	8,539	78	4	1,724	1,806	477
2007	14,782	9,710	9,652	1,063	9,380	2,150	638	8,971	95	9,066	61.3	2,055	408.6	2,463	25.5	638	60.0	8,442	78	16	1,841	1,935	574
2008	14,235	9,311	9,255	997	9,520	2,271	633	9,026	95	9,121	64.1	2,176	493.7	2,670	28.8	633	63.5	8,568	89	12	1,943	2,044	570
2009	14,172	8,729	8,668	917	9,471	2,237	664	8,952	95	9,047	63.8	2,142	518.9	2,661	30.7	664	72.4	8,524	73	28	1,912	2,013	598
2010	13,294	7,735	7,681	880	8,721	2,336	664	8,177	95	8,272	62.2	2,241	543.6	2,785	36.3	664	75.5	7,849	79	55	1,968	2,102	598
2011	12,665	7,844	7,794	885	9,005	2,361	654	8,442	95	8,537	67.4	2,266	562.5	2,828	36.3	654	73.9	8,104	72	40	2,014	2,125	589

	Effluent Available for Return Flows					Return Flows									
	Santa Maria		Golden State Water Company		Guadalupe	Santa Maria				Golden State Water Company				Guadalupe	
Year	Effluent from WWTP (SM)	Effluent from WWTP (LSD)	Effluent from WWTP (SM)	Effluent from WWTP (LSD)	Effluent from WWTP (Guad)	from WWTP (SM)	from WWTP (LSD)	Total	% Water Use	from WWTP (SM)	from WWTP (LSD)	Total	% Water Use[7]	from WWTP (Guad)	% Water Use
1997	7,270	83	296	2,353	420	7,270	17	7,286	58	296	471	767	8.1	84	11
1998	6,426	82	302	1,945	420	6,426	16	6,442	58	302	389	691	8.6	84	11
1999	6,899	83	298	2,296	420	6,899	17	6,915	58	298	459	757	8.2	84	11
2000	7,223	83	309	2,459	420	7,223	17	7,239	57	309	492	801	8.5	84	11
2001	7,538	83	323	2,500	420	7,538	17	7,554	60	323	500	823	9.1	84	11
2002	7,661	83	320	2,286	420	7,661	17	7,678	58	320	457	777	8.2	84	11
2003	7,766	83	431	2,281	420	7,766	17	7,783	58	431	456	887	9.8	84	11
2004	8,201	83	399	2,240	449	8,201	17	8,217	60	399	448	847	9.1	90	11
2005	8,374	82	317	1,990	439	8,374	16	8,391	61	317	398	715	8.1	88	11
2006	8,251	82	288	1,724	477	8,251	16	8,267	61	288	345	633	7.2	95	11
2007	8,074	81	368	1,853	574	8,074	16	8,090	55	368	371	738	7.6	115	11
2008	8,123	81	444	1,963	570	8,123	16	8,140	57	444	393	837	9.0	114	11
2009	8,057	81	467	1,932	598	8,057	16	8,073	57	467	386	853	9.8	120	13
2010	7,360	80	489	2,022	598	7,360	16	7,376	55	489	404	894	11.6	120	14
2011	7,598	81	506	2,044	589	7,598	16	7,614	60	506	409	915	11.7	118	13

Estimated

SM	City of Santa Maria
GSWC	Golden State Water Company
Guad	City of Guadalupe
LSD	Laguna Sanitation District

1) Excludes Sisquoc system water use (typically 40 - 70 afy) for effluent return flow calculations.
2) Average Influent from Santa Maria to LSD (from LSD staff, April 2010)
3) Percentage of SM total water use as total influent to WWTPs = 65.3
4) Percentage of GSWC water use (excluding Sisquoc System) as total influent to WWTPs = 31.3
5) Percentage of Guadalupe total water use as influent to WWTP (from Guad staff, April 2009) = 60.0
6) Average brine amount to injection well for 1997 - 2007; reported amounts for 2008 to present = 78.1
7) Percentage of GSWC total water use (including Sisquoc System) as total influent to WWTPs.