Revised 3/8/04

Eastern Municipal Water District

Sewer System Construction

Sewer Standard Drawings:

SA-47	Paving Detail Around Manholes
SA-79	Connecting Dissimilar Sewer Pipes
SA-87	Sewer Chimney Lateral
SB- 8	Locking Type Manhole Cover & Frame
SB-30	Reinforced Precast Shallow Manhole
SB-49	Pipe Casing (Sewer Main)
SB-52	Sewer Cleanout
SB-52A	Sewer Tree Laterals & Cleanout
SB-53	Precast Reinforced Concrete, 48" & 60" I.D. Manhole
SB-56	Precast Non-Reinforced Concrete, 48" I.D. Manhole
SB-58	Terminus Manhole
SB-61	Manhole Cover & Frame Standard & Watertight Manholes
SB-63	Sewer Connection at Concrete Encasement
SB-70	Grease Interceptor with 24" Sampling Box
SB-73	36" I.D. Sampling Manhole

Eastern Municipal Water District

Sewer System Construction

SB-75	Sand / Oil Interceptor with 24" Sampling Box
SB-157	Pipe Zone Bedding for Sewer Pipe
SB-158	Trench Backfill for Sewer Pipe
SB-159	Classification of Pipe Zone Bedding for Sewer Pipe
SB-176	Sewer Lateral Connections
SB-177	Sewer Laterals
SB-179	48" and 60" Diameter Manhole Installation for HDPE Sewer Main

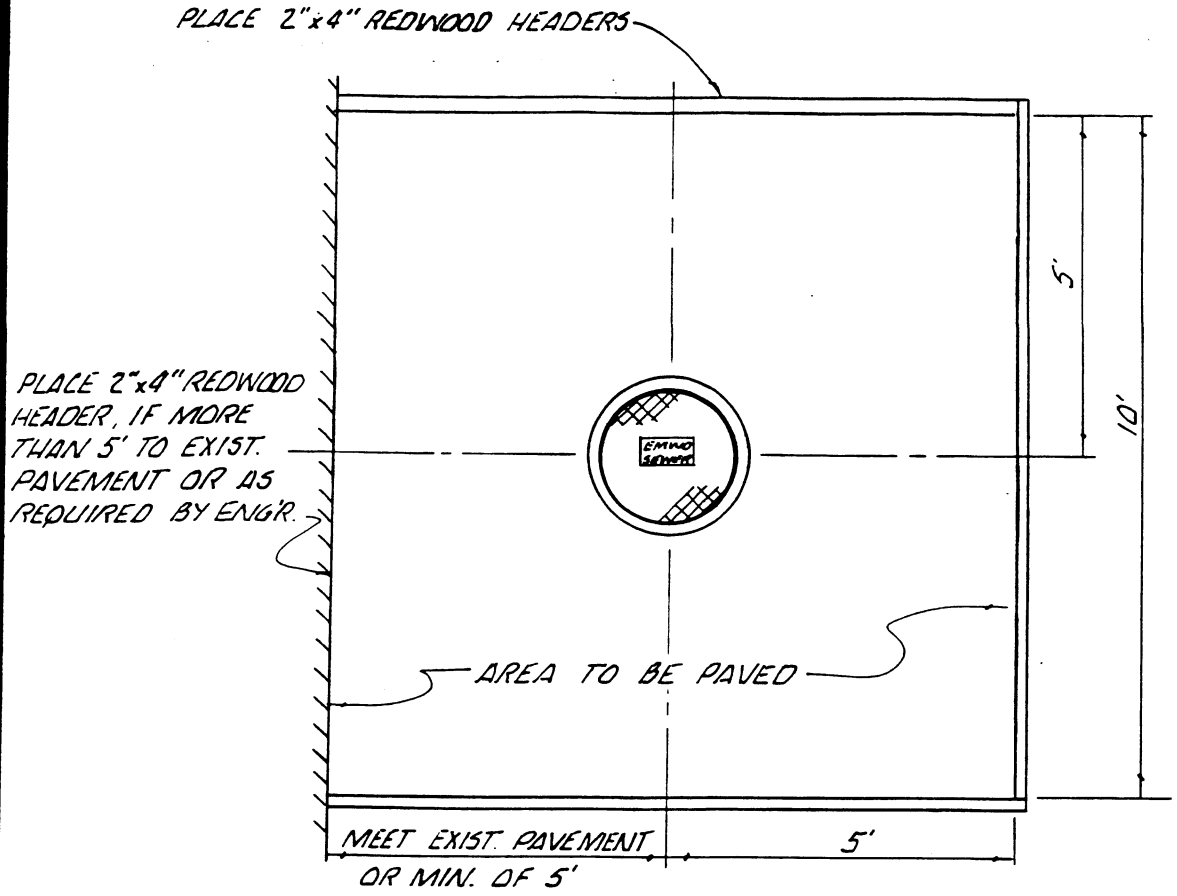

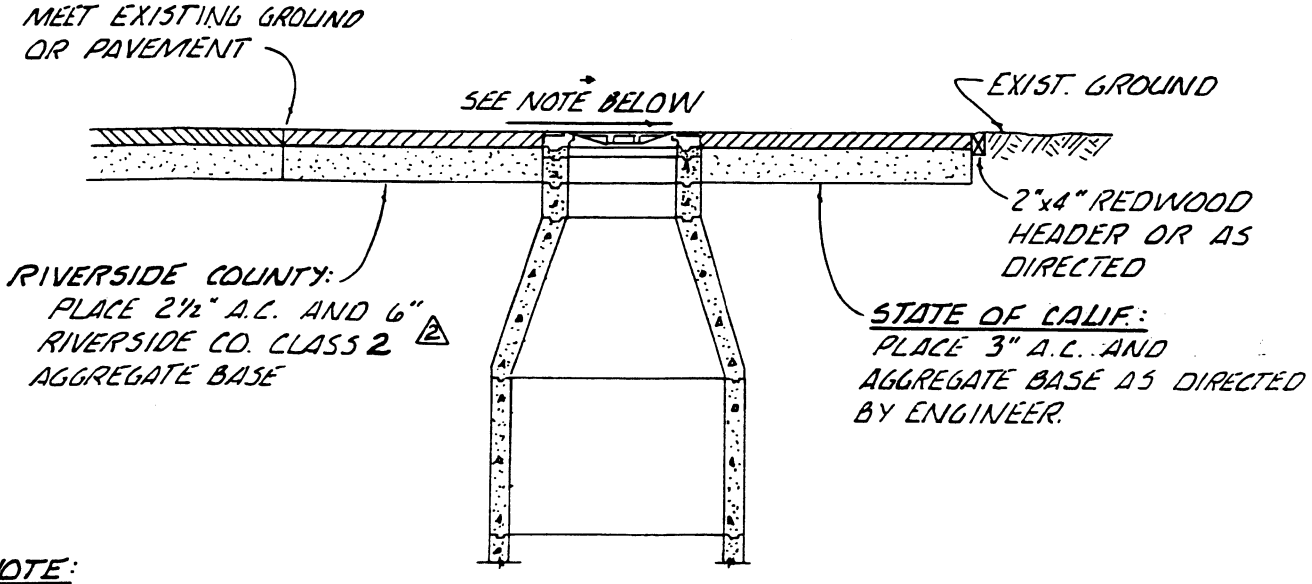

NOTE:
SLOPE WILL CONFORM WITH RIVERSIDE CO. ROAD OR STATE HIGHWAY IMPROVEMENT STANDARDS AND SPECIFICATIONS, AS APPLICABLE, OR MEET EXIST. CONDITIONS AS DIRECTED BY ENGINEER.

2

REVISIONS	SCALE NONE	INITIAL	DATE
1 REMOVE STEPS	DESIGNED		
	DRAWN	DRK	2-2-76
3/12/91	CHECKED	RS	2-2-76
2 CHG'D BASE 6/7/96	RECOMMENDED		8-9-76
	APPROVED		
	DATE	GEN. MGR. & CHIEF ENG.	

EASTERN MUNICIPAL WATER DISTRICT
RIVERSIDE COUNTY, CALIFORNIA

STANDARD DRAWING
PAVING DETAIL AROUND MANHOLES

SA-47

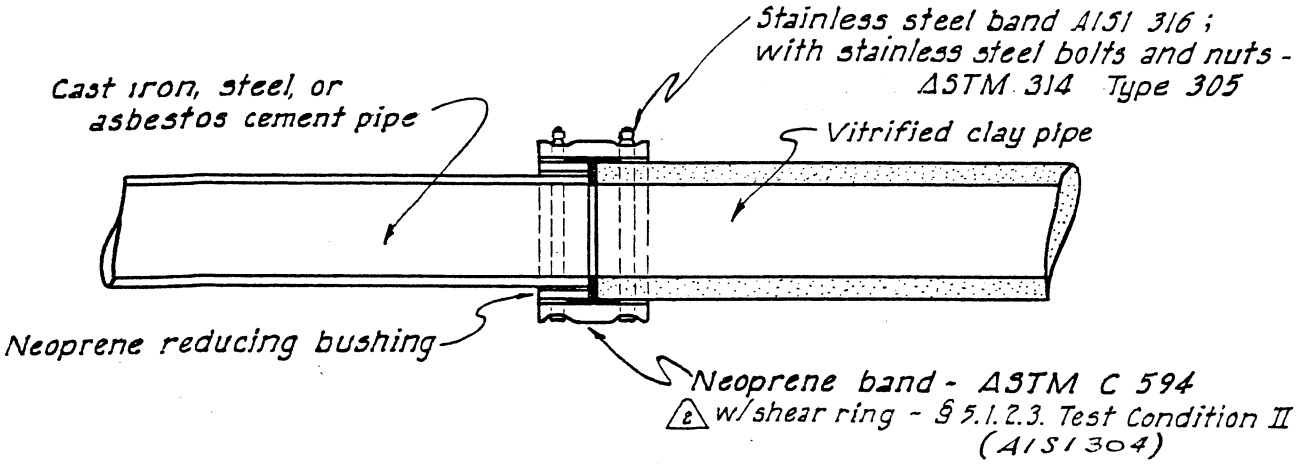

FLEXIBLE COUPLING
(NON-PRESSURE)

NOTE:

No connection allowable at bell end of V.C.P. ...
Cut bell end off V.C.P. prior to making connection.

REVISIONS	SCALE	None	DATE
1 Redrawn - LAH	DESIGNED	J.H.B.	
2 Revised band note LAH	DRAWN	McM	8-3-70
	CHECKED	J.V.S	8-4-70
	RECOMMENDED		
	APPROVED	Gen Mgr. & Chief Eng.	

EASTERN MUNICIPAL WATER DISTRICT
RIVERSIDE COUNTY, CALIFORNIA

STANDARD DRAWING
CONNECTING DISSIMILAR SEWER PIPES

SA - 70

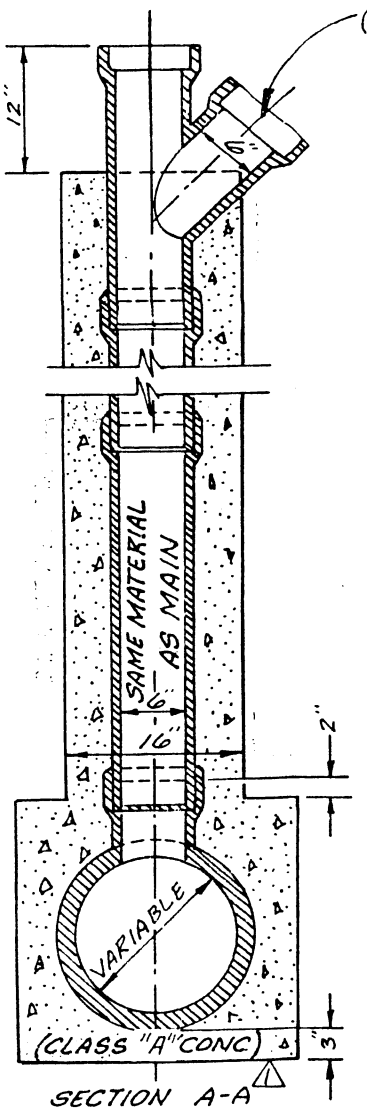

NOTES

1. The upper end of the chimney pipe shall be 8 feet below the grade of the lower curb, unless otherwise specified.

2. Where one or two house connections are to be joined to the chimney pipe use a single "Y" branch; where three house connections are to be joined use double "Y" branch; where four or more house connections are to be joined use Section "C".

3. Where the chimney pipe is to be used for a single house connection face "Y" towards property to be served; where used for house connections on both sides of the sewer, the "Y" shall face toward the right (looking upgrade) and the house on that side shall be connected to the "Y" branch by a 6-inch one-eighth bend and the house connection on the left side shall be connected to the upper end of the chimney by a 6-inch one-quarter bend unless otherwise specified.

4. The main sewer pipe shall be of the material shown on the plans.

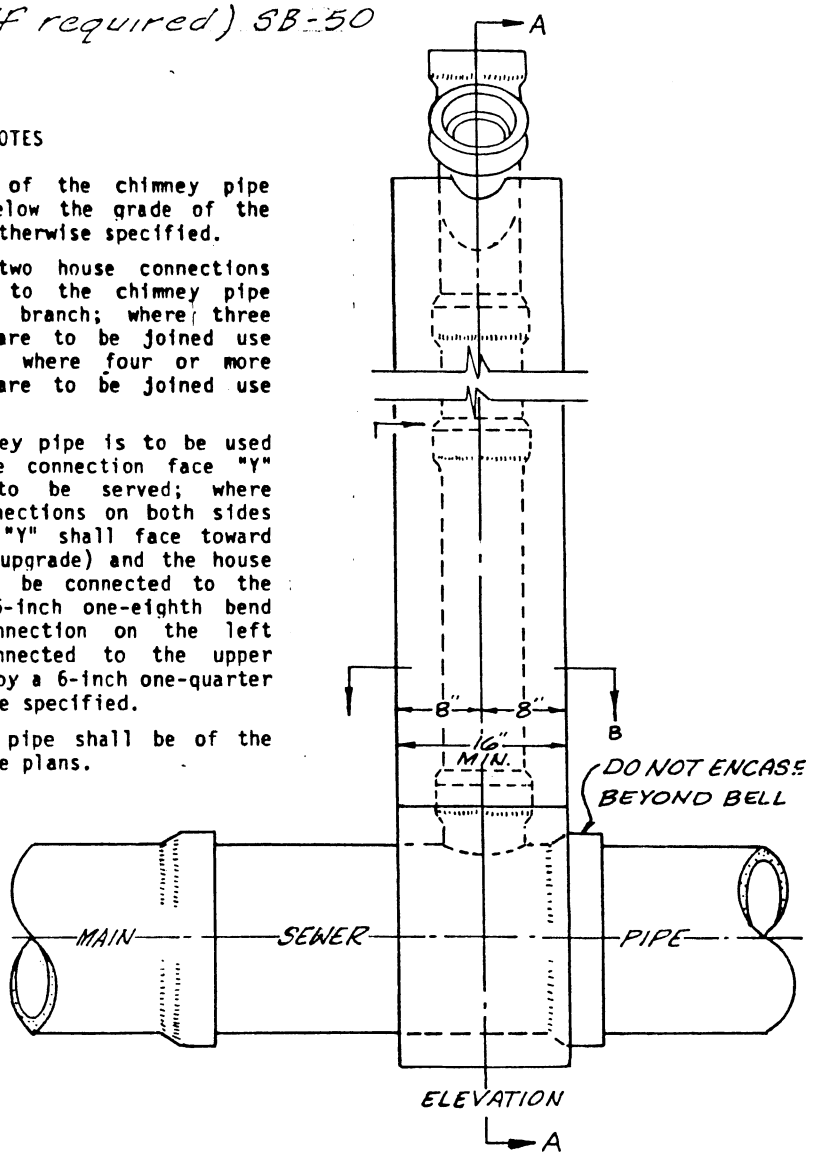

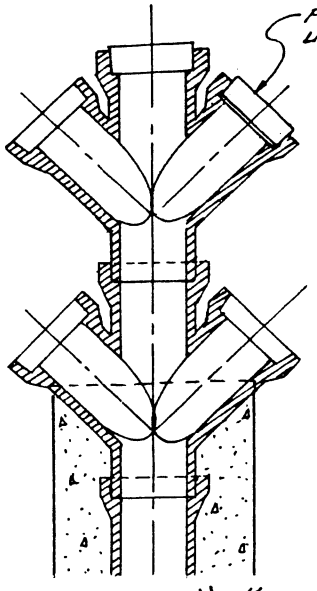

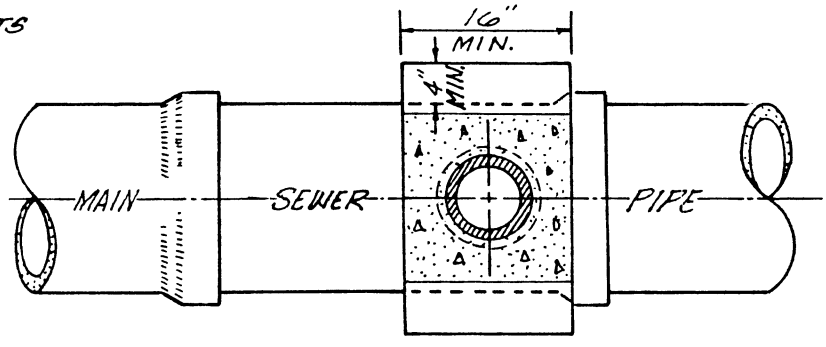

REVISIONS	SCALE	INITIAL	DATE
1 CHANGED CL.C TO SL.P CONC. 11/86	DESIGNED		
	DRAWN G.H. 2/19/82		
	CHECKED		2/[illegible]
	RECOMMENDED		3-13-85
	APPROVED		
	DATE	CHIEF ENG.	

EASTERN MUNICIPAL WATER DISTRICT
RIVERSIDE COUNTY, CALIFORNIA

SEWER CHIMNEY LATERAL STANDARD DRAWING

SA-87

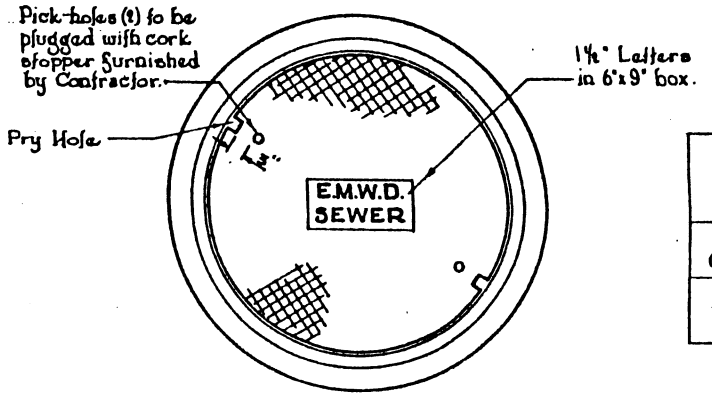

TOP VIEW

MANHOLE COVER & FRAME REQUIRED DIMENSIONS					
Clear Opening	Cover O.D.	Frame I.D.	Frame Height	Overall Base	Total Wt.
22 ¾"	24"	24 ¼"	4 ⅛"	30 ¼"	365 lbs.

NOTES

1. Manhole cover shall be designed for A.A.S.H.O. H-20 loading.
2. Cast iron shall have min. tensile strength of 30,000 lb. per sq. in.
3. Manhole cover shall be Alhambra Foundry Co. Type A-1175 for 22¾" dia. (Catlg. 17-Mar.'65) or approved equal.
4. (3) Marker posts shall be installed to mark manhole locations in unimproved areas

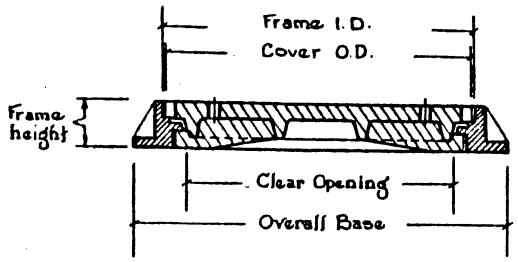

SECTION

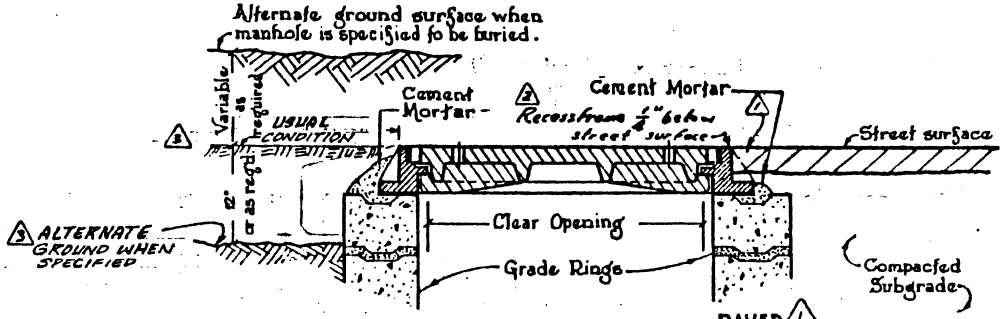

OPEN FIELD

PAVED (1) ROAD WAY

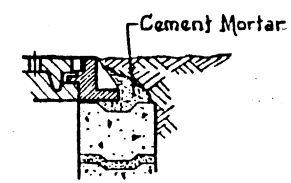

DIRT ROADWAY OR (1) ROAD WAY SHOULDER

(3) (Use A.C. Apron on all unimproved roads - (Std. Dwg. SA-47)

SECTION THRU FRAME SHOWING TYPICAL INSTALLATION

REVISIONS				
NO.	DATE	INITIAL	DESCRIPTION	APP'VD
1	1-14-72	M&M	Rev'sd cem. mortar detail on paved rdway	[illegible]
2	12-19-79	LAM	Added Alt. No. 2 Collar & ¼" recess	[illegible]
3	3-21-85	G.H.	Removed Conc. Collar & other Rev.	[illegible]

REFERENCES

APPROVALS

DESIGN	CONSTRUCTION	OPERATIONS
J.V.S.		MEP 7/1/71

SCALE		DATE
DESIGNED		
DRAWN	SJ	6-21-71
TRACED		
CHECKED		
SUBMITTED	LAM 7-1-71	
RECOMMENDED		

EASTERN MUNICIPAL WATER DISTRICT
RIVERSIDE COUNTY, CALIFORNIA

STANDARD DRAWING
LOCKING TYPE
MANHOLE COVER AND FRAME

APPROVED [signature] GENERAL MANAGER & CHIEF ENGINEER

SB-8

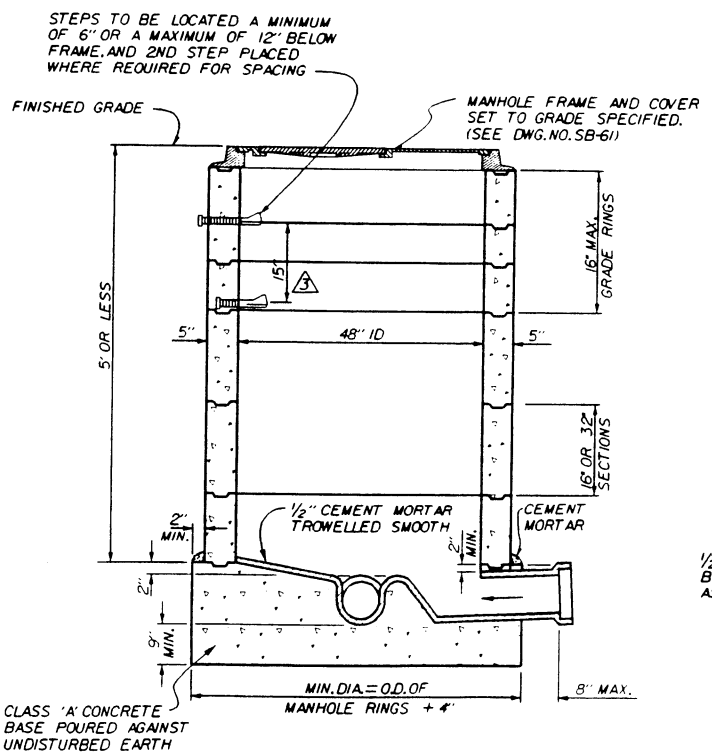

SECTIONAL ELEVATION A-A

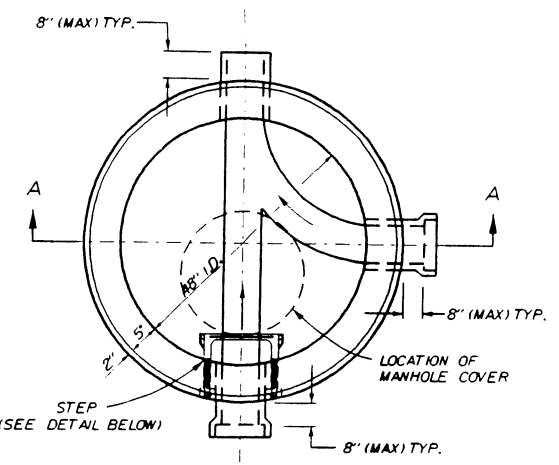

BASE PLAN

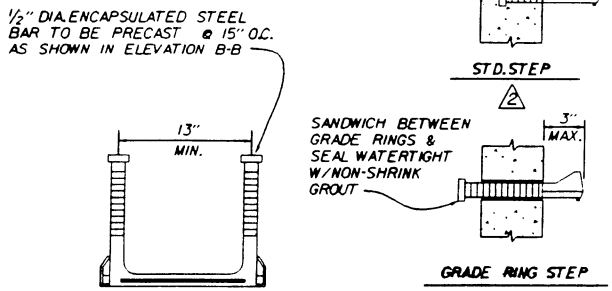

MANHOLE STEP DETAILS 3

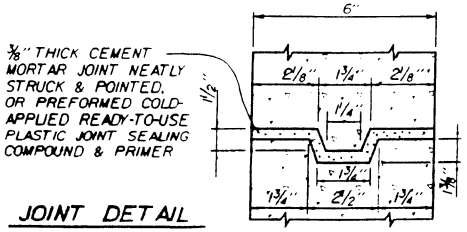

JOINT DETAIL

NOTES

1. REINFORCED PRECAST CONCRETE MANHOLES SHALL CONFORM TO THE APPLICABLE REQUIREMENTS OF A.S.T.M. C-478 AND:
   A. SHALL BE DESIGNED FOR A.A.S.H.O. H-20 LOADING.
   B. CONCRETE SHALL BE COMPACTLY VIBRATED, CENTRIFUGALLY SPUN, OR MECHANICALLY TAMPED.
2. SEWER MAINS ARE TO BE LAID THRU THE MANHOLE WHERE POSSIBLE AND USED AS A FORM FOR THE INVERT. THE TOP 1/2 DIAMETER OF THE PIPE IS TO BE BROKEN OUT TO A NEAT LINE. BROKEN EDGES SHALL BE PLASTERED SMOOTH WITH CEMENT MORTAR.
3. CONCRETE BASE SHALL BE OF CLASS "A" CONCRETE AND PLACED IN ONE OPERATION. CONCRETE INVERTS SHALL BE TRUE TO GRADE AND ALIGNMENT, AND FINISHED WITH A SMOOTH SURFACE. SPECIAL CARE SHALL BE USED IN FORMING ALL CHANNELS TO FACILITATE THE FLOW OF SEWAGE.
4. SHALLOW MANHOLE AS SHOWN HEREON TO BE INSTALLED WHEN DEPTH TO PIPE SHELF IS LESS THAN 5' FROM FINISHED STREET GRADE.
5. SEE DRAWING SB-61 FOR DETAILS AND INSTALLATION OF MANHOLE COVER AND FRAME.
6. MANHOLE STEPS SHALL BE CAST IN PLACE AND ORIENTED 180° FROM MANHOLE OUTLET. GRADE RING STEPS SHALL BE 2 PLACED BETWEEN GRADE RINGS AND GROUTED IN PLACE. 3 BOTTOM STEP TO BE USED AS CLEANING HOOK AND SHALL BE PLACED 6" MIN. AND 12" MAX FROM TOP OF SHELF.

REVISIONS

NO.	DATE	INITIAL	DESCRIPTION	APP'D	DATE
1	8/6/96	K.E.R.	REDRAWN W/CADD ON MYLAR	VJB	8 7 96
2	11/13/96	K.E.R.	REVISED STEP DETAIL AND NOTE 6	VJB	11/14/96
3	12/11/96	K.E.R.	REVISED STEP DETAIL AND NOTE #6	VJB	12/11/96
4	7/21/97	KER	REVISED SHALLOW MANHOLE	VJB	6/28/97

APPROVALS

	INITIAL	DATE
DESIGN	C.H.S	1/20 72
CONSTRUCTION		
INSPECTION		
OPERATIONS		
SUBMITTED	LM	4 24 72

REFERENCES: ORIGINAL SB-30 DRAWN 4-20-72
FILE I.D.: /USR/KARL/STNDRDS/SB30NEW.DGN

SCALE: NONE
DRAWN BY KER

RECOMMENDED _____ DIRECTOR OF ENGINEERING DATE

APPROVED Doyle J. Boen 4/72
CHIEF ENGINEER DATE

EASTERN MUNICIPAL WATER DISTRICT
STANDARD DRAWING

REINFORCED PRECAST SHALLOW MANHOLE

SB-30 4

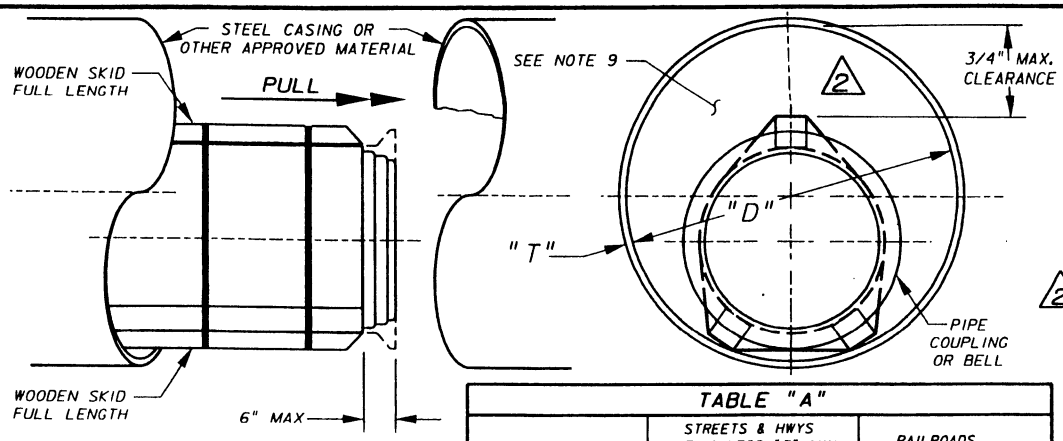

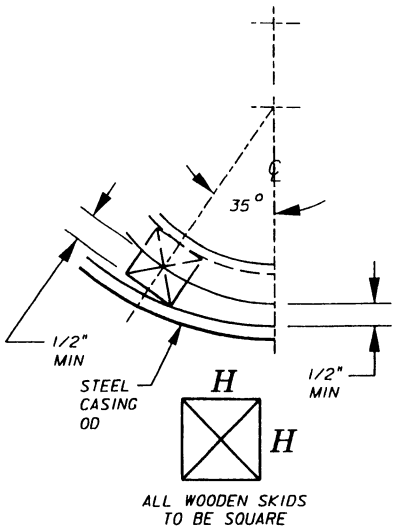

ALL WOODEN SKIDS
TO BE SQUARE

TABLE "A"

	STREETS & HWYS THICKNESS "T" MIN		RAILROADS
DIAMETER "D" (INCHES)	UP TO 150' LENGTH	OVER 150' LENGTH	STEEL THICKNESS "T" (MINIMUM)
4'-10" ID	1/4"	1/4"	4"-12":1/4"
12"-16" OD	1/4"	1/4"	14"-16":9/32"
18"-20" OD	1/4"	1/4"	18":5/16" 20":11/32"
22" OD	1/4"	1/4"	3/8"
24" OD	1/4"	1/4"	13/32"
26" OD	1/4"	1/4"	7/16"
28" OD	1/4"	1/4"	15/32"
30" OD	3/8"	1/2"	15/32"
32" OD	3/8"	1/2"	1/2"
34"-36" OD	3/8"	1/2"	17/32"
38" OD	3/8"	1/2"	9/16"
40" OD	1/2"	3/4"	9/16"
42" OD	1/2"	3/4"	9/16"
48"-60" OD	1/2"	3/4"	AS REQUIRED
62"-72" OD	3/4"	3/4"	AS REQUIRED

GENERAL NOTES

1. THE STEEL CASING SHALL BE INSTALLED BY MEANS OF JACKING OR DRY BORING, EXCEPT WHERE SPECIFICALLY NOTED ON THE PLANS TO BE INSTALLED BY OPEN TRENCH CONSTRUCTION.
2. CASING DIAMETER SHALL BE A MINIMUM OF 4 INCHES GREATER THAN THE OUTSIDE BELL DIAMETER, AND SEWER PIPE CASING SHALL NOT BE LESS THAN 30 INCHES IN DIAMETER UNLESS SPECIFICALLY NOTED.
3. MINIMUM CASING THICKNESS SPECIFIED IN "TABLE A" IS REQUIRED FOR STEEL CASING IN PLACE, AND DOES NOT ACCOUNT FOR CONSTRUCTION LOADS. THE CONTRACTOR SHALL BE SOLELY RESPONSIBLE FOR THE STRUCTURAL SUFFICIENCY OF THE CASING DURING CONSTRUCTION, AND ALSO THE METHOD OF INSTALLATION.
4. GRAVITY SEWER PIPELINES AND PRESSURE PIPELINES SHALL BE SUPPORTED ON PIPE SKIDS SUBJECT TO THE APPROVAL OF THE ENGINEER. 2
5. ALL SKIDS ARE TO BE SQUARE IN CROSS SECTION AND MAY BE MADE FROM REDWOOD, #2 OR BETTER DOUGLAS FIR, SOUND MATERIAL, TO BE WALMANIZED OR CREOSOTED (REDWOOD NEED NOT BE TREATED).
6. SKIDS SHALL BE ATTACHED TO PIPE BY STRAPPING WITH A STANDARD STRAPPING MACHINE TO HOLD SKIDS IN PLACE DURING PULLING OPERATIONS. USE STAINLESS STEEL BANDS, OR METHOD OF "CLEATING" SKIDS TOGETHER, AS APPROVED.
7. FLEXIBLE PIPE (PVC, ABS, ETC.) SHALL HAVE SPACER GUIDE ALONG ON THE TOP TO PREVENT PIPE FROM FLOATING. PIPE WITHIN CASING TO BE BONDED TOGETHER AT THE JOINTS FOR AN INTERGRAL UNIT PER MANUFACTURER'SRECOMMENDATONS.
TWO (2) APPROVED FLEXIBLE COUPLINGS SHALL BE USED AT EACH END OF CASING PER SB-63. 2
8. NOTICE AS REQUIRED BY THE DISTRICT SHALL BE GIVEN PRIOR TO CONSTRUCTION, FOR THE DISTRICT INSPECTION OF CASING PIPE AND CARRIER PIPE INSTALLATION. THE AS BUILT LOCATION AND GRADE OF CASING PIPE SHALL BE APPROVED BY THE DISTRICT PRIOR TO INSTALLATION OF THE CARRIER PIPE. DEPARTURES FROM PLANNED LOCATION OR GRADE OF THE CASING PIPE SHALL REQUIRE A FIELD SURVEY FOR CARRIER PIPE REDESIGN IF FEASIBLE, OR ABANDONMENT IN FAVOR OF A NEW INSTALLATION.
9. THE TOTAL ANNULAR SPACE SHALL BE GROUTED PER EMWD SPEC. SECT. 03604, UNLESS OTHERWISE SPECIFIED ON THE CONSTRUCTION DRAWINGS. 2

REVISIONS

NO.	DATE	INITIAL	DESCRIPTION	APP'D	DATE
1	1/22/99	GR	REDRAWN W/CADD ON MYLAR	WB	10/15/03
2	8/29/03	CM	REVISED NOTES & ADDED TOP SKID		

REFERENCES:

FILE I.D.: \\niagra apl\eng\std dwgs\sb49.dgn

SCALE: NONE

DRAWN BY McM

APPROVALS

	INITIAL	DATE
DESIGN	JVS	3/21/72
CONSTRUCTION	BLM	
INSPECTION		
OPERATIONS	CAG	
SUBMITTED	LAM	6/29/72

EASTERN MUNICIPAL WATER DISTRICT

EASTERN MUNICIPAL WATER DISTRICT

EASTERN MUNICIPAL WATER DISTRICT
STANDARD DRAWING

PIPE CASING
SEWER MAIN PIPELINE

APPROVED Doyle F. Boen
GENERAL MANAGER AND CHIEF ENGINEER DATE

SB-49 2

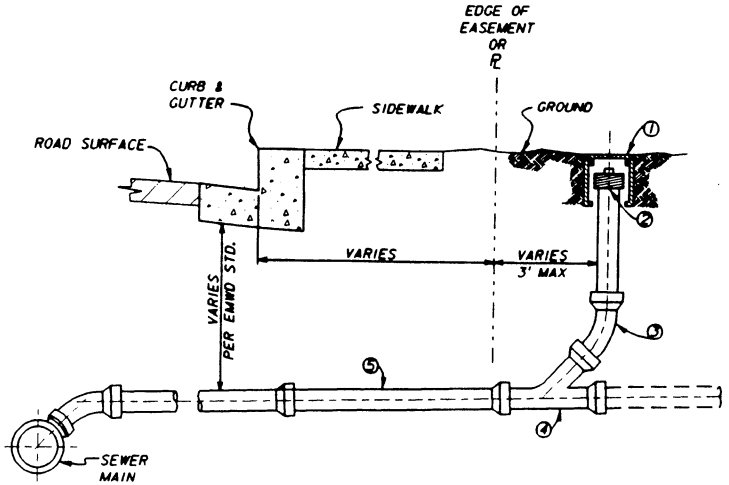

MATERIALS LIST

① BROOKS I-RT VALVE BOX MARKED "SEWER", OR APPROVED EQUAL.

② THREADED CAP WITH SQUARE NUT.

③ MINIMUM 3-1/2" SEWER PIPE PER UNIFORM PLUMBING CODE.

④ WYE PER UNIFORM PLUMBING CODE.

⑤ MINIMUM 4" LATERAL, OR AS SHOWN ON PLANS, PER EMWD STANDARDS.

NOTES

1. PLACE CLEANOUT A MAXIMUM OF 3' BEHIND PROPERTY LINE OR EDGE OF EASEMENT.
2. LID MUST BE CAST IRON FOR LOCATING PURPOSES, MARKED "SEWER"

ON-SITE CLEANOUT

N.T.S.

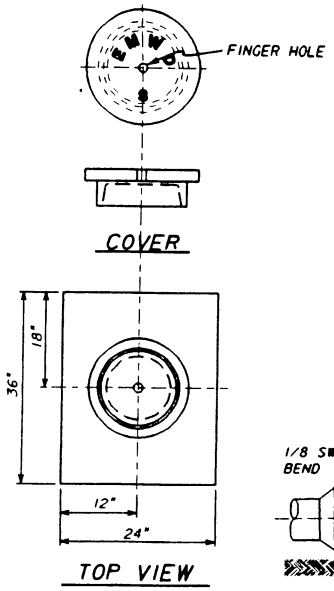

TOP VIEW

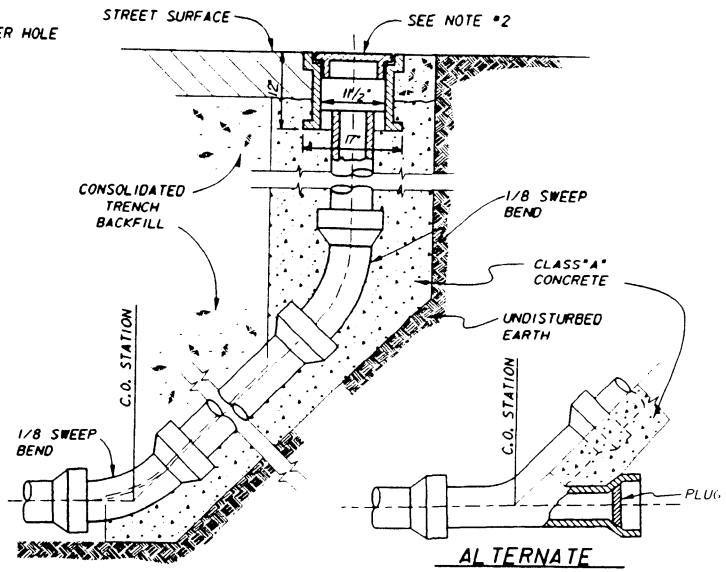

ALTERNATE

FOR LOWER 1/8 BEND, WHERE ORDERED BY ENGINEER OR SHOWN ON PLANS

NOTES

1. CLEANOUT PIPE MUST BE THE SAME DIAMETER AND MATERIAL AS MAIN LINE SEWER.
2. CASTING SHALL BE ALHAMBRA FOUNDRY NUMBER A-1241 OR APPROVED EQUAL.
3. COVER, FRAME, AND CONCRETE PAD ARE TYPICAL FOR 8" I.D. MAIN LINE SEWERS ONLY.
4. USE CLASS "A" CONCRETE THROUGHOUT.
5. PLUGS SHALL BE CEMENTED IN PLACE WITH CEMENT MORTAR OR SHALL BE NEOPRENE PLUG OR APPROVED EQUAL.
6. STATION OF LOWER 1/8 BEND OR WYE SHALL CORRESPOND TO THE CLEANOUT STATION SHOWN ON THE CONSTRUCTION DRAWINGS WITH CLEANOUT CONSTRUCTION EXTENDED BEYOND THAT POINT AS NECESSARY.

MAIN LINE CLEANOUT

N.T.S.

REVISIONS					
NO.	DATE	INITIAL	DESCRIPTION	APP'D	DATE
1	2/10/97	KER	REDRAWN W/CADD ON MYLAR	WB	4/23/98

APPROVALS		
	INITIAL	DATE
DESIGN	SJD	8/63
CONSTRUCTION		
INSPECTION		
OPERATIONS		
SUBMITTED		

EASTERN MUNICIPAL WATER DISTRICT
STANDARD DRAWING

SEWER CLEANOUTS
MAIN LINE & ON-SITE

REFERENCES: SUPERCEDES SA-90
FILE I.D.: /USR/KARL/STNDRDS/SB-52

SCALE: NONE
DRAWN BY K.E.R.

RECOMMENDED _____ DIRECTOR OF ENGINEERING DATE

APPROVED Doyle F. Boen CHIEF ENGINEER 8/63 DATE

SB-52

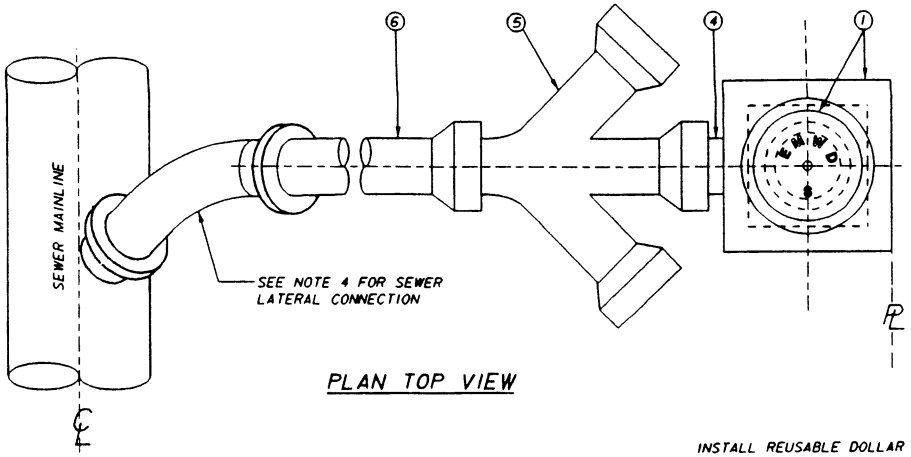

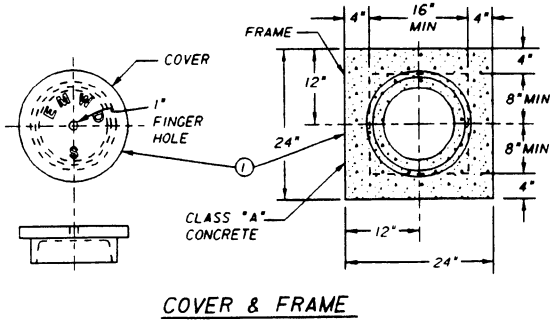

COVER & FRAME

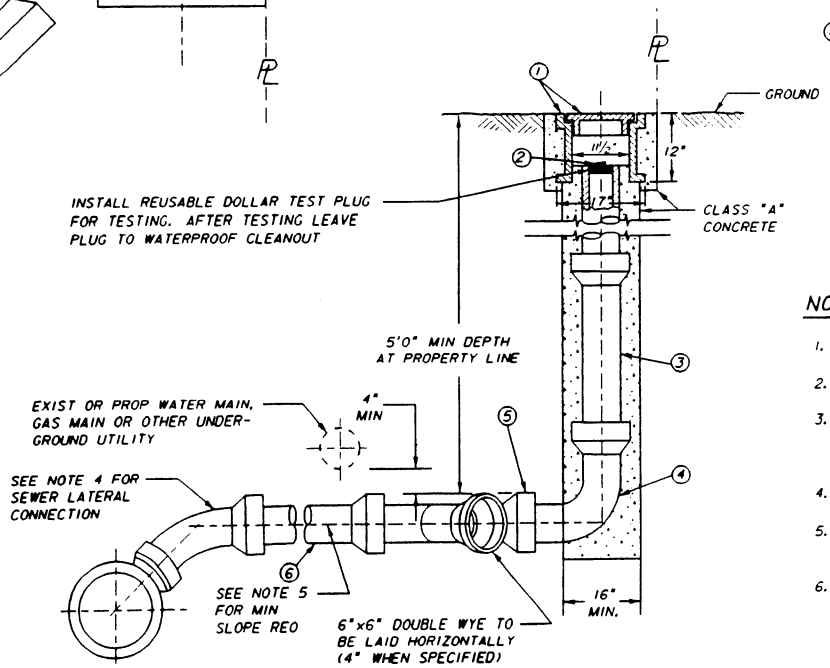

PROFILE

MATERIALS LIST

ITEM NO.	DESCRIPTION
①	CLEANOUT COVER & FRAME ALHAMBRA FOUNDRY A-1241 OR APPROVED EQUAL
②	DOLLAR TEST PLUG
③	6" SEWER PIPE
④	6" 1/4 BEND LONG RADIUS ELBOW OR 4" WHEN SPECIFIED
⑤	6" X 6" DOUBLE WYE OR 4" WHEN SPECIFIED
⑥	6" LATERAL PER SB-177

NOTES

1. ALL MATERIALS MUST BE APPROVED BY EMWD.
2. USE CLASS "A" CONCRETE THROUGHOUT.
3. WYES NOT BEING USED MUST HAVE PLUGS CEMENTED IN PLACE WITH CEMENT MORTAR OR SHALL HAVE NEOPRENE PLUGS OR APPROVED EQUAL.
4. FOR SEWER LATERAL CONNECTIONS SEE SB-176 & SB-177.
5. MINIMUM LATERAL SLOPE MUST BE .020 RISE PER FOOT UNLESS OTHERWISE SPECIFIED ON PLAN AND PROFILE.
6. WYES MUST BE A MINIMUM OF 5'0" DEEP FROM TOP OF SURFACE TO TOP OF WYE AT THE PROPERTY LINE.

REVISIONS				
NO.	DATE	INITIAL	DESCRIPTION	APP'D	DATE
1	1/25/99	GR	REDRAWN W/CADD ON MYLAR	WB	4/29/99

APPROVALS	INITIAL	DATE
DESIGN	JVS	1/24/85
CONSTRUCTION		
INSPECTION	JEW	
OPERATIONS		
SUBMITTED	LAM	3/13/85

EASTERN MUNICIPAL WATER DISTRICT

EASTERN MUNICIPAL WATER DISTRICT
STANDARD DRAWING

SEWER TREE LATERALS AND CLEANOUT

REFERENCES:
FILE I.D.: d_standards: sb52a.dgn

SCALE: NONE
DRAWN BY GH

RECOMMENDED _____ DIRECTOR OF ENGINEERING DATE

APPROVED James H. Bunts, Jr. CHIEF ENGINEER 3/13/85 DATE

SB-52A 1

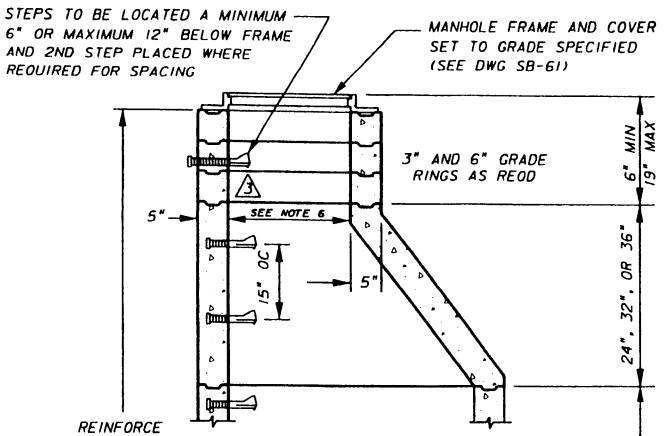

SECTIONAL ELEVATION B-B

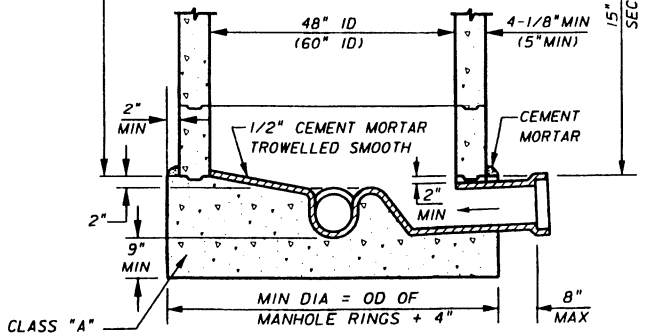

SECTIONAL ELEVATION A-A

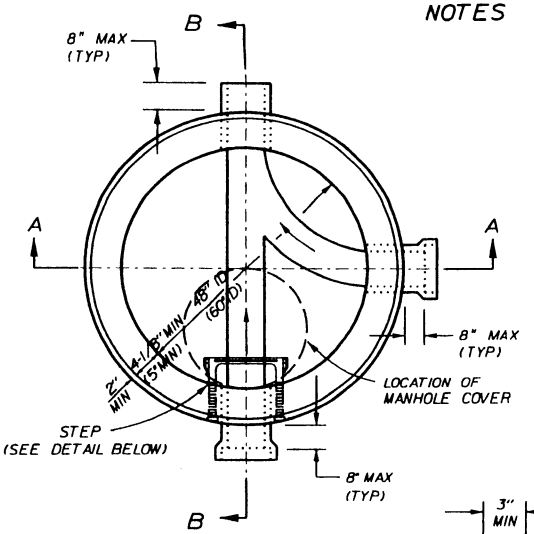

BASE PLAN

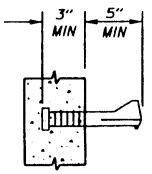

STD STEP △2 △3

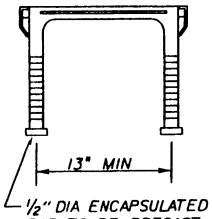

½" DIA ENCAPSULATED STEEL BAR TO BE PRECAST @ 15" OC AS SHOWN IN ELEVATION B-B

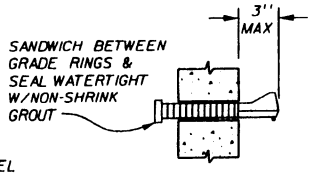

GRADE RING STEP

MANHOLE STEP DETAILS △3

NOTES

1. PRECAST REINFORCED CONCRETE MANHOLES SHALL CONFORM TO THE APPLICABLE REQUIREMENTS OF ASTM C-478 AND:
   A. SHALL BE DESIGNED FOR AASHO H-20 LOADING.
   B. CONCRETE SHALL BE COMPACTLY VIBRATED, CENTRIFUGALLY SPUN, OR MECHANICALLY TAMPED.
2. SEWER MAINS ARE TO BE LAID THRU THE MANHOLE WHERE POSSIBLE AND USED AS A FORM FOR THE INVERT. THE TOP 1/2 DIAMETER OF THE PIPE IS TO BE BROKEN OUT TO A NEAT LINE. BROKEN EDGES SHALL BE PLASTERED SMOOTH WITH CEMENT MORTAR.
3. CONCRETE BASE SHALL BE OF CLASS "A" CONCRETE AND PLACED IN ONE OPERATION. CONCRETE INVERTS SHALL BE TO GRADE AND ALIGNMENT AND FINISHED WITH A SMOOTH SURFACE. SPECIAL CARE SHALL BE USED IN FORMING ALL CHANNELS TO FACILITATE THE FLOW OF SEWAGE.
4. ALL MANHOLE TOPS SHALL BE INSTALLED WITH THE MANHOLE COVER OVER THE UPSTREAM INLET, EXCEPT AS OTHERWISE SPECIFIED.
5. SEE DRAWING SB-61 FOR DETAILS AND INSTALLATION OF MANHOLE COVER AND FRAME.
6. CONTRACTOR TO USE MANHOLES WITH A 24" CLEAR OPENING FOR SEWERS 24" DIA AND SMALLER AND 36" CLEAR OPENING FOR SEWERS LARGER THAN 24" DIA UNLESS OTHERWISE DIRECTED BY THE ENGINEER.
7. STANDARD 48" & 60" MANHOLES AS SHOWN HEREON TO BE INSTALLED WHEN DEPTH TO PIPE SHELF IS GREATER THAN 5' FROM FINISHED STREET GRADE.
8. MANHOLE STEPS SHALL BE EITHER CAST IN PLACE OR M.A. INDUSTRIES STEEL REINFORCED COPOLYMER POLYPROPYLENE PLASTIC DRIVE-IN STEP. INSTALLATION TO BE BY MANHOLE MANUFACTURER. ALL STEPS ORIENTED 180° FROM MANHOLE OUTLET. GRADE RING STEPS SHALL BE PLACED BETWEEN GRADE RINGS AND GROUTED IN PLACE. BOTTOM STEP SHALL BE CAST IN PLACE TO BE USED AS CLEANING HOOK AND SHALL BE PLACED 6" MIN AND 12" MAX FROM TOP OF SHELF.
9. DIMENSIONS PERTAINING TO 60" ID REINFORCED MANHOLES SHOWN IN PARENTHESES (X").
10. JOINT SHALL BE 3/8" THICK CEMENT MORTAR NEATLY STRUCK AND POINTED OR PREFORMED COLD-APPLIED READY-TO-USE PLASTIC JOINT SEALING COMPOUND AND PRIMER.

△2 △3 △4

NOTE: ALL MATERIALS TO BE PER EMWD APPROVED MATERIALS LIST.

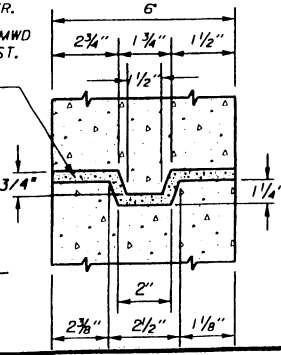

JOINT DETAIL

REVISIONS					
NO.	DATE	INITIAL	DESCRIPTION	APP'D	DATE
△1	8/6/96	KER	REDRAWN W/CADD ON MYLAR	VJB	8/7/96
△2	11/13/96	KER	REVISED STEP DETAIL AND NOTE 8	VJB	11/14/96
△3	12/11/96	KER	REVISED STEP DETAIL AND NOTE 8	VJB	12/11/96
△4	1/9/03	C.M.	REVISED NOTE 8, M.A. IND. DRIVE-IN STEP	VJB	10/15/03

APPROVALS		
	INITIAL	DATE
DESIGN	M.M	1/31/67
CONSTRUCTION		
INSPECTION		
OPERATIONS		
SUBMITTED	LM	

EASTERN MUNICIPAL WATER DISTRICT

EASTERN MUNICIPAL WATER DISTRICT

EASTERN MUNICIPAL WATER DISTRICT
STANDARD DRAWING

PRECAST REINFORCED CONCRETE STANDARD 48" & 60" I.D. MANHOLE

REFERENCES: ORIGINAL SB-53 DRAWN 1-31-67

FILE I.D.: \\niagra ap\eng\std wgs\sb53.dgn

SCALE: NONE

DRAWN BY KER

APPROVED Doyle F. Boen, CHIEF ENGINEER 1/67 DATE

SB-53 △4

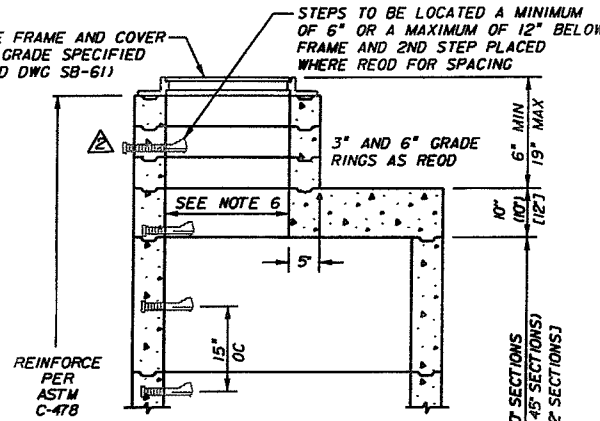

SECTIONAL ELEVATION B-B

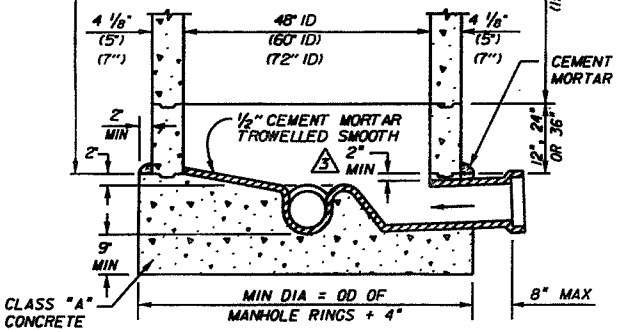

SECTIONAL ELEVATION A-A

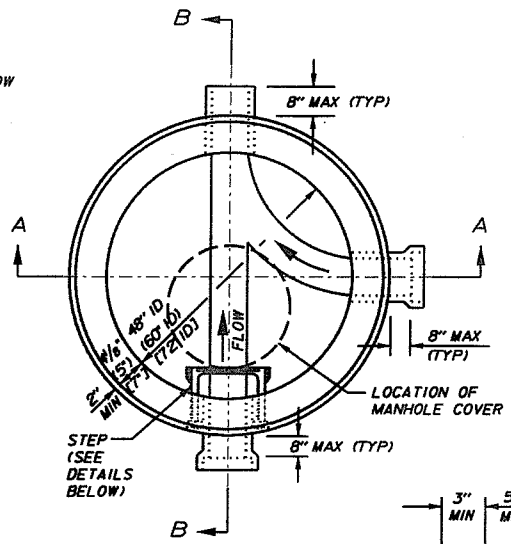

BASE PLAN

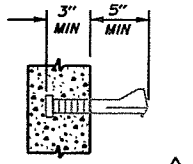

STANDARD STEP 2

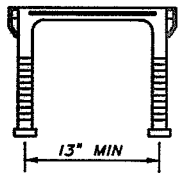

1/2" DIA ENCAPSULATED STEEL BAR TO BE PRECAST @ 15" OC AS SHOWN IN ELEVATION B-B

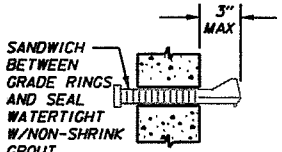

GRADE RING STEP

MANHOLE STEPS DETAILS 2

NOTES

1. PRECAST REINFORCED CONCRETE MANHOLES SHALL CONFORM TO APPLICABLE REQUIREMENTS OF ASTM C-478 AND:
   A. SHALL BE DESIGNED FOR AASHO H-20 LOADING.
   B. CONCRETE SHALL BE COMPACTLY VIBRATED, CENTRIFUGALLY SPUN, OR MECHANICALLY TAMPED.
2. SEWER MAINS ARE TO BE LAID THRU THE MANHOLE WHERE POSSIBLE AND USED AS A FORM FOR THE INVERT. THE TOP 1/2 DIAMETER OF THE PIPE IS TO BE BROKEN OUT TO A NEAT LINE. BROKEN EDGES SHALL BE PLASTERED SMOOTH WITH CEMENT MORTAR.
3. CONCRETE BASE SHALL BE OF CLASS "A" CONCRETE AND PLACED IN ONE OPERATION. CONCRETE INVERTS SHALL BE TO GRADE AND ALIGNMENT AND FINISHED WITH A SMOOTH SURFACE. SPECIAL CARE SHALL BE USED IN FORMING ALL CHANNELS TO FACILITATE THE FLOW OF SEWAGE.
4. ALL MANHOLE TOPS SHALL BE INSTALLED WITH THE MANHOLE COVER OVER THE UPSTREAM INLET, EXCEPT AS OTHERWISE SPECIFIED.
5. SEE DWG SB-61 FOR DETAILS AND INSTALLATION OF MANHOLE COVER AND FRAME.
6. CONTRACTOR TO USE MANHOLES WITH A 24" CLEAR OPENING FOR SEWERS 24" DIA AND SMALLER AND 36" CLEAR OPENING FOR SEWERS LARGER THAN 24" UNLESS OTHERWISE DIRECTED BY THE ENGINEER.
7. STANDARD 48" MANHOLE AS SHOWN HEREON TO BE INSTALLED WHEN DEPTH TO PIPE SHELF IS GREATER THAN 5' FROM FINISHED STREET GRADE.
8. MANHOLE STEPS SHALL BE CAST IN PLACE AND ORIENTED 180^ FROM MANHOLE OUTLET. GRADE RING STEPS SHALL BE PLACED BETWEEN GRADE RINGS AND GROUTED IN PLACE. BOTTOM STEP TO BE USED AS CLEANING HOOK AND SHALL BE PLACED 6" MIN AND 12" MAX FROM TOP OF SHELF.
9. DIMENSIONS PERTAINING TO 60" ID REINFORCED MANHOLES SHOWN IN PARENTHESES (X"). DIMENSIONS PERTAINING TO 72" ID REINFORCED MANHOLES SHOWN IN BRACKETS [X"].

3 3/8" THICK CEMENT MORTAR JOINT NEATLY STRUCK AND POINTED OR PREFORMED COLD-APPLIED READY TO USE PLASTIC JOINT SEALING COMPOUND AND PRIMER

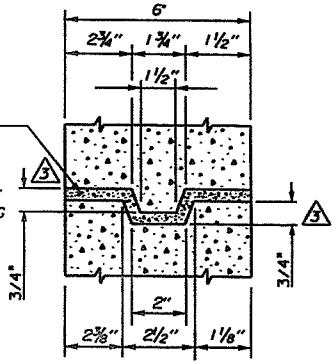

JOINT DETAIL

REVISIONS					
NO.	DATE	INITIAL	DESCRIPTION	APP'D	DATE
1	11/14/96	KER	REDRAWN W/CADD ON MYLAR	VJB	11/14/96
2	12/11/96	KER	REVISED STEP DETAIL AND NOTE #8	VJB	12/11/96
3	9/22/06	R.E.	REVISED NOTES AND DIMENSIONS	[illegible]	9/25/06

APPROVALS		
	INITIAL	DATE
DESIGN	JLS	1/30/67
ELEC.SERV.		
MECH.SERV.		
OPERATIONS		
FIELD SERV.		

REFERENCES: ORIGINAL SB-54 DRAWN 1/30/67
FILE I.D.: KAUAI/ENG/STD/DWG/SB-57.DGN
SCALE: AS SHOWN
DRAWN BY KER

EASTERN MUNICIPAL WATER DISTRICT

EASTERN MUNICIPAL WATER DISTRICT
RIVERSIDE COUNTY, CALIFORNIA

PRECAST REINFORCED CONCRETE 48". 60" & 72" ID FLAT TOP MANHOLE

APPROVED Doyle F. Boen DIRECTOR OF MAINTENANCE 1/67 DATE

SB-54

3

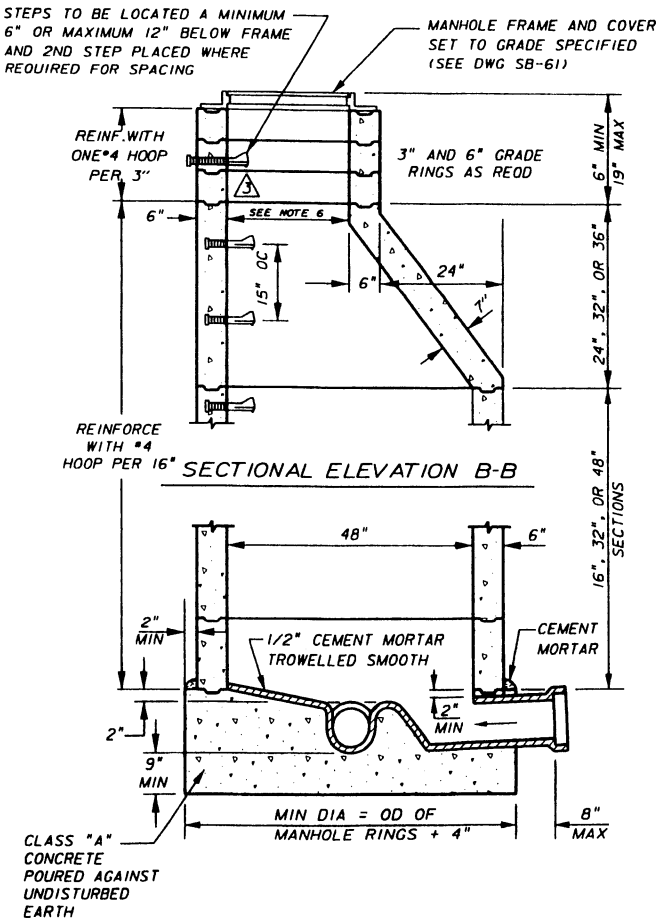

SECTIONAL ELEVATION B-B

SECTIONAL ELEVATION A-A

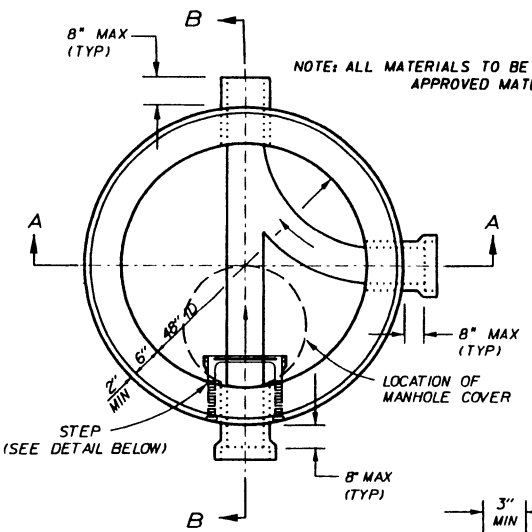

BASE PLAN

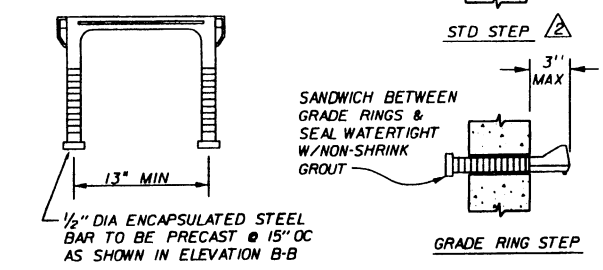

MANHOLE STEP DETAILS 4

NOTES

1. PRECAST NON-REINFORCED CONCRETE MANHOLES SHALL CONFORM TO THE APPLICABLE REQUIREMENTS OF ASTM AND:
   - A. SHALL BE DESIGNED FOR AASHO H-20 LOADING.
   - B. CONCRETE SHALL BE COMPACTLY VIBRATED, CENTRIFUGALLY SPUN, OR MECHANICALLY TAMPED.
   - C. ONE-PIECE CONE AND SHAFT WILL NOT BE ACCEPTED.
2. SEWER MAINS ARE TO BE LAID THRU THE MANHOLE WHERE POSSIBLE AND USED AS A FORM FOR THE INVERT. THE TOP 1/2 DIAMETER OF THE PIPE IS TO BE BROKEN OUT TO A NEAT LINE. BROKEN EDGES SHALL BE PLASTERED SMOOTH WITH CEMENT MORTAR.
3. CONCRETE BASE SHALL BE OF CLASS "A" CONCRETE AND PLACED IN ONE OPERATION. CONCRETE INVERTS SHALL BE TO GRADE AND ALIGNMENT AND FINISHED WITH A SMOOTH SURFACE. SPECIAL CARE SHALL BE USED IN FORMING ALL CHANNELS TO FACILITATE THE FLOW OF SEWAGE.
4. ALL MANHOLE TOPS SHALL BE INSTALLED WITH THE MANHOLE COVER OVER THE UPSTREAM INLET, EXCEPT AS OTHERWISE SPECIFIED.
5. SEE DRAWING SB-61 FOR DETAILS AND INSTALLATION OF MANHOLE COVER AND FRAME.
6. CONTRACTOR TO USE MANHOLES WITH A 24" CLEAR OPENING FOR SEWERS 24" DIA AND SMALLER AND 36" CLEAR OPENING FOR SEWERS LARGER THAN 24" DIA UNLESS OTHERWISE DIRECTED BY THE ENGINEER.
7. STANDARD 48" MANHOLE AS SHOWN HEREON TO BE INSTALLED WHEN DEPTH TO PIPE SHELF IS GREATER THAN 5' FROM FINISHED STREET GRADE.
8. MANHOLE STEPS SHALL BE EITHER CAST IN PLACE OR M.A. INDUSTRIES
2. STEEL REINFORCED COPOLYMER POLYPROPYLENE PLASTIC DRIVE-IN STEP INSTALLATION TO BE BY MANHOLE MANUFACTURER. ALL STEPS
3. ORIENTED 180° FROM MANHOLE OUTLET. GRADE RING STEPS SHALL BE
4. PLACED BETWEEN GRADE RINGS AND GROUTED IN PLACE. BOTTOM STEP SHALL BE CAST IN PLACE TO BE USED AS CLEANING HOOK AND SHALL BE PLACED 6" MIN AND 12" MAX FROM TOP OF SHELF.

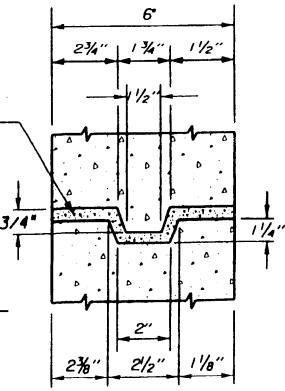

JOINT DETAIL

REVISIONS					
NO.	DATE	INITIAL	DESCRIPTION	APP'D	DATE
1	8/6/96	K.E.R.	REDRAWN W/CADD ON MYLAR	VJB	8/7/96
2	11/13/96	K.E.R.	REVISED STEP DETAIL AND NOTE 8	VJB	11/14/96
3	12/11/96	K.E.R.	REVISED STEP DETAIL AND NOTE 8	VJB	12/11/96
4	1/7/03	C.M.	REVISED NOTE 8, M.A. IND. DRIVE-IN STEP	VJB	10/15/03

APPROVALS		
	INITIAL	DATE
DESIGN	M.M	1/26/67
CONSTRUCTION		
INSPECTION		
OPERATIONS		
SUBMITTED	LM	

REFERENCES: ORIGINAL SB-56 DRAWN 1-26-67

FILE I.D.: \\niagra ap\eng\std dwgs\sb56.dgn

SCALE: NONE

DRAWN BY KER

EASTERN MUNICIPAL WATER DISTRICT

EASTERN MUNICIPAL WATER DISTRICT
STANDARD DRAWING

PRECAST NON-REINFORCED CONCRETE STANDARD 48" ID MANHOLE

APPROVED Doyle F. Boen, CHIEF ENGINEER 1/67 DATE

SB-56 4

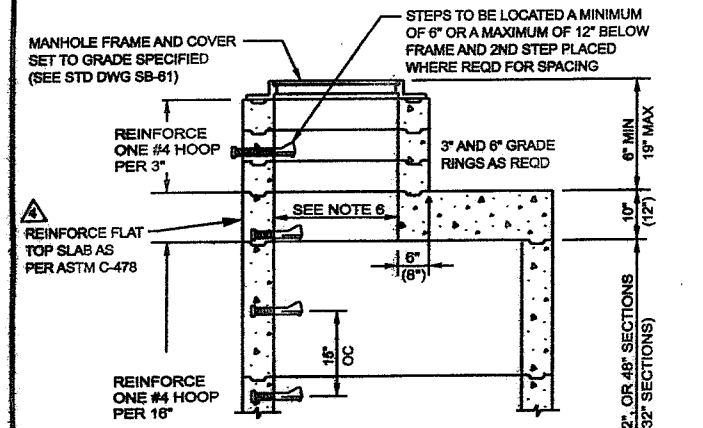

SECTIONAL ELEVATION B-B

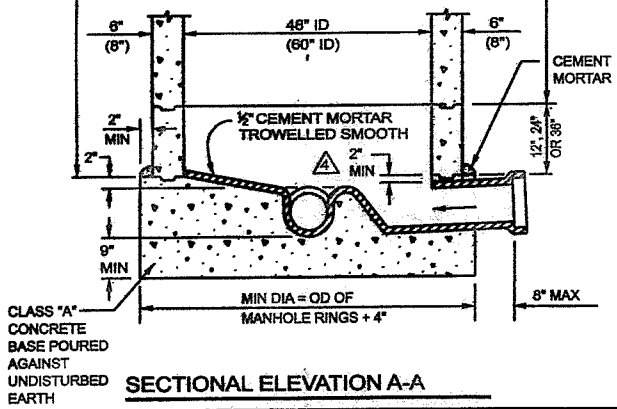

SECTIONAL ELEVATION A-A

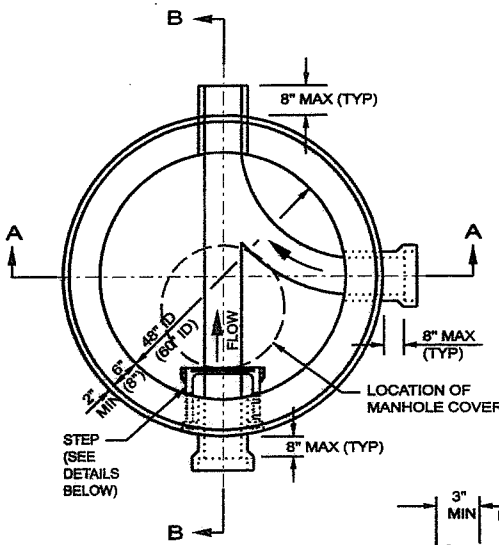

BASE PLAN

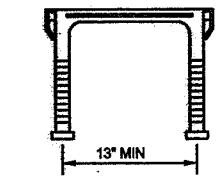

1/2" DIA ENCAPSULATED STEEL BAR TO BE PRECAST @ 15" OC AS SHOWN IN ELEVATION B-B

MANHOLE STEPS DETAILS 2

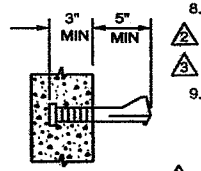

STANDARD STEP 2

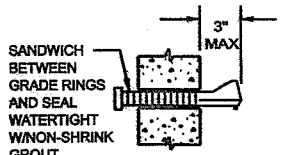

GRADE RING STEP

NOTES

1. PRECAST NON-REINFORCED CONCRETE MANHOLES SHALL CONFORM TO APPLICABLE REQUIREMENTS OF ASTM AND:
   A. SHALL BE DESIGNED FOR AASHO H-20 LOADING.
   B. CONCRETE SHALL BE COMPACTLY VIBRATED, CENTRIFUGALLY SPUN, OR MECHANICALLY TAMPED.
2. SEWER MAINS ARE TO BE LAID THRU THE MANHOLE WHERE POSSIBLE AND USED AS A FORM FOR THE INVERT. THE TOP 1/2 DIAMETER OF THE PIPE IS TO BE BROKEN OUT TO A NEAT LINE. BROKEN EDGES SHALL BE PLASTERED SMOOTH WITH CEMENT MORTAR.
3. CONCRETE BASE SHALL BE OF CLASS "A" CONCRETE AND PLACED IN ONE OPERATION. CONCRETE INVERTS SHALL BE TRUE TO GRADE AND ALIGNMENT AND FINISHED WITH A SMOOTH SURFACE. SPECIAL CARE SHALL BE USED IN FORMING ALL CHANNELS TO FACILITATE THE FLOW OF SEWAGE. 4
4. ALL MANHOLE TOPS SHALL BE INSTALLED WITH THE MANHOLE COVER OVER THE UPSTREAM INLET, EXCEPT AS OTHERWISE SPECIFIED.
5. SEE DWG SB-61 FOR DETAILS AND INSTALLATION OF MANHOLE COVER AND FRAME.
6. CONTRACTOR TO USE MANHOLES WITH A 24" CLEAR OPENING FOR SEWERS 24" DIA AND SMALLER AND 36" CLEAR OPENING FOR SEWERS LARGER THAN 24" UNLESS OTHERWISE DIRECTED BY THE ENGINEER.
7. STANDARD 48" MANHOLE AS SHOWN HEREON TO BE INSTALLED WHEN DEPTH TO PIPE SHELF IS GREATER THAN 5' FROM FINISHED STREET GRADE.
8. MANHOLE STEPS SHALL BE CAST IN PLACE AND ORIENTED 180^ FROM MANHOLE OUTLET. GRADE RING STEPS SHALL BE PLACED BETWEEN GRADE RINGS AND GROUTED IN PLACE. BOTTOM STEP TO BE USED AS CLEANING HOOK AND SHALL BE PLACED 6" MIN AND 12" MAX FROM TOP OF SHELF. 2 3
9. DIMENSIONS PERTAINING TO 60" ID REINFORCED MANHOLES SHOWN IN PARENTHESES (X").

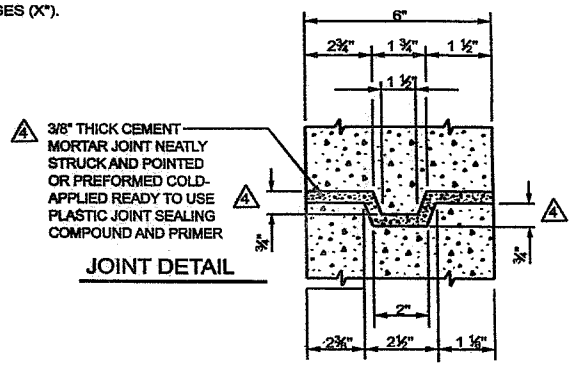

JOINT DETAIL

REVISIONS						APPROVALS		
NO.	DATE	INITIAL	DESCRIPTION	APP'D	DATE		INITIAL	DATE
1	8/6/96	K.E.R.	REDRAWN W/CADD ON MYLAR	VJB	8/6/96	DESIGN	J.E.D.	1/27/67
2	11/13/96	K.E.R.	REVISED STEP DETAIL AND NOTE 8	VJB	11/14/96	ELEC. SERV.		
3	12/11/96	K.E.R.	REVISED STEP DETAIL AND NOTE #8	VJB	12/11/96	MECH. SERV.		
4	9/22/06	R.E.	REVISED NOTE 3 AND JOINT DETAIL DIMENSIONS	DM	9/25/06	OPERATIONS		
						FIELD SERV.	L.M.	

REFERENCES: ORIGINAL SB-57 DRAWN 1-27-67
FILE I.D.: KAUAI/ENG/STD/DWG/SB-57.DGN

SCALE: AS SHOWN
DRAWN BY KER

EASTERN MUNICIPAL WATER DISTRICT

EASTERN MUNICIPAL WATER DISTRICT
RIVERSIDE COUNTY, CALIFORNIA

PRECAST NON-REINFORCED CONCRETE 48" & 60" I.D. FLAT TOP MANHOLE

APPROVED Doyle F. Boen DIRECTOR OF MAINTENANCE 1/67 DATE

SB-57

4

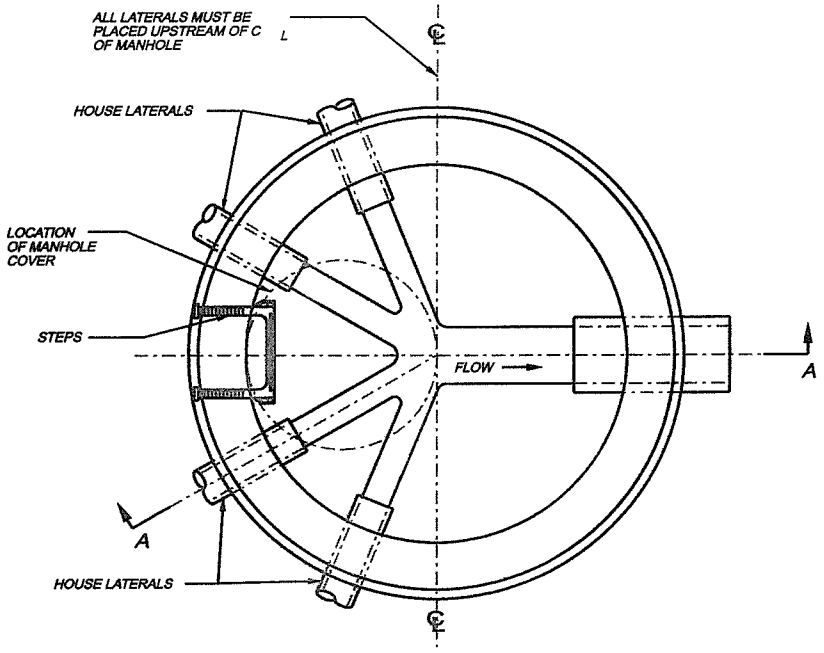

PLAN

TERMINUS MANHOLE WITH HOUSE LATERALS

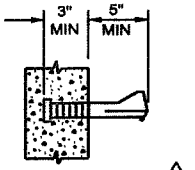

STANDARD STEP 1

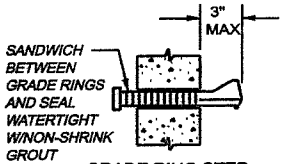

GRADE RING STEP

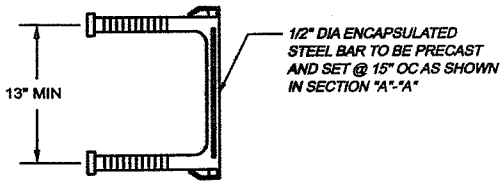

MANHOLE STEP DETAILS

NOTES

1. REFER TO STANDARD DRAWINGS OF MANHOLES FOR DETAILS PERTAINING TO MANHOLES ONLY.
2. THE TOP ONE-HALF DIAMETER OF THE PIPE IS TO BE BROKEN OUT TO A NEAT LINE. BROKEN EDGES SHALL BE PLASTERED SMOOTH WITH CEMENT MORTAR.
3. THE MAXIMUM NUMBER OF LATERALS INTO A TERMINUS MANHOLE SHALL BE LIMITED TO FOUR. 2

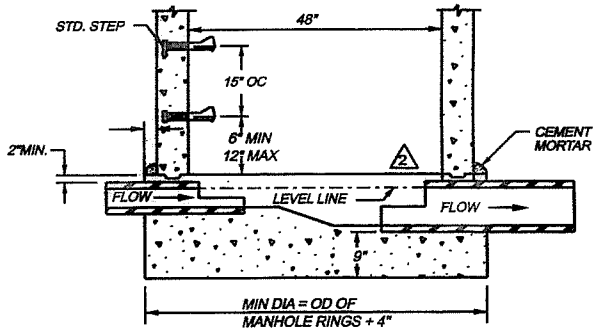

SECTION "A"-"A"

REVISIONS					
NO.	DATE	INITIAL	DESCRIPTION	APP'D	DATE
1	2/3/99	GR	REDRAWN W/CADD ON MYLAR	VJB	4/29/99
2	9/22/06	R.E.	REVISED #3 NOTE & LEVEL LINE DETAIL A-A	KM	9/26/06

APPROVALS		
	INITIAL	DATE
DESIGN	JVS	3/27/86
ELEC.SERV.	JEW	
MECH.SERV.		
OPERATIONS	DWH	
FIELD SERV.	LAM	5/13/86

EASTERN MUNICIPAL WATER DISTRICT

EASTERN MUNICIPAL WATER DISTRICT
RIVERSIDE COUNTY, CALIFORNIA

TERMINUS MANHOLE WITH LATERALS

REFERENCES: ORIG DRAWN 3/27/86
FILE I.D.: KAUAI/ENG/STD/DWG

SCALE: AS SHOWN
DRAWN BY: SKD

APPROVED James H. Bunts, Jr. May 15, 1986
DIRECTOR OF MAINTENANCE DATE

SB-58

2

sb58v7.dgn 9/25/2006 11:51:10 AM

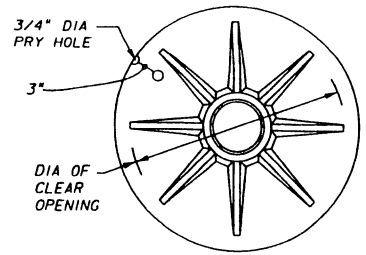

BOTTOM VIEW

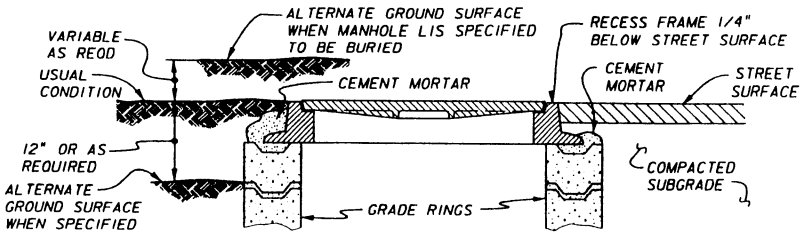

OPEN FIELD
REQUIRES LOCKING MANHOLE COVER (SEE DWG SB-8)

PAVED ROADWAY

NOTES

1. MANHOLE COVER SHALL BE DESIGNED FOR AASHO H-20 LOADING.
2. CAST IRON SHALL HAVE A MINIMUM TENSILE STRENGTH OF 3000 LBS PER SQUARE INCH.
3. MANHOLE COVER SHALL BE ALHAMBRA FOUNDRY CO TYPE A-1254 FOR 24" CLEAR OPENING OR A-1325 FOR 36" CLEAR OPENING WITH A TWO-PIECE COVER ASSEMBLY (OR APPROVED EQUAL).
4. MARKER POSTS SHALL BE INSTALLED TO MARK MANHOLE LOCATIONS IN UNIMPROVED AREAS.
5. CONTRACTOR TO USE MANHOLES WITH 24"CLEAR OPENING FOR SEWERS 24" DIA AND SMALLER AND 36" CLEAR OPENING FOR SEWERS LARGER THAN 24" DIA UNLESS OTHERWISE DIRECTED BY ENGINEER.
6. USE TWO-PIECE COVER ASSEMBLY FOR 36" CLEAR OPENING UNLESS OTHERWISE DIRECTED BY ENGINEER.
7. ONE-PIECE COVER SHOWN HERE IS FOR 24" CLEAR OPENING FOR 36" CLEAR OPENING REFER TO MANUFACTURER'S CATALOG.
8. USE TWO-PIECE SHALLOW MH COVER BY SOUTH BAY FOUNDRY SBF-1348 (OR APPROVED EQUAL) FOR SHALLOW MANHOLES PER SB-30.

3 2

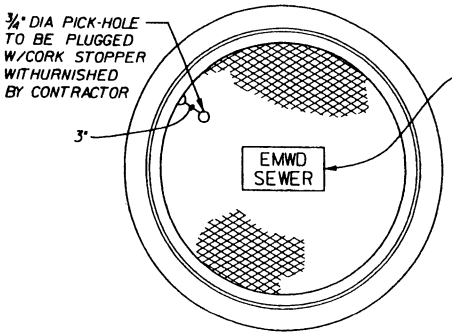

TOP VIEW

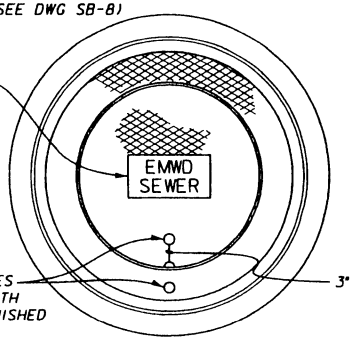

TOP VIEW
TWO-PIECE COVER

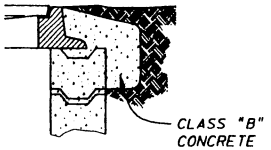

ROADWAY SHOULDER OR DIRT ROADWAY
USE AC APRON ON ALL UNIMPROVED ROADS (SEE STD DWG SA-47)

4

MANHOLE COVER & FRAME REQUIRED DIMENSIONS					
CLEAR OPENING	COVER O.D.	FRAME I.D.	FRAME HEIGHT	OVERALL BASE	TOTAL WEIGHT
24"	25-1/2"	25-3/4"	3-1/2"	32"	305 LBS.
36"	38"	38-1/4"	6"	44"	600 LBS.
36" TWO PIECE	38-1/8"	38-5/8"	6"	44"	850 LBS.
3 2 2-PC SHALLOW MH COVER	50½"	50¾"	4-1/2"	58"	1320 LBS.

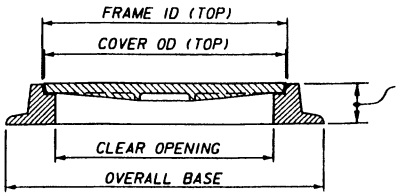

SECTION

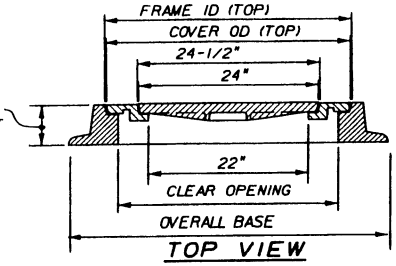

TOP VIEW

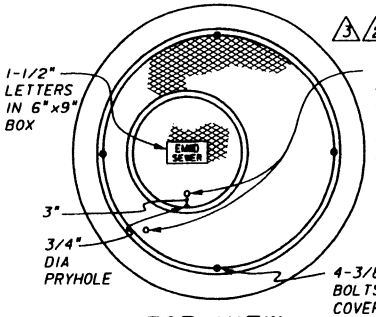

3 2 TWO-PIECE SHALLOW MH COVER

TOP VIEW

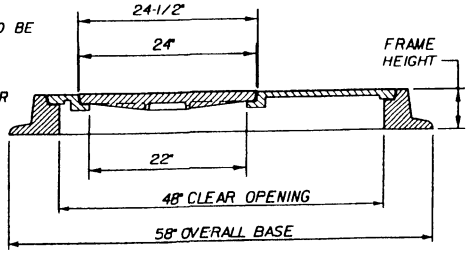

3 2 TWO-PIECE SHALLOW MH COVER

SECTION

REVISIONS					
NO.	DATE	INITIAL	DESCRIPTION	APP'D	DATE
1	10/19/95	KER	REDRAWN WITH CADD ON MYLAR	VJB	10/95
2	8/6/96	KER	ADDED 2-PC RECTANGULAR COVER	VJB	8/7/96
3	7/21/97	KER	REVISED SHALLOW MH COVER	VJB	10/28/97
4	1/9/03	C.M.	REVISE 24" COVER & FRAME I.D.	VJB	10/15/03

APPROVALS		
	INITIAL	DATE
DESIGN		
CONSTRUCTION		
INSPECTION		
OPERATIONS	LM	10/23/95
SUBMITTED	VJB	10/20/95

EASTERN MUNICIPAL WATER DISTRICT

EASTERN MUNICIPAL WATER DISTRICT
STANDARD DRAWING

MANHOLE COVER AND FRAME STANDARD & WATERTIGHT MANHOLES

REFERENCES:
FILE I.D.: \\nlagra ap\eng\std dwgs\sb61.dgn

SCALE: NONE
DRAWN BY K.E.R.

RECOMMENDED Joseph D. Van Sickle 10/20/95
DIRECTOR OF ENGINEERING DATE

APPROVED G. Hooite Rugge 10/20/95
CHIEF ENGINEER DATE

SB-61 4

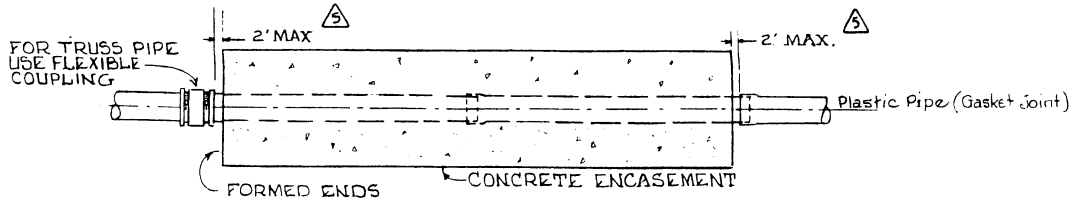

4 PLAN VIEW
PLASTIC PIPE

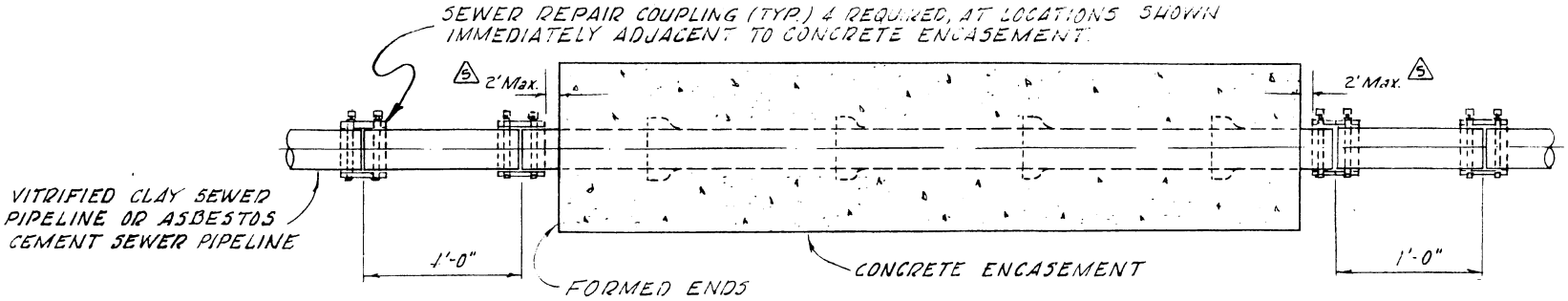

PLAN VIEW
V.C.P. OR A.C.P.

NOTES FOR V.C.P. OR A.C.P. :

1. NO CONNECTION ALLOWABLE AT BELL END OF V.C.P OR A.C.P; CUT BELL END OFF PIPE PRIOR TO MAKING CONNECTION.
2. SEWER REPAIR COUPLING SHALL BE REPAIR COUPLING WITH SHEAR RING AS MANUFACTURED BY MISSION CLAY PRODUCTS, OR APPROVED EQUAL, IN CONFORMANCE WITH THE REQUIREMENTS OF A.S.T.M.C 594 § 5.1.2.3. THE COMPRESSION BANDS AND CLIPS SHALL BE FABRICATED FROM STAINLESS STEEL AISI TYPE 316. AND THE BOLTS & NUTS FROM STAINLESS STEEL AISI TYPE 305, AND THE SHEAR RING FROM STAINLESS STEEL AISI TYPE 304.

REVISIONS					REFERENCES	SCALE	NONE	DATE
NO.	DATE	INITIAL	DESCRIPTION	APP'VD		DESIGNED	LAM	
1 & 2	10-29-70	H.S	GENERAL REVISIONS			DRAWN	H. S.	9-10-70
3	2-16-73	MoM	REVISED TO SAY "PLAN VIEW"			TRACED		
4	4-10-79	SBJ	Added Plastic Pipe			CHECKED		
5	2-2-93	CFW	REVISED DISTANCE BETWEEN FLEX CPLG. AND CONC. ENCASEMENT		APPROVALS	SUBMITTED		
					DESIGN / CONSTRUCTION / OPERATIONS	RECOMMENDED		

EASTERN MUNICIPAL WATER DISTRICT
RIVERSIDE COUNTY, CALIFORNIA

STANDARD DRAWING
SEWER CONNECTION AT CONC. ENCASM'T
V.C.P., A.C.P GRAVITY SEWER & PLASTIC GRAVITY SEWER

APPROVED GENERAL MANAGER & CHIEF ENGINEER

SD - 63 5

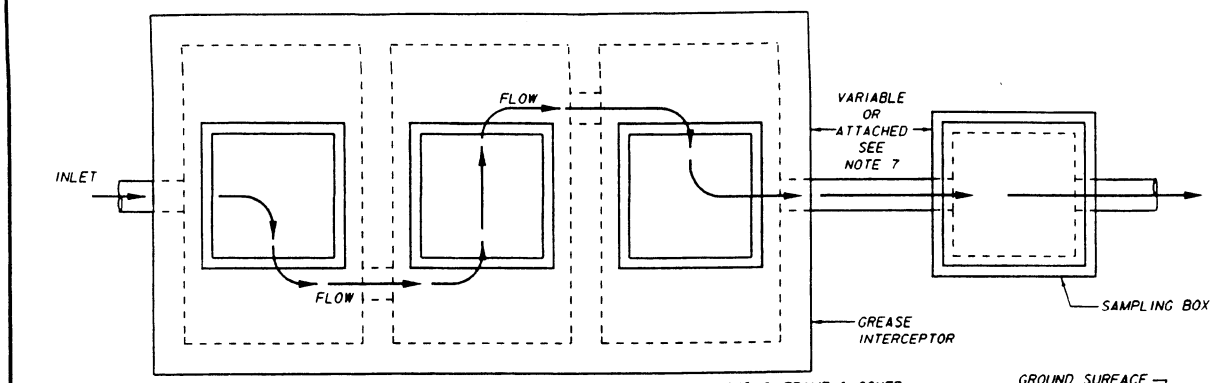

PLAN

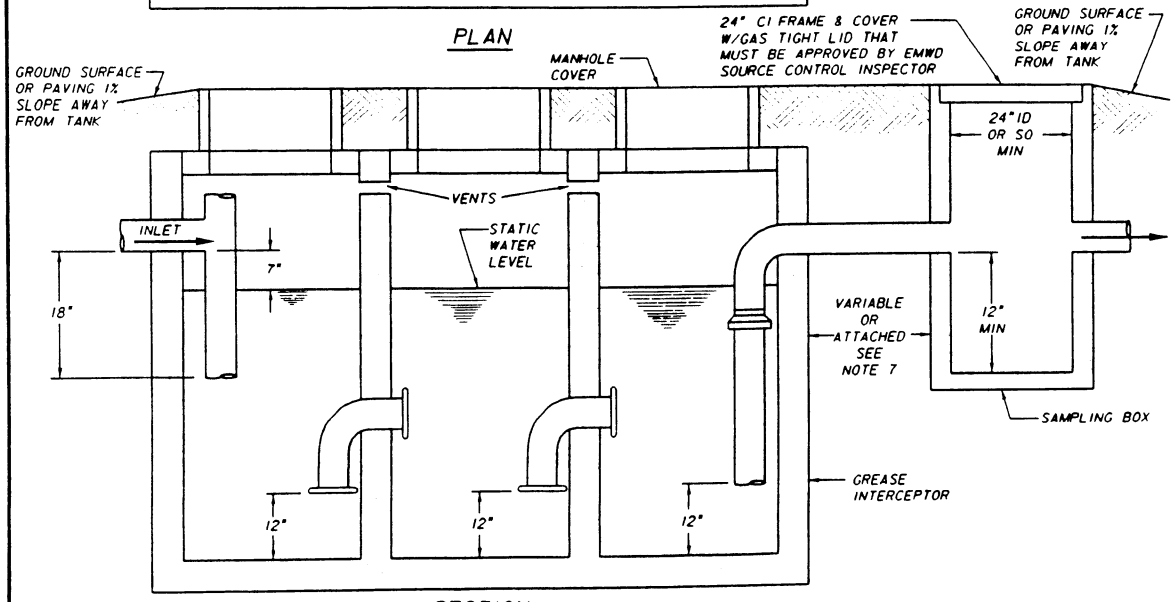

SECTION

NOTES

1. STRUCTURES SHALL BE INSTALLED TO ALLOW ACCESS FOR MAINTENANCE OR INSPECTION AT ALL TIMES.
2. WHERE SUBJECT TO VEHICLE LOADING, DESIGN ADEQUACY SHALL BE SUBSTANTIATED AND STRUCTURE SHALL BE PLACED ON SUITABLE BASE OF COMPACTED SOIL OR UNDISTURBED EARTH.
3. ALL SURFACE WATER MUST DRAIN AWAY FROM THE SAMPLING BOX AND INTERCEPTOR TO EXCLUDE RAIN WATER FROM THE SEWER SYSTEM.
4. FLOW TO THE SAMPLING BOX AND/OR INTERCEPTOR SHALL EXCLUDE ALL SANITARY SEWAGE AND SURFACE DRAINAGE.
5. EACH INSTALLATION IS SUBJECT TO REVIEW BY EMWD FOR ADEQUATE CAPACITY PRIOR TO CONSTRUCTION.
6. INSPECTION COVERS SHALL BE BROUGHT TO GRADE TO PERMIT VISUAL INSPECTION OF INTERNAL FITTINGS, WITH RISERS AS REQUIRED.
7. SAMPLING BOX SHALL BE A MINIMUM OF 24" ID OR 24" SQUARE. SAMPLING BOX MAY BE ATTACHED OR AT A VARIABLE DISTANCE FROM THE INTERCEPTOR AS APPROVED BY EMWD SOURCE CONTROL DIVISION.
8. EACH COMPARTMENT SHALL BE A MINIMUM OF 24" ID OR 24" SQUARE.
9. MINIMUM CAPACITY OF INTERCEPTOR IS 750 GALLONS.
10. TWO COMPARTMENT INTERCEPTOR IS ACCEPTABLE.
11. INSPECTION COVERS FOR GREASE INTERCEPTOR SHALL BE GAS TIGHT LID THAT MUST BE APPROVED BY EMWD SOURCE CONTROL INSPECTOR.
12. INTERCEPTORS REQUIRING MORE THAN 8 FEET OF GRADE RINGS MUST HAVE APPROVAL OF EMWD BEFORE INSTALLATION.

REVISIONS					APPROVALS		
NO.	DATE	INITIAL	DESCRIPTION	APP'D / DATE		INITIAL	DATE
1	12/19/99	GR	REDRAWN W/CADD & COMBINED W/SB-156	VJB 5/6/99	DESIGN	VJB	12/28/90
					CONSTRUCTION		
					INSPECTION		
					OPERATIONS	JAG	1/10/91
					SUBMITTED		

EASTERN MUNICIPAL WATER DISTRICT

EASTERN MUNICIPAL WATER DISTRICT

EASTERN MUNICIPAL WATER DISTRICT
STANDARD DRAWING

GREASE INTERCEPTOR WITH 24" SAMPLING BOX

REFERENCES: ORIG DRAWN 6/2/75 & SUPERCEDES SB-156 | SCALE: NONE

FILE I.D.: d_standards: sb70.dgn | DRAWN BY: MAG

RECOMMENDED _____ DIRECTOR OF ENGINEERING DATE

APPROVED Joseph D. Van Sickle DIRECTOR OF ENGINEERING 1/16/91 DATE

SB-70 1

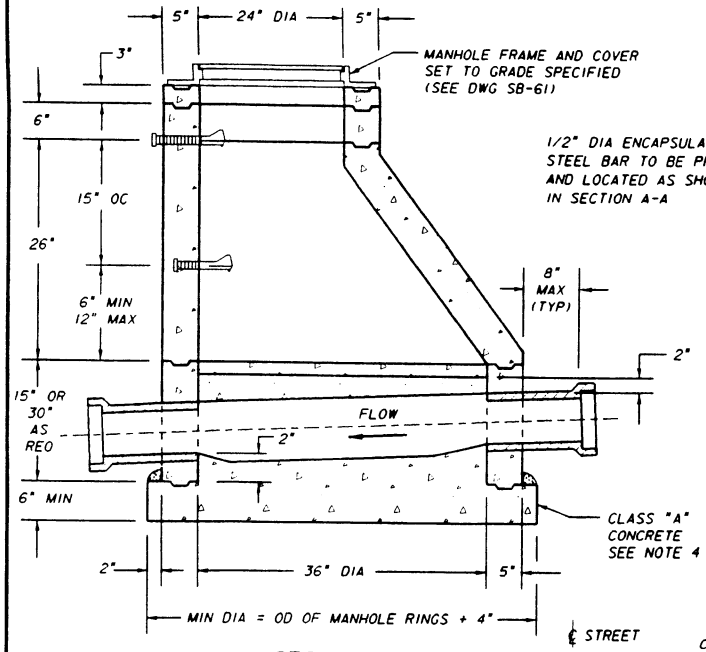

SECTION A-A

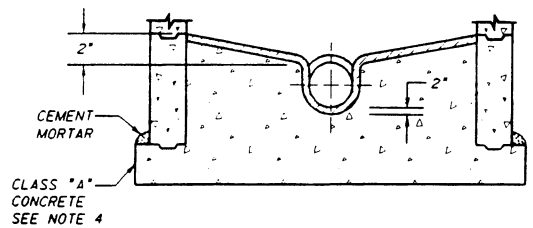

SECTION B-B

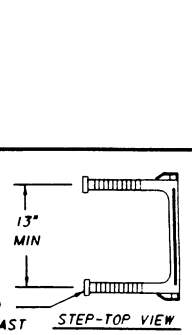

MANHOLE STEP DETAILS

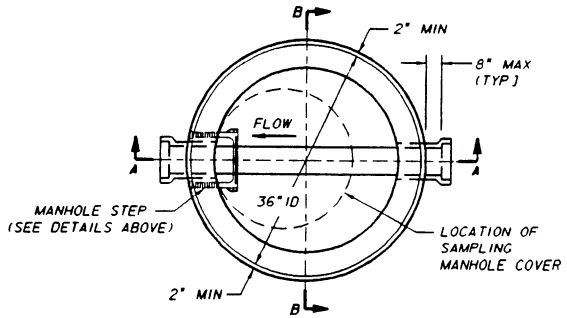

BASE PLAN

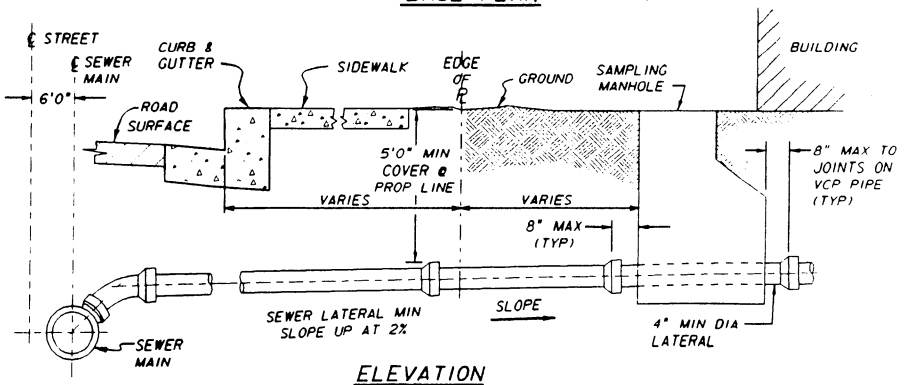

ELEVATION

NOTES

1. PRECAST REINFORCED CONCRETE MANHOLES AS SHOWN SHALL CONFORM TO APPLICABLE REQUIREMENTS OF ASTM C-478 & NON-REINFORCED PRECAST CONCRETE MANHOLES SHALL CONFORM TO APPLICABLE ASTM REQUIREMENTS. BOTH SHALL CONFORM TO:
   A. SHALL BE DESIGNED FOR AASHO H-20 LOADING.
   B. CONCRETE SHALL BE COMPACTLY VIBRATED, CENTRIFUGALLY SPUN, OR MECHANICALLY TAMPED.
2. MANHOLE TO BE INSTALLED ON BUILDING SEWER AND LOCATED SUCH THAT THE MANHOLE WILL BE ACCESSIBLE AT ALL TIMES.
3. WHERE NO BUILDING SET-BACK IS AVAILABLE, SET MANHOLE IN PARKWAY AREA; WHERE MANHOLE MUST BE SET IN CONCRETE WALK, PLUG PICK-HOLE FLUSH. LOCATE MANHOLE TO CLEAR OTHER UTILITIES.
4. CONCRETE BASE SHALL BE OF CLASS "A" CONCRETE & PLACED IN ONE OPERATION. CONCRETE INVERTS SHALL BE TRUE TO GRADE AND ALIGNMENT AND FINISHED WITH A SMOOTH SURFACE. SPECIAL CARE SHALL BE USED IN FORMING ALL CHANNELS TO FACILITATE THE FLOW OF SEWAGE.
5. ALL MANHOLE TOPS SHALL BE INSTALLED WITH THE MANHOLE COVER OVER THE DOWNSTREAM OUTLET, EXCEPT AS OTHERWISE SPECIFIED.
6. SEE DRAWING SB-61 FOR DETAILS AND INSTALLATION OF MANHOLE COVER AND FRAME.
7. GRADE RINGS SHALL BE 24"ID, EXCEPT AS OTHERWISE NOTED.
8. JOINTS SHALL BE 3/8" THICK CEMENT MORTAR NEATLY STRUCK AND POINTED; OR PREFORMED COLD APPLIED READY-TO-USE PLASTIC JOINT SEALING COMPOUND AND PRIMER AS SHOWN IN JOINT DETAIL HEREON.
9. MANHOLE STEPS SHALL BE CAST IN PLACE AND ORIENTATED 180 DEG FROM MANHOLE INLET. GRADE RING STEPS SHALL BE PLACED BETWEEN GRADE RINGS AND GROUTED IN PLACE. BOTTOM STEP TO BE USED AS A CLEANING HOOK AND SHALL BE PLACED BETWEEN 6" MIN AND 12" MAX FROM TOP SHELF.

REVISIONS				
NO.	DATE	INITIAL	DESCRIPTION	APP'D	DATE
1	2/16/99	GR	REDRAWN W/CADD ON MYLAR	VdB	4/29/99

APPROVALS		
	INITIAL	DATE
DESIGN	JVS	9/9/77
CONSTRUCTION	LAM	
INSPECTION		
OPERATIONS	WBP	
SUBMITTED	LAM	9.13.77

EASTERN MUNICIPAL WATER DISTRICT

EASTERN MUNICIPAL WATER DISTRICT

EASTERN MUNICIPAL WATER DISTRICT
STANDARD DRAWING

PRECAST REINFORCED CONCRETE 36" ID SAMPLING MANHOLE

REFERENCES: ORIGINAL SB-73 DRAWN 9/9/77
FILE I.D.: d_standards: sb73.dgn

SCALE: NONE
DRAWN BY: JMA

RECOMMENDED _____ DIRECTOR OF ENGINEERING DATE

APPROVED Doyle J. Boen 9/77 GENERAL MANAGER AND CHIEF ENGINEER DATE

SB-73 1

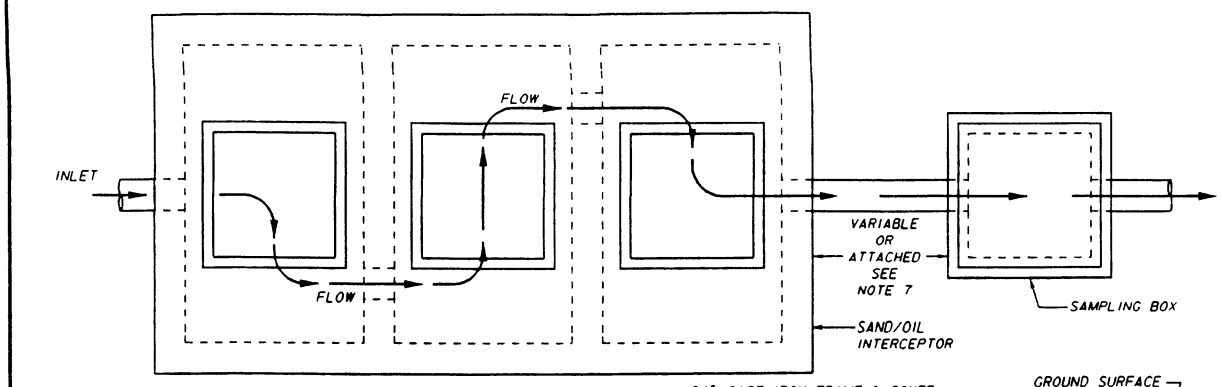

PLAN

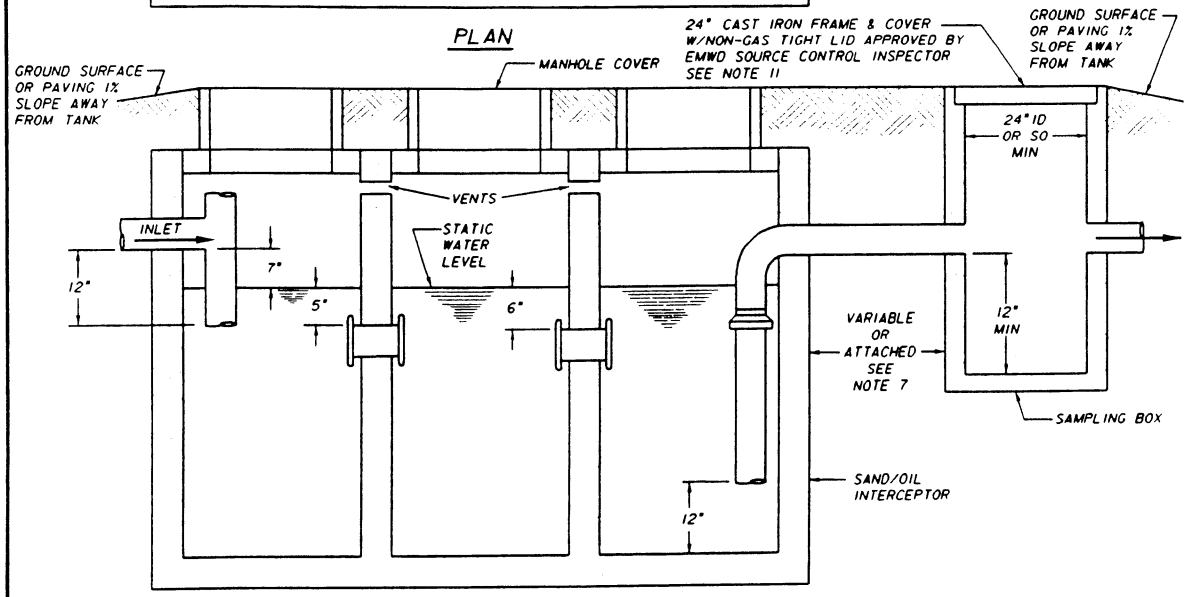

SECTION

NOTES

1. STRUCTURES SHALL BE INSTALLED TO ALLOW ACCESS FOR MAINTENANCE OR INSPECTION AT ALL TIMES.
2. WHERE SUBJECT TO VEHICLE LOADING, DESIGN ADEQUACY SHALL BE SUBSTANTIATED AND STRUCTURE SHALL BE PLACED ON SUITABLE BASE OF COMPACTED SOIL OR UNDISTURBED EARTH.
3. ALL SURFACE WATER MUST DRAIN AWAY FROM THE SAMPLING BOX AND INTERCEPTOR TO EXCLUDE RAIN WATER FROM THE SEWER SYSTEM.
4. FLOW TO THE SAMPLING BOX AND/OR INTERCEPTOR SHALL EXCLUDE ALL SANITARY SEWAGE AND SURFACE DRAINAGE.
5. EACH INSTALLATION IS SUBJECT TO REVIEW BY EMWD FOR ADEQUATE CAPACITY PRIOR TO CONSTRUCTION.
6. INSPECTION COVERS SHALL BE BROUGHT TO GRADE TO PERMIT VISUAL INSPECTION OF INTERNAL FITTINGS, WITH RISERS AS REQUIRED.
7. SAMPLING BOX SHALL BE A MINIMUM OF 24" ID OR 24" SQUARE. SAMPLING BOX MAY BE ATTACHED OR BE AT A VARIABLE DISTANCE FROM THE INTERCEPTOR AS APPROVED BY EMWD SOURCE CONTROL DIVISION.
8. EACH COMPARTMENT SHALL HAVE AN INSPECTION COVER WITH A MINIMUM DIMENSION OF 24".
9. MINIMUM CAPACITY OF INTERCEPTOR IS 750 GALLONS.
10. INTERCEPTORS REQUIRING MORE THAN 8 FEET OF GRADE RINGS MUST HAVE APPROVAL BY EMWD BEFORE INSTALLATION.
11. THE TYPE OF NON-GAS TIGHT OR OTHER TYPE LID MUST BE APPROVED BY EMWD SOURCE CONTROL DIVISION DEPENDING UPON THE LOCATION AND COST CONSIDERATION.

REVISIONS				
NO.	DATE	INITIAL	DESCRIPTION	APP'D	DATE
1	2/19/99	GR	REDRAWN W/CADD & COMBINED W/SB-156	MB	5/6/99

APPROVALS		
	INITIAL	DATE
DESIGN	VJG	12/28/90
CONSTRUCTION		
INSPECTION		
OPERATIONS	JAG	1/10/91
SUBMITTED		

EASTERN MUNICIPAL WATER DISTRICT

EASTERN MUNICIPAL WATER DISTRICT

EASTERN MUNICIPAL WATER DISTRICT
STANDARD DRAWING

SAND / OIL INTERCEPTOR WITH 24" SAMPLING BOX

REFERENCES: ORIG DRAWN 9/6/85 & SUPERCEDES SB-156 | SCALE: NONE

FILE I.D.: d_standards: sb75.dgn | DRAWN BY: MAG

RECOMMENDED _____ DIRECTOR OF ENGINEERING DATE

APPROVED Joseph D. Van Sickle DIRECTOR OF ENGINEERING 1/16/91 DATE

SB-75 1

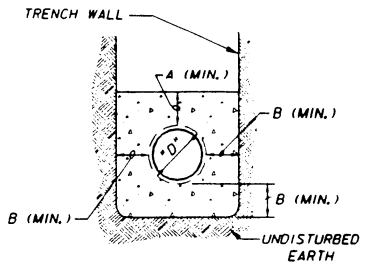

CONCRETE ENCASEMENT NO.1

PIPE I.D.	DIMENSIONS "A"	"B"
6"	5"	6"
8"	5"	6"
10"	5"	6"
12"	5"	6"
15"	5"	6"
18"	5"	6"
21"	6"	6"
24"	6"	6"
27"	7"	7"
30"	8"	8"
33"	9"	9"
36"	9"	9"
39"	10"	10"
42"	11"	11"

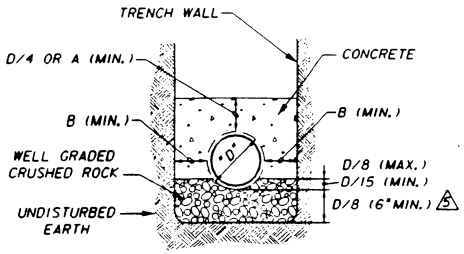

CONCRETE ENCASEMENT NO.2

NOTE: USE CONCRETE ENCASEMENT NO.2 UNLESS OTHERWISE INSTRUCTED BY THE ENGINEER, OR AS SHOWN ON THE CONTRACT DRAWINGS.

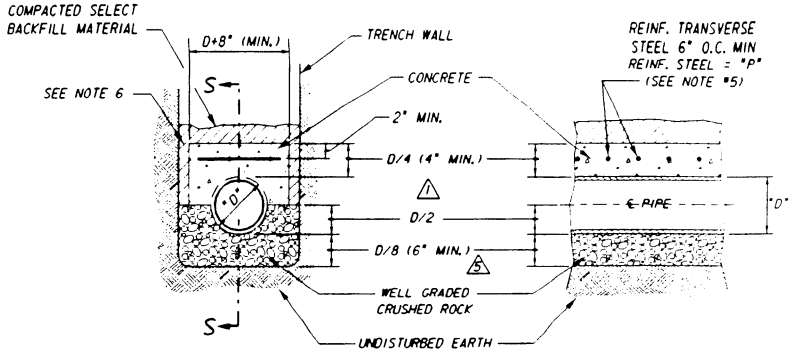

CLASS "AA"
REINFORCED CONCRETE ARCH

SECTION S-S

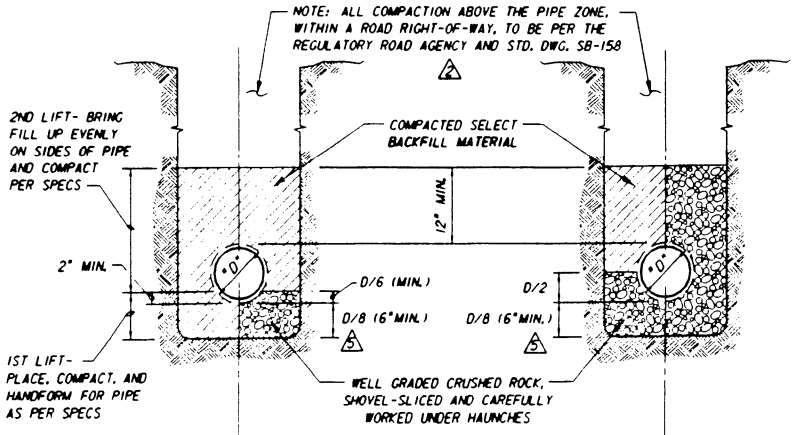

CLASS "D" | CLASS "C"
SELECT NATIVE MATERIAL | CRUSHED ROCK PAD

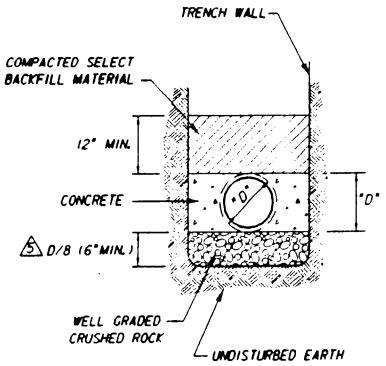

CLASS "B" | CLASS "BB"
CRUSHED ROCK BED | CRUSHED ROCK ENVELOPE

CLASS "A" 4
SIDE CRADLING

NOTES

1. CONCRETE ENCASEMENT AND ARCHES SHALL BE INSTALLED AS REQUIRED BY THE SPECIFICATIONS OR AS DIRECTED BY THE ENGINEER.
2. ALL CONCRETE SHALL BE CLASS "A" CONCRETE.
3. ALL CRUSHED ROCK SHALL MEET THE REQUIREMENTS OF ASTM C33, SIZE NO. 67.
4. TWO APPROVED FLEXIBLE JOINTS SHALL BE USED AT EACH END OF SEWER PIPE ENCASEMENTS PERSUANT TO STD. DWG. SB-63.
5. "P" = RATIO OF AREA OF STEEL TO AREA OF CONCRETE PER LINEAL FOOT (D/4 x 12" OR MIN. 4" x 12" = CONCRETE AREA). "P" SHALL BE AT A MIN. 0.4%, FOR CLASS "AA" BEDDING.
6. CONCRETE CAN BE POURED AGAINST TRENCH WALL OR MAY BE FORMED.
7. CONSOLIDATING BACKFILL MATERIAL BY WATER FLOODING NOT PERMITTED IN CLAY SOILS.

CRUSHED ROCK SIEVE ANALYSIS PER ASTM C33, SIZE NO. 67

100% PASSING	1"
90-100% PASSING	3/4"
20-55% PASSING	3/8"
0-10% PASSING	#4
0-5% PASSING	#8

NOTE: REFER TO STD. DWG SB-159 FOR BEDDING CLASSIFICATION

REVISIONS				
NO.	DATE	INITIAL	DESCRIPTION	APP'D	DATE
1	7/15/93	CFW	REVISED MIN. COVER OVER PIPE (CLASS AA)	VJR	7.22.93
2	1/31/95	KER	REVISED CALLOUT FOR TRENCH BACKFILL	VJR	1.31.95
3	2/19/97	KER	REDRAWN TO INCLUDE ALL PREVIOUS REVISIONS	VJR	2.28.97
4	11/4/98	KER	CLARIFY CLASS "A" CONCRETE SIDE CRADLING	VJR	11.4.98
5	6/4/99	KER	REVISE ROCK THICKNESS UNDER PIPE TO 6"	CB	6/4/99

APPROVALS	INITIAL	DATE
DESIGN		
CONSTRUCTION		
INSPECTION		
OPERATIONS		
SUBMITTED	VJR	3/1/93

EASTERN MUNICIPAL WATER DISTRICT

EASTERN MUNICIPAL WATER DISTRICT
STANDARD DRAWING

PIPE ZONE BEDDING FOR SEWER PIPE

REFERENCES: SUPERCEDES SB-76
FILE I.D.: d_standards/sb157.dgn
SCALE: NONE
DRAWN BY KER

RECOMMENDED Joseph D. Van Sickle 3/5/93
DIRECTOR OF ENGINEERING — DATE

APPROVED William E. Plummer 3/8/93
CHIEF ENGINEER — DATE

SB-157 5

UNSURFACED MEDIANS, ROADSIDE STRIPS, △ OR EASEMENTS

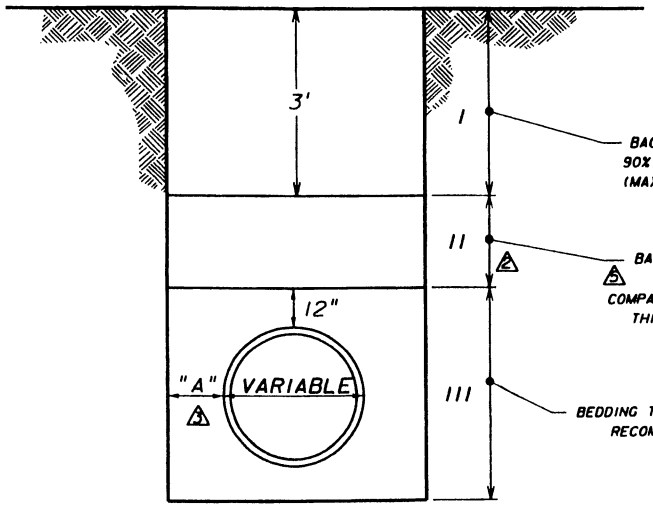

BACKFILL COMPACTED TO 90% RELATIVE COMPACTION (MAXIMUM LIFT THICKNESS △2 IS 6 INCHES).

BACKFILL COMPACTED △2 TO 90% RELATIVE COMPACTION. MAXIMUM LIFT △2 THICKNESS IS 2 FEET.

BEDDING TO BE PER MANUFACTURER'S RECOMMENDATIONS AND PER STD DWG SB-157. △1

UNSURFACED ROADWAYS, SURFACED STREETS OR SURFACED EASEMENTS

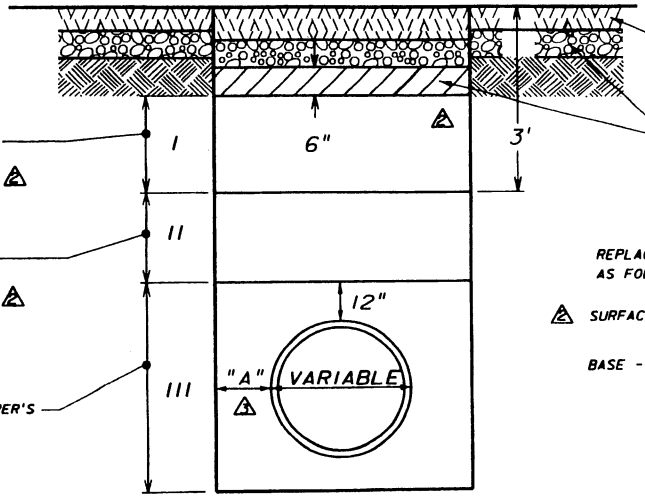

SURFACING (EXCLUDING GRAVEL ROADS)

BASE MATERIAL AND SUBGRADE, COMPACTED TO 95% RELATIVE COMPACTION. △2

REPLACE STRUCTURAL SECTION AS FOLLOWS:

△2 SURFACING - EXISTING THICKNESS PLUS 1" (IN) OR 3" (IN) MINIMUM.

BASE - SAME TYPE AND THICKNESS AS EXISTING BASE MATERIAL, 4" (IN) MIN △2 OR AS SPECIFIED.

NOTE: △2 WHEN A FIRM FOUNDATION IS NOT ENCOUNTERED, DUE TO SOFT, SPONGY, OR OTHER UNSUITABLE MATERIAL, SUCH MATERIAL SHALL BE REMOVED TO THE LIMITS DIRECTED BY THE ENGINEER, AND THE RESULTING EXCAVATION BACKFILLED WITH PIPE BEDDING MATERIAL COMPACTED TO 90% RELATIVE COMPACTION.

CLEARANCE "A" △3

1. CLAY PIPE: SEE STD. DWG. SB-159
2. PLASTIC PIPE: PIPE SIZES THROUGH 12"- "A"=6"-9"
   PIPE SIZES OVER 12"- "A"=1'-0" MIN.

I. STRUCTURAL ZONE
II. INTERMEDIATE ZONE
III. PIPE AND UTILITY ZONE

REVISIONS

NO.	DATE	INITIAL	DESCRIPTION	APP'D	DATE
△1	7/15/93	CFW	ADDED STD DWG NO TO ZONE C	VJB	7/22/93
△2	1/31/95	KER	ADDED PIPE TO TRENCH CLEARANCE REQ	VJB	2/3/95
△3	7/11/95	KER	REV'D TO COMPLY W/CURRENT GREEN BOOK	VJB	7/13/95
△4	2/19/97	KER	REV'D TO INCLUDE ALL PREVIOUS REVISIONS	VJB	7/28/97
△5	0/15/03	CM	REVISED COMPACTION REQUIREMENT	VJB	10/15/03

REFERENCES: SUPERCEDES SB-76

FILE I.D.: m:\graphics\visio\main\standard dwg\sb158.dgn

SCALE: NONE

DRAWN BY KER

APPROVALS

	INITIAL	DATE
DESIGN		
CONSTRUCTION		
INSPECTION		
OPERATIONS		
SUBMITTED	VJB	3/1/93

RECOMMENDED Joseph D. Van Sickle 3/5/93
DIRECTOR OF ENGINEERING DATE

EASTERN MUNICIPAL WATER DISTRICT

EASTERN MUNICIPAL WATER DISTRICT
STANDARD DRAWING

TRENCH BACKFILL FOR SEWER PIPE

APPROVED William E. Plummer 3/8/93
CHIEF ENGINEER DATE

SB-158 △5

THIS TABLE APPLIES TO HIGH STRENGTH VITRIFIED CLAY PIPE (VCP)

DEPTHS LISTED BELOW = DEPTH OF COVER (IN FEET) TO TOP OF PIPE

NARROW DITCH CONDITION ("Y")

Y= MAXIMUM EXCAVATED WIDTH	SEWER PIPE I.D.	CLASSIFICATION OF BEDDING ⚠1					
		A	D	C	B	BB	A
2'-6"	8"	0-4	4-12	12-17	17-50	*	*
2'-8"	10"	0-4	4-11	11-21	21-50	*	*
2'-9"	12"	0-4	4-10	10-19	19-50	*	*
3'-6"	15"	0-4	4-8	8-13	13-20	20-27	*
4'-0"	18"	0-4	4-8	8-13	13-18	18-25	*
4'-3"	21"	0-4	4-9	9-14	14-20	20-27	*
4'-6"	24"	0-4	4-10	10-15	15-23	23-30	*
4'-9"	27"	0-4	4-10	10-15	15-22	22-30	*
5'-0"	30"	0-4	4-10	10-15	15-22	22-29	29-50
5'-3"	33"	0-4	4-10	10-15	15-21	21-27	27-44
5'-6"	36"	0-4	4-10	10-15	15-22	22-28	28-45
6'-0"	39"	0-4	4-9	9-14	14-20	20-25	25-36
6'-3"	42"	0-4	4-10	10-15	15-20	20-25	25-36

WIDE TRENCH CONDITION ("X")

X= TRANSITION WIDTH	SEWER PIPE I.D.	CLASSIFICATION OF BEDDING						
		A	D	C	B	BB	A	AA
3'-2"	8"	0-4	4-12	12-17	17-19	19-21	21-23	23-50
3'-7"	10"	0-4	4-11	11-15	15-19	19-20	20-22	22-44
4'-0"	12"	0-4	4-10	10-14	14-17	17-19	19-20	20-33
4'-7"	15"	0-4	4-9	9-13	13-16	16-18	18-19	19-29
5'-1"	18"	0-4	4-9	9-13	13-16	16-18	18-19	19-29
5'-7"	21"	0-4	4-9	9-12	12-16	16-18	18-20	20-29
6'-4"	24"	0-4	4-9	9-12	12-16	16-18	18-19	19-27
6'-7"	27"	0-4	4-9	9-12	12-15	15-18	18-20	20-28
7'-1"	30"	0-4	4-8	8-12	12-15	15-17	17-19	19-26
7'-6"	33"	0-4	4-8	8-11	11-14	14-16	16-18	18-25
7'-11"	36"	0-4	4-8	8-11	11-14	14-16	16-19	19-25
8'-5"	39"	0-4	4-8	8-11	11-14	14-16	16-18	18-25
8'-10"	42"	0-4	4-8	8-10	10-13	13-15	15-18	18-24

INTERMEDIATE DITCH CONDITION ("Y")

Y=	SEWER PIPE I.D.	CLASSIFICATION OF BEDDING		
		BB	A	AA
2'-9"	8"	21-25	25-50	*
3'-0"	10"	19-27	27-50	*
3'-3"	12"	18-25	25-50	*
3'-9"	15"	16-21	21-37	37-50
4'-3"	18"	16-20	20-32	32-50
4'-6"	21"	18-23	23-37	37-50
5'-2"	24"	16-21	21-30	30-50
5'-5"	27"	17-21	21-30	30-50
5'-9"	30"	16-20	20-29	29-49
6'-2"	33"	15-19	19-27	27-42
6'-6"	36"	16-19	19-27	27-41
6'-11"	39"	15-19	19-26	26-38
7'-5"	42"	15-18	18-24	24-35

NOTE: FOR DEPTHS NOT LISTED ON INTERMEDIATE DITCH CONDITION SEE WIDE TRENCH CONDITION

VCP PIPE	EMWD CLASS	BEDDING MATERIAL	LOAD FACT.	1990 NCPI CLASS
	D	SELECT NATIVE MATERIAL	1.1	MOD. D
	C	CRUSHED ROCK PAD	1.5	C
	B	CRUSHED ROCK BED	1.9	B
	BB	CRUSHED ROCK ENVELOPE	2.2	-
	A	CONCRETE SIDE CRADLE	2.7	A-III
	AA	REINFORCED CONCRETE ARCH	3.4	A-II

NOTES

1. * - DEPTHS OF COVER GREATER THAN THOSE LISTED IN THE BEDDING CHARTS REQUIRE A SOILS INVESTIGATION AND ANALYSIS BY THE ENGINEER.
2. X - DENOTES TRANSITION WIDTH WHICH IS THE THE DISTANCE AT WHICH THE TRENCH WIDTH MAY BE INCREASED WITHOUT ADDING TO THE WEIGHT ON THE PIPE.
3. DETERMINATION OF BEDDING TYPES BASED ON CONSTANT TRENCH WIDTH, 1.25 FACTOR OF SAFETY, AND A SOIL WEIGHT - WET CLAY = 130 LBS/CUBIC FOOT PER NCPI MANUAL.
4. REFERENCE NCPI TRENCH DESIGN, HIGH STRENGTH, COMPUTER PROGRAM, VERSION 5.1 WR, COPYRIGHT 1989, GREGG G. GIESLER, AND STANDARD SPECIFICATIONS FOR PUBLIC WORKS CONSTRUCTION (GREEN BOOK) 1991 EDITION. TO EXECUTE TYPE NCPI THEN HS.
5. BEDDING CLASS SHALL EQUAL OR EXCEED THAT GIVEN IN THE APPLICABLE BEDDING TABLES.

THIS TABLE APPLIES TO PLASTIC PIPE

ABS SOLID WALL PIPE (SDR 35) & PVC SOLID WALL (SDR 35) 4" TO 15" DIA		ABS COMPOSITE PIPE (TRUSS) - 8" TO 15" DIA PVC COMPOSITE PIPE (TRUSS) - 8" TO 15" DIA ABS SOLID WALL (SDR 23.5) - 4" & 6" DIA	
DEPTH OF COVER TO TOP OF PIPE ⚠⚠	CLASSIFICATION OF BEDDING ⚠⚠	DEPTH OF COVER TO TOP OF PIPE	CLASSIFICATION OF BEDDING
⚠5 4' TO 20'	CLASS "BB"	LESS THAN 4'	ENCASEMENT NO. 2
GREATER THAN 20'	SPECIAL DESIGN *	4' TO 9'	CLASS "D"
		9' TO 20'	CLASS "B"
		20'-30'	ENCASEMENT NO. 2
		GREATER THAN 30'	SPECIAL DESIGN

⚠5 * SPECIAL DESIGN:
ENGINEER TO SUBMIT SPECIAL BEDDING FOR EMWD APPROVAL PRIOR TO START OF CONSTRUCTION.

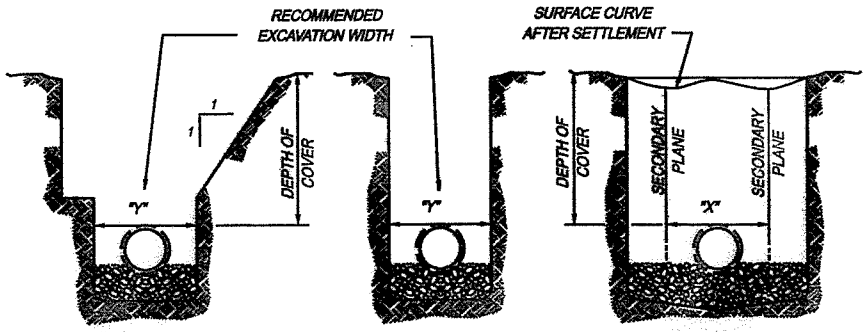

ALTERNATE DITCH CONDITION | DITCH CONDITION | WIDE TRENCH CONDITION

CONSTRUCTION EXCAVATION CONDITIONS

FOR BEDDING REQUIREMENTS REFER TO STD DWG SB-157

REVISIONS					
NO.	DATE	INITIAL	DESCRIPTION	APP'D	DATE
2	2/20/97	KER	REDRAWN TO INCLUDE ALL PREVIOUS REVISIONS	VJB	7/28/97
3	6/4/99	KER	REVISED BEDDING CLASS & DEPTHS FOR SDR 35	CB	6/4/99
4	1/6/00	GR	REVISED BEDDING CLASS & DEPTHS FOR SDR 35	VJB	1/26/00
5	6/2/00	KR	DEFINED SPECIAL DESIGN CRITERIA	VJB	6/2/00
6	9/22/06	R.E.	REVISED TABLE	[illegible]	9/25/06

REFERENCES: SUPERCEDES SB-76
FILE I.D.: KAUAI/ENGINEERING/STDDWG

SCALE: AS SHOWN
DRAWN BY KER

APPROVALS		
	INITIAL	DATE
DESIGN		
ELEC. SERV.		
MECH. SERV.		
OPERATIONS		
FIELD SERV.	VJB	3/1/93

RECOMMENDED Joseph D. Van Sickle, DIRECTOR OF ENGINEERING 3/3/93 DATE

EASTERN MUNICIPAL WATER DISTRICT

EASTERN MUNICIPAL WATER DISTRICT
RIVERSIDE COUNTY, CALIFORNIA

CLASSIFICATION OF PIPE ZONE BEDDING FOR SEWER PIPE

APPROVED William E. Plummer, DIRECTOR OF MAINTENANCE 3/8/93 DATE

SB-159

6

sb159.dgn 9/22/2006 2:32:46 PM

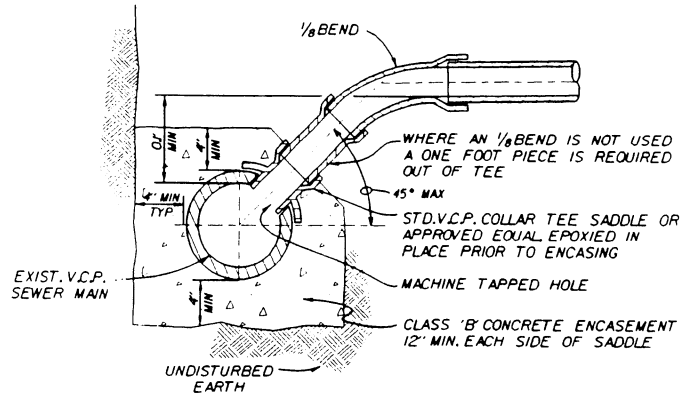

V.C.P.
SADDLE CONNECTION

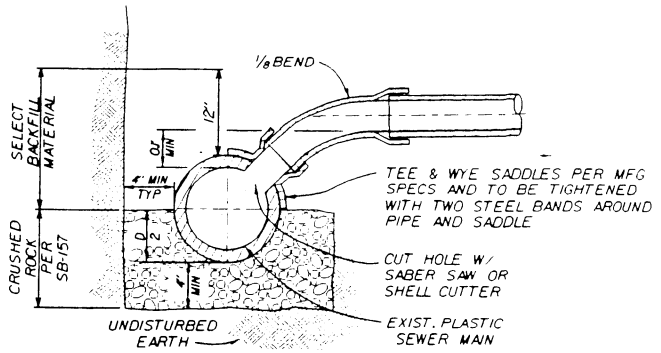

PLASTIC PIPE
SADDLE CONNECTION

REVISIONS					
NO.	DATE	INITIAL	DESCRIPTION	APP'D	DATE

APPROVALS		
	INITIAL	DATE
DESIGN		
CONSTRUCTION		
INSPECTION	JEW	4/24/97
OPERATIONS		
SUBMITTED	VJB	4/23/97

REFERENCES: SUPERCEDES SA-44, SA-86 | SCALE: NONE
FILE I.D.: /USR/KARL/STNDRDS/SB176.DGN | DRAWN BY KER

EASTERN MUNICIPAL WATER DISTRICT
STANDARD DRAWING

SEWER LATERAL CONNECTIONS

APPROVED _____ ASST. GENERAL MANAGER ENGINEERING 4/25/97 DATE

SB-176

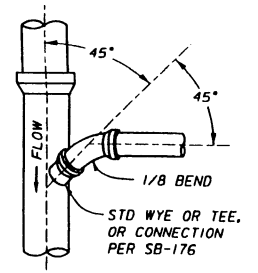

PLAN (TYP)
NOT TO SCALE

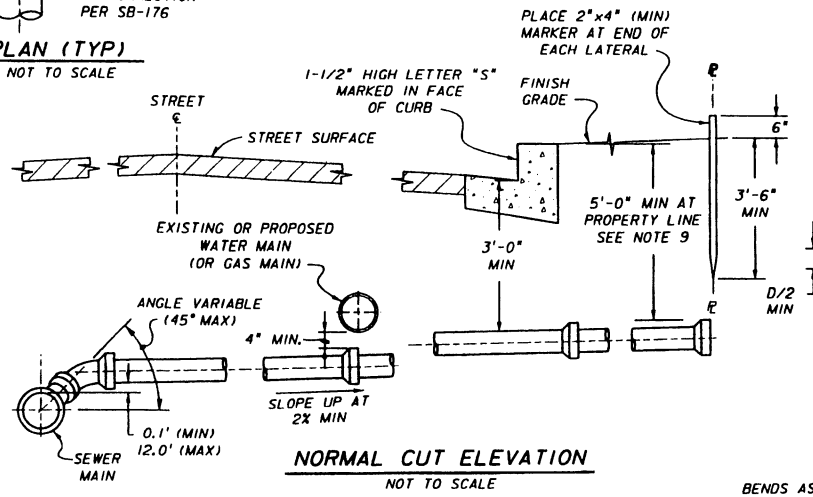

NORMAL CUT ELEVATION
NOT TO SCALE

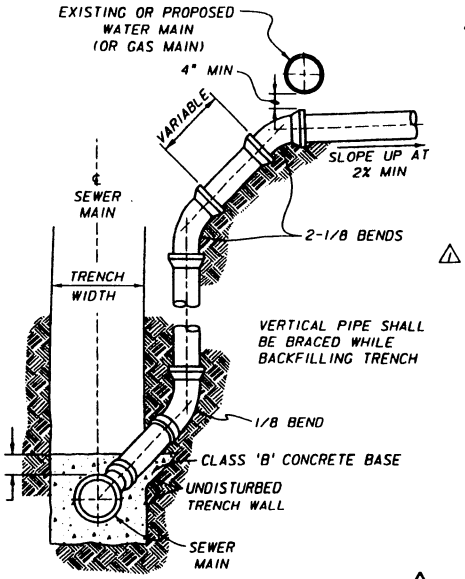

ALTERNATE ELEVATION 'C'
NOT TO SCALE

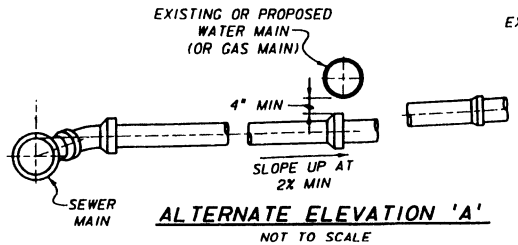

ALTERNATE ELEVATION 'A'
NOT TO SCALE

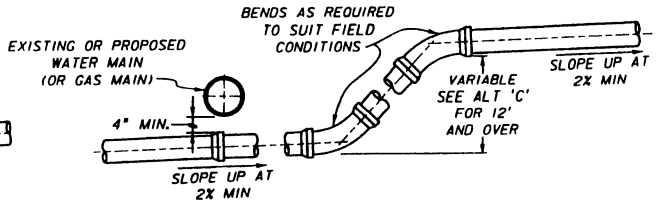

ALTERNATE ELEVATION 'B'
NOT TO SCALE

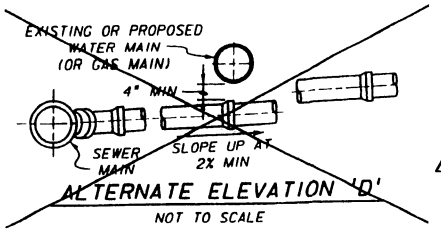

ALTERNATE ELEVATION 'D'
NOT TO SCALE

NOTES

1. SEWER LATERALS SHALL HAVE A MINIMUM SLOPE OF 2% EXCEPT AS OTHERWISE NOTED ON THE PLANS.
2. PLUGS SHALL BE CEMENTED IN WITH CEMENT MORTAR, OR SHALL BE NEOPRENE STOPPER OR APPROVED EQUAL.
3. IN NO CASE SHALL A LATERAL CONNECT TO THE SEWER MAIN DIRECTLY ON TOP OF THE PIPE.
4. 2" WIDE METALLIC DETECTABLE LOCATOR TAPE SHALL BE PLACED APPROXIMATELY 6" ABOVE EACH LATERAL, BUT NOT GREATER THAN 6' DEEP, UNLESS OTHERWISE DIRECTED BY THE ENGINEER.
5. MINIMUM 5' SEPARATION BETWEEN SEWER LATERAL AND WATER SERVICE.
6. WHERE SEWER LATERAL CROSSES ABOVE AN EXISTING OR PROPOSED WATER MAIN, USE CI PIPE (CL 150 W/HOT DIP BITUMINOUS COATING) 10' ON EACH SIDE OF WATER MAIN. USE COUPLERS PER SB-178.
7. LATERALS SHALL END AT THE PROPERTY LINE UNLESS OTHERWISE NOTED ON THE PLANS.
8. SEE STANDARD DRAWING SB-178 FOR CONNECTION TO BUILDING SEWER.
9. WHERE JOINT UTILITY TRENCH IS PROPOSED BEHIND CURB, SEWER LATERAL SHALL HAVE 5'-0" COVER BELOW CURB GRADE AT PROPERTY LINE. TYPICAL OF ALL ALTERNATE ELEVATIONS.
10. ALTERNATE ELEVATIONS ARE TO BE CONSTRUCTED WHEN THE FOLLOWING CONDITIONS APPLY:
    - ALTERNATE 'A': TO BE CONSTRUCTED WHEN VERTICAL DIFFERENCE BETWEEN WATER AND SEWER MAINS DOES NOT ACCOMMODATE NORMAL CUT ELEVATION.
    - ALTERNATE 'B': TO BE CONSTRUCTED WHEN A VERTICAL TRANSITION LESS THAN 12' IS REQUIRED BETWEEN THE WATER CROSSING AND PROPERTY LINE.
    - ALTERNATE 'C': TO BE CONSTRUCTED WHEN A VERTICAL TRANSITION 12' OR GREATER IS REQUIRED BETWEEN SEWER MAIN AND WATER CROSSING.
    - ALTERNATE 'D': TO BE CONSTRUCTED WHEN ALTERNATE 'A' DOES NOT PROVIDE REQUIRED CLEARANCE AND ALL OTHER OPTIONS HAVE BEEN EXHAUSTED.
11. ALTERNATE ELEVATION "D" NOT TO BE USED AS OF 6/03.

REVISIONS					
NO.	DATE	INITIAL	DESCRIPTION	APP'D	DATE
1	4/19/99	GR	REV NOTE 8 & ID-/USR/KARL/STNORDS/177B.DGN	VJB	5/4/99
2	9/16/03	CM	ADD NOTE "11, ALT "D" NOT TO BE USED	VJB	10/15/03

APPROVALS		
	INITIAL	DATE
DESIGN	VJB	4/23/97
CONSTRUCTION		
INSPECTION		
OPERATIONS		
SUBMITTED	VJB	4/23/97

REFERENCES: SUPERCEDES SB-48, SB-50, & SB-51
FILE I.D.: \\niagra opl\eng\std dwgs\sb177.dgn

SCALE: NONE
DRAWN BY KER

EASTERN MUNICIPAL WATER DISTRICT

EASTERN MUNICIPAL WATER DISTRICT
STANDARD DRAWING

SEWER LATERALS

APPROVED Charles J. Bachmann 4/25/97
ASST. GENERAL MANAGER ENGINEERING DATE

SB-177 2

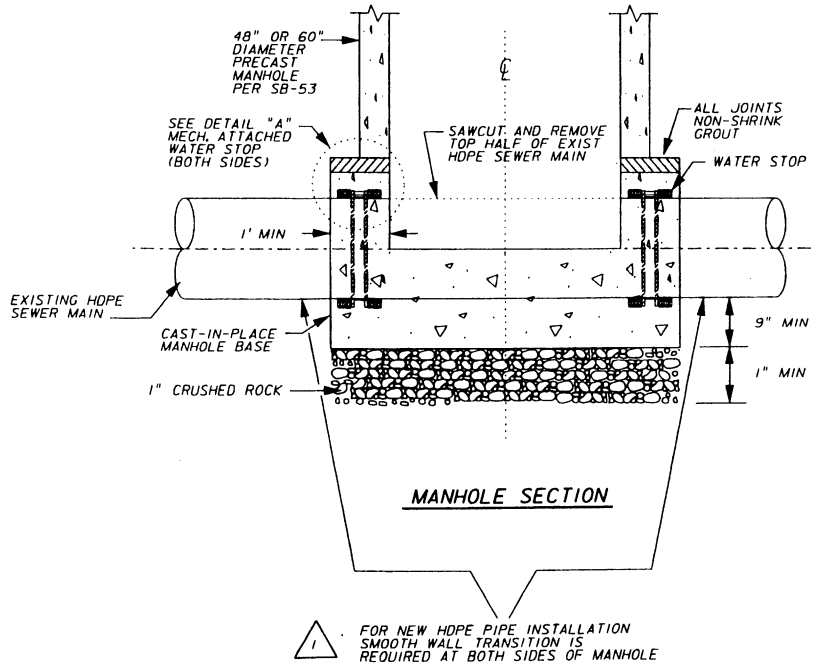

MANHOLE SECTION

1. FOR NEW HDPE PIPE INSTALLATION SMOOTH WALL TRANSITION IS REQUIRED AT BOTH SIDES OF MANHOLE

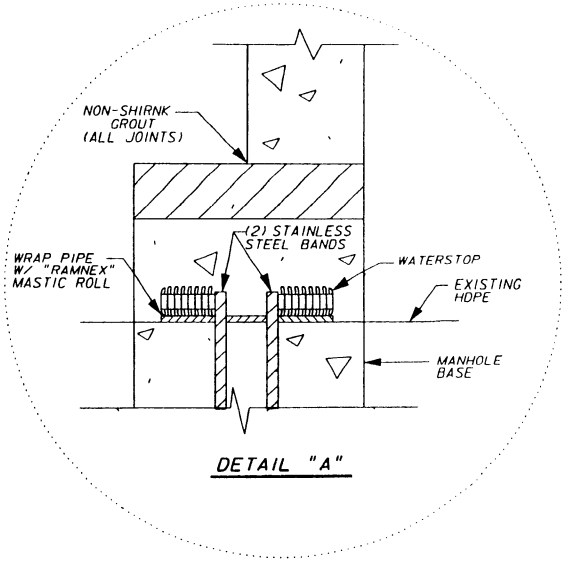

DETAIL "A"

NOTES

1. PVC WATERSTOP GREENSTREAK STYLE SERRATED #783 OR #679 OR APPROVED EQUAL. BUTT JOINT OF PVC WATERSTOP TO BE PVC GLUED
2. ALL CEMENT MORTAR FOR PRE-CAST JOINTS TO BE SIKA GROUT 212 NON-SHRINK OR APPROVED EQUAL.

REVISIONS					
NO.	DATE	INITIAL	DESCRIPTION	APP'D	DATE
1	9/10/03	CM	ADD REQUIREMENT FOR NEW PIPE	WB	10/15/03

APPROVALS		
	INITIAL	DATE
DESIGN	WJB	2/29/00
CONSTRUCTION		
INSPECTION	JEW	3/1/2000
OPERATIONS		
SUBMITTED		

EASTERN MUNICIPAL WATER DISTRICT

EASTERN MUNICIPAL WATER DISTRICT
STANDARD DRAWING

48" AND 60" DIAMETER MANHOLE INSTALLATION FOR HDPE SEWER MAIN

REFERENCES:
FILE I.D.: \\niagra ap\eng\std drgs\sb-179.dgn

SCALE: NONE
DRAWN BY KER/GR 8/31/99

APPROVED Charles J. Bachmann 3/1/2000
ASST. GENERAL MANAGER, ENGINEERING DATE

SB-179

1