CALLEGUAS MUNICIPAL WATER DISTRICT

T H O U S A N D O A K S, C A L I F O R N I A

CALLEGUAS
MUNICIPAL WATER DISTRICT

SALINITY MANAGEMENT PIPELINE, PHASE 2A

SPECIFICATIONS NO. 470

BOARD OF DIRECTORS

TED GRANDSEN, PRESIDENT
WILLIAM R. SEAVER, VICE PRESIDENT
DONALD G. HAUSER, SECRETARY
GAIL L. PRINGLE, TREASURER
SCOTT H. QUADY, DIRECTOR

* * * * * * * *

SUSAN B. MULLIGAN, GENERAL MANAGER
KRISTINE McCAFFREY, MANAGER OF ENGINEERING
ROBERT E. BEAMER, SENIOR PROJECT MANAGER

P E R L I T E R & I N G A L S B E
C O N S U L T I N G E N G I N E E R S
A L T A D E N A, C A L I F O R N I A

60% SUBMITTAL
DECEMBER 22, 2010

REGISTERED PROFESSIONAL ENGINEER
REAN DAVID KUNITAKE
C-54285
Exp. 12-31-11
CIVIL
STATE OF CALIFORNIA

INDEX TO DRAWINGS

SHT. NO.	TITLE
1	COVER SHEET
2	LOCATION MAP, VICINITY MAP, DISCHARGE POINT AND INDEX TO DRAWINGS
3	GENERAL AND STRUCTURAL NOTES
4	ABBREVIATIONS, SYMBOLS LEGEND AND SURVEY CONTROL POINTS
5	KEY PLAN AND PROFILE STA 1+00 TO STA 91+00
6	KEY PLAN AND PROFILE STA 91+00 TO STA 123+00
7	PLAN AND PROFILE STA 1+00.00 TO 12+00.00
8	PLAN AND PROFILE STA 12+00.00 TO 24+00.00
9	PLAN AND PROFILE STA 24+00.00 TO 36+00.00
10	PLAN AND PROFILE STA 36+00.00 TO 48+00.00
11	PLAN AND PROFILE STA 48+00.00 TO 60+00.00
12	PLAN AND PROFILE STA 60+00.00 TO 72+00.00
13	PLAN AND PROFILE STA 72+00.00 TO 84+00.00
14	PLAN AND PROFILE STA 84+00.00 TO 96+00.00
15	PLAN AND PROFILE STA 96+00.00 TO 108+00.00
16	PLAN AND PROFILE STA 108+00.00 TO 120+00.00
17	PLAN AND PROFILE STA 120+00.00 TO 123+00
18	TRENCH SECTION
19	CONNECTION DETAIL AND 72-IN SOMIS DRAIN SECTION
20	PIPE STRINGING LAYOUT
21	MISCELLANEOUS DETAILS I
22	CASING DETAIL AND CONCRETE CRADLE SECTION
23	BLOW-OFF DETAILS
24	MISCELLANEOUS DETAILS II
25	CALLEGUAS CREEK CROSSING PLAN AND PROFILE
26	PHOTO PLANS STA 1+00.00 TO STA 36+00.00
27	PHOTO PLANS STA 36+00.00 TO STA 69+00.00
28	PHOTO PLANS STA 69+00.00 TO STA 105+00.00
29	PHOTO PLANS STA 105+00.00 TO STA 123+00
30	STREET STRIPING PLANS STA 1+00.00 TO STA 36+00.00
31	STREET STRIPING PLANS STA 36+00.00 TO STA 69+00.00
32	STREET STRIPING PLANS STA 69+00 TO STA 105+00
33	STREET STRIPING PLANS STA 105+00 TO STA 123+00
34	TEMPORARY TRAFFIC CONTROL NOTES
35	SIGN, STRIPING AND CONTROLS LEGEND
36	TEMPORARY TRAFFIC CONTROL LAYOUT PLAN STA 1+00 TO STA 36+00
37	PLAN AND PROFILE STA 36+00 TO STA 69+00
38	TEMPORARY TRAFFIC CONTROL LAYOUT PLAN STA 69+00 TO STA 105+00
39	TEMPORARY TRAFFIC CONTROL LAYOUT PLAN STA 105+00 TO STA 123+00
40	TEMPORARY TRAFFIC CONTROL PIPE STA 1+00 TO STA 39+70
41	TEMPORARY TRAFFIC CONTROL PIPE STA 39+70 TO STA 41+40 AND TYPICAL TRAFFIC CONTROL SETUP
42	TEMPORARY TRAFFIC CONTROL PIPE STA 83+00 TO STA 84+00
43	TEMPORARY TRAFFIC CONTROL PIPE STA 94+40 TO STA 95+20
44	TEMPORARY TRAFFIC CONTROL PIPE STA 97+50 TO STA 99+40
45	TEMPORARY TRAFFIC CONTROL PIPE STA 109+00 TO STA 109+41.00
46	TEMPORARY TRAFFIC CONTROL PIPE STA 109+41.00 TO STA 110+00
47	TEMPORARY TRAFFIC CONTROL PIPE STA 112+00 TO STA 112+80 AND STA 118+80 TO STA 119+50
48	TEMPORARY TRAFFIC CONTROL PIPE STA 119+50 TO STA 123+00

UTILITY COMPANY CONTACTS

UTILITY COMPANY	PHONE NUMBER
AT&T Long Distance	(909) 776-3914
Ocean View M.W.D.	(805) 485-7965
Port Hueneme Water Agency	(805) 986-6566
Southern California Edison	(800) 422-4133
Southern California Gas Dist.	(818) 701-3262
Southern California Gas Trans.	(818) 701-4546
Southern California Gas	(800) 548-6841
Time Warner	(805) 477-4439
Underground Service Alert	(800) 422-4133
Ventura County D.P.W.	(805) 654-2068
Verizon Communications	(805) 388-2228

NOTE: There may be additional utility companies in the vicinity. Contractor is required to contact all utility owners when necessary whether shown on this list or not.

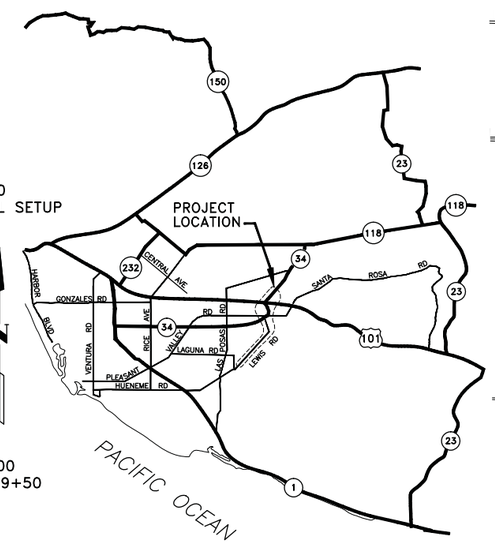

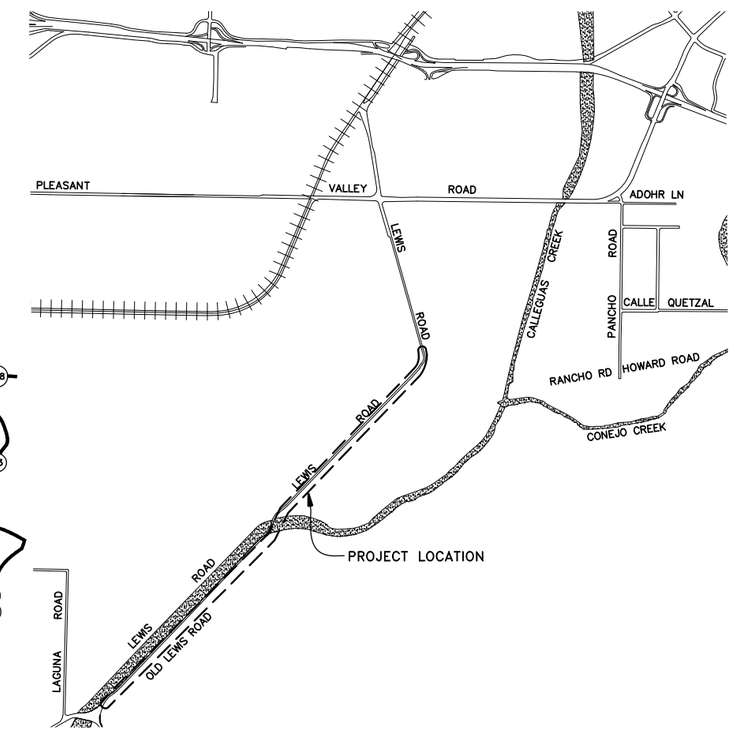

REVISIONS		
MARK	DATE	DESCRIPTION

DRAFT
NOT FOR CONSTRUCTION
DATE: DECEMBER 15, 2010

REGISTERED PROFESSIONAL ENGINEER
REAN DAVID KUNTAMER
C-54285
Exp. 12-31-11
CIVIL
STATE OF CALIFORNIA

CAUTION
0 1"
THIS DRAWING IS TO SCALE ONLY IF BAR MEASURES 1 INCH

PERLITER & INGALSBE
CONSULTING ENGINEERS
ALTADENA, CALIFORNIA

SUBMITTED: FOR THE CONSULTING ENGINEERS R.C.E. NO. 54285
REVIEWED: MANAGER OF ENGINEERING, CALLEGUAS MUNICIPAL WATER DISTRICT
DESIGNED: R.Y.K. DRAWN: V.T. CHECKED: R.Y.K.

CALLEGUAS MUNICIPAL WATER DISTRICT
THOUSAND OAKS, CALIFORNIA

SALINITY MANAGEMENT PIPELINE, PHASE 2A

LOCATION MAP, VICINITY MAP, DISCHARGE POINT AND INDEX TO DRAWINGS

FILE NO.	DATE	SPEC. NO.	SHEET
298/02	DEC 2010	470	02 OF 48 SHEETS

G E N E R A L N O T E S

1. Unless noted otherwise, all work shown in these documents is new and to be performed under this Contract.
2. Reference letters and numbers shown in circles are detail identification symbols: e.g. (A/15) means Detail "A" Sheet 15 or as referenced on Sheet 15. Symbol (B/–) means Detail "B" on that same sheet.
3. Reference numbers shown in ovals are Standard Drawing identification symbols: e.g. (101) means Standard Drawing No. 101. Unless otherwise noted, Standard Drawings noted on the plans are Calleguas MWD Standard Drawings.
4. Stations shown are along the the centerline of the pipeline or on a line normal to centerline of the pipeline.
5. Stationing is based on horizontal measurements of all tangent distances, sub–tangent distances at fabricated bends and true curve lengths where horizontal curves are indicated.
6. All profile elevations are expressed in feet above or below (if shown negative) mean sea level (MSL). Horizontal distances are in feet.
7. All profile elevations for the design alignment of the pipe, unless otherwise specifically shown, reference the outside bottom of the pipe.
8. All flanges shall be Class D, rated for a minimum working pressure of 175 psi, unless otherwise shown.
9. Not all pipe fittings or appurtenances may be called out or shown but are required to be furnished and installed by the Contractor to provide a complete piping system at no additional cost to the Owner.
10. Concrete thrust blocks for pipe 12 inches and smaller shall be provided at all horizontal and vertical fabricated bends where shown on the Drawings. All concrete thrust blocks shall be placed against undisturbed earth.
11. For all crossings of new pipelines above existing utilities:
    - The minimum clearance shall be 6 inches.
    - If the clearance is between 6 inches and 12 inches, construct in accordance with CMWD Std. Dwg 1101.
12. For all crossings of new pipelines beneath existing utilities:
    - Construct in accordance with CMWD Std. Dwg. 1103.
    - All existing utilities shall be properly supported during installation of the new pipeline.
    - If the existing utility (other than a CMP drain) is larger than 12 inches in outside diameter, it shall be supported using CMWD Std. Dwg. 1102.
    - If the existing utility is a box culvert, it shall be supported using a detail similar to CMWD Std. Dwg. 1102, with an I–Beam supporting the bottom of the box connected to two chains to support the box culvert.
13. Service laterals from a utility may or may not represent any or all service laterals from that utility. The Contractor is responsible to locate all service laterals whether shown or not on the Drawings. Relocation of individual service laterals 6 inches nominal diameter and smaller whether shown on the Drawings or not, if required, shall be the sole responsibility of the Contractor at no additional cost to the Owner.
14. Although some existing utilities are shown on pipe profiles and details, their depth may not be at depth indicated. Contractor is required to locate existing utilities per requirements of the Contract Documents.
15. Notify agencies and utility companies 48 hours prior to excavating in the vicinity of their facilities. CALL UNDERGROUND SERVICE ALERT – (800) 422–4133. Contractor is given notice that not all utility companies subscribe to USA and therefore may not be marked by USA and that utilities may not be shown on the list on Sheet 2 or the plans. This does not relieve the Contractor's responsibility to locate said utility.
16. Existing 12" sewer in Hueneme Road is encased in concrete for an unknown length along the design pipeline alignment. Width of the encasement may vary from 20" to 40" wide. Contractor shall protect in place, both the sewer and the concrete encasement.
17. Contractor shall acquire services of licensed land surveyor registered in the State of California to perform all necessary survey work to complete the work including locating easements and work areas, pipeline staking, pothole information, etc. The Contractor is required to install temporary benchmarks at every 100 feet along the pipeline and maintain them until the project is complete.

G E N E R A L N O T E S

18. Temporary benchmarks shown on plans may have been destroyed or damaged and may not exist in the location shown.
19. The Contractor shall be responsible for replacing any monumentation and/or benchmarks which are disturbed or destroyed by construction. Such points shall be referenced and replaced with appropriate monumentation by a licensed land surveyor or a registered civil engineer authorized to practice land surveying. A corner record or record of survey, as appropriate, shall be filed by the licensed land surveyor or registered civil engineer as required by the Land Surveyor's Act.
20. Contractor shall obtain a permit from Department of Industrial Relations, Division of Occupational Safety and Health (CAL–OSHA) when trench excavations exceed 5'–0". Contact CAL–OSHA at 1–818–901–5403 for further information (Health and Safety Code 17922.5).
21. Contractor shall obtain and pay for all permits which have not otherwise been obtained by the Owner but are required for construction of the Work.
22. All excavations or trenches in paved areas shall have pavement sawcut in a neat and uniform manner.
23. All match or join lines to existing asphaltic concrete paving without redwood headers shall be sawcut.
24. Adjust all valve boxes, manhole covers and all other surface appurtenances to finished grade unless otherwise shown or directed.
25. Utilize dielectric couplings and similar insulation between dissimilar metals, including between steel, stainless steel and copper whether or not indicated on the Plans or Specifications. Dielectric couplings shall be provided and installed at no additional cost to the Owner.
26. All streets, alleys, vehicular ways, sidewalks, and haul routes shall be kept clean and clear of debris, dirt and dust in a manner acceptable to the District and County of Ventura. These areas shall be cleaned at the end of each work day.
27. The Contractor shall have copies of the approved Contract Documents for this project on the site at all times, and the Contractor shall be familiar with all applicable standards, Specifications, permit requirements and other requirements of Contract Documents.
28. Construction work hours are shown on the traffic control drawings. Refer to Specifications for additional information, including limitations on and requirements for work hours, maximum length of open trench and construction sequence.
29. Existing blind flange (bulkhead) and valves to be removed were constructed as a part of the Oxnard Plain Brine Line Pipeline, Phase 1a project. Existing blow–offs and associated appurtenances, including piping, manholes, and covers, at bulkhead locations shall also be removed as noted. Details for Oxnard Plain Brine Line, Phase 1a as–built facilities are included in an appendix of the Specifications.
30. Pipes shall be installed per trench details shown on Detail "A" on Sheet 18.
31. Project signs shall be placed at both ends of construction. See Standard Dwg. 811.
32. Drawings may not show all or any existing vegetation or other improvements.
33. Pipeline alignment established from aerial topography, (aerial photos dated 6–24–2003) which were compiled by photogrammetric methods.

G E N E R A L N O T E S

35. A minimum of one PCMS shall be installed at each end of construction and shall be moved along with the construction. Additional required PCMSs are shown on the traffic control drawings.
36. Surface features shown on topography and photo plans, etc. may have changed since survey was completed. Contractor shall verify existence of surface features whether shown or not on the Drawings and shall consider any such changes in the bid.
37. All existing utilities shall be protected in place.
38. Temporary asphalt used for temporary pavement extensions shall be placed and maintained as shown on the Plans and as necessary to maintain 2 lanes of traffic at all times during both work time and non–work time hours, except where single–lane traffic is specifically shown on Traffic Control Drawings.
39. Where appropriate or as called out, perform work per CMWD Standard Drawings, which are included in an appendix to the Specifications.

S T R U C T U R A L N O T E S

1. Reinforced concrete shall conform to the ACI specification 318.
2. All reinforced concrete shall develop a minimum compressive strength of 4,000 psi in 28 days.
3. Unreinforced concrete used for the construction of thrust blocks, pipe bedding, and concrete cradles shall develop a minimum compressive strength of 3,000 psi in 28 days.
4. Reinforcing steel shall be deformed bars conforming to A.S.T.M. A615, grade 60 or ASTM A706, Grade 60.
5. Coverage for reinforcing bars, except where shown otherwise, shall be as follows: 3" for concrete placed against earth. 2" for exterior wall surfaces which are formed and backfilled, and for top slabs of miscellaneous structures.
6. Laps for reinforcing bars in concrete, except where shown or noted otherwise, shall be 30 bar diameters. Laps in horizontal steel shall be staggered, unless shown otherwise. Laps for reinforcing bars in masonry shall be 40 bar diameters, unless shown otherwise.
7. Dowels, pipes, water stops and other installed materials and accessories shall be held securely in position while concrete is being placed.
8. Reinforcing interrupted by openings shall be grouped at each side of openings unless shown otherwise. Reinforcing cut at the openings shall be hooked 90 degrees.
9. All exposed corners of concrete shall have ¾" minimum chamfer, unless noted otherwise.
10. Construction joints shall not be placed at locations other than those shown on the Drawings without the prior written approval of the Owner or Engineer.

REVISIONS		
MARK	DATE	DESCRIPTION
		DRAFT NOT FOR CONSTRUCTION DATE: DECEMBER 15, 2010

REGISTERED PROFESSIONAL ENGINEER REAN DAVID KUNITAKE C–54285 Exp. 12–31–11 CIVIL STATE OF CALIFORNIA

CAUTION 0 1" THIS DRAWING IS TO SCALE ONLY IF BAR MEASURES 1 INCH

PERLITER & INGALSBE CONSULTING ENGINEERS ALTADENA, CALIFORNIA

SUBMITTED: FOR THE CONSULTING ENGINEERS R.C.E. NO. 54285

REVIEWED: MANAGER OF ENGINEERING, CALLEGUAS MUNICIPAL WATER DISTRICT

DESIGNED: R.Y.K. DRAWN: V.T. CHECKED: R.Y.K.

CALLEGUAS MUNICIPAL WATER DISTRICT
THOUSAND OAKS, CALIFORNIA

SALINITY MANAGEMENT PIPELINE, PHASE 2A

GENERAL AND STRUCTURAL NOTES

FILE NO.	DATE	SPEC. NO.	SHEET 03 OF 48 SHEETS
298/03	DEC 2010	470	

A B B R E V I A T I O N S

A & V	AIR AND VACUUM
AB	AGGREGATE BASE
AC	ASPHALT CONCRETE
ACI	AMERICAN CONCRETE INSTITUTE
ACP	ASBESTOS CEMENT PIPE
AP	ANGLE POINT
APPROV	APPROVED
APPROX	APPROXIMATELY
ASTM	AMERICAN STANDARD TESTING MATERIALS
ASSY	ASSEMBLY
AVARV	AIR VACUUM & AIR RELEASE VALVE
BC	BEGIN CURVE
BF	BLIND FLANGE
BFV	BUTTERFLY VALVE
BK	BACK
BLDG	BUILDING
BM	BENCHMARK
B-O	BLOW-OFF
BOT, BTM	BOTTOM
BV	BALL VALVE
C & G	CURB AND GUTTER
CATV	CABLE TELEVISION
CB	CATCH BASIN
CF	CURB FACE
CI	CAST IRON
CL	CLASS
C/L, ℄	CENTERLINE
CLR	CLEAR
CMC	CEMENT MORTAR COATING
CML&C	CEMENT MORTAR LINED & COATED
CMP	CORRUGATED METAL PIPE
CMWD	CALLEGUAS MUNICIPAL WATER DISTRICT
COMP	COMPACTION
COMM	COMMUNICATION
CONC	CONCRETE
CONN	CONNECTION
CONST	CONSTRUCTION
CONT	CONTINUED OR CONTINUOUS
COORD	COORDINATE
CPLG	COUPLING
DI	DUCTILE IRON
DIA	DIAMETER
DISTR	DISTRIBUTION
DOC	DOCUMENT
DPW	DEPARTMENT OF PUBLIC WORKS
DTL	DETAIL
DWG	DRAWING
E	EAST, ELECTRICAL
EA	EACH
EC	END CURVE
EL, ELEV	ELEVATION
ELECT	ELECTRICAL, ELECTRONIC
EP	EDGE OF PAVEMENT
EQ	EQUATION, EQUAL
EQUIV	EQUIVALENT
ESMT	EASEMENT
EW	EACH WAY
EXIST	EXISTING
FAB	FABRICATE
FG	FINISHED GRADE
FH	FIRE HYDRANT
FLEX	FLEXIBLE
FLG	FLANGE
FM	FORCE MAIN
FT	FEET, FOOT
G	GAS (PROPANE)
GA	GAUGE
GC	GRADE CHANGE
GPM	GALLONS PER MINUTE
GV	GATE VALVE
HDPE	HIGH DENSITY POLYETHYLENE
HGL	HYDRAULIC GRADE LINE
HOR	HORIZONTAL
HP	HIGH PRESSURE, HIGH POINT
ID	INSIDE DIAMETER
IN	INCH
IP	IRON PIPE
IPS	IRON PIPE SIZE
INVT, INV	INVERT
IRR	IRRIGATION
JT	JOINT
L	LENGTH, LEFT
LAT	LATERAL
LT	LEFT
LP	LOW POINT, LIGHT POLE
MAX	MAX, MAXIMUM
MB	MAILBOX
MFR	MANUFACTURER
MH	MANHOLE; MANHOLE ACCESS STRUCTURE (ON NEW PIPE)
MIN	MINIMUM, MINUTE
MISC	MISCELLANEOUS
MON	MONUMENT
MUTCD	MANUAL OF UNIFORM TRAFFIC CONTROL DEVICES
MWD	MUNICIPAL WATER DISTRICT
N	NORTH
N/O	NORTH OF
NO(S) OR #	NUMBER(S)
NRS	NON-RISING STEM
NTS	NOT TO SCALE
OC	ON CENTER
OD	OUTSIDE DIAMETER
ODD	OXNARD DRAINAGE DISTRICT
OE/T	OVERHEAD ELECTRICAL AND/OR TELEPHONE
OF	OUTSIDE FACE
OVHD, O/H	OVERHEAD
OVMWD	OCEAN VIEW MUNICIPAL WATER DISTRICT
P	POST, POLE
P&I	PERLITER AND INGALSBE
PCC	PORTLAND CEMENT CONCRETE
PCH	PACIFIC COAST HIGHWAY
PCMS	PORTABLE CHANGEABLE MESSAGE SIGN
PE	PLAIN END, POLYETHYLENE
PED	PEDESTAL
PL	PLATE
P/L, ℙ	PROPERTY LINE
PMB	PROCESSED MISC. BASE
P.O.C.	POINT ON CURVE
PP	POWER POLE
PRESS	PRESSURE
PSI	POUNDS PER SQUARE INCH
PT	POINT, POINT OF TANGENT
PVC	POLYVINYL CHLORIDE
PVI	POINT VERTICAL INTERSECT
PVMT	PAVEMENT
QTY	QUANTITY
R/W, R-O-W	RIGHT OF WAY
RCB	REINFORCED CONCRETE BOX
RCP	REINFORCED CONCRETE PIPE
RD	ROAD
REQD	REQUIRED
RS	RESILIENT SEATED
RT, R	RIGHT
S	SIGN, SEWER, SLOPE, SOUTH
SD, S/D	STORM DRAIN
SCE	SOUTHERN CALIFORNIA EDISON
SCG	SOUTHERN CALIFORNIA GAS
SCH	SCHEDULE
SERV	SERVICE
SF	SQUARE FEET
SHT	SHEET
SMH	SEWER MANHOLE
S/O	SOUTH OF
SPECS	SPECIFICATIONS
SQ	SQUARE
SR	STATE ROUTE
SS	STAINLESS STEEL, SELECTED SUBBASE
SSPWC	STANDARD SPECS. FOR PUBLIC WORKS CONSTRUCTION
STA	STATION
STD	STANDARD
TBM	TEMPORARY BENCHMARK
TC	TRAFFIC CONTROL
TCE	TEMPORARY CONSTRUCTION EASEMENT
T, TEL	TELEPHONE
TEMP	TEMPORARY
THRD	THREADED
THK	THICK
TMH	TELEPHONE MANHOLE
TOC	TOP OF CURB/CONCRETE
TYP	TYPICAL
UWCD	UNITED WATER CONSERVATION DISTRICT
V	VALVE, VERTICAL
VAR	VARIES
VB	VERTICAL BEND, VALVE BOX
VC	VERTICAL CURVE, VENTURA COUNTY
VCP	VITRIFIED CLAY PIPE
VER,VERT	VERTICAL
W/	WITH
W/O	WITHOUT
W	WEST, WATER
WM	WATER METER, WELL MONUMENT
WPD	WATERSHED PROTECTION DISTRICT
WS	WELDED STEEL
WW	WASTEWATER

NOTE: SOME ABBREVIATIONS MAY NOT BE USED IN THIS CONTRACT.

L E G E N D

PROPOSED PIPELINE	FIRE HYDRANT
EXISTING PIPELINE	VERTICAL PIPE
PROPERTY LINE	VERTICAL PIPE WITH COVER
SURVEY CONTROL CENTERLINE	A&V OR COMBINATION AIR & VACUUM RELIEF VALVE ASSEMBLY
BOUNDARY LINE	BLOW-OFF
PIPE ABOVE GROUND PIPE	VB VALVE BOX
W WATER	COORDINATE GRID POINT
WW WASTEWATER	S SIGN
T UNDERGROUND TELEPHONE	MB MAILBOX
OE/T OVERHEAD ELECT. AND/OR TEL.	MH OR MANHOLE
E UNDERGROUND ELECTRICAL CONDUIT	P POST OR POLE
SD D STORM DRAIN OR DRAIN	TCB TRAFFIC CONTROL BOX
G UNDERGROUND GAS LINE	M OR WM METER
ATT AT&T COMM. LINE	U UNKNOWN SURFACE UTILITY OBJECT
X FENCE	VEGETATION/CROP
GUARD RAIL	APPROX. LIMIT OF TEMPORARY PAVING
POWER POLE	APPROX. LIMIT OF ASPHALT OVERLAY/PAVING
TMH TELEPHONE MANHOLE	
SMH SEWER MANHOLE	
TRAFFIC CONTROL LOOPS	
BENCHMARK/TEMP. BENCHMARK/WELL MONUMENT	
BORING LOCATION	

S U R V E Y

1. Horizontal datum used for the survey shown on these plans is the State Plane Coordinates North American Datum 1983.
2. Vertical datum used for the survey shown on these plans is the North American Vertical Datum 1988.

TEMPORARY BENCHMARKS	ELEVATION	DESCRIPTION
TBM 1	78.50'	EW 5169
TBM 2	71.95'	Ventura County PID 355
TBM 3	59.44'	Ventura County PID 745

VERT CONTROL MONUMENT	ELEVATION	DESCRIPTION

WELL MONUMENT CONTROL POINT	NORTH	EAST	ELEVATION & DESCRIPTION
61	1,886,736.747	6,243,316.702	51.88
103	1,890,770.988	6,246,983.933	70.40
104	1,892,689.989	6,247,857.459	76.87

REVISIONS

MARK	DATE	DESCRIPTION

DRAFT
NOT FOR CONSTRUCTION
DATE: DECEMBER 15, 2010

REGISTERED PROFESSIONAL ENGINEER
REAN DAVID KUNITME
C-54285
Exp. 12-31-11
CIVIL
STATE OF CALIFORNIA

CAUTION
0 1"
THIS DRAWING IS TO SCALE ONLY IF BAR MEASURES 1 INCH

PERLITER & INGALSBE
CONSULTING ENGINEERS
ALTADENA, CALIFORNIA

SUBMITTED: FOR THE CONSULTING ENGINEERS R.C.E. NO. 54285
REVIEWED: MANAGER OF ENGINEERING, CALLEGUAS MUNICIPAL WATER DISTRICT
DESIGNED: R.Y.K. DRAWN: V.T. CHECKED: R.Y.K.

CALLEGUAS MUNICIPAL WATER DISTRICT
THOUSAND OAKS, CALIFORNIA

SALINITY MANAGEMENT PIPELINE, PHASE 2A

ABBREVIATIONS, SYMBOLS LEGEND AND SURVEY CONTROL POINTS

FILE NO.	DATE	SPEC. NO.	SHEET
298/04	DEC 2010	470	04 OF 48 SHEETS

PROFILE:

HORIZ. SCALE: 1" = 300'
VERT. SCALE: 1" = 30'

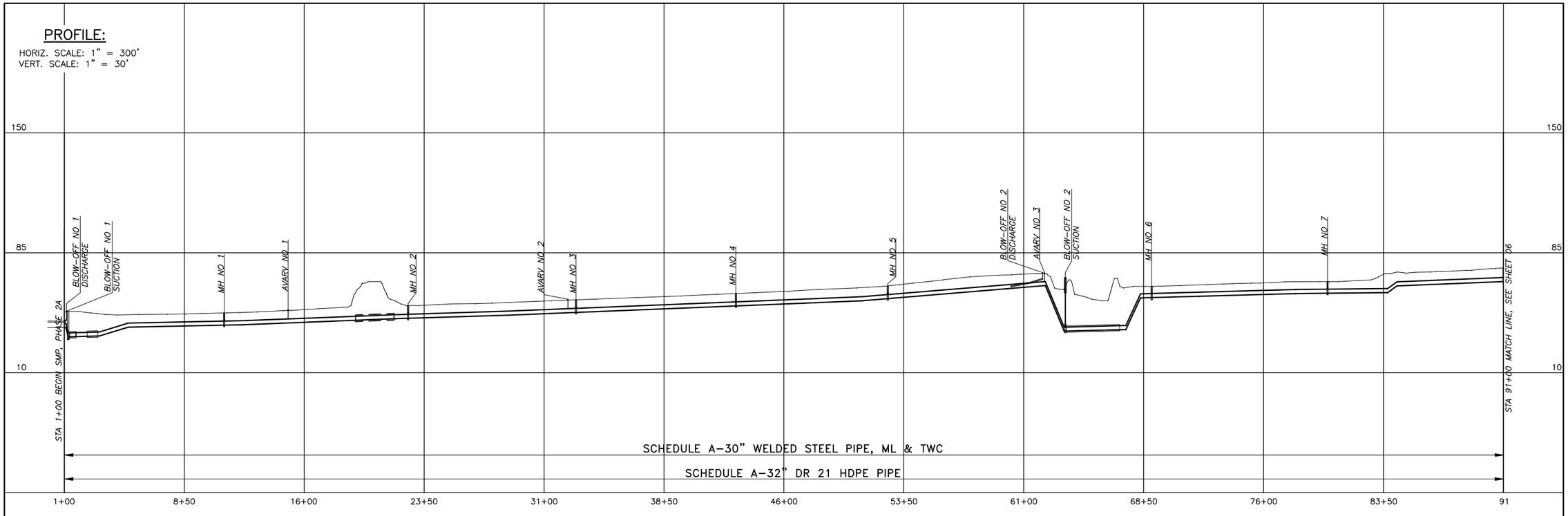

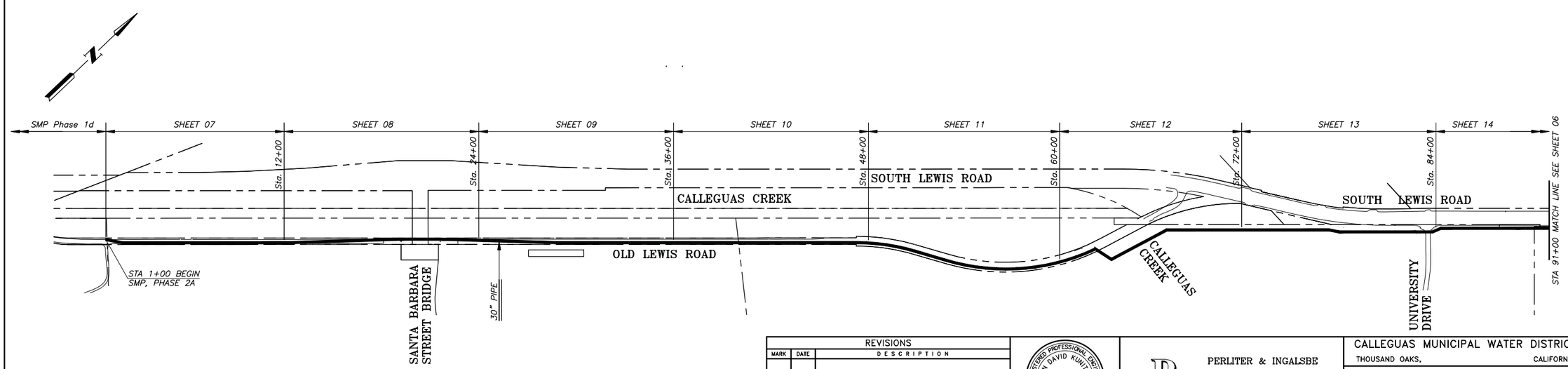

PLAN

300 0 300 600 900 FEET

SCALE: 1 IN. = 300 FT.

REVISIONS		
MARK	DATE	DESCRIPTION

DRAFT
NOT FOR CONSTRUCTION
DATE: DECEMBER 15, 2010

REGISTERED PROFESSIONAL ENGINEER
REAN DAVID KUNITANI
C-54285
Exp. 12-31-11
CIVIL
STATE OF CALIFORNIA

CAUTION
0 1"
THIS DRAWING IS TO SCALE ONLY IF BAR MEASURES 1 INCH

PERLITER & INGALSBE
CONSULTING ENGINEERS
ALTADENA, CALIFORNIA

SUBMITTED: FOR THE CONSULTING ENGINEERS R.C.E. NO. 54285
REVIEWED: MANAGER OF ENGINEERING, CALLEGUAS MUNICIPAL WATER DISTRICT
DESIGNED: R.Y.K. DRAWN: V.T. CHECKED: R.Y.K.

CALLEGUAS MUNICIPAL WATER DISTRICT
THOUSAND OAKS, CALIFORNIA

SALINITY MANAGEMENT PIPELINE, PHASE 2A

KEY PLAN AND PROFILE
STA 1+00 TO STA 91+00

FILE NO.	DATE	SPEC. NO.	SHEET
298/05	DEC 2010	470	05 OF 48 SHEETS

PROFILE:

HORIZ. SCALE: 1" = 40'
VERT. SCALE: 1" = 4'

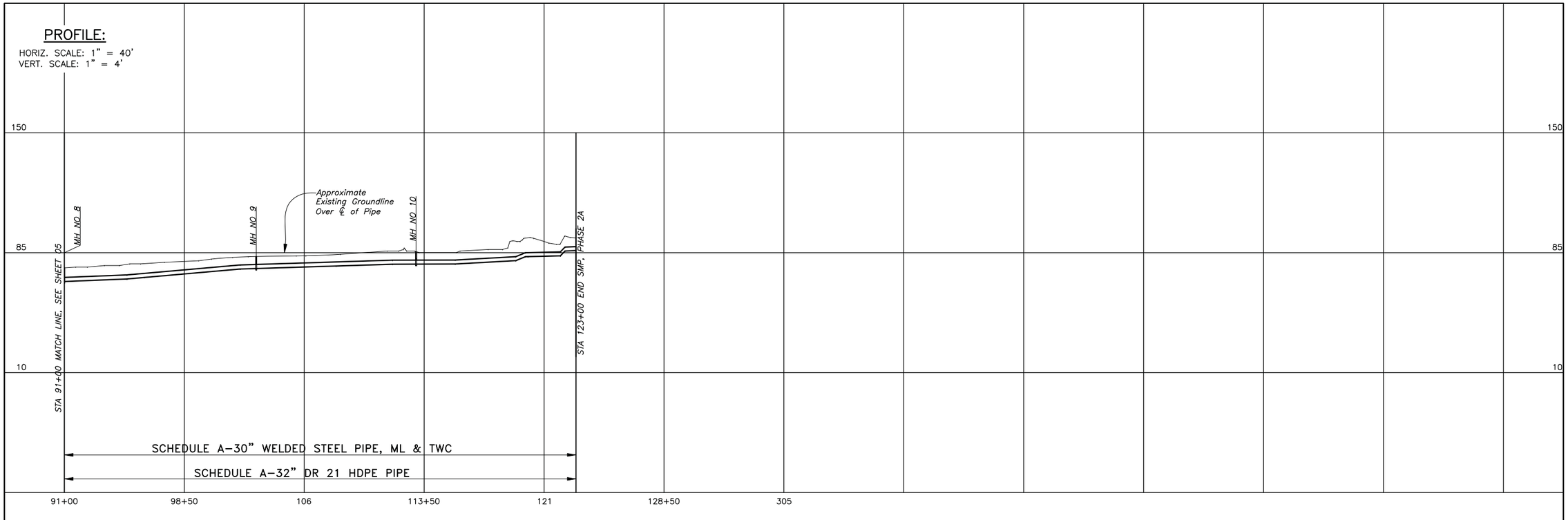

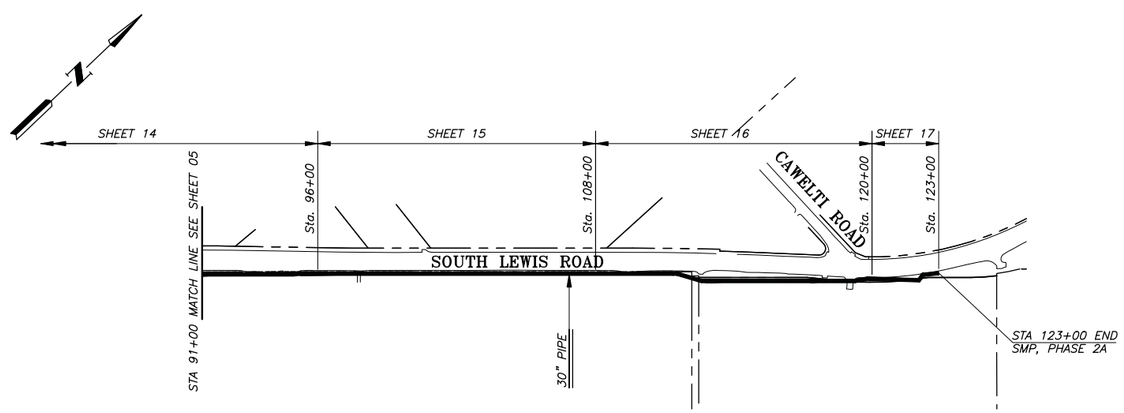

PLAN

300 0 300 600 900 FEET

SCALE: 1 IN. = 300 FT.

REVISIONS		
MARK	DATE	DESCRIPTION

DRAFT
NOT FOR CONSTRUCTION
DATE: DECEMBER 15, 2010

REGISTERED PROFESSIONAL ENGINEER
REAN DAVID KUNITAKE
C-54285
Exp. 12-31-11
CIVIL
STATE OF CALIFORNIA

CAUTION
0 1"
THIS DRAWING IS TO SCALE ONLY IF BAR MEASURES 1 INCH

PERLITER & INGALSBE
CONSULTING ENGINEERS
ALTADENA, CALIFORNIA

SUBMITTED: FOR THE CONSULTING ENGINEERS R.C.E. NO. 54285
REVIEWED: MANAGER OF ENGINEERING, CALLEGUAS MUNICIPAL WATER DISTRICT
DESIGNED: R.Y.K. DRAWN: V.T. CHECKED: R.Y.K.

CALLEGUAS MUNICIPAL WATER DISTRICT
THOUSAND OAKS, CALIFORNIA

SALINITY MANAGEMENT PIPELINE, PHASE 2A

KEY PLAN AND PROFILE
STA 91+00 TO STA 123+00

FILE NO.	DATE	SPEC. NO.	SHEET
298/06	DEC 2010	470	06 OF 48 SHEETS

PROFILE:

HORIZ. SCALE: 1" = 40'
VERT. SCALE: 1" = 4'

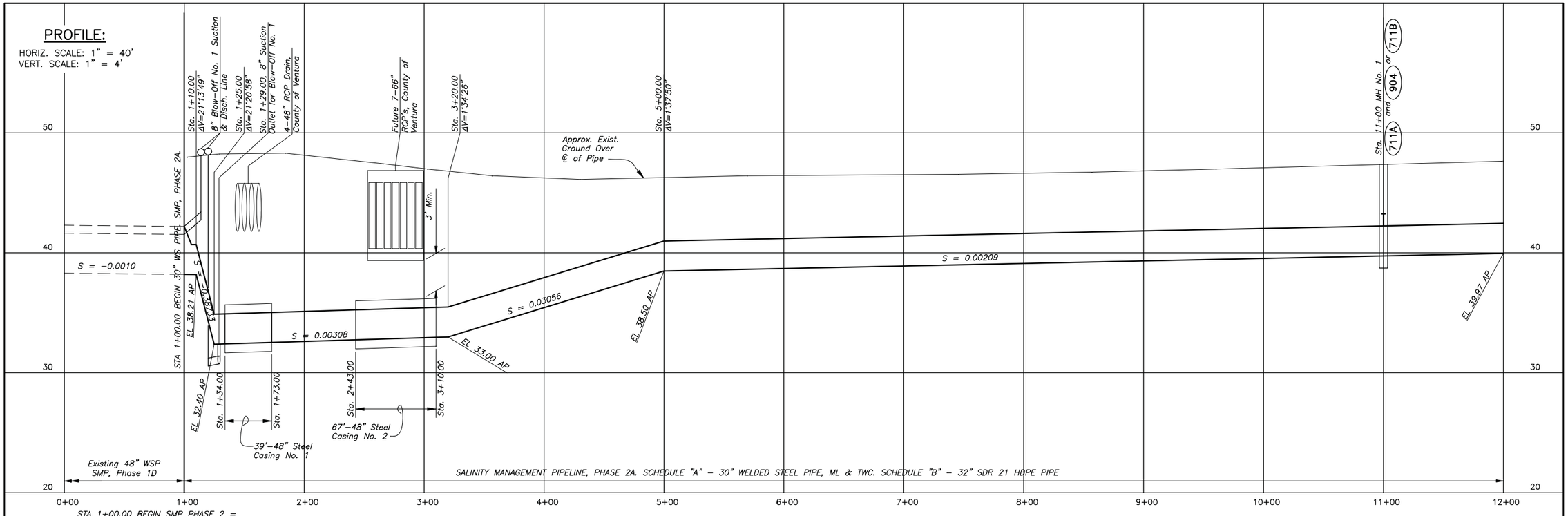

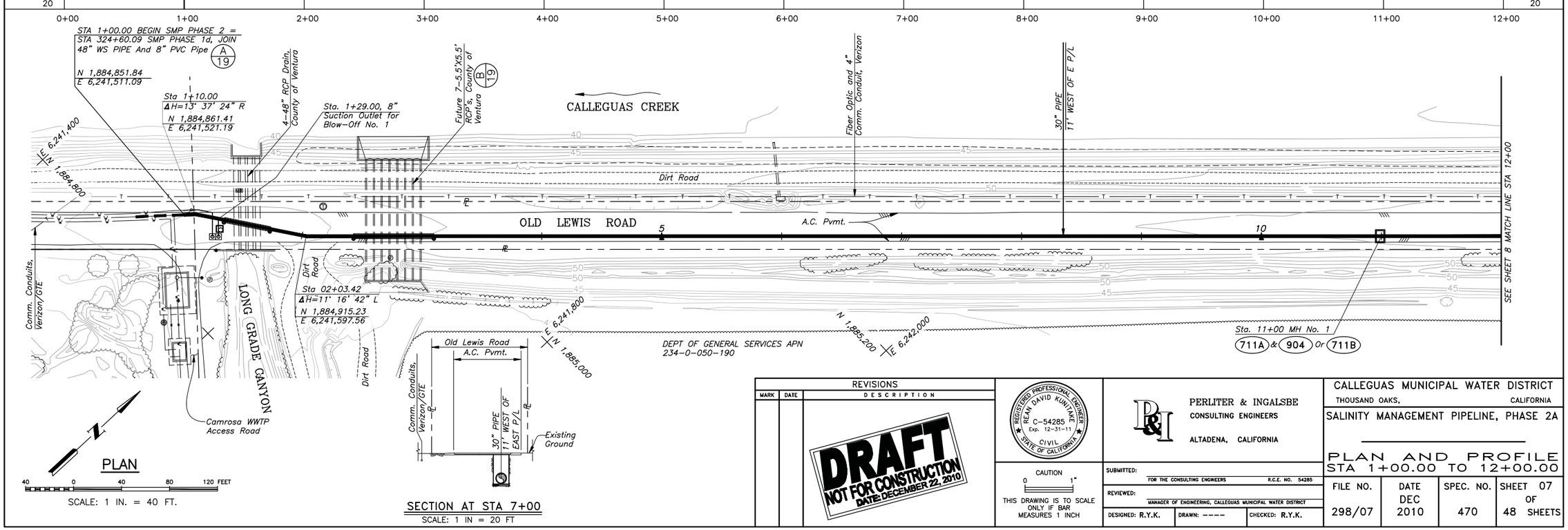

PLAN

SCALE: 1 IN. = 40 FT.

SECTION AT STA 7+00

SCALE: 1 IN = 20 FT

REVISIONS		
MARK	DATE	DESCRIPTION

DRAFT
NOT FOR CONSTRUCTION
DATE: DECEMBER 22, 2010

REGISTERED PROFESSIONAL ENGINEER REAN DAVID KUNTAMAN C-54285 Exp. 12-31-11 CIVIL STATE OF CALIFORNIA

CAUTION
0 1"
THIS DRAWING IS TO SCALE ONLY IF BAR MEASURES 1 INCH

PERLITER & INGALSBE
CONSULTING ENGINEERS
ALTADENA, CALIFORNIA

SUBMITTED: FOR THE CONSULTING ENGINEERS R.C.E. NO. 54285
REVIEWED: MANAGER OF ENGINEERING, CALLEGUAS MUNICIPAL WATER DISTRICT
DESIGNED: R.Y.K. DRAWN: ---- CHECKED: R.Y.K.

CALLEGUAS MUNICIPAL WATER DISTRICT
THOUSAND OAKS, CALIFORNIA

SALINITY MANAGEMENT PIPELINE, PHASE 2A

PLAN AND PROFILE
STA 1+00.00 TO 12+00.00

FILE NO.	DATE	SPEC. NO.	SHEET
298/07	DEC 2010	470	07 OF 48 SHEETS

PROFILE:

HORIZ. SCALE: 1" = 40'
VERT. SCALE: 1" = 4'

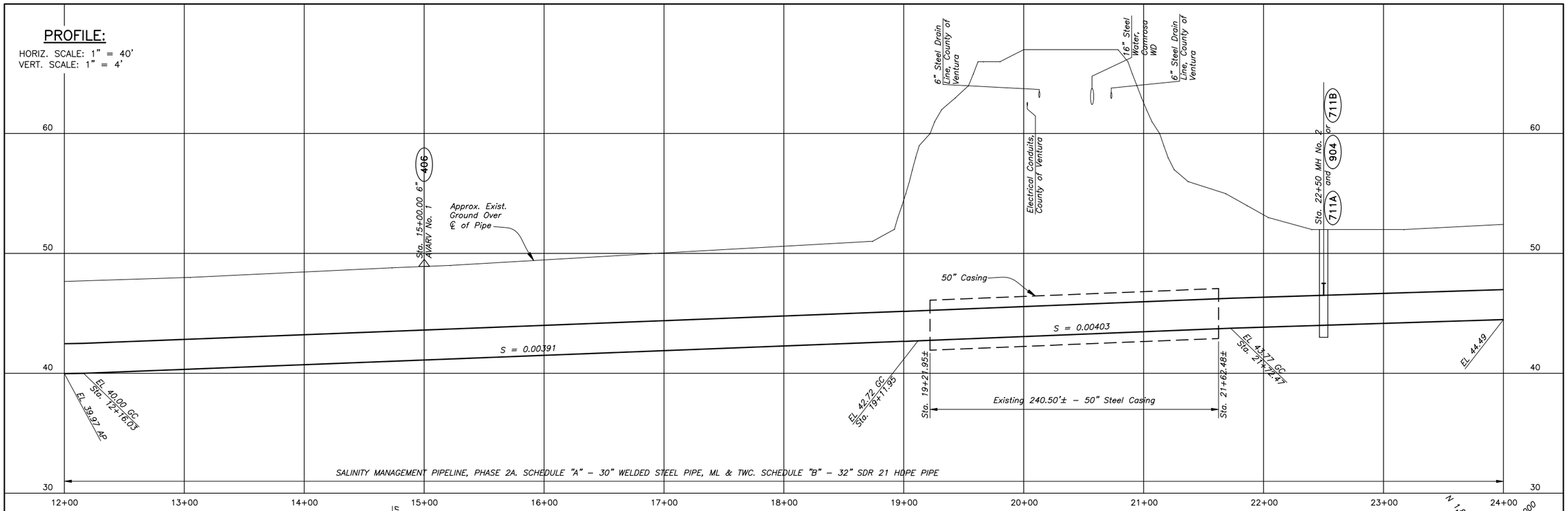

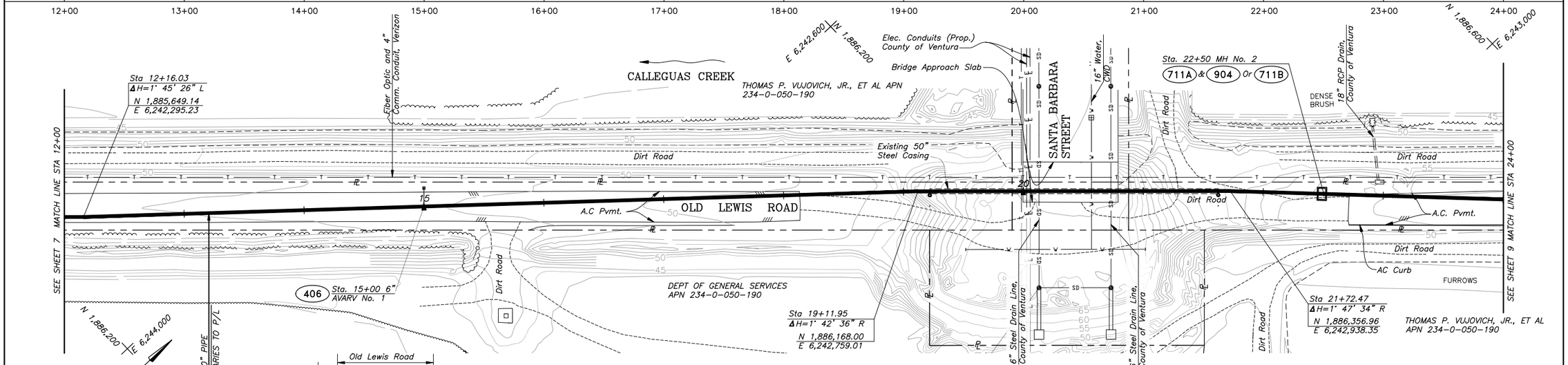

PLAN

40 0 40 80 120 FEET

SCALE: 1 IN. = 40 FT.

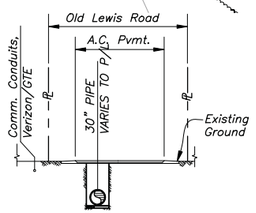

SECTION AT STA 17+00

SCALE: 1 IN = 20 FT

REVISIONS		
MARK	DATE	DESCRIPTION

DRAFT
NOT FOR CONSTRUCTION
DATE: DECEMBER 22, 2010

REGISTERED PROFESSIONAL ENGINEER REAN DAVID KUNITAKE C-54285 Exp. 12-31-11 CIVIL STATE OF CALIFORNIA

CAUTION
0 1"
THIS DRAWING IS TO SCALE ONLY IF BAR MEASURES 1 INCH

PERLITER & INGALSBE
CONSULTING ENGINEERS
ALTADENA, CALIFORNIA

SUBMITTED: FOR THE CONSULTING ENGINEERS R.C.E. NO. 54285
REVIEWED: MANAGER OF ENGINEERING, CALLEGUAS MUNICIPAL WATER DISTRICT
DESIGNED: R.Y.K. DRAWN: ---- CHECKED: R.Y.K.

CALLEGUAS MUNICIPAL WATER DISTRICT
THOUSAND OAKS, CALIFORNIA

SALINITY MANAGEMENT PIPELINE, PHASE 2A

PLAN AND PROFILE
STA 12+00.00 TO 24+00.00

FILE NO.	DATE	SPEC. NO.	SHEET 08 OF 48 SHEETS
298/08	DEC 2010	470	

PROFILE:

HORIZ. SCALE: 1" = 40'
VERT. SCALE: 1" = 4'

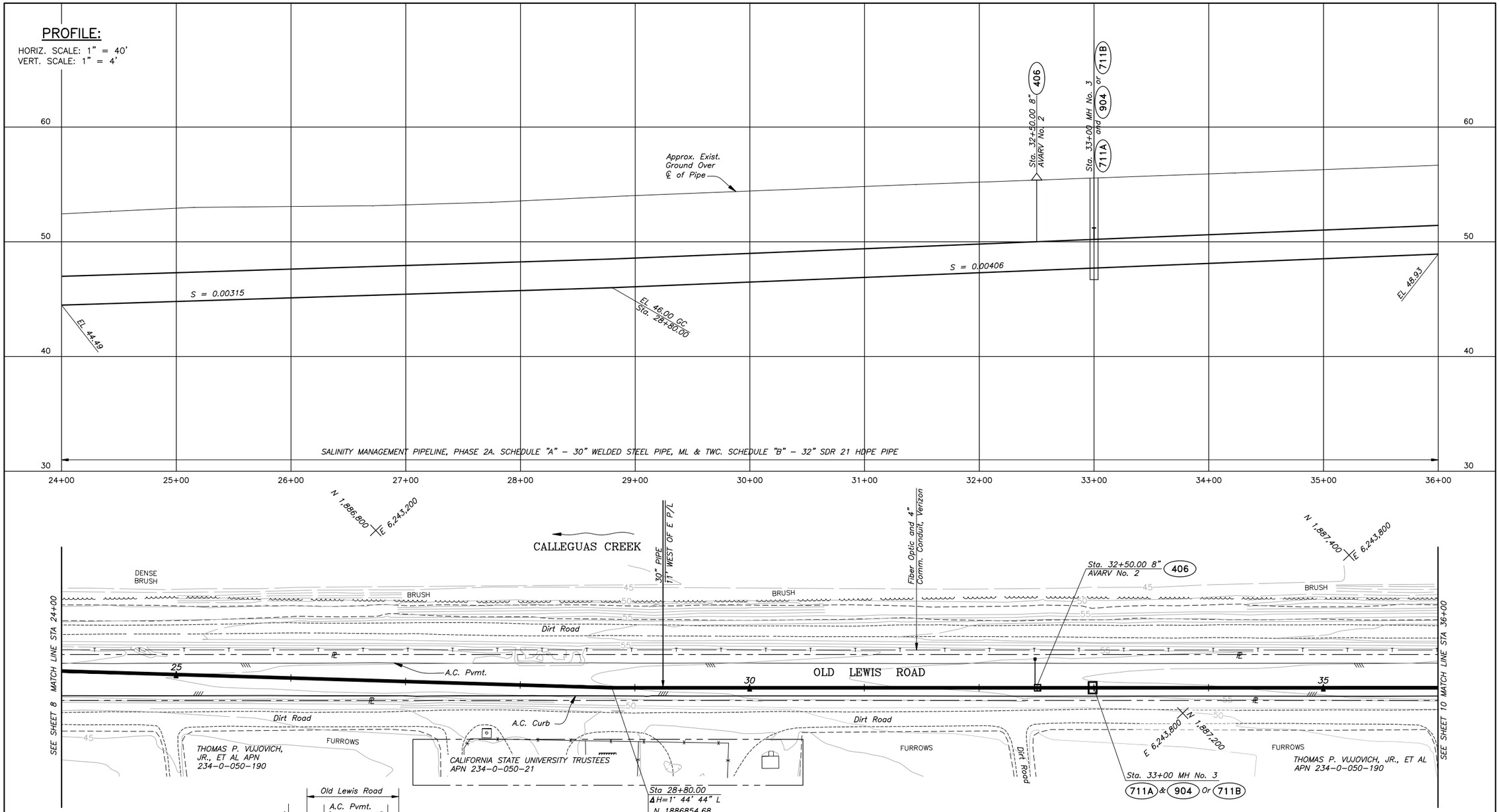

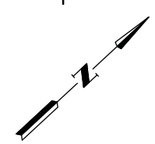

PLAN

40 0 40 80 120 FEET

SCALE: 1 IN. = 40 FT.

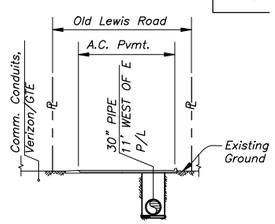

SECTION AT STA 29+00

SCALE: 1 IN = 20 FT

REVISIONS		
MARK	DATE	DESCRIPTION

DRAFT
NOT FOR CONSTRUCTION
DATE: DECEMBER 22, 2010

REGISTERED PROFESSIONAL ENGINEER
REAN DAVID KUNTANE
C-54285
Exp. 12-31-11
CIVIL
STATE OF CALIFORNIA

CAUTION
0 1"
THIS DRAWING IS TO SCALE ONLY IF BAR MEASURES 1 INCH

PERLITER & INGALSBE
CONSULTING ENGINEERS
ALTADENA, CALIFORNIA

SUBMITTED: FOR THE CONSULTING ENGINEERS R.C.E. NO. 54285
REVIEWED: MANAGER OF ENGINEERING, CALLEGUAS MUNICIPAL WATER DISTRICT
DESIGNED: R.Y.K. DRAWN: ---- CHECKED: R.Y.K.

CALLEGUAS MUNICIPAL WATER DISTRICT
THOUSAND OAKS, CALIFORNIA

SALINITY MANAGEMENT PIPELINE, PHASE 2A

PLAN AND PROFILE
STA 24+00.00 TO 36+00.00

FILE NO.	DATE	SPEC. NO.	SHEET
298/09	DEC 2010	470	09 OF 48 SHEETS

PROFILE:

HORIZ. SCALE: 1" = 40'
VERT. SCALE: 1" = 4'

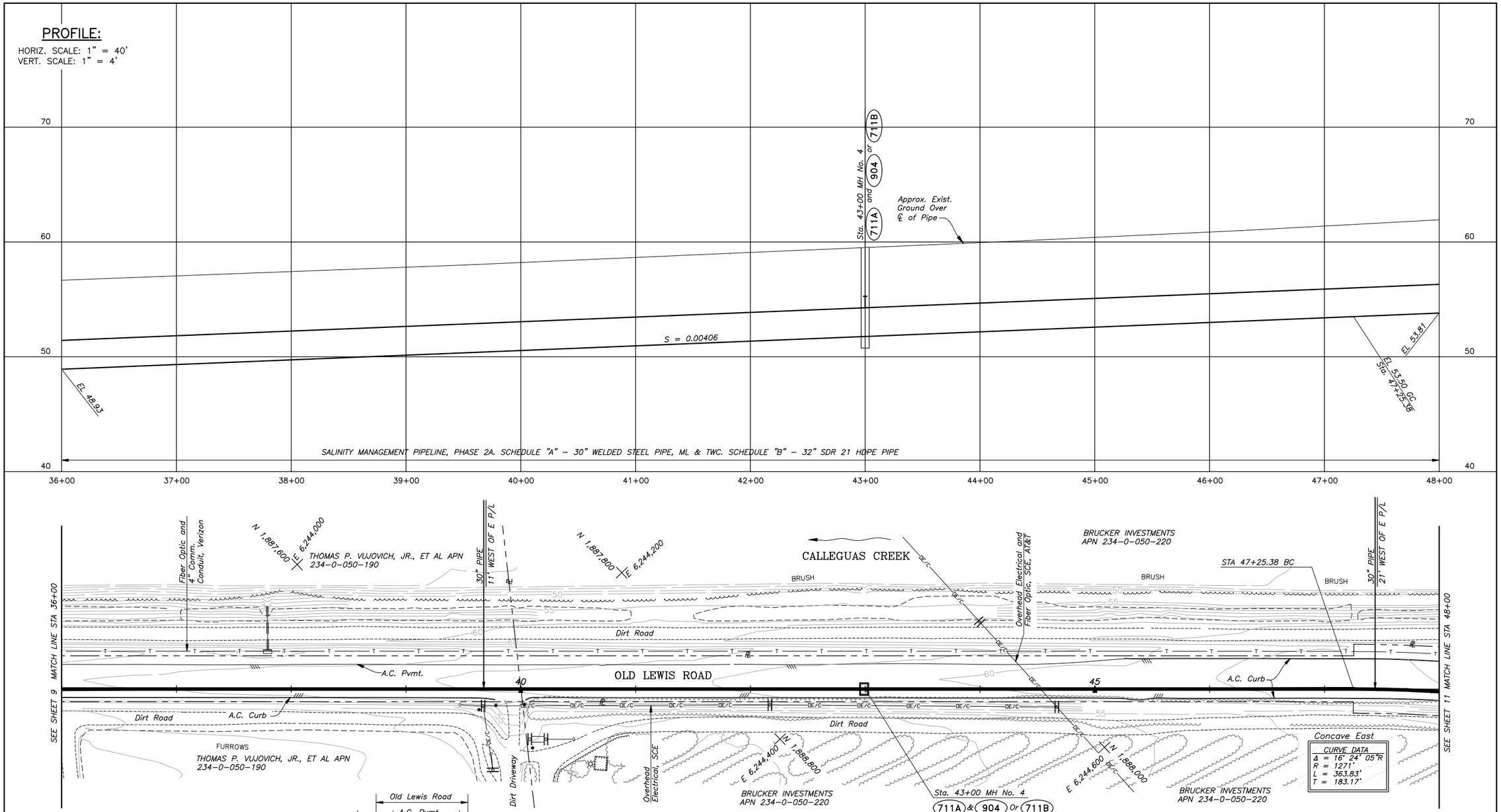

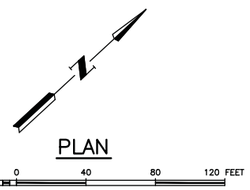

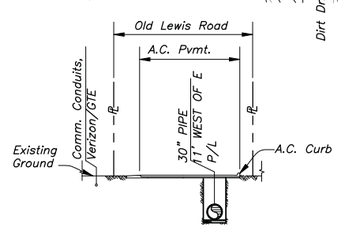

SECTION AT STA 42+00
SCALE: 1 IN = 20 FT

REVISIONS		
MARK	DATE	DESCRIPTION

DRAFT
NOT FOR CONSTRUCTION
DATE: DECEMBER 22, 2010

REGISTERED PROFESSIONAL ENGINEER
REAN DAVID KUNITAKE
C-54285
Exp. 12-31-11
CIVIL
STATE OF CALIFORNIA

CAUTION
0 1"
THIS DRAWING IS TO SCALE ONLY IF BAR MEASURES 1 INCH

PERLITER & INGALSBE
CONSULTING ENGINEERS
ALTADENA, CALIFORNIA

SUBMITTED: FOR THE CONSULTING ENGINEERS R.C.E. NO. 54285
REVIEWED: MANAGER OF ENGINEERING, CALLEGUAS MUNICIPAL WATER DISTRICT
DESIGNED: R.Y.K. DRAWN: ---- CHECKED: R.Y.K.

CALLEGUAS MUNICIPAL WATER DISTRICT
THOUSAND OAKS, CALIFORNIA

SALINITY MANAGEMENT PIPELINE, PHASE 2A

PLAN AND PROFILE
STA 36+00.00 TO 48+00.00

FILE NO.	DATE	SPEC. NO.	SHEET
298/10	DEC 2010	470	10 OF 48 SHEETS

PROFILE:

HORIZ. SCALE: 1" = 40'
VERT. SCALE: 1" = 4'

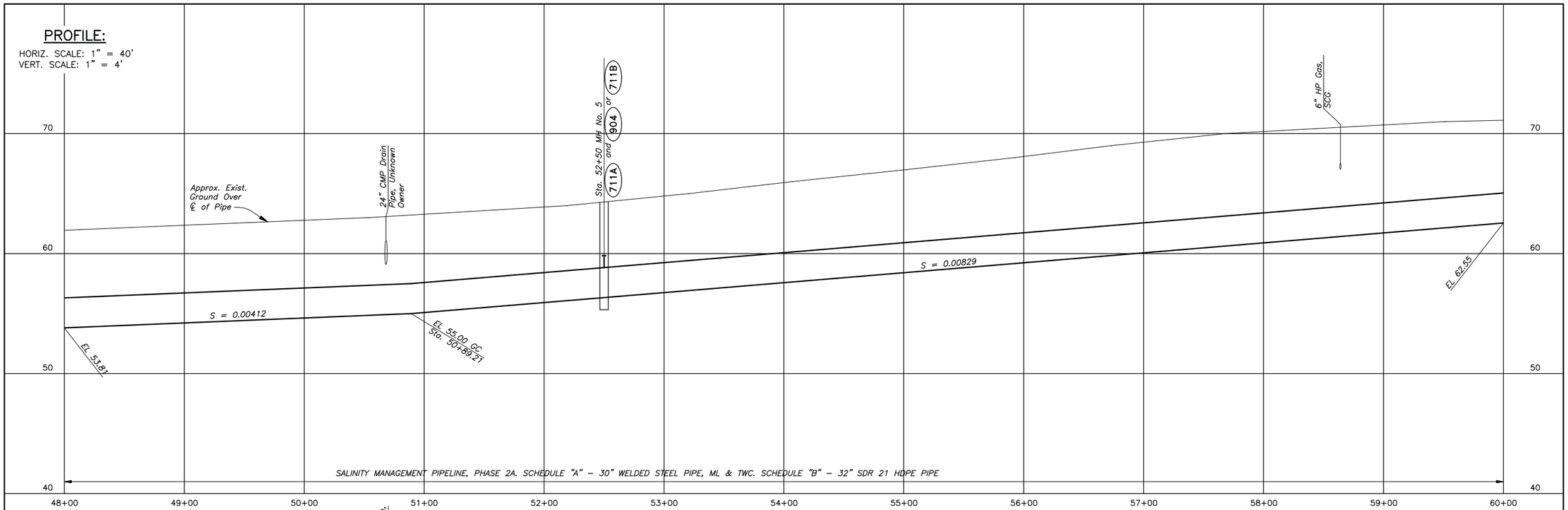

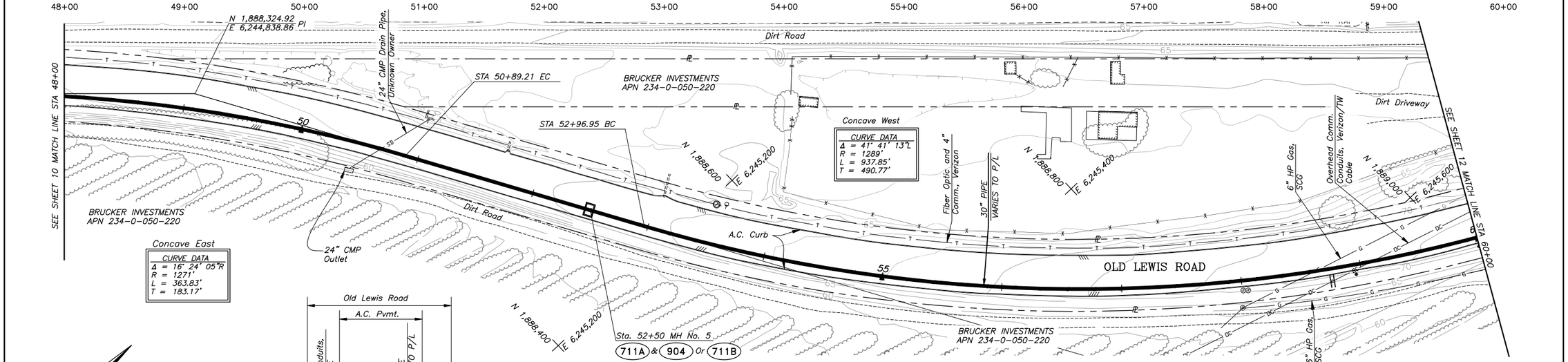

PLAN

40 0 40 80 120 FEET

SCALE: 1 IN. = 40 FT.

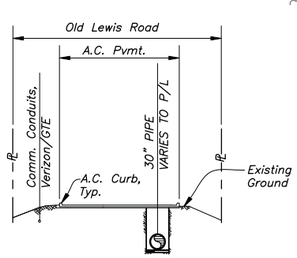

SECTION AT STA 57+00

SCALE: 1 IN = 20 FT

REVISIONS		
MARK	DATE	DESCRIPTION

DRAFT
NOT FOR CONSTRUCTION
DATE: DECEMBER 22, 2010

REGISTERED PROFESSIONAL ENGINEER
REAN DAVID KUNITAKE
C-54285
Exp. 12-31-11
CIVIL
STATE OF CALIFORNIA

CAUTION
0 1"
THIS DRAWING IS TO SCALE ONLY IF BAR MEASURES 1 INCH

PERLITER & INGALSBE
CONSULTING ENGINEERS
ALTADENA, CALIFORNIA

SUBMITTED: FOR THE CONSULTING ENGINEERS R.C.E. NO. 54285
REVIEWED: MANAGER OF ENGINEERING, CALLEGUAS MUNICIPAL WATER DISTRICT
DESIGNED: R.Y.K. DRAWN: ---- CHECKED: R.Y.K.

CALLEGUAS MUNICIPAL WATER DISTRICT
THOUSAND OAKS, CALIFORNIA

SALINITY MANAGEMENT PIPELINE, PHASE 2A

PLAN AND PROFILE
STA 48+00.00 TO 60+00.00

FILE NO.	DATE	SPEC. NO.	SHEET 11 OF 48 SHEETS
298/11	DEC 2010	470	

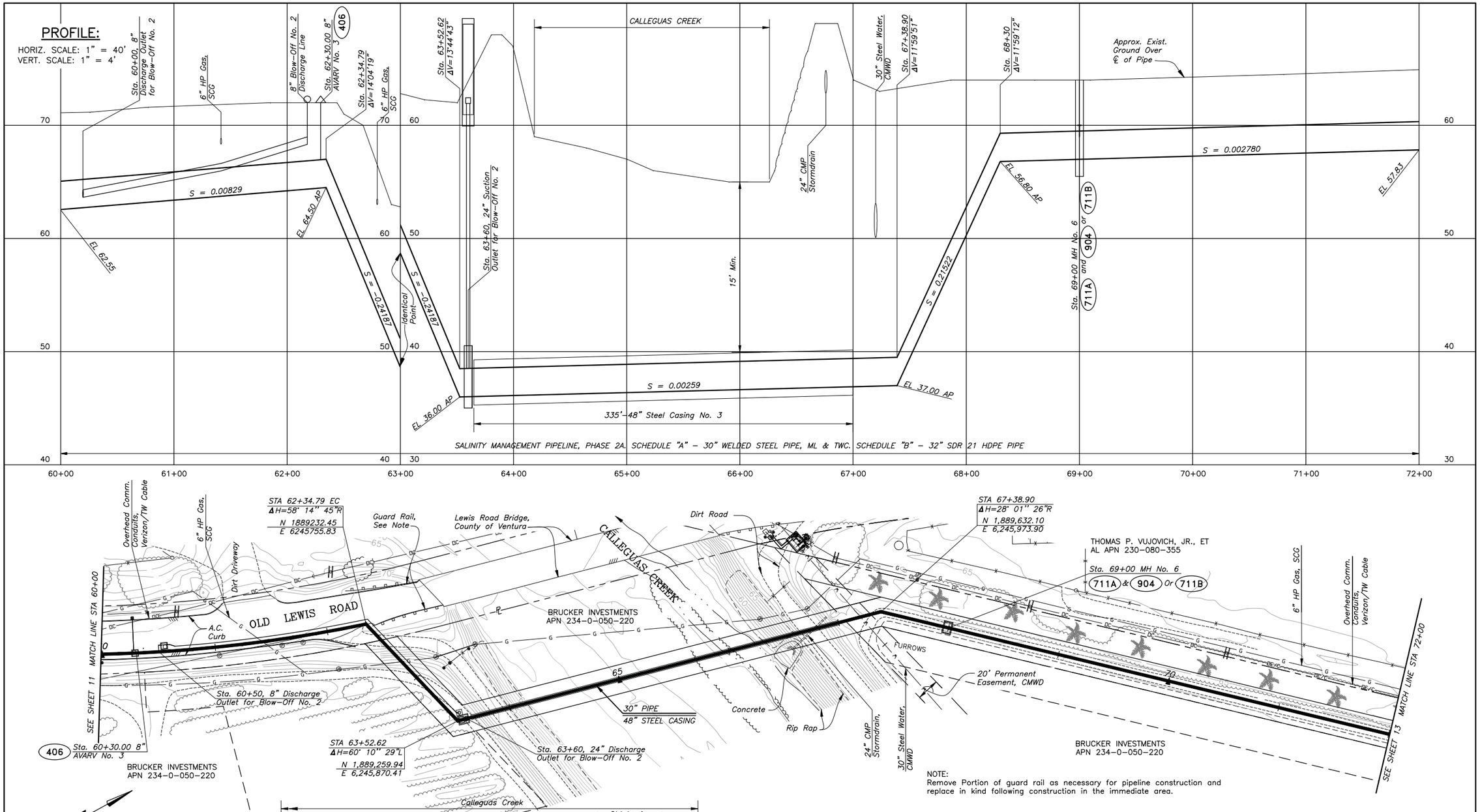

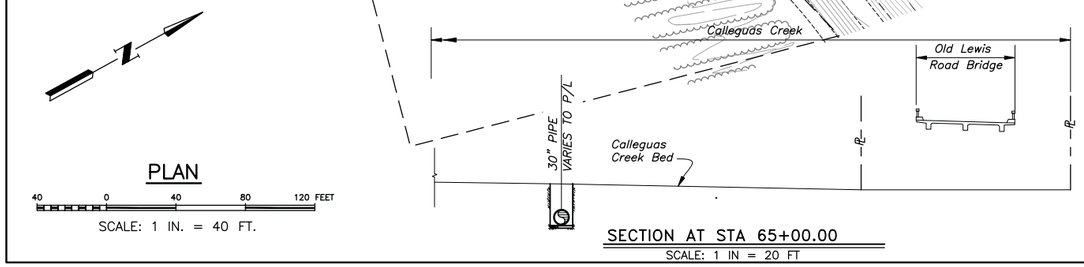

PLAN

40 0 40 80 120 FEET

SCALE: 1 IN. = 40 FT.

SECTION AT STA 65+00.00

SCALE: 1 IN = 20 FT

REVISIONS		
MARK	DATE	DESCRIPTION

DRAFT
NOT FOR CONSTRUCTION
DATE: DECEMBER 22, 2010

REGISTERED PROFESSIONAL ENGINEER REAN DAVID KUNTAG C-54285 Exp. 12-31-11 CIVIL STATE OF CALIFORNIA

CAUTION
0 1"
THIS DRAWING IS TO SCALE ONLY IF BAR MEASURES 1 INCH

PERLITER & INGALSBE
CONSULTING ENGINEERS
ALTADENA, CALIFORNIA

SUBMITTED: FOR THE CONSULTING ENGINEERS R.C.E. NO. 54285
REVIEWED: MANAGER OF ENGINEERING, CALLEGUAS MUNICIPAL WATER DISTRICT
DESIGNED: R.Y.K. DRAWN: ---- CHECKED: R.Y.K.

CALLEGUAS MUNICIPAL WATER DISTRICT
THOUSAND OAKS, CALIFORNIA

SALINITY MANAGEMENT PIPELINE, PHASE 2A

PLAN AND PROFILE
STA 60+00.00 TO 72+00.00

FILE NO.	DATE	SPEC. NO.	SHEET
298/12	DEC 2010	470	12 OF 48 SHEETS

PROFILE:

HORIZ. SCALE: 1" = 40'
VERT. SCALE: 1" = 4'

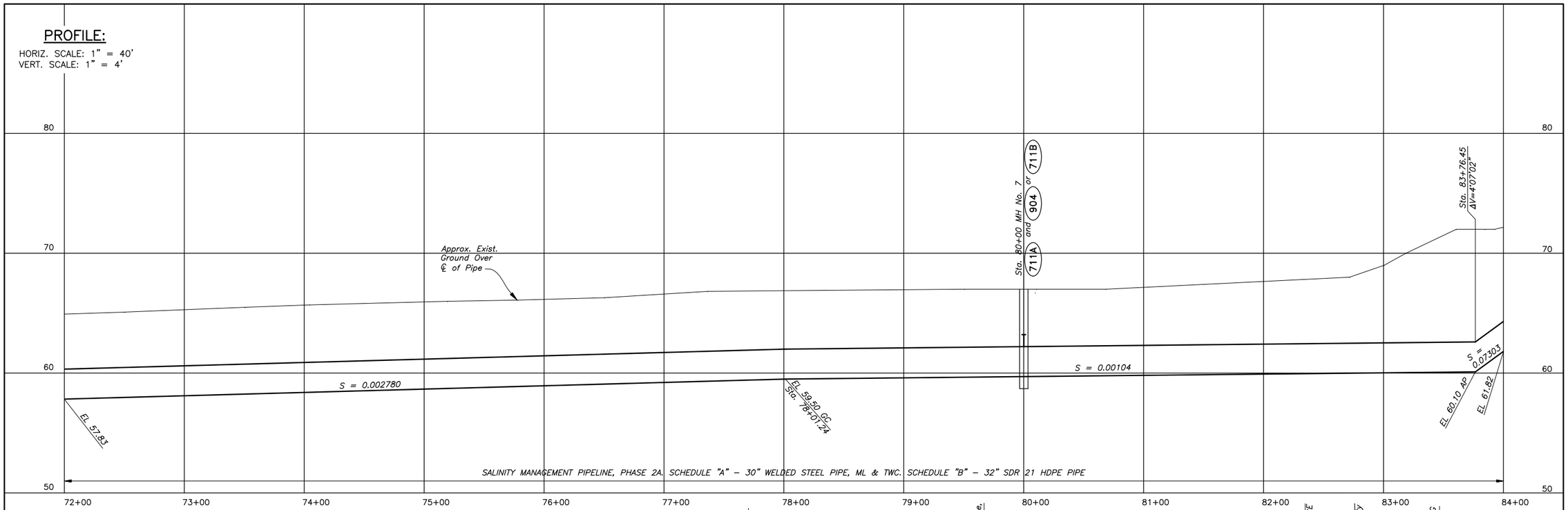

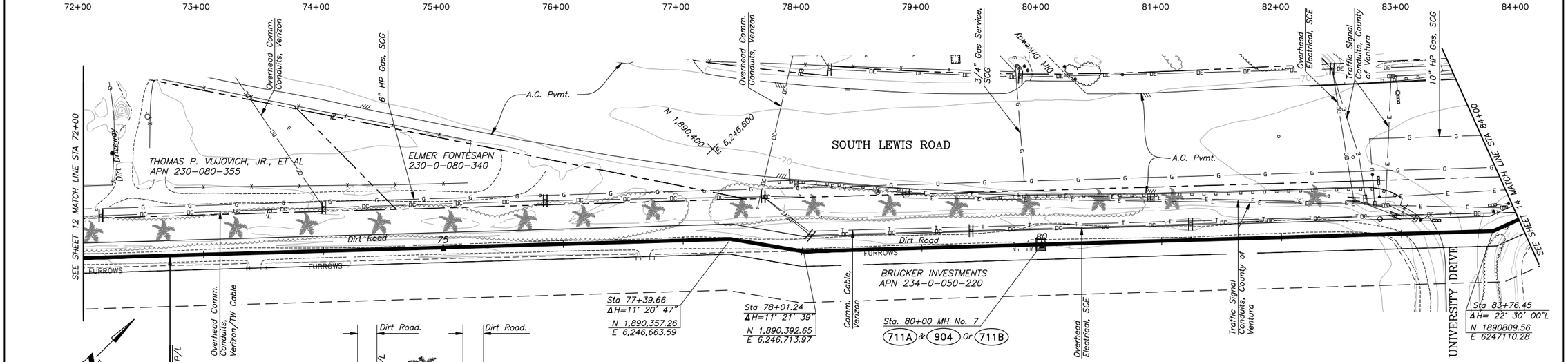

PLAN

40 0 40 80 120 FEET

SCALE: 1 IN. = 40 FT.

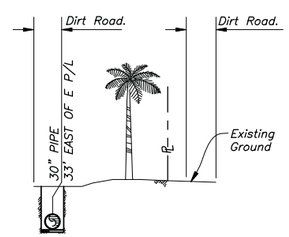

SECTION AT STA 75+00.00

SCALE: 1 IN = 20 FT

REVISIONS		
MARK	DATE	DESCRIPTION

DRAFT
NOT FOR CONSTRUCTION
DATE: DECEMBER 22, 2010

REGISTERED PROFESSIONAL ENGINEER
REAN DAVID KUNTAMER
C-54285
Exp. 12-31-11
CIVIL
STATE OF CALIFORNIA

CAUTION
0 1"
THIS DRAWING IS TO SCALE ONLY IF BAR MEASURES 1 INCH

PERLITER & INGALSBE
CONSULTING ENGINEERS
ALTADENA, CALIFORNIA

SUBMITTED: FOR THE CONSULTING ENGINEERS R.C.E. NO. 54285
REVIEWED: MANAGER OF ENGINEERING, CALLEGUAS MUNICIPAL WATER DISTRICT
DESIGNED: R.Y.K. DRAWN: V.T. CHECKED: R.Y.K.

CALLEGUAS MUNICIPAL WATER DISTRICT
THOUSAND OAKS, CALIFORNIA

SALINITY MANAGEMENT PIPELINE, PHASE 2A

PLAN AND PROFILE
STA 72+00.00 TO 84+00.00

FILE NO.	DATE	SPEC. NO.	SHEET
298/13	DEC 2010	470	13 OF 48 SHEETS

PROFILE:

HORIZ. SCALE: 1" = 40'
VERT. SCALE: 1" = 4'

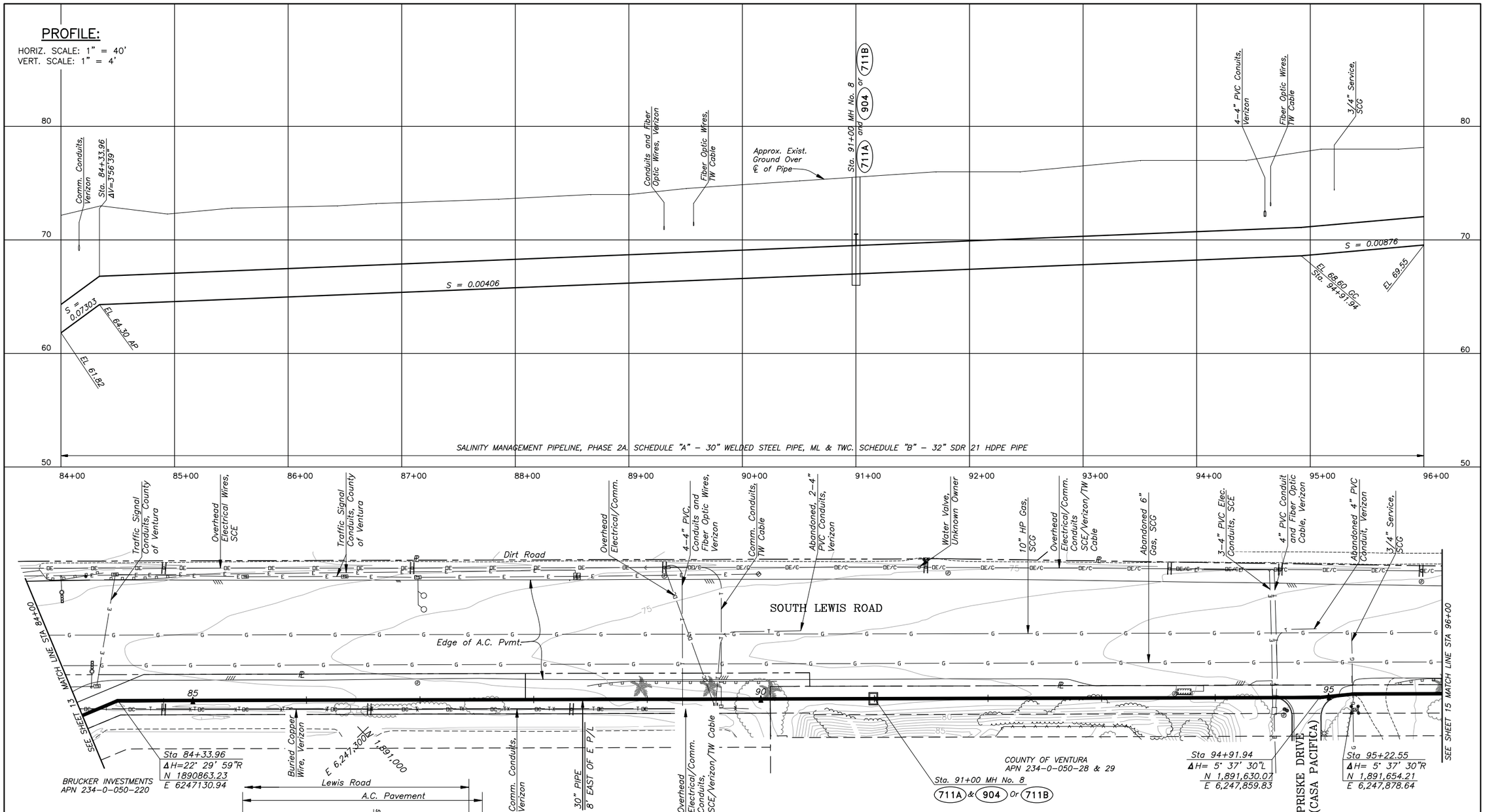

PLAN

40 0 40 80 120 FEET

SCALE: 1 IN. = 40 FT.

SECTION AT STA 91+00.00

SCALE: 1 IN = 20 FT

REVISIONS		
MARK	DATE	DESCRIPTION

DRAFT
NOT FOR CONSTRUCTION
DATE: DECEMBER 22, 2010

REGISTERED PROFESSIONAL ENGINEER
REAN DAVID KUNITANI
C-54285
Exp. 12-31-11
CIVIL
STATE OF CALIFORNIA

CAUTION
0 1"
THIS DRAWING IS TO SCALE ONLY IF BAR MEASURES 1 INCH

PERLITER & INGALSBE
CONSULTING ENGINEERS
ALTADENA, CALIFORNIA

SUBMITTED: FOR THE CONSULTING ENGINEERS R.C.E. NO. 54285
REVIEWED: MANAGER OF ENGINEERING, CALLEGUAS MUNICIPAL WATER DISTRICT
DESIGNED: R.Y.K. DRAWN: ---- CHECKED: R.Y.K.

CALLEGUAS MUNICIPAL WATER DISTRICT
THOUSAND OAKS, CALIFORNIA

SALINITY MANAGEMENT PIPELINE, PHASE 2A

PLAN AND PROFILE
STA 84+00.00 TO 96+00.00

FILE NO.	DATE	SPEC. NO.	SHEET
298/14	DEC 2010	470	14 OF 48 SHEETS

PROFILE:

HORIZ. SCALE: 1" = 40'
VERT. SCALE: 1" = 4'

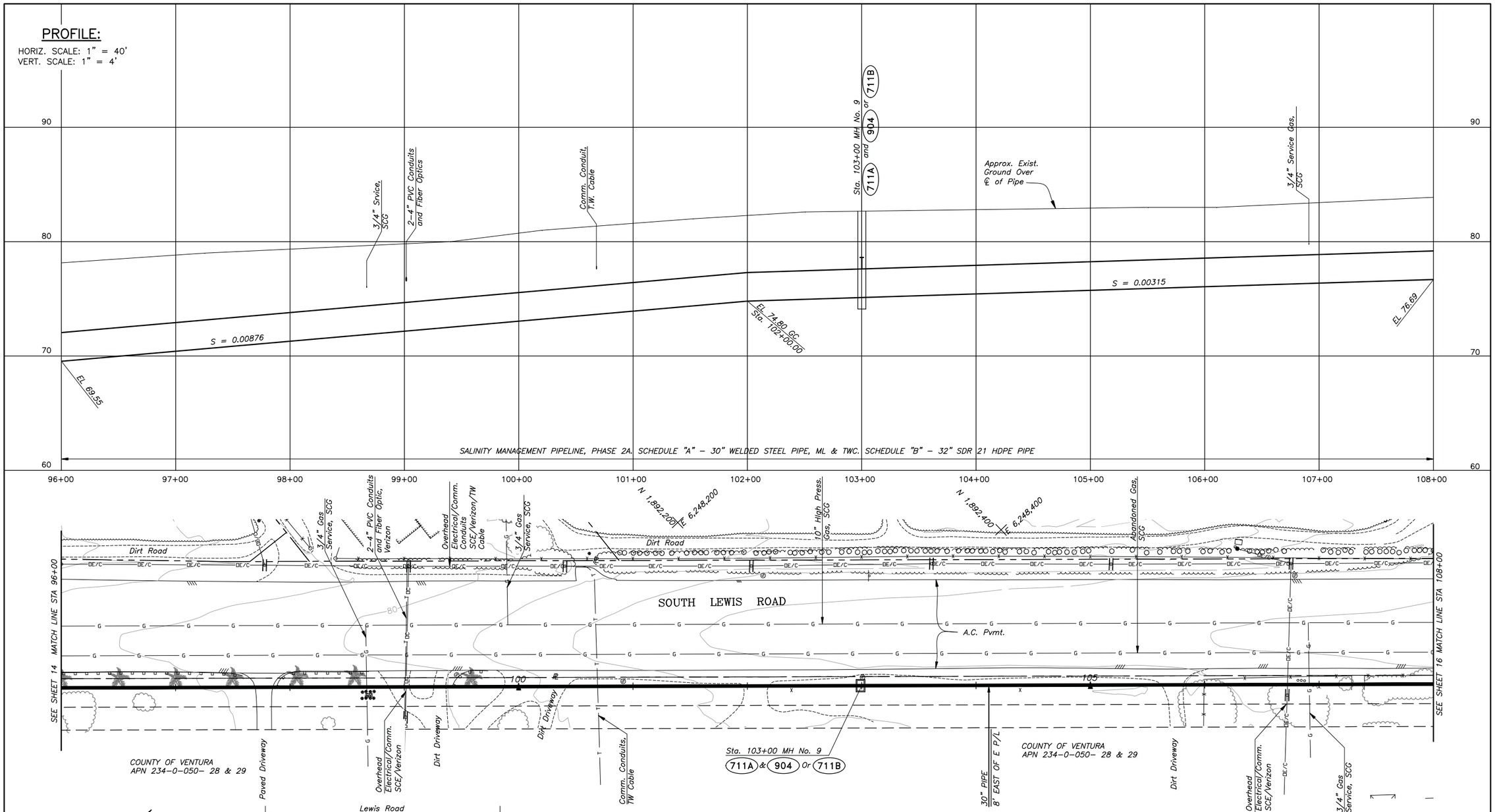

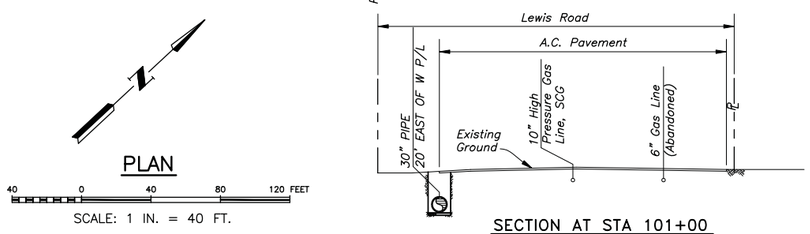

SECTION AT STA 101+00
SCALE: 1 IN = 20 FT

PLAN
40 0 40 80 120 FEET
SCALE: 1 IN. = 40 FT.

REVISIONS		
MARK	DATE	DESCRIPTION

DRAFT
NOT FOR CONSTRUCTION
DATE: DECEMBER 22, 2010

REGISTERED PROFESSIONAL ENGINEER REAN DAVID KUNTAKE C-54285 Exp. 12-31-11 CIVIL STATE OF CALIFORNIA

CAUTION
0 1"
THIS DRAWING IS TO SCALE ONLY IF BAR MEASURES 1 INCH

PERLITER & INGALSBE
CONSULTING ENGINEERS
ALTADENA, CALIFORNIA

SUBMITTED: FOR THE CONSULTING ENGINEERS R.C.E. NO. 54285
REVIEWED: MANAGER OF ENGINEERING, CALLEGUAS MUNICIPAL WATER DISTRICT
DESIGNED: R.Y.K. DRAWN: ---- CHECKED: R.Y.K.

CALLEGUAS MUNICIPAL WATER DISTRICT
THOUSAND OAKS, CALIFORNIA

SALINITY MANAGEMENT PIPELINE, PHASE 2A

PLAN AND PROFILE
STA 96+00.00 TO 108+00.00

FILE NO.	DATE	SPEC. NO.	SHEET 15 OF 48 SHEETS
298/15	DEC 2010	470	

PROFILE:

HORIZ. SCALE: 1" = 40'
VERT. SCALE: 1" = 4'

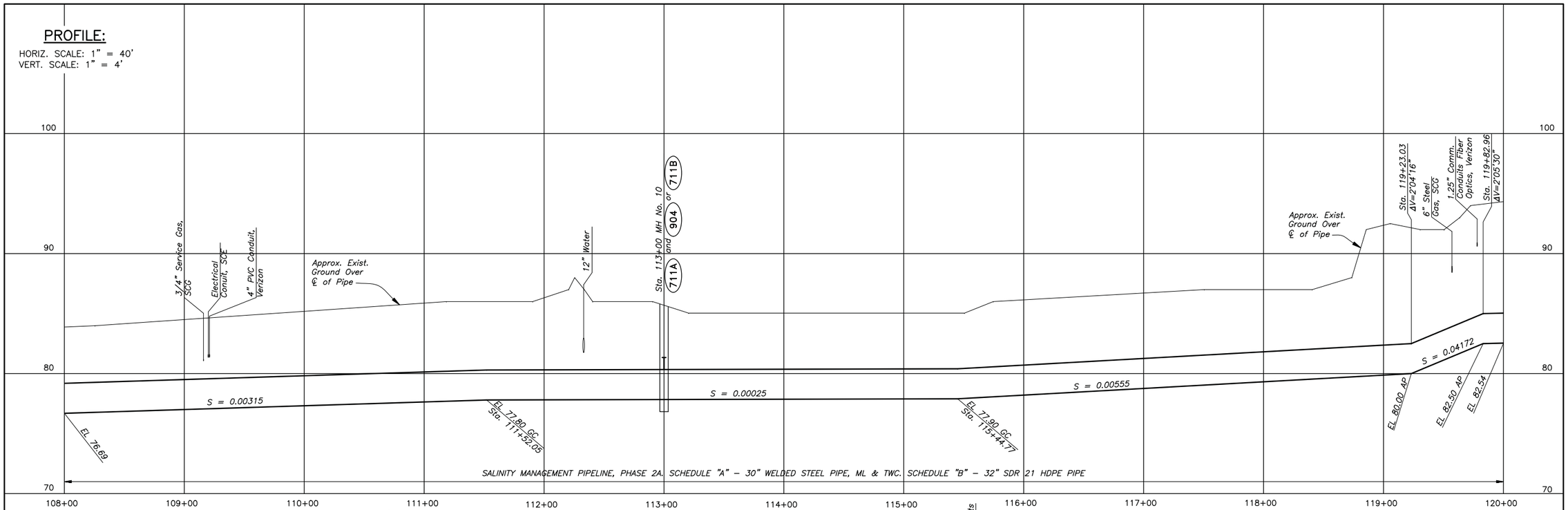

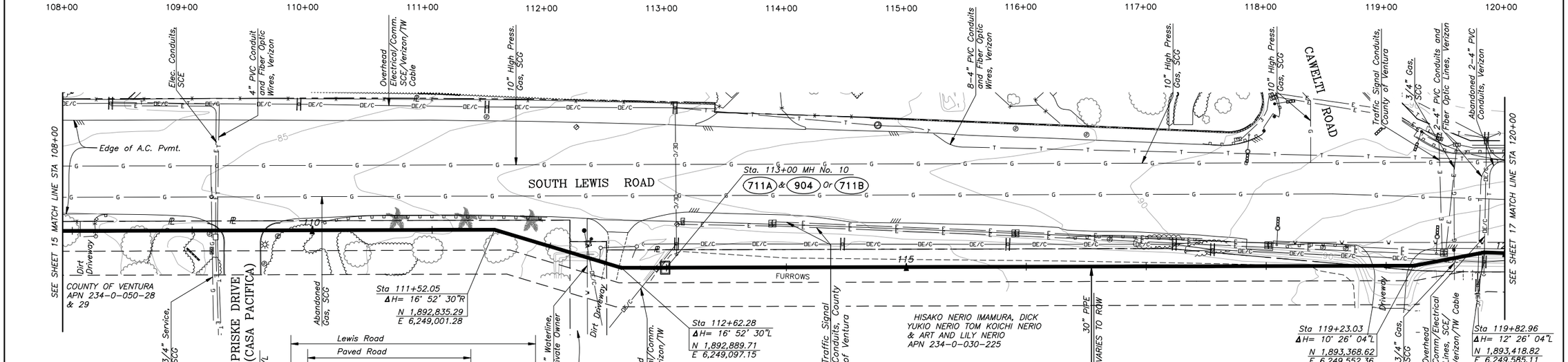

PLAN

40 0 40 80 120 FEET

SCALE: 1 IN. = 40 FT.

SECTION AT STA 111+00

SCALE: 1 IN = 20 FT

REVISIONS		
MARK	DATE	DESCRIPTION

DRAFT
NOT FOR CONSTRUCTION
DATE: DECEMBER 22, 2010

REGISTERED PROFESSIONAL ENGINEER
REAN DAVID KUNITANI
C-54285
Exp. 12-31-11
CIVIL
STATE OF CALIFORNIA

CAUTION
0 1"
THIS DRAWING IS TO SCALE ONLY IF BAR MEASURES 1 INCH

PERLITER & INGALSBE
CONSULTING ENGINEERS
ALTADENA, CALIFORNIA

SUBMITTED: FOR THE CONSULTING ENGINEERS R.C.E. NO. 54285
REVIEWED: MANAGER OF ENGINEERING, CALLEGUAS MUNICIPAL WATER DISTRICT
DESIGNED: R.Y.K. DRAWN: ---- CHECKED: R.Y.K.

CALLEGUAS MUNICIPAL WATER DISTRICT
THOUSAND OAKS, CALIFORNIA

SALINITY MANAGEMENT PIPELINE, PHASE 2A

PLAN AND PROFILE
STA 108+00.00 TO 120+00.00

FILE NO.	DATE	SPEC. NO.	SHEET 16 OF 48 SHEETS
298/16	DEC 2010	470	

PROFILE:

HORIZ. SCALE: 1" = 40'
VERT. SCALE: 1" = 4'

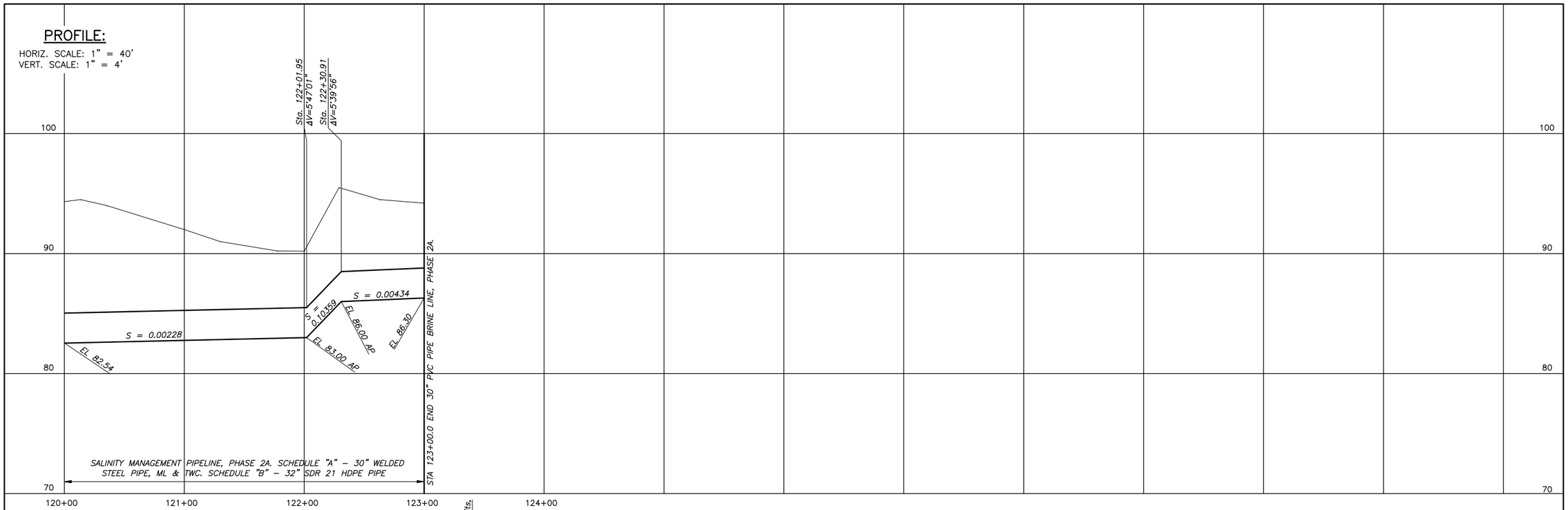

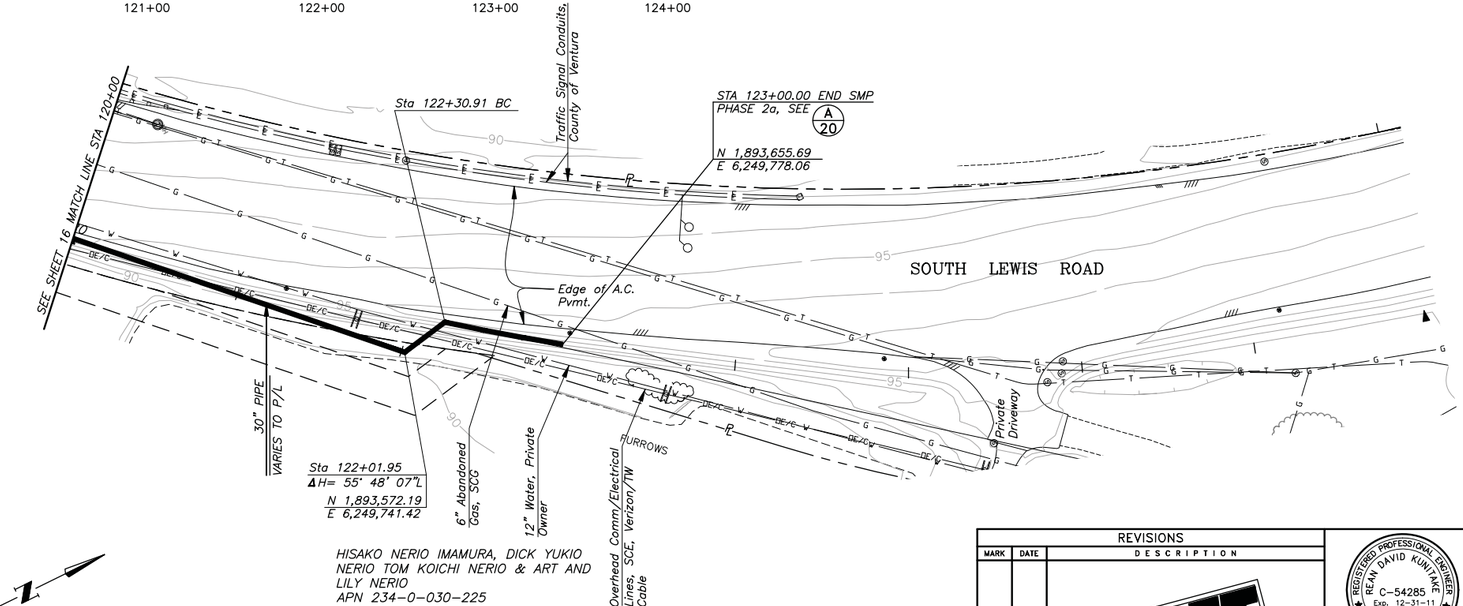

PLAN

40 0 40 80 120 FEET

SCALE: 1 IN. = 40 FT.

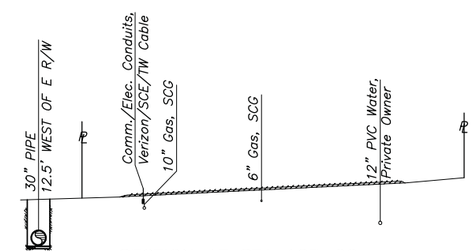

SECTION AT STA 123+00

SCALE: 1 IN. = 20 FT.

REVISIONS		
MARK	DATE	DESCRIPTION

DRAFT
NOT FOR CONSTRUCTION
DATE: DECEMBER 22, 2010

REGISTERED PROFESSIONAL ENGINEER
REAN DAVID KUNITAKE
C-54285
Exp. 12-31-11
CIVIL
STATE OF CALIFORNIA

CAUTION
0 1"
THIS DRAWING IS TO SCALE ONLY IF BAR MEASURES 1 INCH

PERLITER & INGALSBE
CONSULTING ENGINEERS
ALTADENA, CALIFORNIA

SUBMITTED: FOR THE CONSULTING ENGINEERS R.C.E. NO. 54285
REVIEWED: MANAGER OF ENGINEERING, CALLEGUAS MUNICIPAL WATER DISTRICT
DESIGNED: R.Y.K. DRAWN: ---- CHECKED: R.Y.K.

CALLEGUAS MUNICIPAL WATER DISTRICT
THOUSAND OAKS, CALIFORNIA

SALINITY MANAGEMENT PIPELINE, PHASE 2A

PLAN AND PROFILE
STA 120+00.00 TO 123+00

FILE NO.	DATE	SPEC. NO.	SHEET 17 OF 48 SHEETS
298/17	DEC 2010	470	

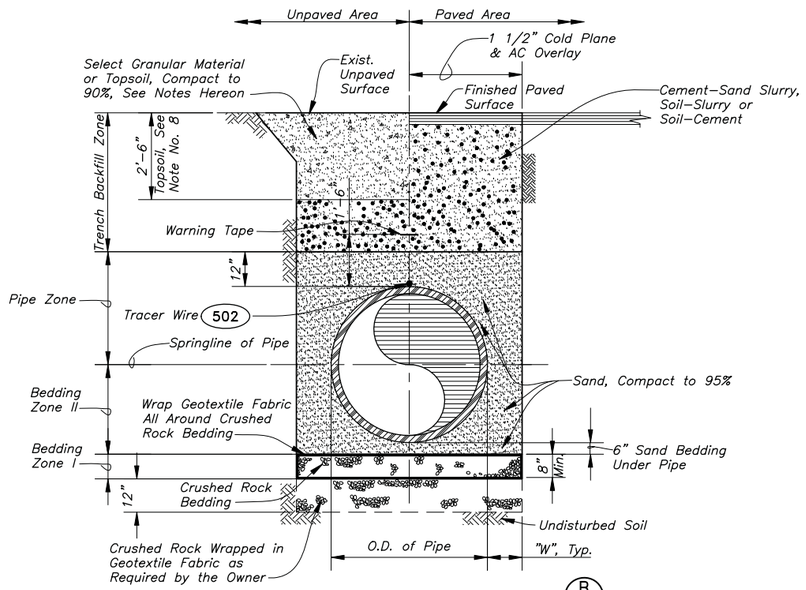

30–INCH HDPE PIPE TRENCH SECTION (B)

NOT TO SCALE

PIPE TRENCHING NOTES:

1. Provide vertical trench walls supported by sheeting, shoring and bracing as required to protect parallel utilities and workers and to maintain traffic.
2. Sloping trench walls may be allowed at the discretion of the Owner except for locations where Note 1 governs. Contractor to submit proposed trench section details and shoring plan(s) for approval prior to beginning any excavation.
3. Resurface roads, driveways, and walkways in accordance with the Contract Documents and requirements by the local agency having jurisdiction.
4. Contractor shall provide safe means for conducting soils testing and inspection as required by the Owner or his representative.
5. Geotextile filter fabric shall have a minimum of 12" lap at all edges.
6. Width "W" shall be as shown in the table below.

Pipe Size	"W" Minimum	"W" Maximum
12" and Smaller	6"	9"
36" and Larger	18"	24"

   a) The Contractor shall acquire approval from the Owner if Contractor desires a "W" outside of the limits shown in Table above.

   b) Larger "W" shall be provided as required to facilitate the connection of two pipes within the trench, casing installation, manhole construction and other similar work. In no case shall the widths indicated in these Plans for temporary traffic control lanes be less than the required minimum.

7. See this sheet for approximate thicknesses of existing pavement(s).
8. In agricultural farm land, replace existing depth or top 2.5' minimum, whichever is greater, of ground with recovered or imported topsoil. Other unpaved areas to receive 2.5' of select granular material. Recovered topsoil shall be stored separately from other stockpiles or surplus spoil.

TRENCH SECTION (A)

NOT TO SCALE

REVISIONS

MARK	DATE	DESCRIPTION

DRAFT
NOT FOR CONSTRUCTION
DATE: DECEMBER 22, 2010

REGISTERED PROFESSIONAL ENGINEER
REAN DAVID KUNTANG
C–54285
Exp. 12–31–11
CIVIL
STATE OF CALIFORNIA

CAUTION
0 1"
THIS DRAWING IS TO SCALE ONLY IF BAR MEASURES 1 INCH

PERLITER & INGALSBE
CONSULTING ENGINEERS
ALTADENA, CALIFORNIA

SUBMITTED: FOR THE CONSULTING ENGINEERS R.C.E. NO. 54285
REVIEWED: MANAGER OF ENGINEERING, CALLEGUAS MUNICIPAL WATER DISTRICT
DESIGNED: R.Y.K. DRAWN: V.T. CHECKED: R.Y.K.

CALLEGUAS MUNICIPAL WATER DISTRICT
THOUSAND OAKS, CALIFORNIA
SALINITY MANAGEMENT PIPELINE, PHASE 2A
TRENCH SECTION

FILE NO.	DATE	SPEC. NO.	SHEET
298/18	DEC 2010	470	18 OF 48 SHEETS

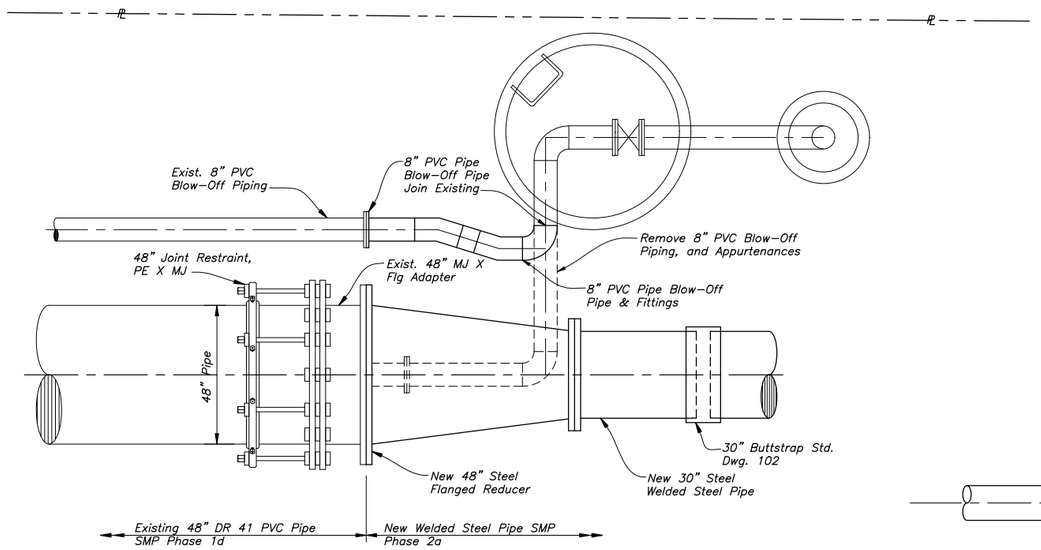

CONNECTION DETAIL (A/07)

SCALE: 1/2 IN = 1 FT

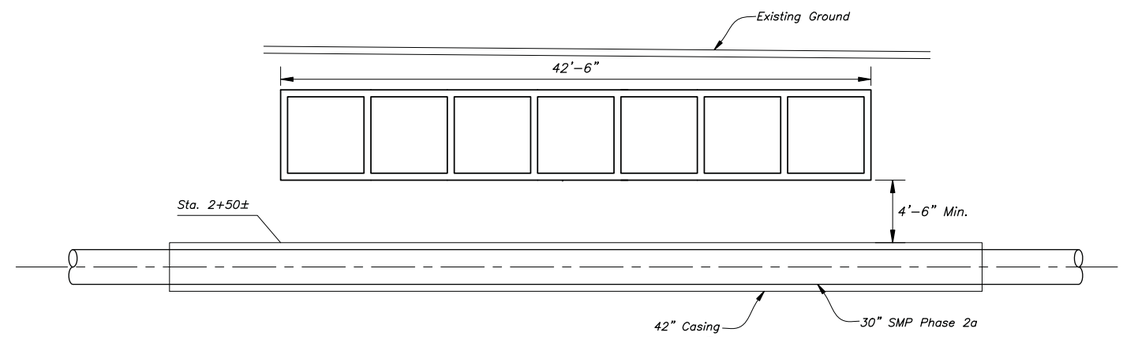

72-IN SOMIS DRAIN SECTION (A/07)

NOT TO SCALE

REVISIONS		
MARK	DATE	DESCRIPTION

DRAFT
NOT FOR CONSTRUCTION
DATE: DECEMBER 22, 2010

REGISTERED PROFESSIONAL ENGINEER
REAN DAVID KUNITME
C-54285
Exp. 12-31-11
CIVIL
STATE OF CALIFORNIA

CAUTION
0 1"
THIS DRAWING IS TO SCALE ONLY IF BAR MEASURES 1 INCH

PERLITER & INGALSBE
CONSULTING ENGINEERS
ALTADENA, CALIFORNIA

SUBMITTED: FOR THE CONSULTING ENGINEERS R.C.E. NO. 54285
REVIEWED: MANAGER OF ENGINEERING, CALLEGUAS MUNICIPAL WATER DISTRICT
DESIGNED: R.Y.K. DRAWN: V.T. CHECKED: R.Y.K.

CALLEGUAS MUNICIPAL WATER DISTRICT
THOUSAND OAKS, CALIFORNIA

SALINITY MANAGEMENT PIPELINE, PHASE 2A

CONNECTION DETAIL AND 72-IN SOMIS DRAIN SECTION

FILE NO.	DATE	SPEC. NO.	SHEET 19 OF 48 SHEETS
298/19	DEC 2010	470	

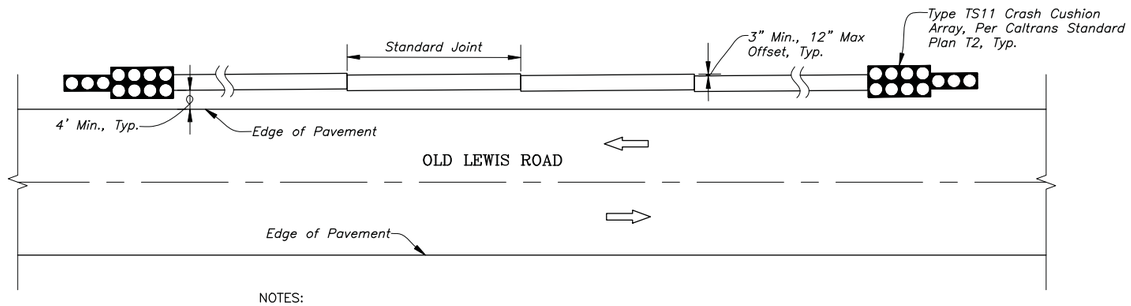

NOTES:

1. Pipe stored along Old Lewis Road shall be placed outside the paved area within public rights-of-way in the offset method shown. Exposed pipe edge shall not face the nearest traffic lane.

2. Any exposed end of the pipe shall be protected with a TS11 crash cushion array.

PIPE STRINGING LAYOUT (A)

NOT TO SCALE

REVISIONS		
MARK	DATE	DESCRIPTION

DRAFT
NOT FOR CONSTRUCTION
DATE: DECEMBER 22, 2010

REGISTERED PROFESSIONAL ENGINEER
REAN DAVID KUNITAKE
C-54285
Exp. 12-31-11
CIVIL
STATE OF CALIFORNIA

CAUTION
0 1"
THIS DRAWING IS TO SCALE ONLY IF BAR MEASURES 1 INCH

PERLITER & INGALSBE
CONSULTING ENGINEERS
ALTADENA, CALIFORNIA

SUBMITTED: FOR THE CONSULTING ENGINEERS R.C.E. NO. 54285
REVIEWED: MANAGER OF ENGINEERING, CALLEGUAS MUNICIPAL WATER DISTRICT
DESIGNED: R.Y.K. DRAWN: V.T. CHECKED: R.Y.K.

CALLEGUAS MUNICIPAL WATER DISTRICT
THOUSAND OAKS, CALIFORNIA
SALINITY MANAGEMENT PIPELINE, PHASE 2A
PIPE STRINGING LAYOUT

FILE NO.	DATE	SPEC. NO.	SHEET
298/20	DEC 2010	470	20 OF 48 SHEETS

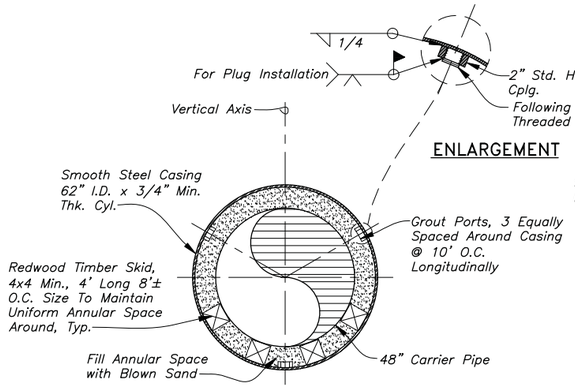

SECTION B

NOTE:
1. Adjoining casing sections may be welded or installed with Permalok as manufactured by Permalok Corp. or approved equivalent.

STEEL CASING DETAILS A

SCALE: 1/2 IN. = 1 FT.

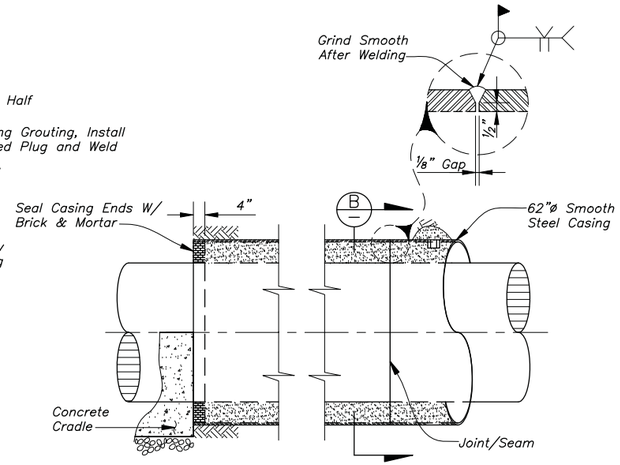

PROFILE C

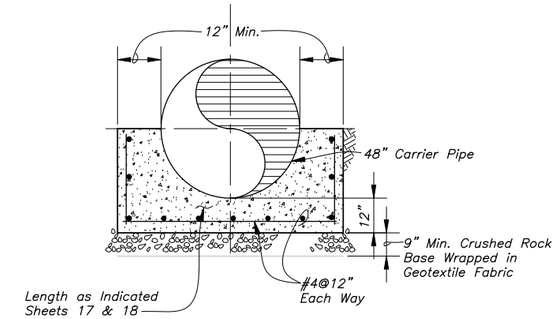

CONCRETE CRADLE SECTION D

NOT TO SCALE

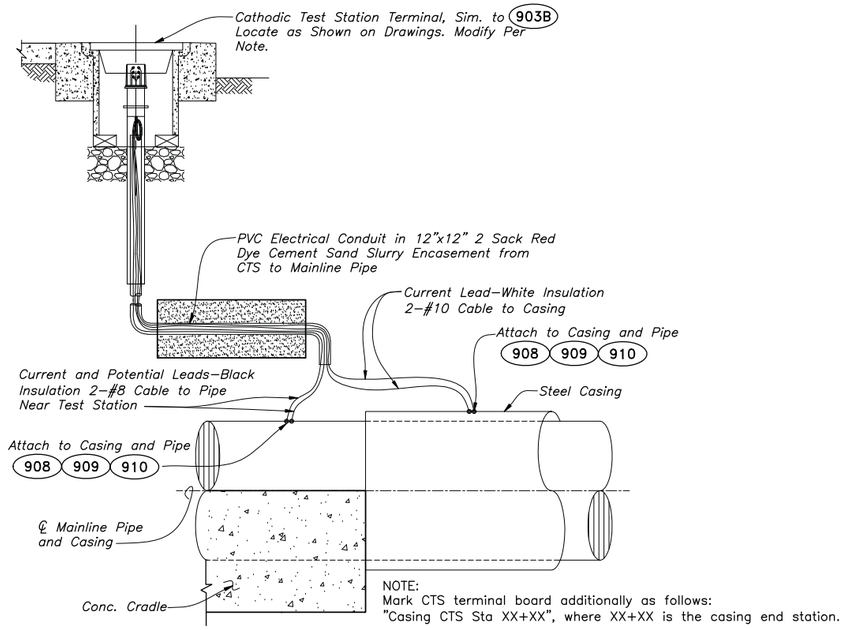

NOTE:
Mark CTS terminal board additionally as follows:
"Casing CTS Sta XX+XX", where XX+XX is the casing end station.

CATHODIC TEST STATION PLACEMENT ON CASING PIPE E

NOT TO SCALE

REVISIONS		
MARK	DATE	DESCRIPTION

DRAFT
NOT FOR CONSTRUCTION
DATE: DECEMBER 22, 2010

REGISTERED PROFESSIONAL ENGINEER
REAN DAVID KUNITAKE
C-54285
Exp. 12-31-11
CIVIL
STATE OF CALIFORNIA

CAUTION
0 1"
THIS DRAWING IS TO SCALE ONLY IF BAR MEASURES 1 INCH

PERLITER & INGALSBE
CONSULTING ENGINEERS
ALTADENA, CALIFORNIA

SUBMITTED: FOR THE CONSULTING ENGINEERS R.C.E. NO. 54285
REVIEWED: MANAGER OF ENGINEERING, CALLEGUAS MUNICIPAL WATER DISTRICT
DESIGNED: R.Y.K. DRAWN: V.T. CHECKED: R.Y.K.

CALLEGUAS MUNICIPAL WATER DISTRICT
THOUSAND OAKS, CALIFORNIA

SALINITY MANAGEMENT PIPELINE, PHASE 2A

CASING DETAIL AND CONCRETE CRADLE SECTION

FILE NO.	DATE	SPEC. NO.	SHEET
298/22	DEC 2010	470	22 OF 48 SHEETS

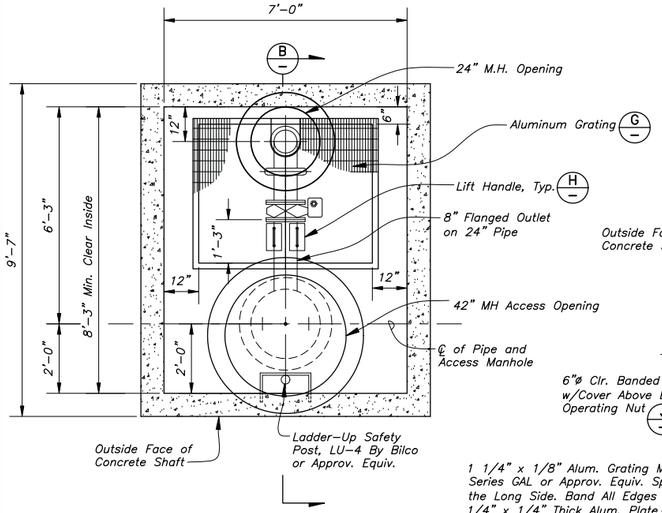

PLAN

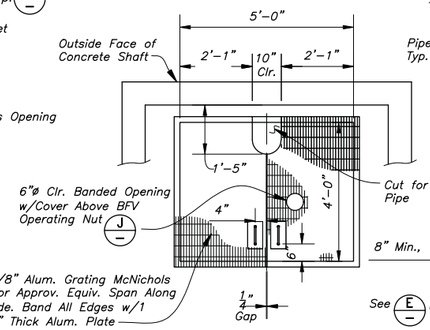

DETAIL G

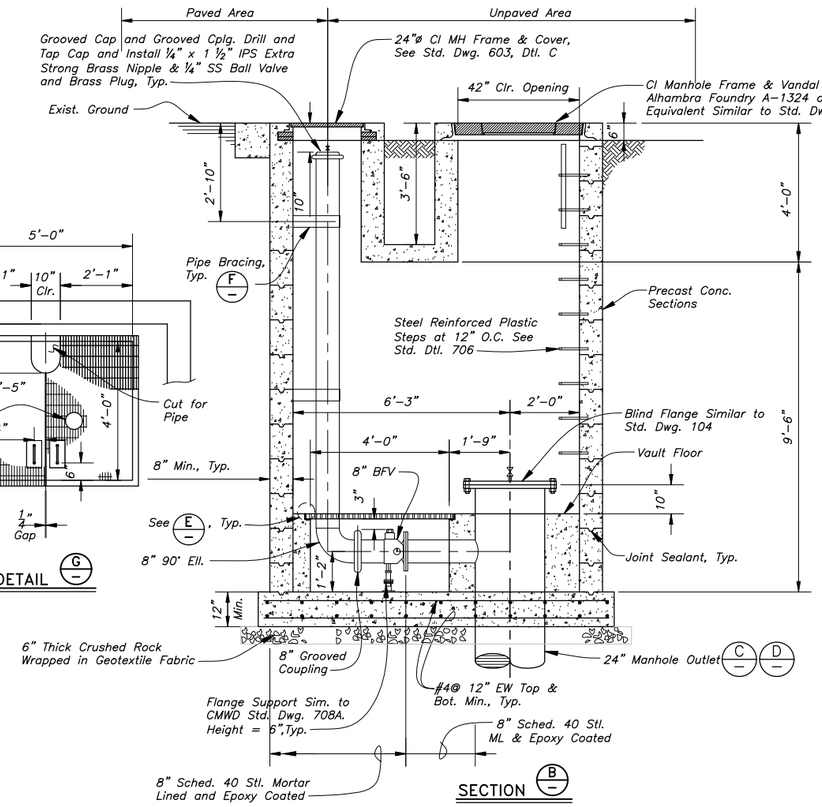

SECTION B

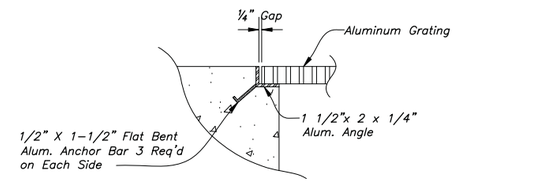

DETAIL E

SCALE: 2 IN = 1 FT

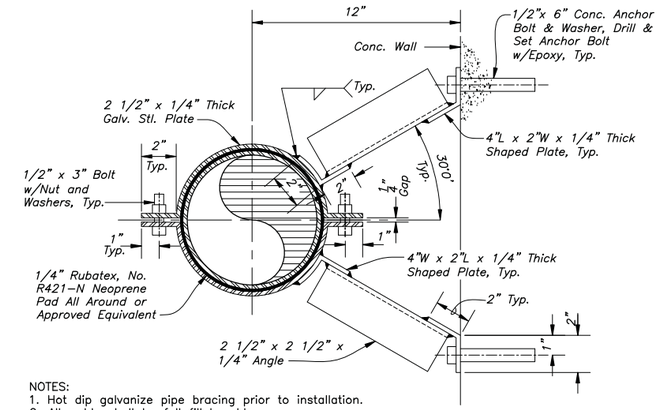

NOTES:
1. Hot dip galvanize pipe bracing prior to installation.
2. All welds shall be full fillet welds.

PIPE BRACING DETAIL F

SCALE: 3 IN = 1 FT

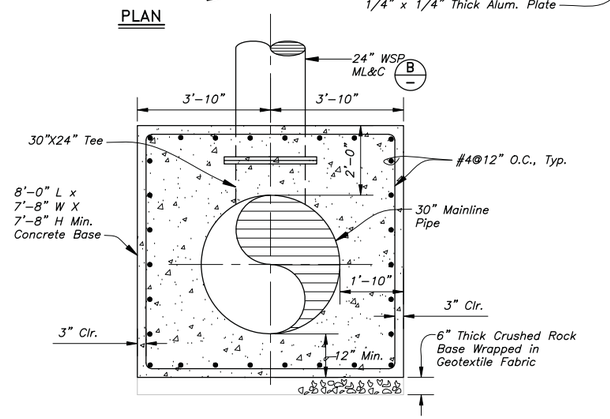

SECTION C

NOTE:
This section detail applies to Blow-off No. 2.

BLOW-OFF SUCTION MH A

SCALE: 1/2 IN = 1 FT

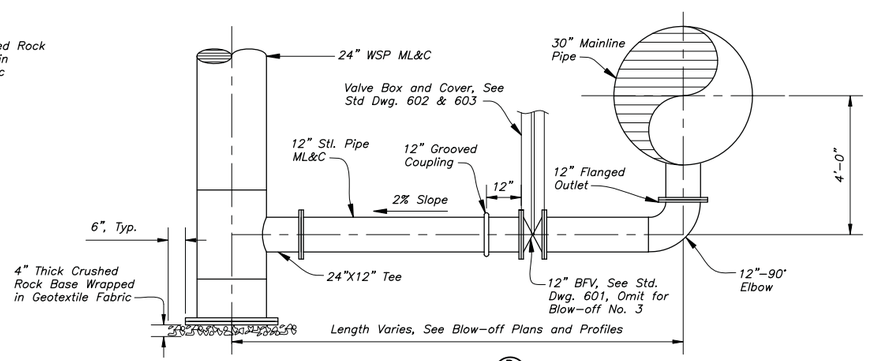

SECTION D

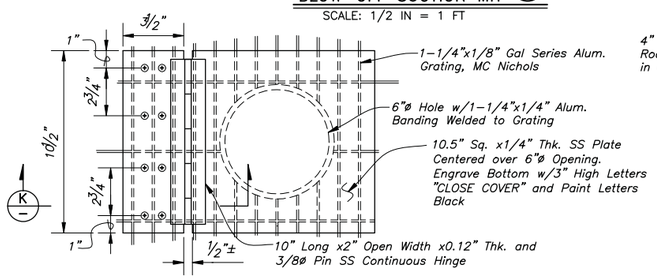

VALVE ACCESS COVER DETAIL J

SCALE: 3 IN = 1 FT

NOTE:
Grind smooth all sharp edges on top plate and cover.

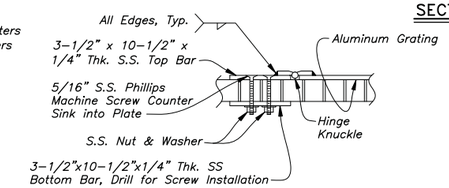

VALVE ACCESS COVER SECTION K

SCALE: 3 IN = 1 FT

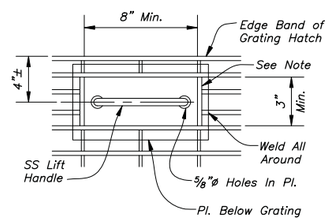

PLAN

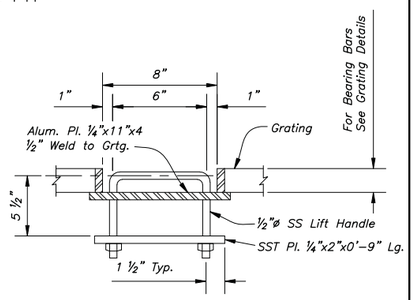

SECTION

NOTE:
Band edges of grating opening with a bar of the same depth and thickness as bearing bars.

LIFT HANDLE H

NOT TO SCALE

REVISIONS		
MARK	DATE	DESCRIPTION

DRAFT
NOT FOR CONSTRUCTION
DATE: DECEMBER 22, 2010

REGISTERED PROFESSIONAL ENGINEER REAN DAVID KUNTZMAN C-54285 Exp. 12-31-11 CIVIL STATE OF CALIFORNIA

CAUTION
0 1"
THIS DRAWING IS TO SCALE ONLY IF BAR MEASURES 1 INCH

PERLITER & INGALSBE
CONSULTING ENGINEERS
ALTADENA, CALIFORNIA

SUBMITTED: FOR THE CONSULTING ENGINEERS R.C.E. NO. 54285
REVIEWED: MANAGER OF ENGINEERING, CALLEGUAS MUNICIPAL WATER DISTRICT
DESIGNED: R.Y.K. DRAWN: V.T. CHECKED: R.Y.K.

CALLEGUAS MUNICIPAL WATER DISTRICT
THOUSAND OAKS, CALIFORNIA

SALINITY MANAGEMENT PIPELINE, PHASE 2A

BLOW-OFF DETAILS

FILE NO.	DATE	SPEC. NO.	SHEET
298/23	DEC 2010	470	23 OF 48 SHEETS

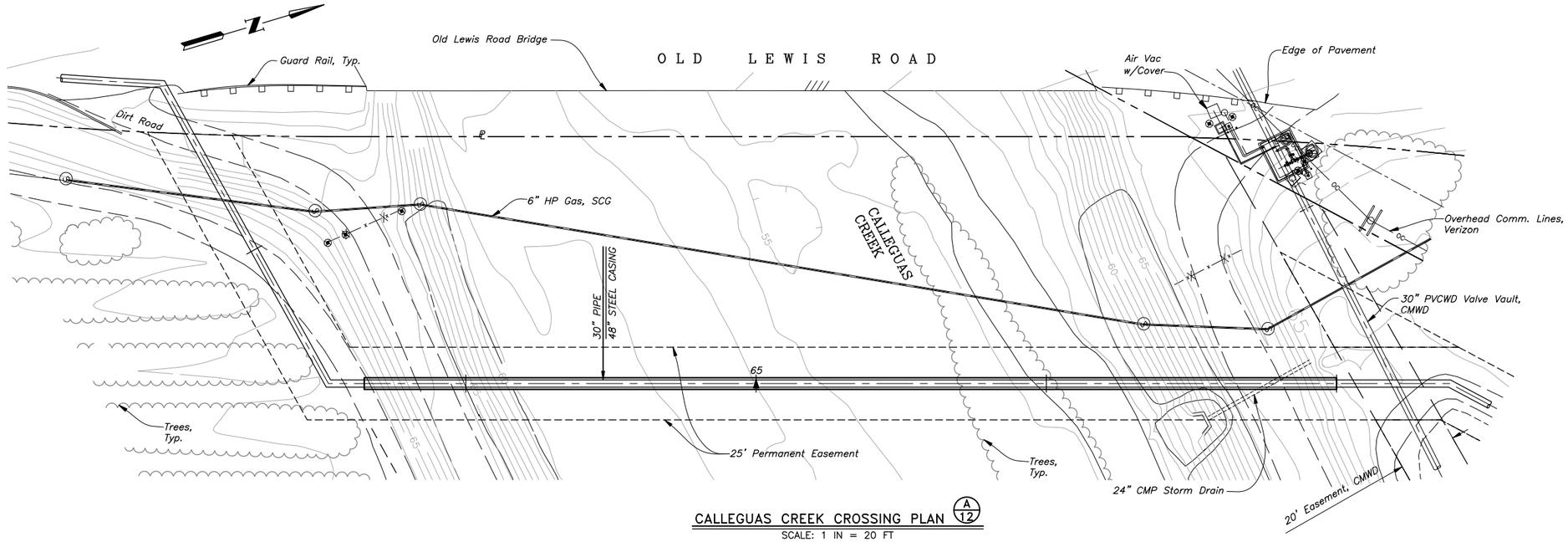

CALLEGUAS CREEK CROSSING PLAN (A/12)

SCALE: 1 IN = 20 FT

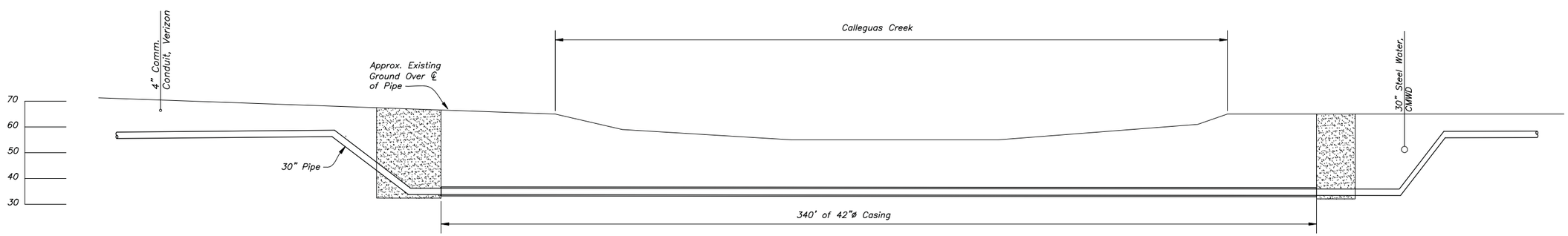

CALLEGUAS CREEK CROSSING PROFILE (B/12)

SCALE: 1 IN = 20 FT

REVISIONS		
MARK	DATE	DESCRIPTION

DRAFT
NOT FOR CONSTRUCTION
DATE: DECEMBER 22, 2010

REGISTERED PROFESSIONAL ENGINEER
REAN DAVID KUNITANE
C-54285
Exp. 12-31-11
CIVIL
STATE OF CALIFORNIA

CAUTION
0 1"
THIS DRAWING IS TO SCALE ONLY IF BAR MEASURES 1 INCH

PERLITER & INGALSBE
CONSULTING ENGINEERS
ALTADENA, CALIFORNIA

SUBMITTED: FOR THE CONSULTING ENGINEERS R.C.E. NO. 54285
REVIEWED: MANAGER OF ENGINEERING, CALLEGUAS MUNICIPAL WATER DISTRICT
DESIGNED: R.Y.K. DRAWN: V.T. CHECKED: R.Y.K.

CALLEGUAS MUNICIPAL WATER DISTRICT
THOUSAND OAKS, CALIFORNIA

SALINITY MANAGEMENT PIPELINE, PHASE 2A

CALLEGUAS CREEK CROSSING PLAN AND PROFILE

FILE NO.	DATE	SPEC. NO.	SHEET
298/25	DEC 2010	470	25 OF 48 SHEETS

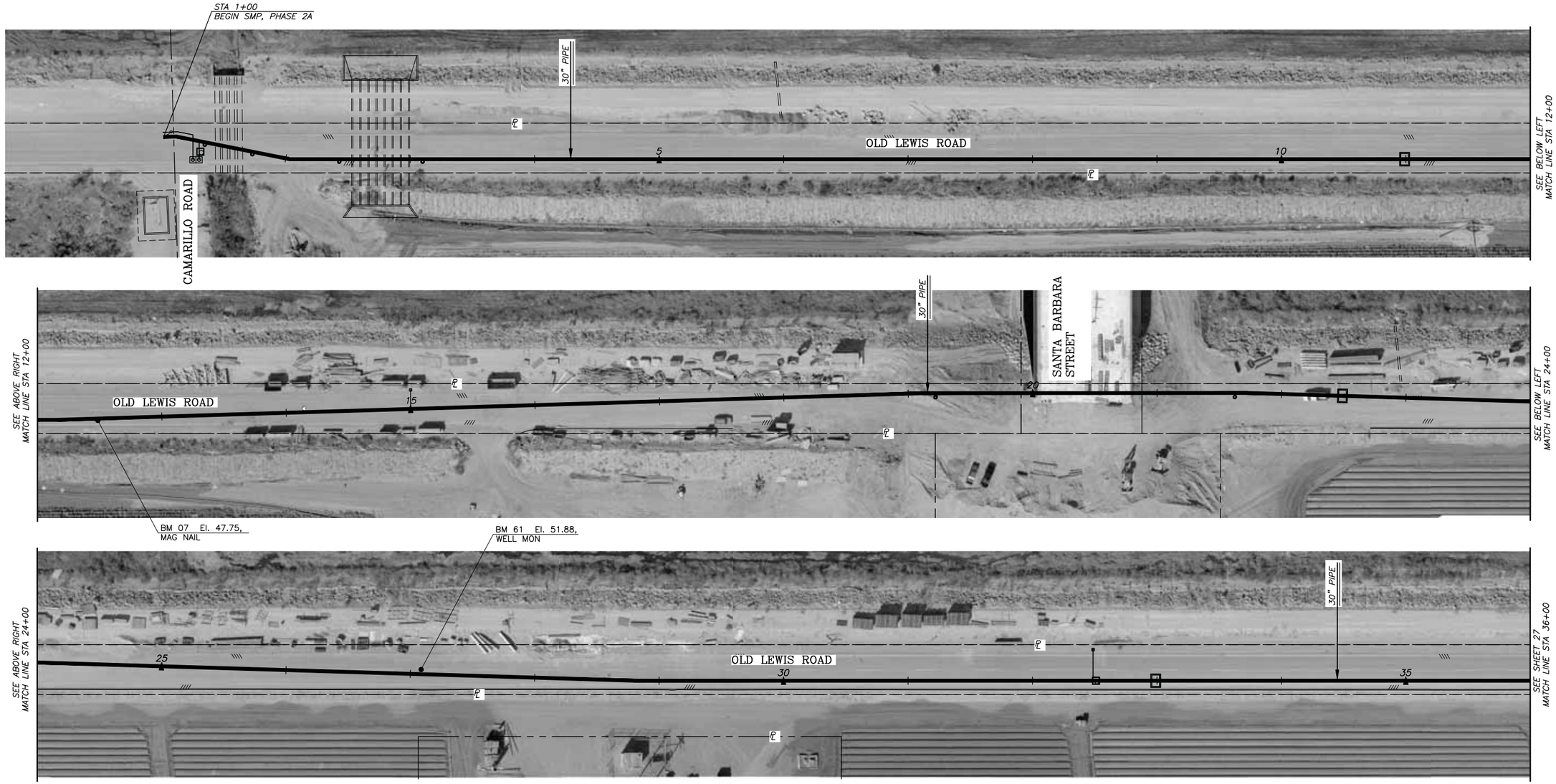

TEMPORARY BENCHMARKS	NORTH	EAST	ELEVATION	DESCRIPTION
TBM 07	1,885,672.236	6,242,318.133	47.75	MAG NAIL
TBM 61	1,886,736.747	6,243,316.702	51.88	WELL MON

PLAN

40 0 40 80 120 FEET

SCALE: 1 IN. = 40 FT.

REVISIONS

MARK	DATE	DESCRIPTION

DRAFT
NOT FOR CONSTRUCTION
DATE: DECEMBER 22, 2010

REGISTERED PROFESSIONAL ENGINEER
REAN DAVID KUNTAMAN
C-54285
Exp. 12-31-11
CIVIL
STATE OF CALIFORNIA

CAUTION
0 1"
THIS DRAWING IS TO SCALE ONLY IF BAR MEASURES 1 INCH

PERLITER & INGALSBE
CONSULTING ENGINEERS
ALTADENA, CALIFORNIA

SUBMITTED: FOR THE CONSULTING ENGINEERS R.C.E. NO. 54285
REVIEWED: MANAGER OF ENGINEERING, CALLEGUAS MUNICIPAL WATER DISTRICT
DESIGNED: R.Y.K. DRAWN: V.T./J.S. CHECKED: R.Y.K.

CALLEGUAS MUNICIPAL WATER DISTRICT
THOUSAND OAKS, CALIFORNIA

SALINITY MANAGEMENT PIPELINE, PHASE 2A

PHOTO PLANS
STA 1+00.00 TO STA 36+00.00

FILE NO.	DATE	SPEC. NO.	SHEET
298/26	DEC 2010	470	26 OF 48 SHEETS

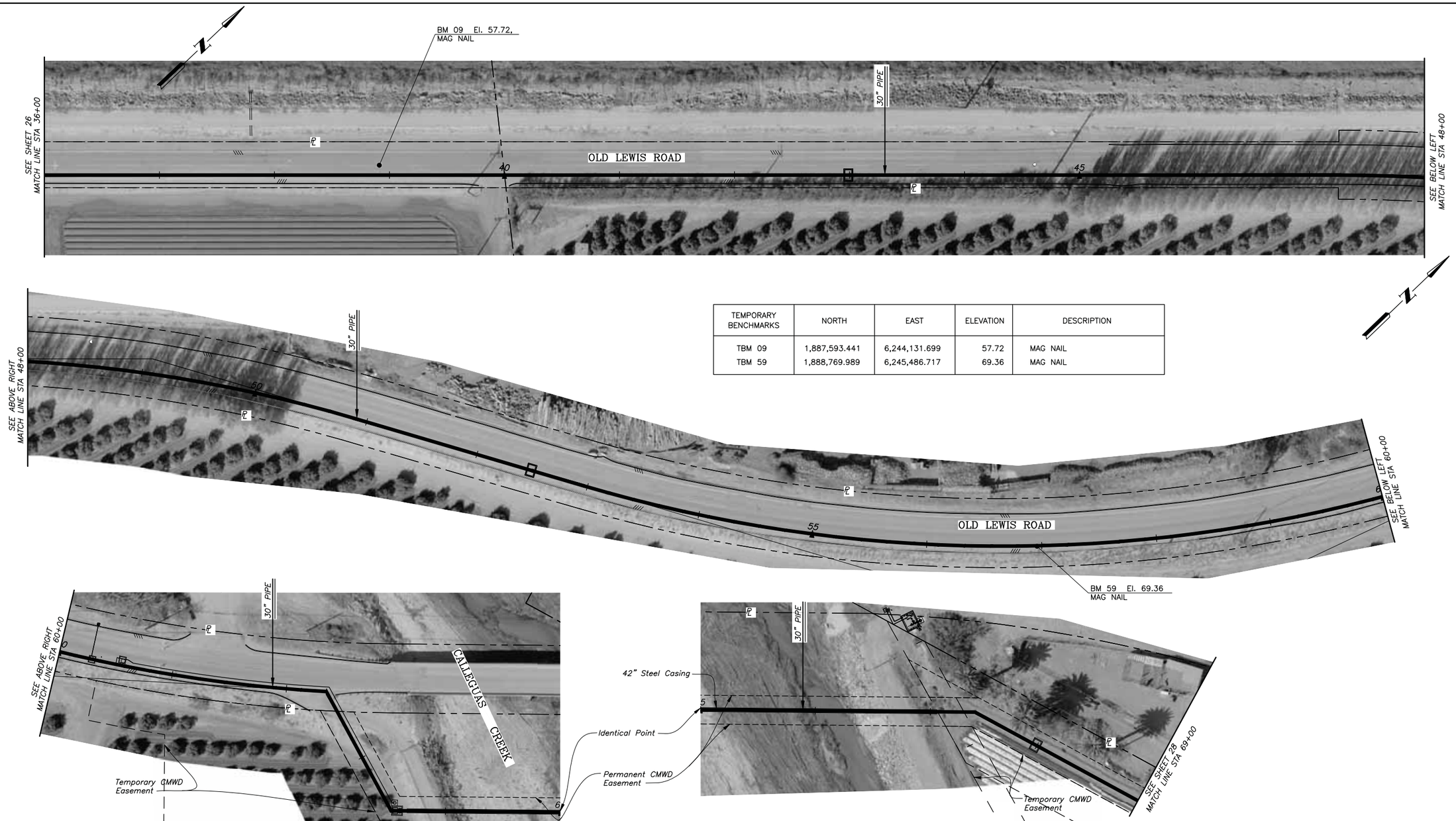

TEMPORARY BENCHMARKS	NORTH	EAST	ELEVATION	DESCRIPTION
TBM 09	1,887,593.441	6,244,131.699	57.72	MAG NAIL
TBM 59	1,888,769.989	6,245,486.717	69.36	MAG NAIL

REVISIONS		
MARK	DATE	DESCRIPTION

DRAFT
NOT FOR CONSTRUCTION
DATE: DECEMBER 22, 2010

REGISTERED PROFESSIONAL ENGINEER
REAN DAVID KUNITAKE
C-54285
Exp. 12-31-11
CIVIL
STATE OF CALIFORNIA

CAUTION
0 1"
THIS DRAWING IS TO SCALE ONLY IF BAR MEASURES 1 INCH

PERLITER & INGALSBE
CONSULTING ENGINEERS
ALTADENA, CALIFORNIA

SUBMITTED: FOR THE CONSULTING ENGINEERS R.C.E. NO. 54285
REVIEWED: MANAGER OF ENGINEERING, CALLEGUAS MUNICIPAL WATER DISTRICT
DESIGNED: R.Y.K. DRAWN: V.T./J.S. CHECKED: R.Y.K.

CALLEGUAS MUNICIPAL WATER DISTRICT
THOUSAND OAKS, CALIFORNIA

SALINITY MANAGEMENT PIPELINE, PHASE 2A

PHOTO PLANS
STA 36+00.00 TO STA 69+00.00

FILE NO.	DATE	SPEC. NO.	SHEET
298/27	DEC 2010	470	27 OF 48 SHEETS

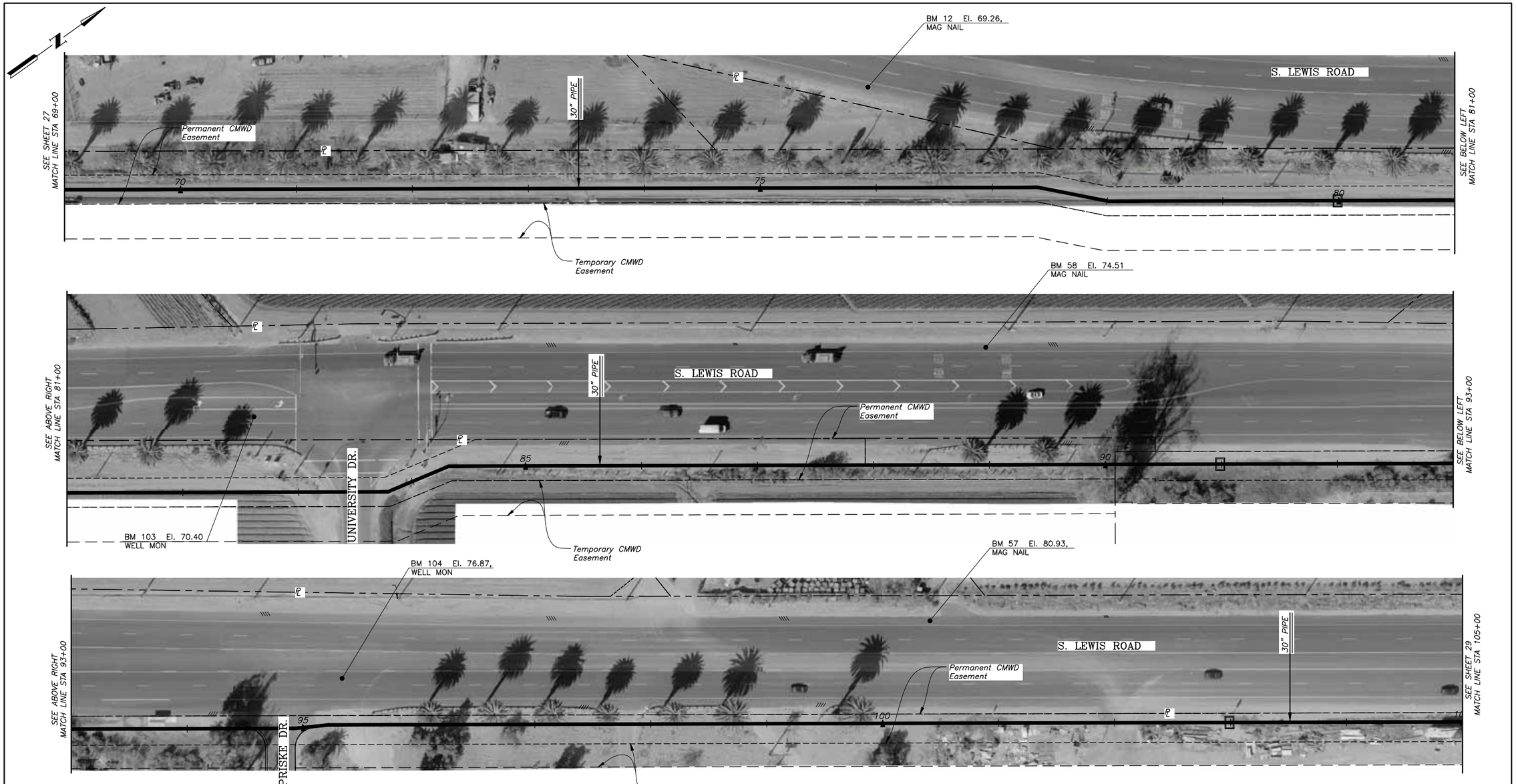

TEMPORARY BENCHMARKS	NORTH	EAST	ELEVATION	DESCRIPTION
TBM 12	1,890,310.241	6,246,499.115	69.26	MAG NAIL
TBM 103	1,890,770.988	6,246,983.933	70.40	WELL MON
TBM 58	1,891,268.632	6247376.699	74.51	MAG NAIL
TBM 104	1,891,689.989	6,247,857.459	76.87	WELL MON
TBM 57	1,892,090.805	6,248,171.807	80.93	MAG NAIL

PLAN

40 0 40 80 120 FEET

SCALE: 1 IN. = 40 FT.

REVISIONS

MARK	DATE	DESCRIPTION

DRAFT
NOT FOR CONSTRUCTION
DATE: DECEMBER 22, 2010

REGISTERED PROFESSIONAL ENGINEER
REAN DAVID KUNTAKE
C-54285
Exp. 12-31-11
CIVIL
STATE OF CALIFORNIA

CAUTION
0 1"
THIS DRAWING IS TO SCALE ONLY IF BAR MEASURES 1 INCH

PERLITER & INGALSBE
CONSULTING ENGINEERS
ALTADENA, CALIFORNIA

SUBMITTED: FOR THE CONSULTING ENGINEERS R.C.E. NO. 54285
REVIEWED: MANAGER OF ENGINEERING, CALLEGUAS MUNICIPAL WATER DISTRICT
DESIGNED: R.Y.K. DRAWN: ---- CHECKED: R.Y.K.

CALLEGUAS MUNICIPAL WATER DISTRICT
THOUSAND OAKS, CALIFORNIA

SALINITY MANAGEMENT PIPELINE, PHASE 2A

PHOTO PLANS
STA 69+00.00 TO STA 105+00.00

FILE NO.	DATE	SPEC. NO.	SHEET
298/28	DEC 2010	470	28 OF 48 SHEETS

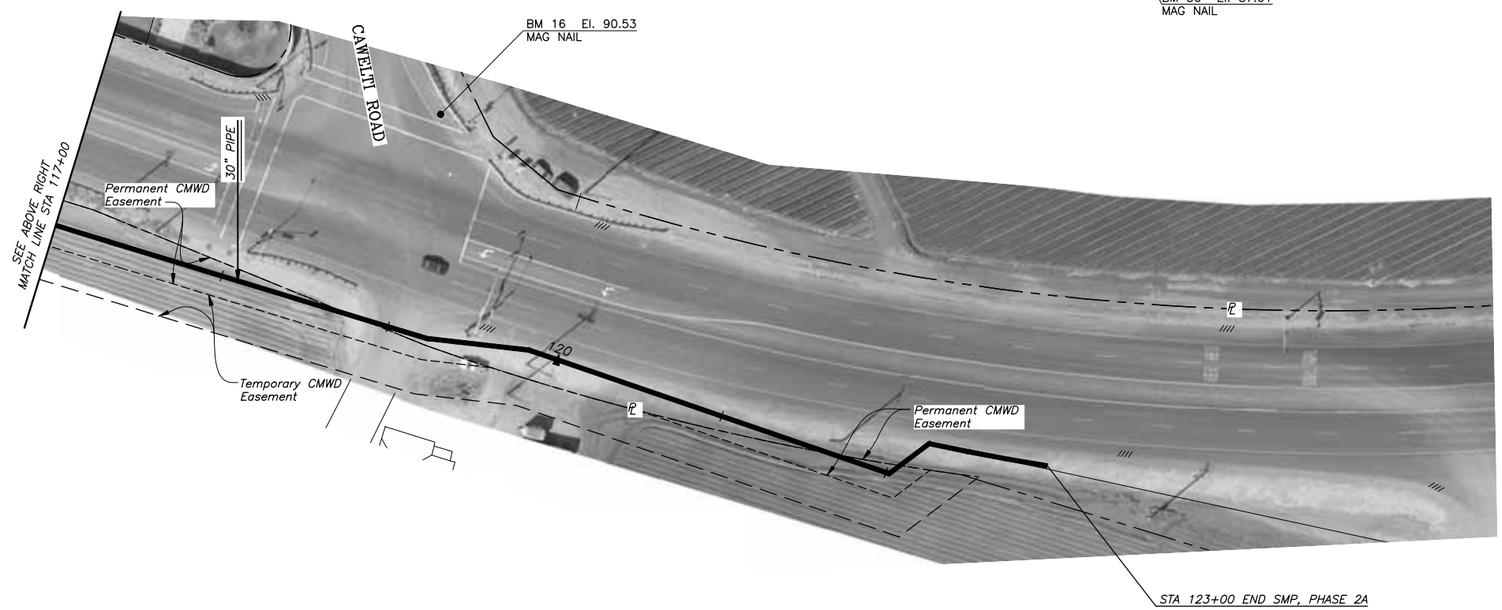

TEMPORARY BENCHMARKS	NORTH	EAST	ELEVATION	DESCRIPTION
TBM 56	1,892,902.393	6,249,048.881	87.01	MAG NAIL
TBM 16	1,893,433.844	6,249,440.762	90.53	MAG NAIL

PLAN

40 0 40 80 120 FEET

SCALE: 1 IN. = 40 FT.

REVISIONS		
MARK	DATE	DESCRIPTION

DRAFT
NOT FOR CONSTRUCTION
DATE: DECEMBER 22, 2010

REGISTERED PROFESSIONAL ENGINEER
REAN DAVID KUNTAKE
C-54285
Exp. 12-31-11
CIVIL
STATE OF CALIFORNIA

CAUTION
0 1"
THIS DRAWING IS TO SCALE ONLY IF BAR MEASURES 1 INCH

PERLITER & INGALSBE
CONSULTING ENGINEERS
ALTADENA, CALIFORNIA

SUBMITTED: FOR THE CONSULTING ENGINEERS R.C.E. NO. 54285
REVIEWED: MANAGER OF ENGINEERING, CALLEGUAS MUNICIPAL WATER DISTRICT
DESIGNED: R.Y.K. DRAWN: ---- CHECKED: R.Y.K.

CALLEGUAS MUNICIPAL WATER DISTRICT
THOUSAND OAKS, CALIFORNIA

SALINITY MANAGEMENT PIPELINE, PHASE 2A

PHOTO PLANS
STA 105+00.00 TO STA 123+00

FILE NO.	DATE	SPEC. NO.	SHEET
298/29	DEC 2010	470	29 OF 48 SHEETS

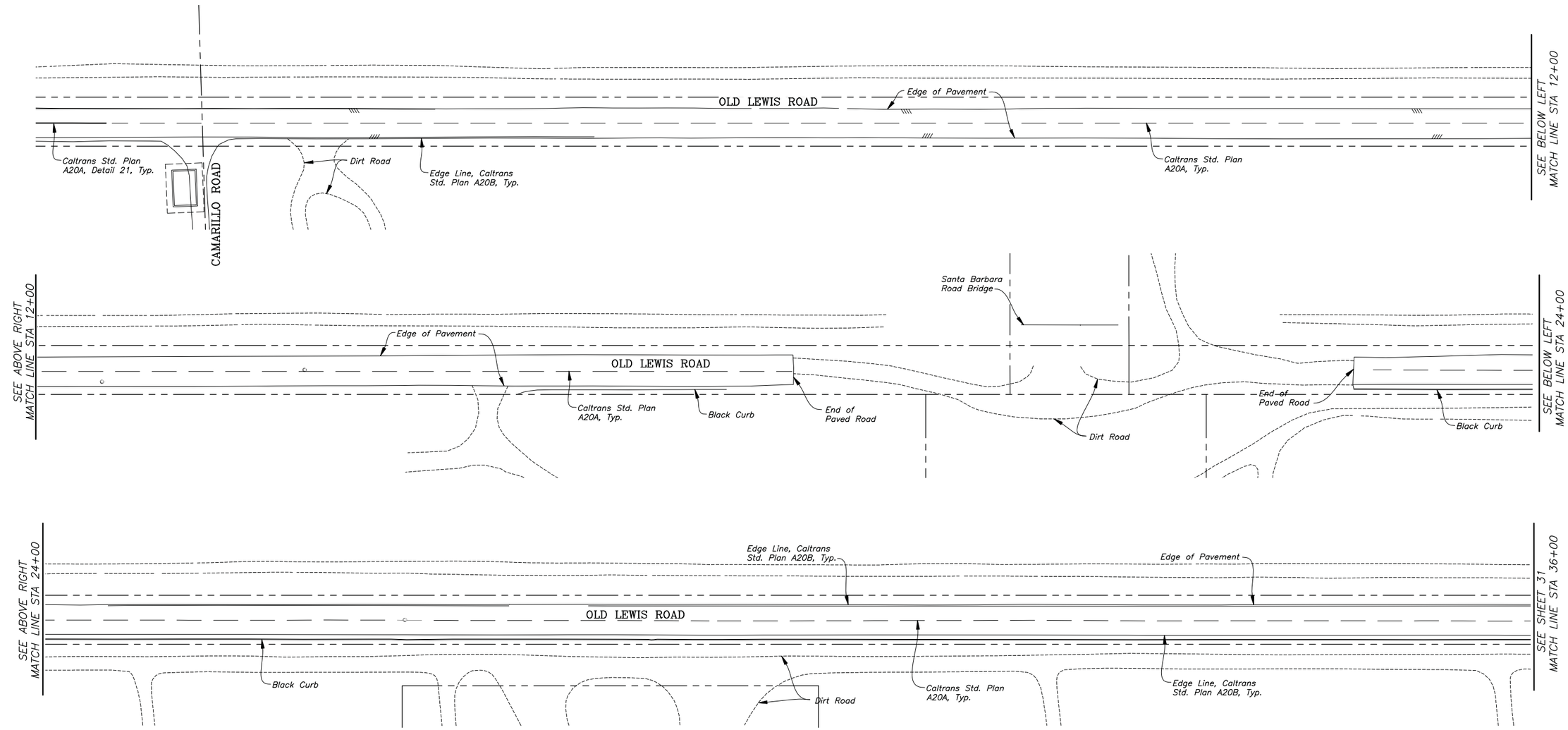

PLAN

40 0 40 80 120 FEET

SCALE: 1 IN. = 40 FT.

REVISIONS		
MARK	DATE	DESCRIPTION

DRAFT
NOT FOR CONSTRUCTION
DATE: DECEMBER 22, 2010

REGISTERED PROFESSIONAL ENGINEER
REAN DAVID KUNITAKE
C-54285
Exp. 12-31-11
CIVIL
STATE OF CALIFORNIA

CAUTION
0 1"
THIS DRAWING IS TO SCALE ONLY IF BAR MEASURES 1 INCH

PERLITER & INGALSBE
CONSULTING ENGINEERS
ALTADENA, CALIFORNIA

SUBMITTED: FOR THE CONSULTING ENGINEERS R.C.E. NO. 54285
REVIEWED: MANAGER OF ENGINEERING, CALLEGUAS MUNICIPAL WATER DISTRICT
DESIGNED: R.Y.K. DRAWN: S.J. CHECKED: R.Y.K.

CALLEGUAS MUNICIPAL WATER DISTRICT
THOUSAND OAKS, CALIFORNIA

SALINITY MANAGEMENT PIPELINE, PHASE 2A

STREET STRIPING PLANS
STA 1+00.00 TO STA 36+00.00

FILE NO.	DATE	SPEC. NO.	SHEET
298/30	DEC 2010	470	30 OF 48 SHEETS

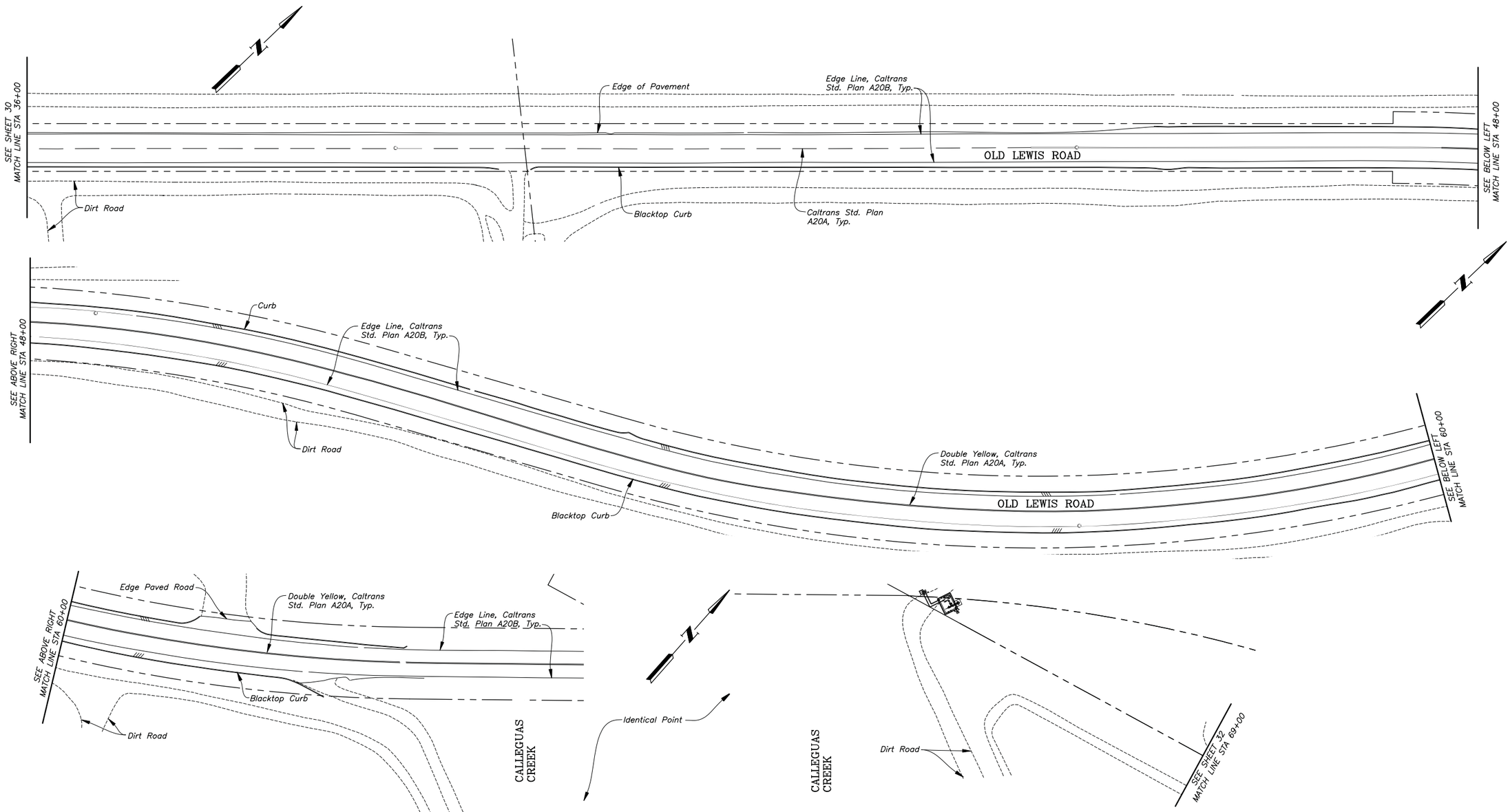

PLAN

40 0 40 80 120 FEET

SCALE: 1 IN. = 40 FT.

REVISIONS		
MARK	DATE	DESCRIPTION

DRAFT
NOT FOR CONSTRUCTION
DATE: DECEMBER 22, 2010

REGISTERED PROFESSIONAL ENGINEER
REAN DAVID KUNTAKE
C-54285
Exp. 12-31-11
CIVIL
STATE OF CALIFORNIA

CAUTION
0 1"
THIS DRAWING IS TO SCALE ONLY IF BAR MEASURES 1 INCH

PERLITER & INGALSBE
CONSULTING ENGINEERS
ALTADENA, CALIFORNIA

SUBMITTED: FOR THE CONSULTING ENGINEERS R.C.E. NO. 54285
REVIEWED: MANAGER OF ENGINEERING, CALLEGUAS MUNICIPAL WATER DISTRICT
DESIGNED: R.Y.K. DRAWN: ---- CHECKED: R.Y.K.

CALLEGUAS MUNICIPAL WATER DISTRICT
THOUSAND OAKS, CALIFORNIA

SALINITY MANAGEMENT PIPELINE, PHASE 2A

STREET STRIPING PLANS
STA 36+00.00 TO STA 69+00.00

FILE NO.	DATE	SPEC. NO.	SHEET
298/31	DEC 2010	470	31 OF 48 SHEETS

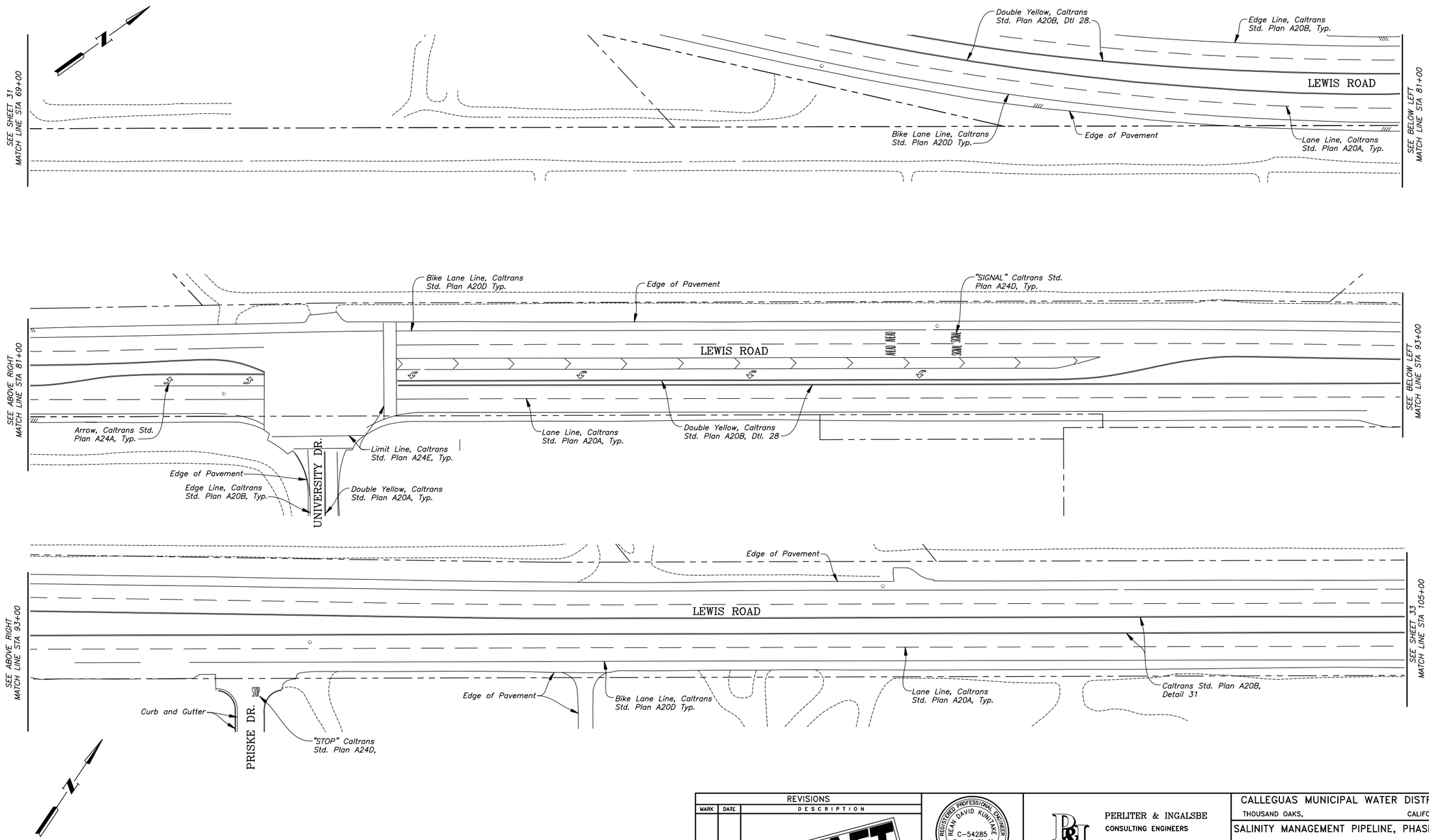

PLAN

40 0 40 80 120 FEET

SCALE: 1 IN. = 40 FT.

REVISIONS		
MARK	DATE	DESCRIPTION

DRAFT
NOT FOR CONSTRUCTION
DATE: DECEMBER 22, 2010

REGISTERED PROFESSIONAL ENGINEER
REAN DAVID KUNITAKE
C-54285
Exp. 12-31-11
CIVIL
STATE OF CALIFORNIA

CAUTION
0 1"
THIS DRAWING IS TO SCALE ONLY IF BAR MEASURES 1 INCH

PERLITER & INGALSBE
CONSULTING ENGINEERS
ALTADENA, CALIFORNIA

SUBMITTED: FOR THE CONSULTING ENGINEERS R.C.E. NO. 54285
REVIEWED: MANAGER OF ENGINEERING, CALLEGUAS MUNICIPAL WATER DISTRICT
DESIGNED: R.Y.K. DRAWN: V.T. CHECKED: R.Y.K.

CALLEGUAS MUNICIPAL WATER DISTRICT
THOUSAND OAKS, CALIFORNIA

SALINITY MANAGEMENT PIPELINE, PHASE 2A

STREET STRIPING PLANS

FILE NO.	DATE	SPEC. NO.	SHEET
298/32	DEC 2010	470	32 OF 48 SHEETS

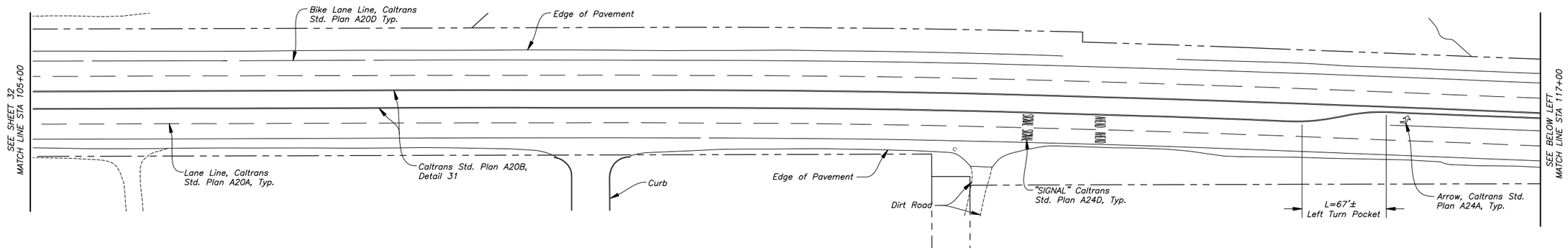

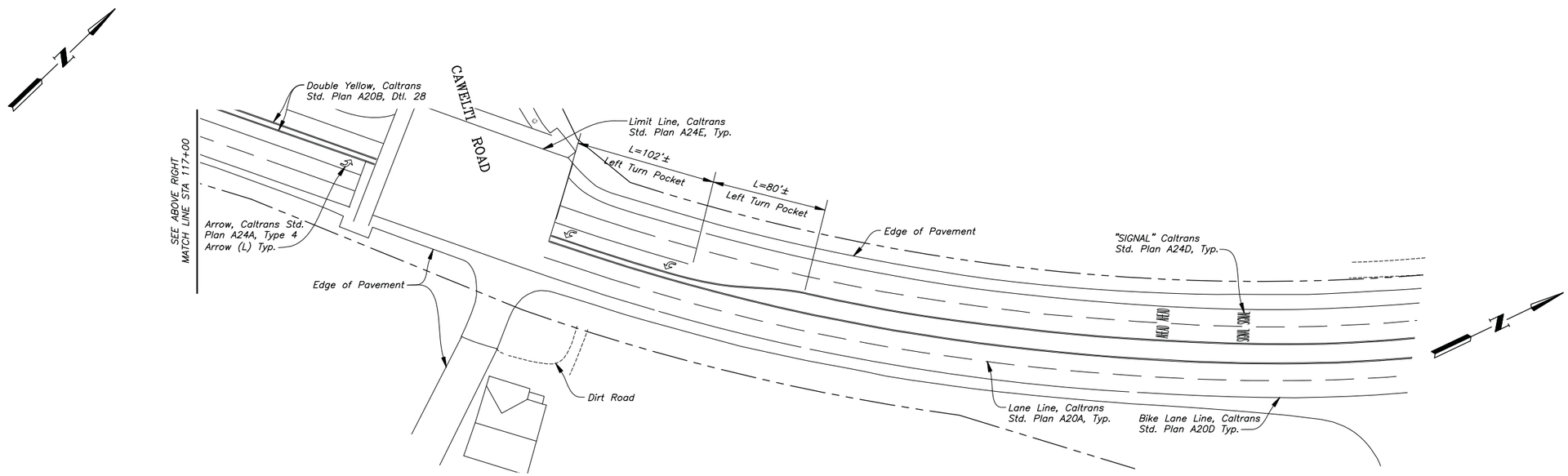

PLAN

40 0 40 80 120 FEET

SCALE: 1 IN. = 40 FT.

REVISIONS		
MARK	DATE	DESCRIPTION

DRAFT
NOT FOR CONSTRUCTION
DATE: DECEMBER 22, 2010

REGISTERED PROFESSIONAL ENGINEER REAN DAVID KUNITAKE C-54285 Exp. 12-31-11 CIVIL STATE OF CALIFORNIA

CAUTION
0 1"
THIS DRAWING IS TO SCALE ONLY IF BAR MEASURES 1 INCH

PERLITER & INGALSBE
CONSULTING ENGINEERS
ALTADENA, CALIFORNIA

SUBMITTED: FOR THE CONSULTING ENGINEERS R.C.E. NO. 54285
REVIEWED: MANAGER OF ENGINEERING, CALLEGUAS MUNICIPAL WATER DISTRICT
DESIGNED: R.Y.K. DRAWN: VT/JS CHECKED: R.Y.K.

CALLEGUAS MUNICIPAL WATER DISTRICT
THOUSAND OAKS, CALIFORNIA

SALINITY MANAGEMENT PIPELINE, PHASE 2A

STREET STRIPING PLANS

FILE NO.	DATE	SPEC. NO.	SHEET
298/33	DEC 2010	470	33 OF 48 SHEETS

TEMPORARY TRAFFIC CONTROL NOTES

GENERAL

1. The County of Ventura reserve the right to observe these Traffic Control Drawings in use within their jurisdiction and to make any necessary changes as field conditions warrant. Any changes requested by the City of Camarillo or Caltrans and as approved by the Owner shall supersede these Drawings. Significant changes will be handled as Extra Work.
2. All work to be done are subject to the Terms and Conditions and Special Conditions set forth in the jurisdictional agency's respective Encroachment Permit. In case of conflict between the Encroachment Permit and these Traffic Control Drawings, the more stringent requirement shall govern.
3. All traffic control devices, striping, markings, legends and raised pavement markers shall conform to the Manual of Uniform Traffic Control Devices with California Supplement (2010), Caltrans Standard Plans (2006) and Standard Specifications (2006) and the Contract Documents.
4. All signs shall be sized in accordance to Table 6F-1 of the California MUTCD.
5. All temporary striping, temporary pavement, and traffic control devices shall be removed promptly following completion of each construction stage and the permanent striping and traffic control devices shall be restored promptly by the Contractor upon completion of each construction stage.
6. Work shall not commence until all appropriate traffic control devices are in place.
7. These traffic control plans were prepared with the assumption that the Contractor will conduct the work at a single location at any one time, with work progressing generally from south to north. If the Contractor should deviate from these assumptions or prepared traffic control plans for any reason, he shall submit a detailed traffic control plan(s) stamped and signed by a registered civil or traffic engineer to the Owner and agency(ies) having jurisdiction for review and written approval prior to beginning work in the affected area(s). Contractor is advised that submitted modified traffic control plans may not be approved for any reason by the Owner or agencies having jurisdiction. Any traffic control plan submitted for review must be submitted at least 4 weeks prior to scheduled installation. Longer lead time for submittal may be required due to multiple reviews. Contractor shall contact agency(ies) having jurisdiction to determine additional time required for each additional review period.
8. Contractor shall have available at all times, at least one 10-foot long k-rail at each temporary traffic control K-rail barrier setup for 10-foot barrier length adjustment(s).
9. All new and existing striping is as shown on Drawing. New temporary traffic control signs shown in locations may not be to scale and may not be shown to scale in relation to striping shown.
10. No storage of equipment or materials will be allowed within medians or outside of the limits of the K-Rail (for this purpose, crash barriers are not considered a part of the k-rail system).
11. Areas behind delineated tapers or buffers may not be used for the parking of worker vehicles if vehicles may block or otherwise obstruct any line of sight from the motoring public, bicyclists, or pedestrians.
12. Work hours are shown for each traffic control set up and apply to all work other than setting up and taking down traffic control and tunneling. Setting up and taking down traffic control may only be performed between 7pm and 7am. Trenchless installation of casings may be performed 24 hours per day, 7 days per week.
13. Crash cushion system shown on these traffic control plans shall be Absorb 350, five element system by Barrier Systems, Inc. Alternate and equivalent crash cushions may be used as approved in writing by the agency having jurisdiction & the Engineer. Crash cushions shall be placed as shown and at the ends of all K-rails facing oncoming traffic and as shown on the Drawings.

DEMOLITION, REMOVAL & RESTORATION

1. Contractor shall cover or remove all conflicting signs, markings and other traffic control devices. Sandblast or hydroblast all conflicting permanent striping, arrows, raised pavement markers and other pavement markings as shown and as additionally required. Covering or grinding of conflicting striping is not allowed. Replace all striping and markings once the traffic control setup is completed.
2. Street lights, electrical & control appurtenances, vegetation, and portions of raised medians may have to be removed as shown on plans and additionally as required to install traffic control shown in these Drawings. Contractor is responsible for the coordination with the agency having jurisdiction, and shall remove, and replace with approved equal or better.
3. Where raised median is shown for removal, it shall be removed a minimum of 2' behind striping.

ACCESS & SAFETY

1. Contractor is responsible for all sheeting/shoring to protect excavations from sloughing, erosion and the impact of all live and dead loads. Where K-rail is not used to protect open excavation, five feet minimum clearance shall be maintained between edge of trench or open excavation and adjacent moving traffic lanes.
2. Dirt and paved access driveways or portions thereof which are not to be used or are not required for access during construction shall be clearly marked and Type III barriers installed to prevent errant access to or from the main road.
3. The Contractor shall install video detection to replace loops on all affected roads while loops are out of service. Contractor shall be responsible for installation and set-up of detection zones. Notification to and coordination with the agency having jurisdiction shall be the Contractor's responsibility, but shall be no fewer than 14 Calendar Days before the start of work in the affected area.
4. Plating within traffic areas is allowed only as shown in the Contract Documents and must be performed in accordance with the requirements of the agency having jurisdiction. Any traffic plates allowed to be installed within the north/south traveled way of Lewis Road shall be non-skid treated, pinned, and recessed such that the top of plate is at the same elevation as the finished ground. Other traffic plates used for minor streets shall be non-skid treated. No traffic plates will be allowed unless shown in the Contract Documents or approved in writing by the Owner and the agency having jurisdiction.
5. In addition to the required flagmen, there shall be at least one person assigned to provide full time maintenance of traffic control devices.
6. Floodlights shall be used to illuminate flagger stations during work at nighttime and in low visibility conditions.
7. During night or low visibility conditions, all warning signs and barricades shall be equipped with flashing beacons.
8. All advanced warning sign installations shall be equipped with flags for daytime closures. Flashing yellow beacons shall be used on all W20-1 signs, signs following W20-1 and all barricades guarding the work area at all times.
9. Sidewalks are not within the Contractor's work area and shall be kept open and safe for pedestrians at all times. Where sidewalks do not exist, the Contractor shall provide means for adequate and safe crossing of the work area. Pedestrian detours requiring pedestrians to cross a road to avoid construction area will not be allowed.
10. Work areas shown or called out may include areas required for pedestrian access.

TC PLACEMENT

1. Contractor shall provide flaggers as shown and any additional as deemed necessary by the Contractor, Owner or County of Ventura. Additional flaggers required by the Owner or jurisdictional authority will be paid for in accordance with the provisions of the Contract Drawings.
2. Contractor shall post uneven pavement signs, and ramp vertical pavement offsets of 1 inch or more with asphalt for smooth transition.
3. The Contractor shall post advance notice electronic portable changeable message signs (PCMS) on each side of construction a minimum of 2 weeks in advance of any street or lane closure advising public of potential delays of work which reads "CONSTRUCTION EXPECT DELAYS". PCMS shall be moved along and relative to the construction area to provide a constant warning throughout the work and shall remain until completion of work. Wording and placement shall be approved by the Owner and agency having jurisdiction.
4. Temporary removable striping tape (detour grade) may be used in lieu of painted temporary striping.
5. Striping which must be installed for less than 24 hours may be temporary reflective traffic rated tape.
6. All surface mounted delineators shall be installed at 20' Maximum spacing except as otherwise shown.
7. K-rail tapers shall be 10:1.
8. Delineators may be placed prior to K-rail installation, but in all cases K-rail installation will be accompanied by crash cushions at all ends as shown on the details.
9. Unless otherwise shown, 11' minimum lanes are required at all times.
10. Traffic control limits shown in each detail are approximate and may require adjustment in the field to allow proper pipe assembly. Obtain Owner and jurisdictional agency acceptance prior to making any modifications.
11. Location of signs are approximately shown on the Drawings. Adjustments to sign locations may be required to suit field conditions.
12. Contractor shall omit delineators which may block access to open driveways.
13. Where flaggers are shown on the Drawings, they shall be in place 24 hours per day, every day that the traffic control is in place, even if allowable work hours are not 24 hours per day.
14. One project sign (per CMWD Std. Dwg. 811) shall be placed at each end of project area, one facing northbound traffic, one facing southbound traffic.
15. In addition to no parking areas shown on the Drawings, "No Parking" signs shall be placed with 72 hours advanced notice in all areas where traffic controls are installed (Striping and delineators) and 50 feet beyond those traffic controls. Where flaggers are used, "No Parking" signs shall be a minimum of 100 feet from any flagger station. In areas where no parking restriction exists, no additional signage is required.
16. Signs used to provide motorist direction/instruction behind K-rail or other barrier shall be clearly visible to intended motorists. Where necessary, signs shall be installed on secured posts.
17. 10 foot K-rails shall be used where K-rails are shown curved in intersections.
18. Where K-rail is placed in a curve so severe that they cannot be connected together by their bolted joints, continuous earth backfill shall be placed in accordance with (A/35).

MAINTENANCE

1. Contractor shall maintain access to all driveways at all times during construction, except those shown on the plans as closed.
2. Inspect and remove graffiti daily: Remove graffiti from all materials, equipment, structures and improvements including, without limitation, traffic control devices, project and other signage, construction facilities and equipment, temporary fencing, portable toilets, storage containers and refuse bins.
3. Inspect daily, including non-working days and replace, repair and maintain at all times: Temporary fencing, and all traffic control devices and striping/markings for compliance with approved traffic control plans.

PLAN

40 0 40 80 120 FEET

SCALE: 1 IN. = 40 FT.

DRAFT
NOT FOR CONSTRUCTION
DATE: DECEMBER 22, 2010

REVISIONS		
MARK	DATE	DESCRIPTION

REGISTERED PROFESSIONAL ENGINEER
REAN DAVID KUNITME
C-54285
Exp. 12-31-11
CIVIL
STATE OF CALIFORNIA

CAUTION
0 1"
THIS DRAWING IS TO SCALE ONLY IF BAR MEASURES 1 INCH

PERLITER & INGALSBE
CONSULTING ENGINEERS
ALTADENA, CALIFORNIA

SUBMITTED: FOR THE CONSULTING ENGINEERS R.C.E. NO. 54285
REVIEWED: MANAGER OF ENGINEERING, CALLEGUAS MUNICIPAL WATER DISTRICT
DESIGNED: RYK DRAWN: VT CHECKED: RYK

CALLEGUAS MUNICIPAL WATER DISTRICT
THOUSAND OAKS, CALIFORNIA

SALINITY MANAGEMENT PIPELINE, PHASE 2A

TEMPORARY TRAFFIC CONTROL NOTES

FILE NO.	DATE	SPEC. NO.	SHEET
298/34	DEC 2010	470	34 OF 48 SHEETS

SIGN LEGEND

- SIGN C-9A(CA)
- SIGN C17(CA) (FRONT)
- SIGN C17(CA) (BACK)
- SIGN C30(CA)
- SIGN C30A (CA)
- SIGN C37 (CA) (MOD)
- SIGN G20-2
- SIGN M4-9A
- SIGN M4-8
- SIGN M4-8a
- SIGN M4-10 (LEFT OR RIGHT)
- SIGN R1-1 (36"x36")
- SIGN R3-1
- SIGN R3-3
- SIGN R3-5 (LEFT OR RIGHT)
- SIGN R3-7
- SIGN R6-2
- SIGN R10-11
- SIGN R11-2
- SIGN R20-1 (CA) (MODIFIED)
- SIGN SC3(CA)
- SIGN W1-2
- SIGN W1-4 (LEFT OR RIGHT)
- SIGN W1-6(L)
- SIGN W1-7
- SIGN W3-4
- SIGN W4-1
- SIGN W4-2
- SIGN W4-7
- SIGN W5-1
- SIGN W12-1
- SIGN W11A-2 (FHWA-Pedestrian Crossing Sign)
- SIGN W13-1
- SIGN W20-1 ("XXX" AS SHOWN ON PLAN)
- SIGN W20-2
- SIGN W20-3 ("XXX" AS SHOWN ON PLAN)
- SIGN W20-5 ("XXX" AS SHOWN ON PLAN)
- SIGN W20-4 ("XXX" AS SHOWN ON PLAN)
- SIGN W21-5
- SIGN W21-5b
- SIGN W73A (CA)
- CUSTOM SIGN 1 (R11-4 MOD)

NOTE:
Size of all signs shall be in accordance with MUTCD (CA) for conventional road except as noted.

STRIPING AND CONTROLS LEGEND

TEMPORARY TC

- FLASHING ARROW SIGN
- TYPE II BARRICADE WITH WARNING LIGHT
- TYPE III BARRICADE WITH WARNING LIGHT
- SURFACE MOUNTED DELINEATORS (GLUE DOWN) WITHOUT STRIPING
- SURFACE MOUNTED DELINEATORS (GLUE DOWN) WITH STRIPING
- 5' SPACED DELINEATORS
- 10' SPACED DELINEATORS
- 20' SPACED DELINEATORS
- PORTABLE CONCRETE BARRIER (TYPE K) WITH WARNING LIGHTS
- ABSORB 350 FIVE ELEMENT SYSTEM BY BARRIER SYSTEMS, INC. OR APPROVED EQUIVALENT
- SIGN
- FLAGGER
- TEMPORARY TRAFFIC SIGNAL HEAD LOCATIONS
- TRAFFIC SIGNAL HEAD FACING DIRECTION
- PORTABLE CHANGEABLE MESSAGE SIGN
- PEDESTRIAN CROSSING SIGNAL
- STRIPING TO BE INSTALLED DURING CONSTRUCTION. DTL 21 – TWO 4" YELLOW STRIPING
- STRIPING TO BE INSTALLED DURING CONSTRUCTION. DTL 24 – 4" YELLOW STRIPING
- STRIPING TO BE INSTALLED DURING CONSTRUCTION. DTL 27B – 4" WHITE STRIPING
- XX' DIRECTION OF TRAFFIC FLOW AND MINIMUM LANE WIDTH DURING CONSTRUCTION
- TEMPORARY ARROW TO BE INSTALLED DURING CONSTRUCTION
- CAT TRACKING (DOUBLE YELLOW)
- CAT TRACKING (WHITE)
- DIRECTION OF TRAFFIC FLOW (FOR SIGNAL AND MOVEMENT DETAILS)

EXISTING TC

- EXISTING STRIPING TO BE COVERED OR REMOVED WHERE CONFLICTING WITH TEMPORARY STRIPING. REPLACE PER EXISTING FOLLOWING CONSTRUCTION.
- EXISTING ARROW TO BE COVERED OR REMOVED DURING CONSTRUCTION. REPLACE TO MATCH EXISTING FOLLOWING CONSTRUCTION.
- EXISTING ARROW TO REMAIN DURING CONSTRUCTION
- EXISTING DOUBLE YELLOW STRIPING WITH PAVEMENT MARKERS
- EXISTING STRIPING TO REMAIN
- EXISTING TRAFFIC SIGNAL
- EXISTING TRAFFIC SIGNAL ON POLE
- SIGN

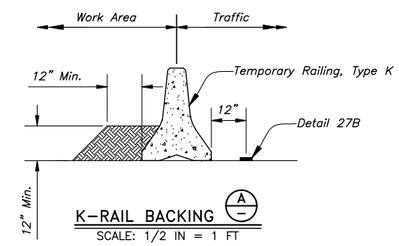

K-RAIL BACKING (A)
SCALE: 1/2 IN = 1 FT

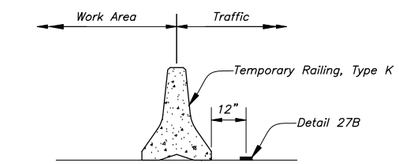

TYPICAL K-RAIL SETUP (B)
SCALE: 1/2 IN = 1 FT

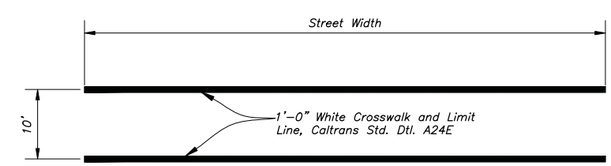

TEMPORARY CROSSWALK DETAIL (C)
NOT TO SCALE

PLAN
SCALE: 1 IN. = 40 FT.

DRAFT
NOT FOR CONSTRUCTION
DATE: DECEMBER 22, 2010

REVISIONS		
MARK	DATE	DESCRIPTION

REGISTERED PROFESSIONAL ENGINEER REAN DAVID KUNITME C-54285 Exp. 12-31-11 CIVIL STATE OF CALIFORNIA

CAUTION 0 1" THIS DRAWING IS TO SCALE ONLY IF BAR MEASURES 1 INCH

PERLITER & INGALSBE
CONSULTING ENGINEERS
ALTADENA, CALIFORNIA

SUBMITTED: FOR THE CONSULTING ENGINEERS R.C.E. NO. 54285
REVIEWED: MANAGER OF ENGINEERING, CALLEGUAS MUNICIPAL WATER DISTRICT
DESIGNED: VT DRAWN: VT CHECKED: RYK/VT

CALLEGUAS MUNICIPAL WATER DISTRICT
THOUSAND OAKS, CALIFORNIA
SALINITY MANAGEMENT PIPELINE, PHASE 2A

SIGN, STRIPING AND CONTROLS LEGEND

FILE NO.	DATE	SPEC. NO.	SHEET 35 OF 48 SHEETS
298/35	DEC 2010	470	

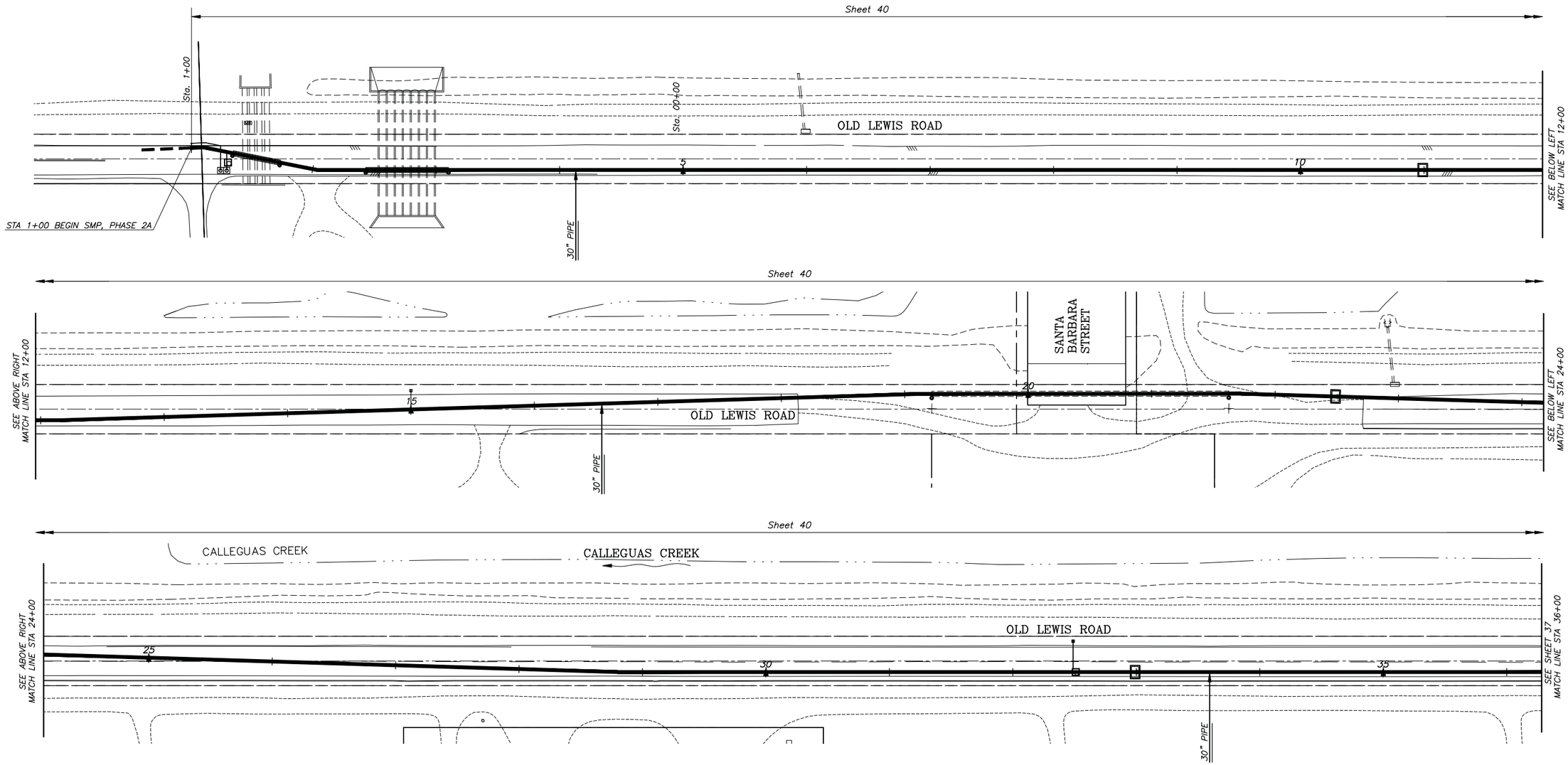

PLAN

40 0 40 80 120 FEET

SCALE: 1 IN. = 40 FT.

DRAFT
NOT FOR CONSTRUCTION
DATE: DECEMBER 22, 2010

REVISIONS		
MARK	DATE	DESCRIPTION

REGISTERED PROFESSIONAL ENGINEER
REAN DAVID KUNTZE
C-54285
Exp. 12-31-11
CIVIL
STATE OF CALIFORNIA

CAUTION
0 1"
THIS DRAWING IS TO SCALE ONLY IF BAR MEASURES 1 INCH

PERLITER & INGALSBE
CONSULTING ENGINEERS
ALTADENA, CALIFORNIA

SUBMITTED: FOR THE CONSULTING ENGINEERS R.C.E. NO. 54285
REVIEWED: MANAGER OF ENGINEERING, CALLEGUAS MUNICIPAL WATER DISTRICT
DESIGNED: VT/JS DRAWN: JS CHECKED: RYK

CALLEGUAS MUNICIPAL WATER DISTRICT
THOUSAND OAKS, CALIFORNIA

SALINITY MANAGEMENT PIPELINE, PHASE 2C

TEMPORARY TRAFFIC CONTROL LAYOUT PLAN
STA 1+00 TO STA 36+00

FILE NO.	DATE	SPEC. NO.	SHEET 36 OF 48 SHEETS
298/36	DEC 2010	470	

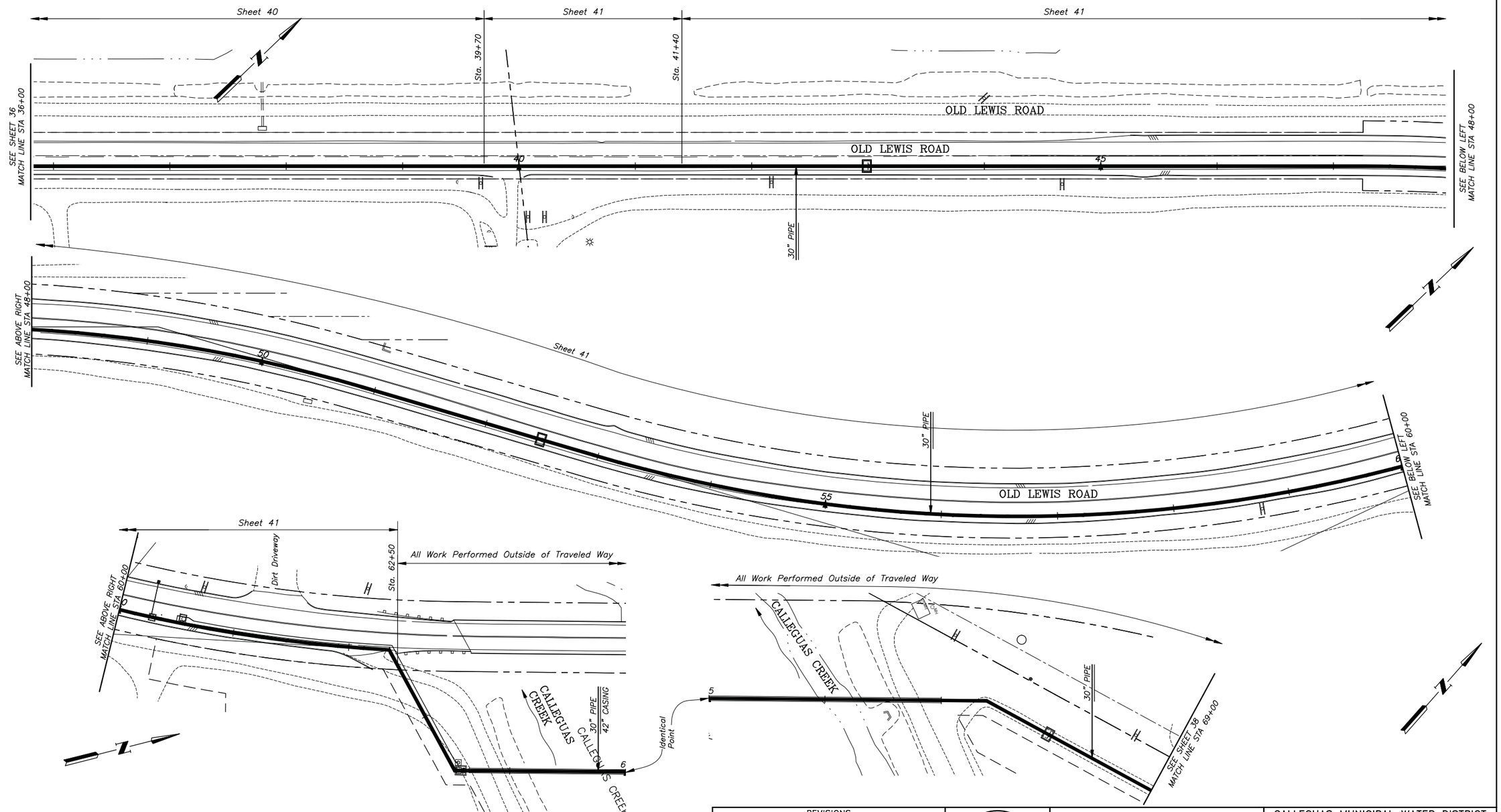

PLAN

40 0 40 80 120 FEET

SCALE: 1 IN. = 40 FT.

REVISIONS		
MARK	DATE	DESCRIPTION

DRAFT
NOT FOR CONSTRUCTION
DATE: DECEMBER 22, 2010

REGISTERED PROFESSIONAL ENGINEER
REAN DAVID KUNITAKE
C-54285
Exp. 12-31-11
CIVIL
STATE OF CALIFORNIA

CAUTION
0 1"
THIS DRAWING IS TO SCALE ONLY IF BAR MEASURES 1 INCH

PERLITER & INGALSBE
CONSULTING ENGINEERS
ALTADENA, CALIFORNIA

SUBMITTED: FOR THE CONSULTING ENGINEERS R.C.E. NO. 54285
REVIEWED: MANAGER OF ENGINEERING, CALLEGUAS MUNICIPAL WATER DISTRICT
DESIGNED: VT/JS DRAWN: JS CHECKED: RYK

CALLEGUAS MUNICIPAL WATER DISTRICT
THOUSAND OAKS, CALIFORNIA

SALINITY MANAGEMENT PIPELINE, PHASE 2A

TEMPORARY TRAFFIC CONTROL LAYOUT PLAN
STA 36+00 TO STA 69+00

FILE NO.	DATE	SPEC. NO.	SHEET
305/37	DEC 2010	470	37 OF 48 SHEETS

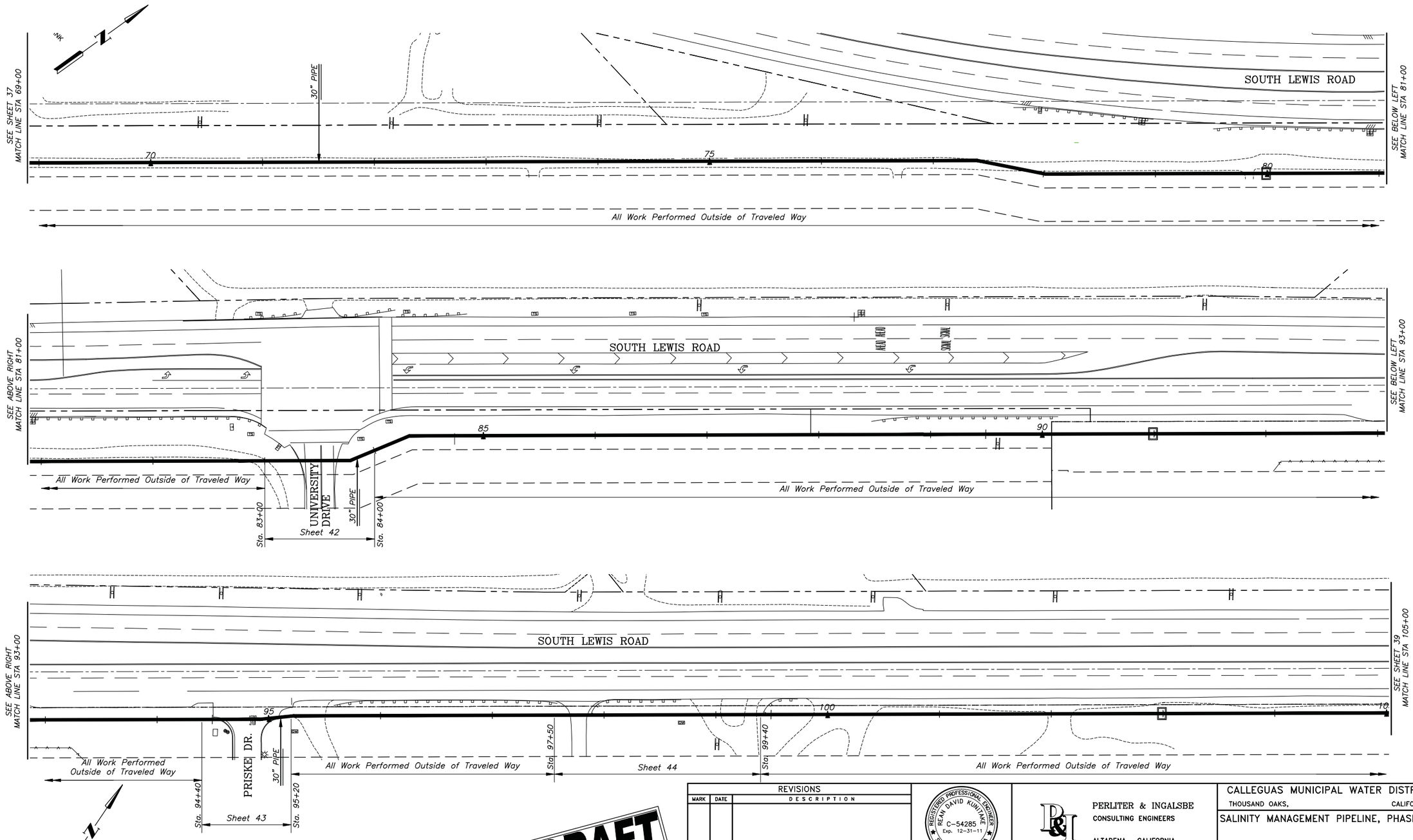

DRAFT
NOT FOR CONSTRUCTION
DATE: DECEMBER 22, 2010

REVISIONS		
MARK	DATE	DESCRIPTION

REGISTERED PROFESSIONAL ENGINEER
REAN DAVID KUNITME
C-54285
Exp. 12-31-11
CIVIL
STATE OF CALIFORNIA

CAUTION
0 1"
THIS DRAWING IS TO SCALE ONLY IF BAR MEASURES 1 INCH

PERLITER & INGALSBE
CONSULTING ENGINEERS
ALTADENA, CALIFORNIA

SUBMITTED: FOR THE CONSULTING ENGINEERS R.C.E. NO. 54285
REVIEWED: MANAGER OF ENGINEERING, CALLEGUAS MUNICIPAL WATER DISTRICT
DESIGNED: VT/JS DRAWN: JS CHECKED: RYK

CALLEGUAS MUNICIPAL WATER DISTRICT
THOUSAND OAKS, CALIFORNIA

SALINITY MANAGEMENT PIPELINE, PHASE 2C

TEMPORARY TRAFFIC CONTROL LAYOUT PLAN
STA 69+00 TO STA 105+00

FILE NO.	DATE	SPEC. NO.	SHEET
298/38	DEC 2010	470	38 OF 48 SHEETS

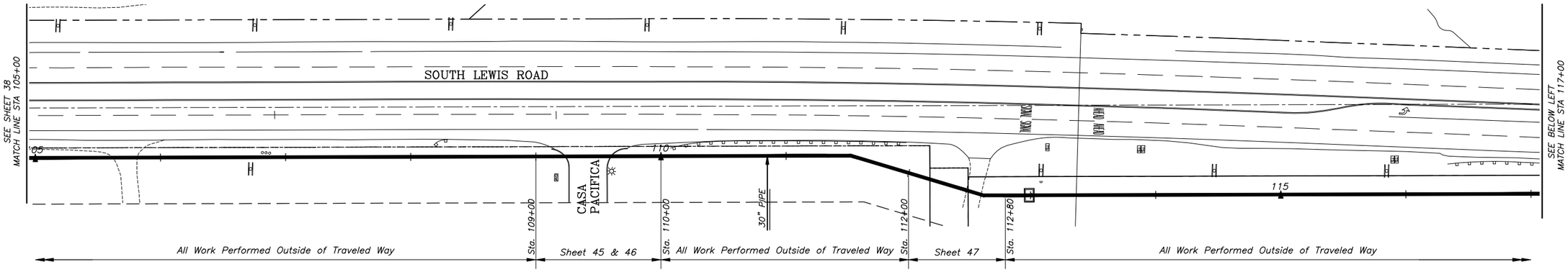

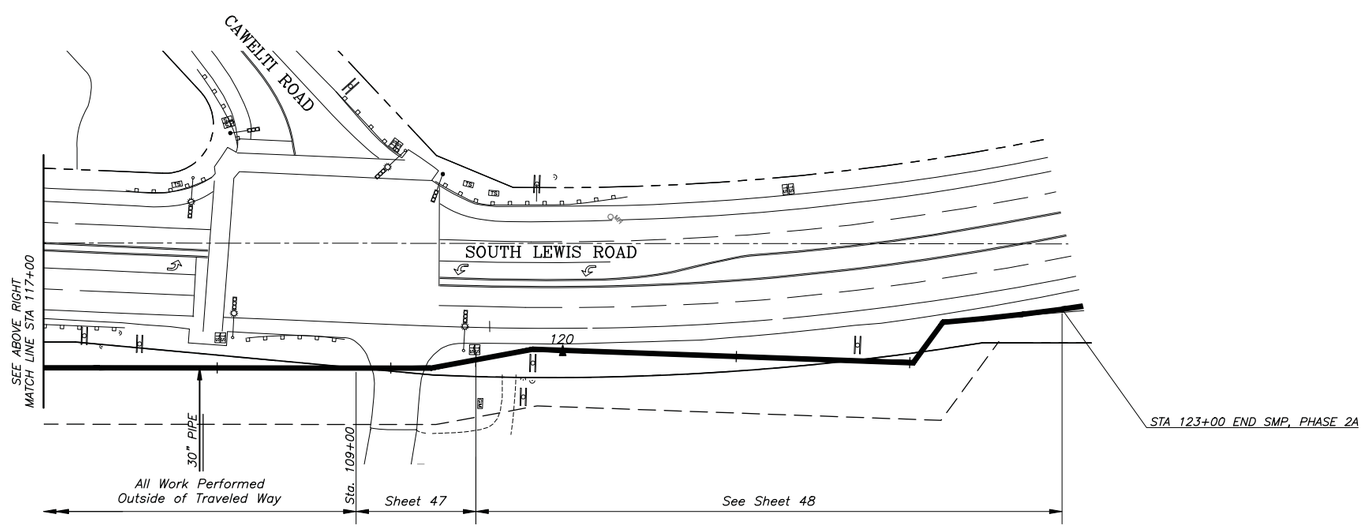

PLAN

40 0 40 80 120 FEET

SCALE: 1 IN. = 40 FT.

DRAFT
NOT FOR CONSTRUCTION
DATE: DECEMBER 22, 2010

REVISIONS		
MARK	DATE	DESCRIPTION

REGISTERED PROFESSIONAL ENGINEER
REAN DAVID KUNITAKE
C-54285
Exp. 12-31-11
CIVIL
STATE OF CALIFORNIA

CAUTION
0 1"
THIS DRAWING IS TO SCALE ONLY IF BAR MEASURES 1 INCH

PERLITER & INGALSBE
CONSULTING ENGINEERS
ALTADENA, CALIFORNIA

SUBMITTED: FOR THE CONSULTING ENGINEERS R.C.E. NO. 54285
REVIEWED: MANAGER OF ENGINEERING, CALLEGUAS MUNICIPAL WATER DISTRICT
DESIGNED: VT/JS DRAWN: JS CHECKED: RYK

CALLEGUAS MUNICIPAL WATER DISTRICT
THOUSAND OAKS, CALIFORNIA

SALINITY MANAGEMENT PIPELINE, PHASE 2C

TEMPORARY TRAFFIC CONTROL LAYOUT PLAN
STA 105+00 TO STA 123+00

FILE NO.	DATE	SPEC. NO.	SHEET
298/39	DEC 2010	470	39 OF 48 SHEETS

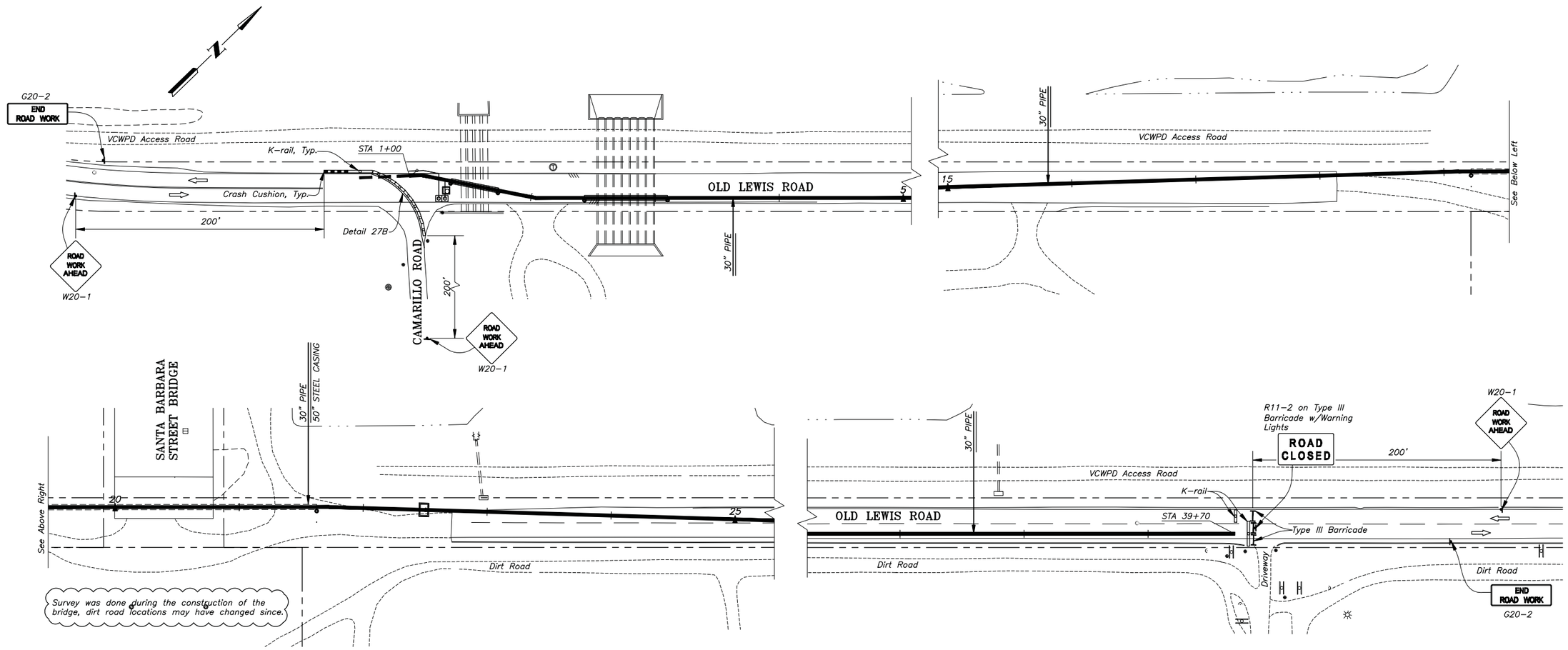

NOTES:
1. Work hours shall be __am to __pm, Monday through Friday, __am to __pm Saturday.
2.

TEMPORARY TRAFFIC CONTROL PIPE STA 1+00 TO STA 39+70 (A/–)

SCALE: 1 IN = 40 FT

REVISIONS		
MARK	DATE	DESCRIPTION

DRAFT
NOT FOR CONSTRUCTION
DATE: DECEMBER 22, 2010

REGISTERED PROFESSIONAL ENGINEER
REAN DAVID KUNITANE
C-54285
Exp. 12-31-11
CIVIL
STATE OF CALIFORNIA

CAUTION
0 1"
THIS DRAWING IS TO SCALE ONLY IF BAR MEASURES 1 INCH

PERLITER & INGALSBE
CONSULTING ENGINEERS
ALTADENA, CALIFORNIA

SUBMITTED: FOR THE CONSULTING ENGINEERS R.C.E. NO. 54285
REVIEWED: MANAGER OF ENGINEERING, CALLEGUAS MUNICIPAL WATER DISTRICT
DESIGNED: R.Y.K. DRAWN: V.T. CHECKED: R.Y.K.

CALLEGUAS MUNICIPAL WATER DISTRICT
THOUSAND OAKS, CALIFORNIA

SALINITY MANAGEMENT PIPELINE, PHASE 2A

TEMPORARY TRAFFIC CONTROL PIPE STA 1+00 TO STA 39+70

FILE NO.	DATE	SPEC. NO.	SHEET 40 OF 48 SHEETS
298/40	DEC 2010	470	

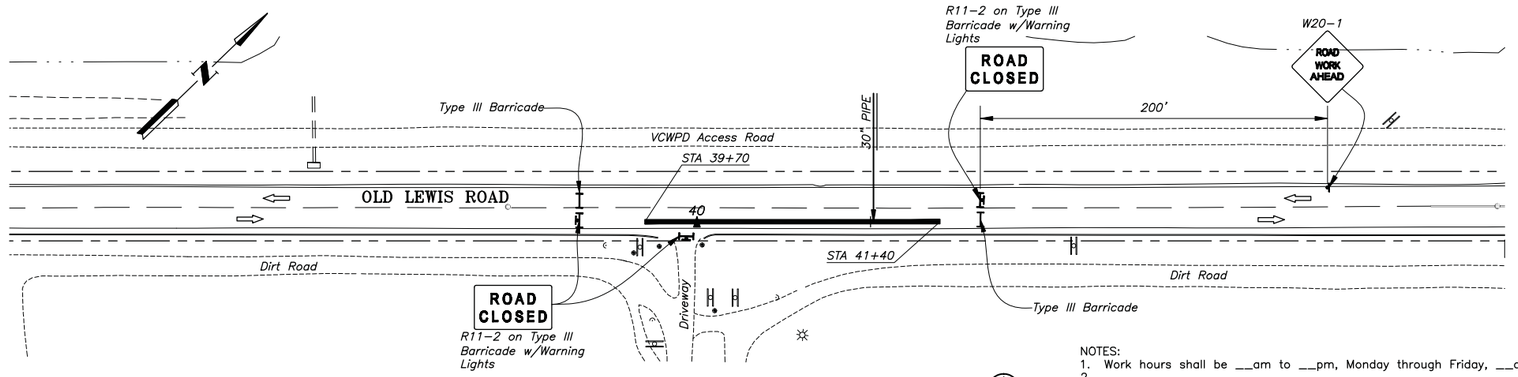

NOTES:
1. Work hours shall be __am to __pm, Monday through Friday, __am to __pm Saturday.
2.

TEMPORARY TRAFFIC CONTROL PIPE STA 39+70 TO STA 41+40 (A/–)

SCALE: 1 IN = 40 FT

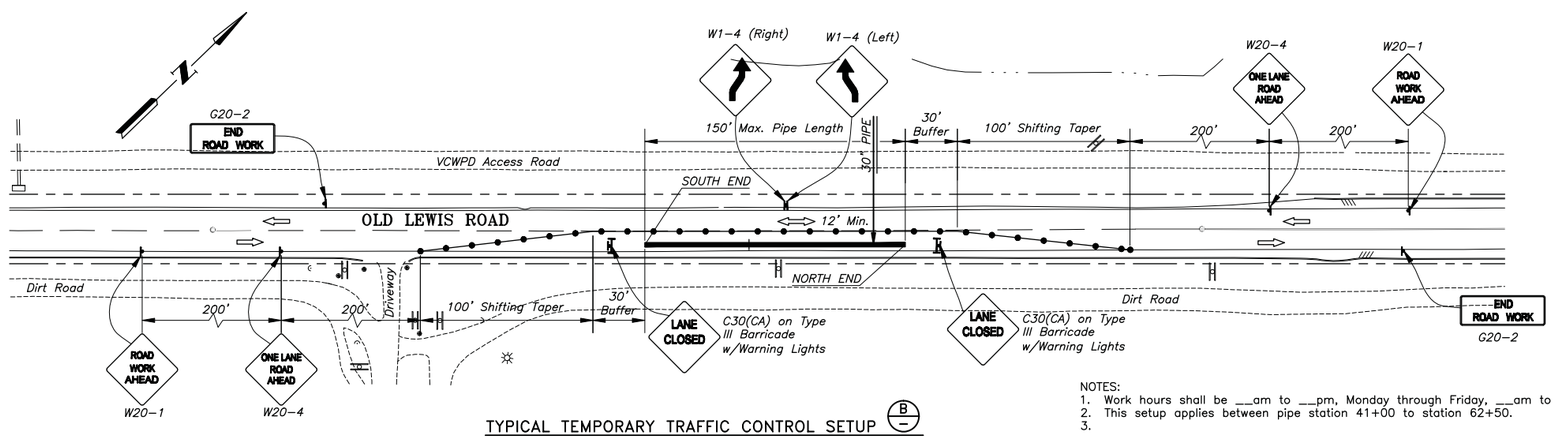

NOTES:
1. Work hours shall be __am to __pm, Monday through Friday, __am to __pm Saturday.
2. This setup applies between pipe station 41+00 to station 62+50.
3.

TYPICAL TEMPORARY TRAFFIC CONTROL SETUP (B/–)

SCALE: 1 IN = 40 FT

REVISIONS		
MARK	DATE	DESCRIPTION

DRAFT
NOT FOR CONSTRUCTION
DATE: DECEMBER 22, 2010

REGISTERED PROFESSIONAL ENGINEER
REAN DAVID KUNITAKE
C-54285
Exp. 12-31-11
CIVIL
STATE OF CALIFORNIA

CAUTION
0 1"
THIS DRAWING IS TO SCALE ONLY IF BAR MEASURES 1 INCH

PERLITER & INGALSBE
CONSULTING ENGINEERS
ALTADENA, CALIFORNIA

SUBMITTED: FOR THE CONSULTING ENGINEERS R.C.E. NO. 54285
REVIEWED: MANAGER OF ENGINEERING, CALLEGUAS MUNICIPAL WATER DISTRICT
DESIGNED: R.Y.K. DRAWN: V.T. CHECKED: R.Y.K.

CALLEGUAS MUNICIPAL WATER DISTRICT
THOUSAND OAKS, CALIFORNIA

SALINITY MANAGEMENT PIPELINE, PHASE 2A

TEMPORARY TRAFFIC CONTROL PIPE STA 39+70 TO STA 41+40 AND TYPICAL TRAFFIC CONTROL SETUP

FILE NO.	DATE	SPEC. NO.	SHEET
298/41	DEC 2010	470	41 OF 48 SHEETS

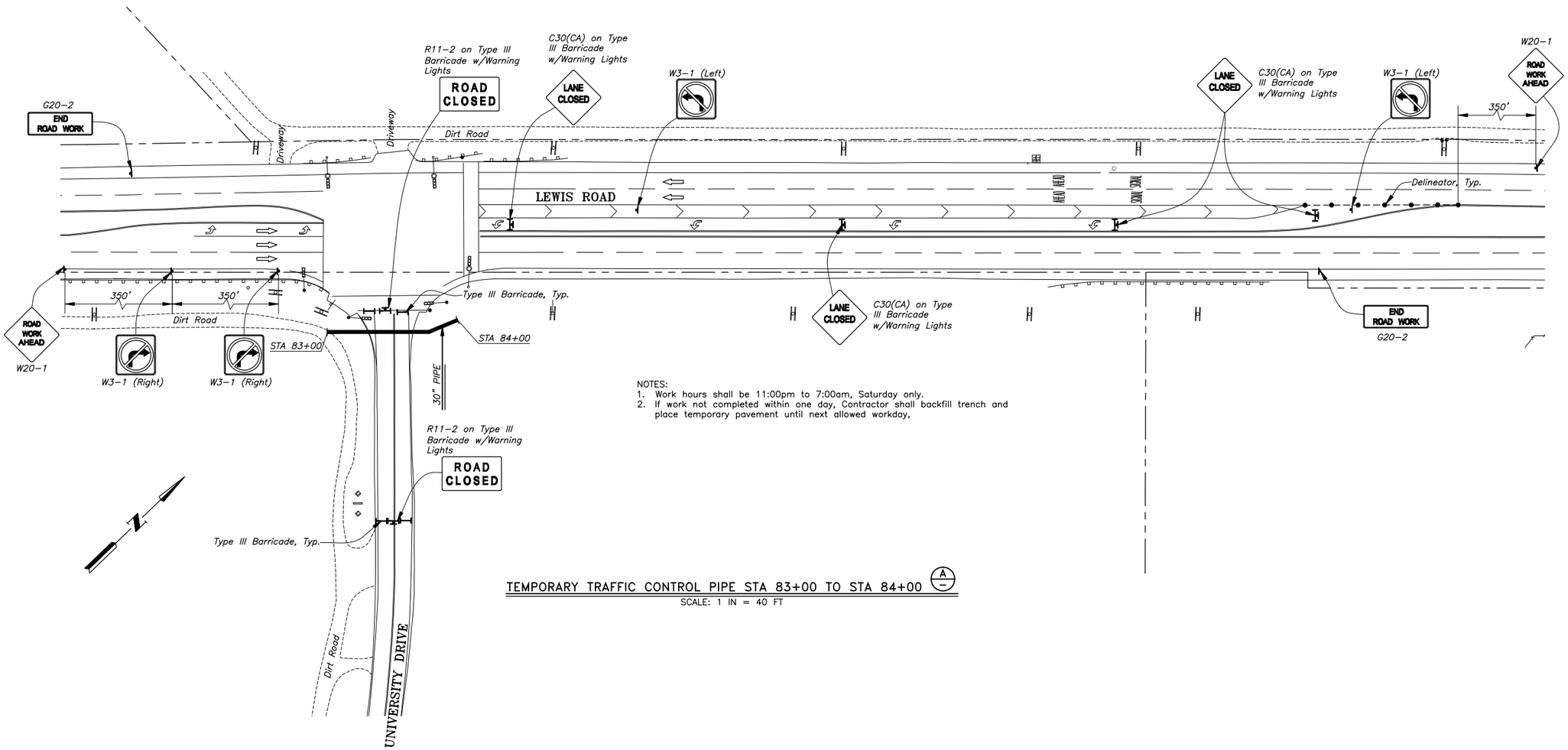

NOTES:
1. Work hours shall be 11:00pm to 7:00am, Saturday only.
2. If work not completed within one day, Contractor shall backfill trench and place temporary pavement until next allowed workday,

TEMPORARY TRAFFIC CONTROL PIPE STA 83+00 TO STA 84+00 (A)

SCALE: 1 IN = 40 FT

REVISIONS		
MARK	DATE	DESCRIPTION

DRAFT
NOT FOR CONSTRUCTION
DATE: DECEMBER 22, 2010

REGISTERED PROFESSIONAL ENGINEER REAN DAVID KUNTANE C-54285 Exp. 12-31-11 CIVIL STATE OF CALIFORNIA

CAUTION
0 1"
THIS DRAWING IS TO SCALE ONLY IF BAR MEASURES 1 INCH

PERLITER & INGALSBE
CONSULTING ENGINEERS
ALTADENA, CALIFORNIA

SUBMITTED: FOR THE CONSULTING ENGINEERS R.C.E. NO. 54285
REVIEWED: MANAGER OF ENGINEERING, CALLEGUAS MUNICIPAL WATER DISTRICT
DESIGNED: R.Y.K. DRAWN: V.T. CHECKED: R.Y.K.

CALLEGUAS MUNICIPAL WATER DISTRICT
THOUSAND OAKS, CALIFORNIA

SALINITY MANAGEMENT PIPELINE, PHASE 2A

TEMPORARY TRAFFIC CONTROL PIPE STA 83+00 TO STA 84+00

FILE NO.	DATE	SPEC. NO.	SHEET
298/42	DEC 2010	470	42 OF 48 SHEETS

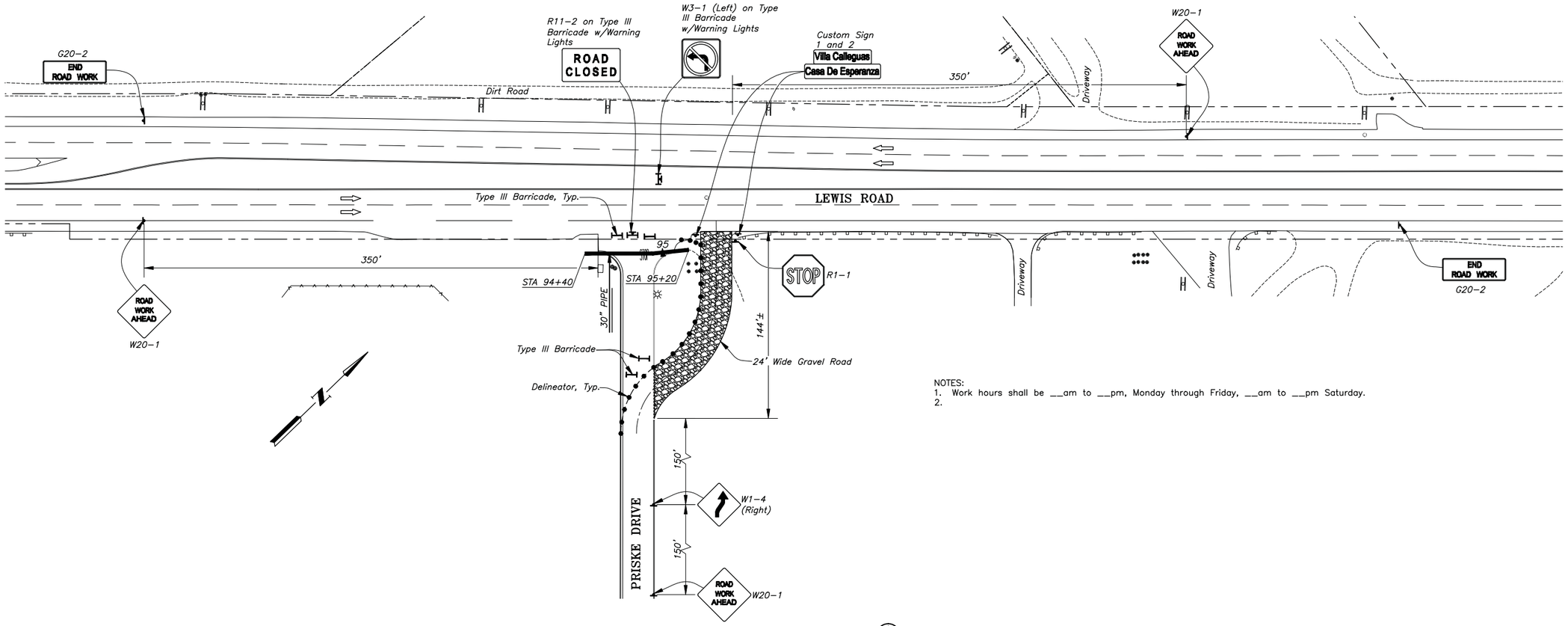

NOTES:
1. Work hours shall be __am to __pm, Monday through Friday, __am to __pm Saturday.
2.

TEMPORARY TRAFFIC CONTROL PIPE STA 94+40 TO STA 95+20 (A)

SCALE: 1 IN = 40 FT

REVISIONS		
MARK	DATE	DESCRIPTION

DRAFT
NOT FOR CONSTRUCTION
DATE: DECEMBER 22, 2010

REGISTERED PROFESSIONAL ENGINEER
REAN DAVID KUNTAKE
C-54285
Exp. 12-31-11
CIVIL
STATE OF CALIFORNIA

CAUTION
0 1"
THIS DRAWING IS TO SCALE ONLY IF BAR MEASURES 1 INCH

PERLITER & INGALSBE
CONSULTING ENGINEERS
ALTADENA, CALIFORNIA

SUBMITTED: FOR THE CONSULTING ENGINEERS R.C.E. NO. 54285
REVIEWED: MANAGER OF ENGINEERING, CALLEGUAS MUNICIPAL WATER DISTRICT
DESIGNED: R.Y.K. DRAWN: V.T. CHECKED: R.Y.K.

CALLEGUAS MUNICIPAL WATER DISTRICT
THOUSAND OAKS, CALIFORNIA

SALINITY MANAGEMENT PIPELINE, PHASE 2A

TEMPORARY TRAFFIC CONTROL PIPE STA 94+40 TO STA 95+20

FILE NO.	DATE	SPEC. NO.	SHEET
298/43	DEC 2010	470	43 OF 48 SHEETS

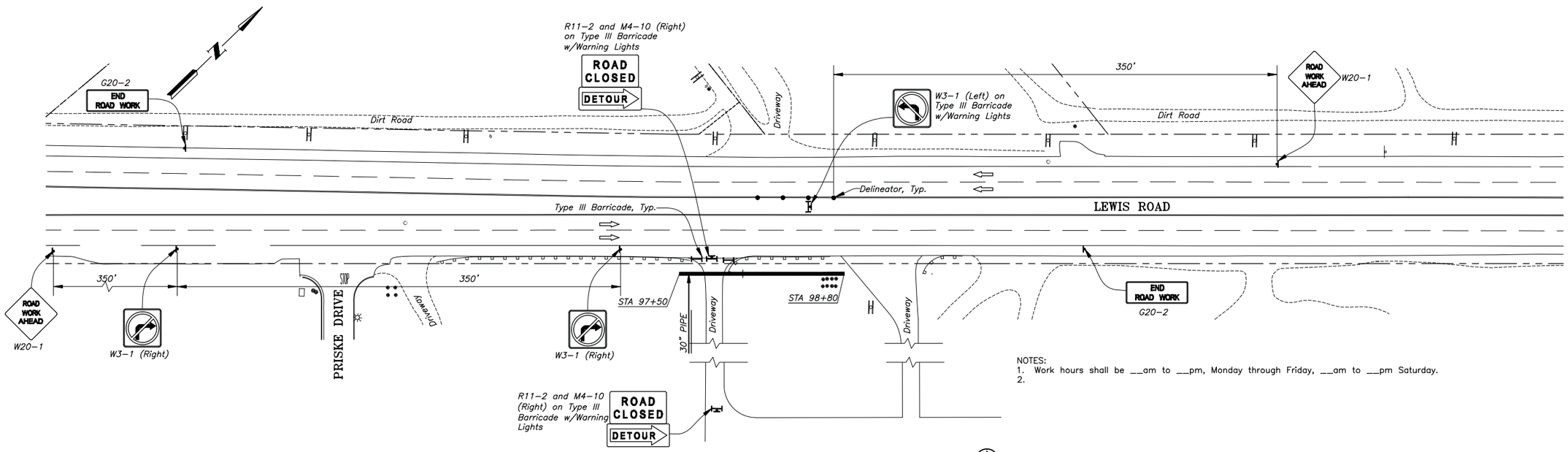

NOTES:
1. Work hours shall be __am to __pm, Monday through Friday, __am to __pm Saturday.
2.

TEMPORARY TRAFFIC CONTROL PIPE STA 97+50 TO STA 98+80 (A)

SCALE: 1 IN = 40 FT

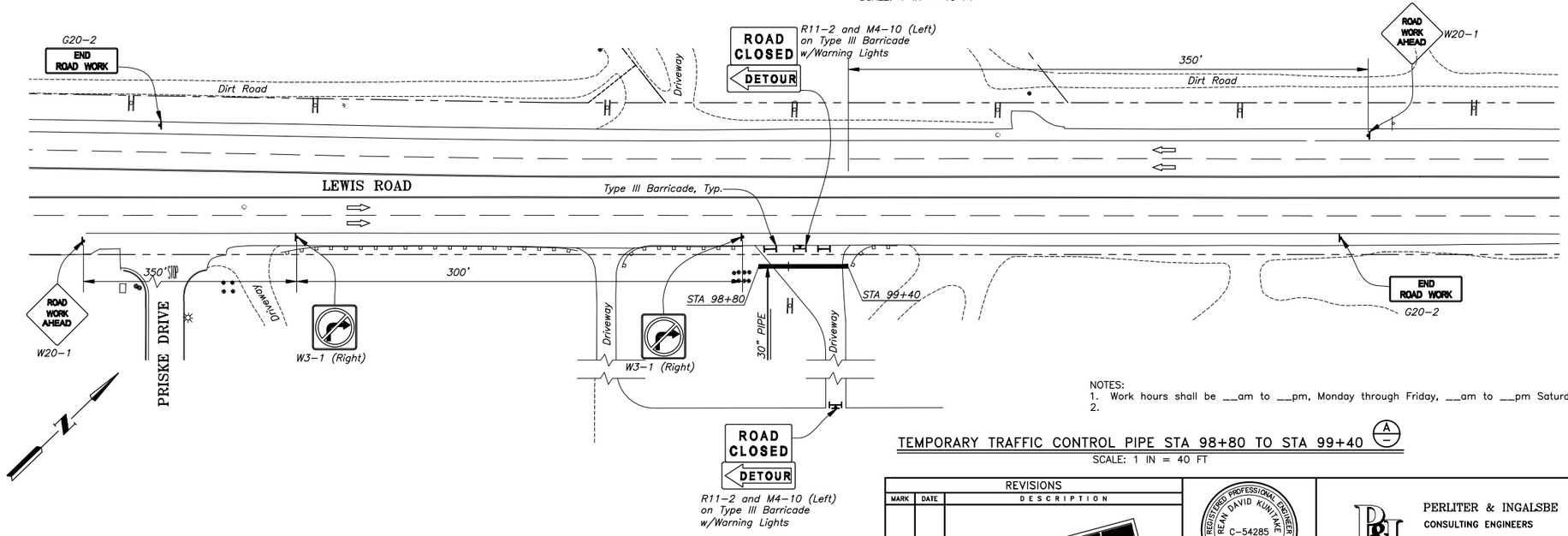

NOTES:
1. Work hours shall be __am to __pm, Monday through Friday, __am to __pm Saturday.
2.

TEMPORARY TRAFFIC CONTROL PIPE STA 98+80 TO STA 99+40 (A)

SCALE: 1 IN = 40 FT

REVISIONS		
MARK	DATE	DESCRIPTION

DRAFT
NOT FOR CONSTRUCTION
DATE: DECEMBER 22, 2010

REGISTERED PROFESSIONAL ENGINEER — REAN DAVID KUNTZ — C-54285 — Exp. 12-31-11 — CIVIL — STATE OF CALIFORNIA

CAUTION
0 1"
THIS DRAWING IS TO SCALE ONLY IF BAR MEASURES 1 INCH

PERLITER & INGALSBE
CONSULTING ENGINEERS
ALTADENA, CALIFORNIA

SUBMITTED: FOR THE CONSULTING ENGINEERS — R.C.E. NO. 54285
REVIEWED: MANAGER OF ENGINEERING, CALLEGUAS MUNICIPAL WATER DISTRICT
DESIGNED: R.Y.K. | DRAWN: V.T. | CHECKED: R.Y.K.

CALLEGUAS MUNICIPAL WATER DISTRICT
THOUSAND OAKS, CALIFORNIA

SALINITY MANAGEMENT PIPELINE, PHASE 2A

TEMPORARY TRAFFIC CONTROL PIPE STA 97+50 TO STA 99+40

FILE NO.	DATE	SPEC. NO.	SHEET
298/44	DEC 2010	470	44 OF 48 SHEETS

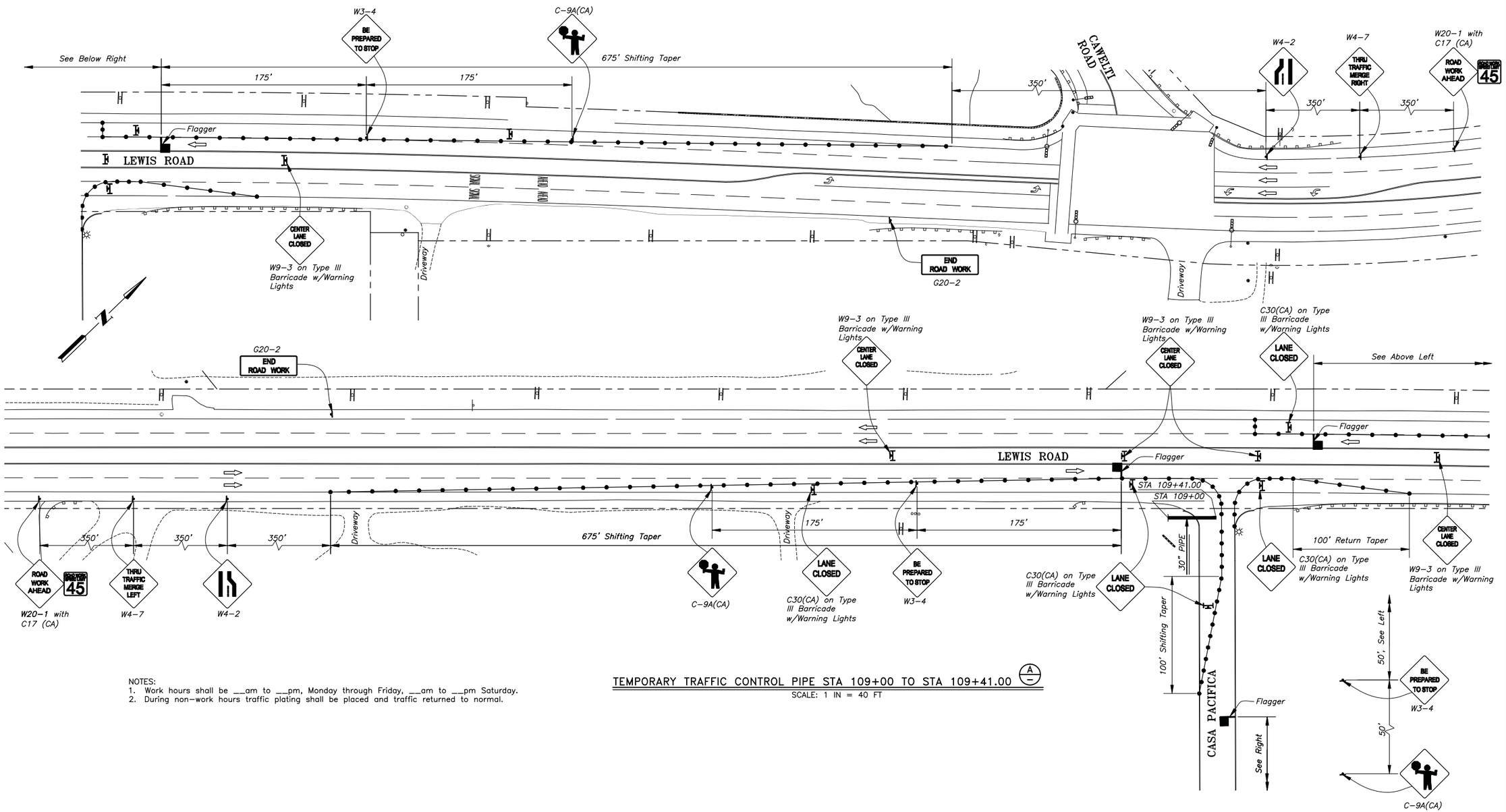

NOTES:
1. Work hours shall be __am to __pm, Monday through Friday, __am to __pm Saturday.
2. During non-work hours traffic plating shall be placed and traffic returned to normal.

TEMPORARY TRAFFIC CONTROL PIPE STA 109+00 TO STA 109+41.00 (A)

SCALE: 1 IN = 40 FT

REVISIONS		
MARK	DATE	DESCRIPTION

DRAFT
NOT FOR CONSTRUCTION
DATE: DECEMBER 22, 2010

REGISTERED PROFESSIONAL ENGINEER
REAN DAVID KUNITAKE
C-54285
Exp. 12-31-11
CIVIL
STATE OF CALIFORNIA

CAUTION
0 1"
THIS DRAWING IS TO SCALE ONLY IF BAR MEASURES 1 INCH

PERLITER & INGALSBE
CONSULTING ENGINEERS
ALTADENA, CALIFORNIA

SUBMITTED: FOR THE CONSULTING ENGINEERS R.C.E. NO. 54285
REVIEWED: MANAGER OF ENGINEERING, CALLEGUAS MUNICIPAL WATER DISTRICT
DESIGNED: R.Y.K. DRAWN: V.T. CHECKED: R.Y.K.

CALLEGUAS MUNICIPAL WATER DISTRICT
THOUSAND OAKS, CALIFORNIA

SALINITY MANAGEMENT PIPELINE, PHASE 2A

TEMPORARY TRAFFIC CONTROL
PIPE STA 109+00 TO STA 109+41.00

FILE NO.	DATE	SPEC. NO.	SHEET
298/45	DEC 2010	470	45 OF 48 SHEETS

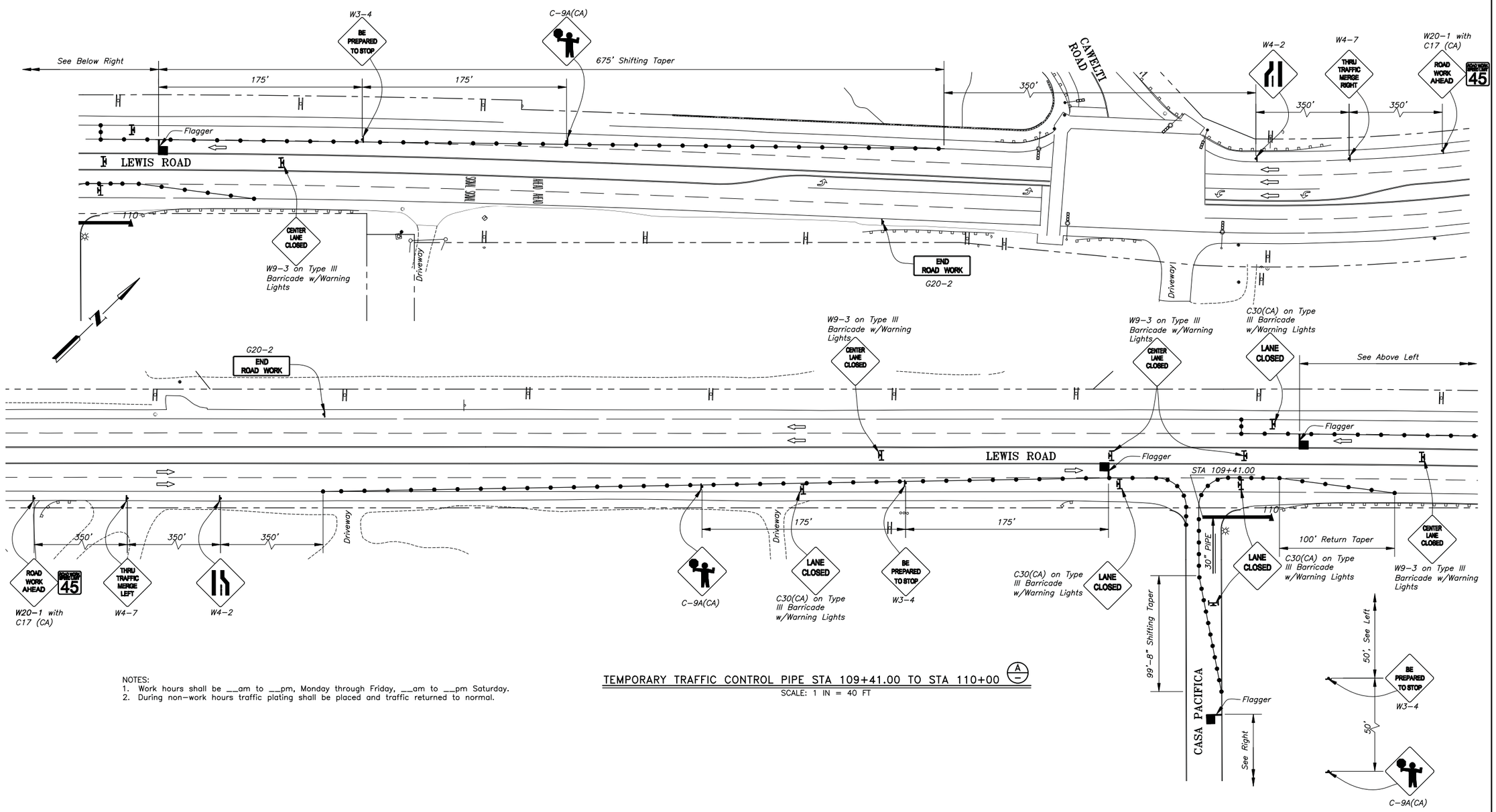

NOTES:
1. Work hours shall be __am to __pm, Monday through Friday, __am to __pm Saturday.
2. During non-work hours traffic plating shall be placed and traffic returned to normal.

TEMPORARY TRAFFIC CONTROL PIPE STA 109+41.00 TO STA 110+00 (A)

SCALE: 1 IN = 40 FT

REVISIONS		
MARK	DATE	DESCRIPTION

DRAFT
NOT FOR CONSTRUCTION
DATE: DECEMBER 22, 2010

REGISTERED PROFESSIONAL ENGINEER — REAN DAVID KUNTANG — C-54285 — Exp. 12-31-11 — CIVIL — STATE OF CALIFORNIA

CAUTION
0 1"
THIS DRAWING IS TO SCALE ONLY IF BAR MEASURES 1 INCH

PERLITER & INGALSBE
CONSULTING ENGINEERS
ALTADENA, CALIFORNIA

SUBMITTED: FOR THE CONSULTING ENGINEERS — R.C.E. NO. 54285
REVIEWED: MANAGER OF ENGINEERING, CALLEGUAS MUNICIPAL WATER DISTRICT
DESIGNED: R.Y.K. DRAWN: V.T. CHECKED: R.Y.K.

CALLEGUAS MUNICIPAL WATER DISTRICT
THOUSAND OAKS, CALIFORNIA

SALINITY MANAGEMENT PIPELINE, PHASE 2A

TEMPORARY TRAFFIC CONTROL
PIPE STA 109+41.00 TO STA 110+00

FILE NO.	DATE	SPEC. NO.	SHEET
298/46	DEC 2010	470	46 OF 48 SHEETS

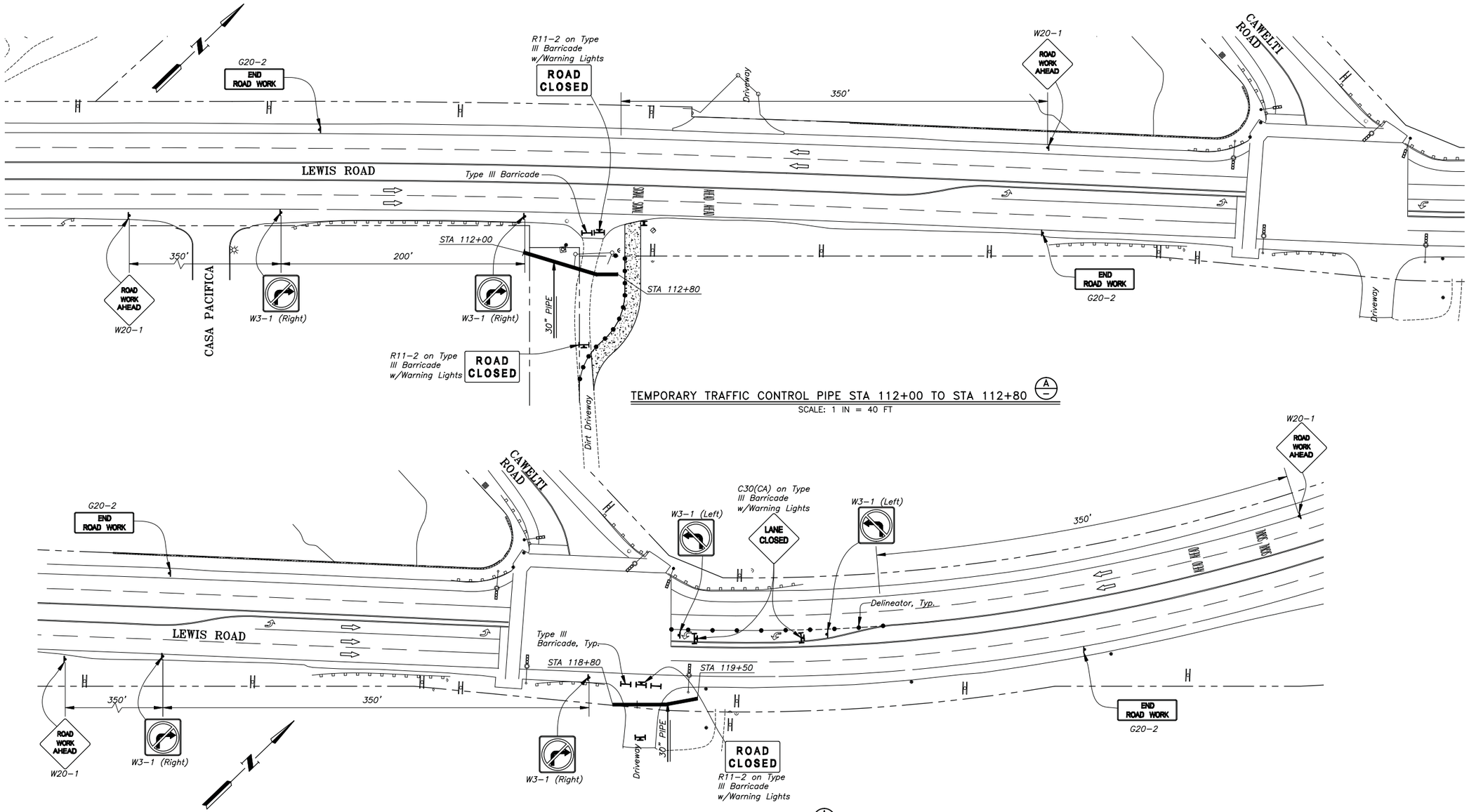

NOTES:
1. Work hours shall be __am to __pm, Monday through Friday, __am to __pm Saturday.
2. During non-work hours traffic plating shall be placed and traffic returned to normal.

REVISIONS		
MARK	DATE	DESCRIPTION
		DRAFT NOT FOR CONSTRUCTION DATE: DECEMBER 22, 2010

REGISTERED PROFESSIONAL ENGINEER REAN DAVID KUNTAKE C-54285 Exp. 12-31-11 CIVIL STATE OF CALIFORNIA

CAUTION 0 1" THIS DRAWING IS TO SCALE ONLY IF BAR MEASURES 1 INCH

PERLITER & INGALSBE CONSULTING ENGINEERS ALTADENA, CALIFORNIA

SUBMITTED: FOR THE CONSULTING ENGINEERS R.C.E. NO. 54285
REVIEWED: MANAGER OF ENGINEERING, CALLEGUAS MUNICIPAL WATER DISTRICT
DESIGNED: R.Y.K. DRAWN: V.T. CHECKED: R.Y.K.

CALLEGUAS MUNICIPAL WATER DISTRICT
THOUSAND OAKS, CALIFORNIA

SALINITY MANAGEMENT PIPELINE, PHASE 2A

TEMPORARY TRAFFIC CONTROL PIPE STA 112+00 TO STA 112+80 AND STA 118+80 TO STA 119+50

FILE NO.	DATE	SPEC. NO.	SHEET
298/47	DEC 2010	470	47 OF 48 SHEETS

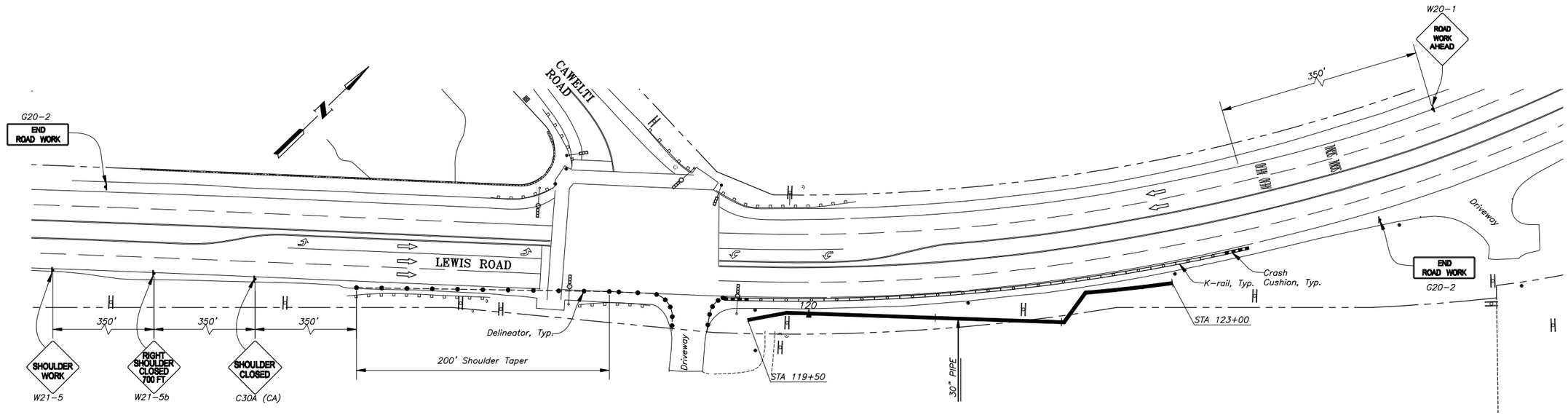

NOTES:
1. Work hours shall be __am to __pm, Monday through Friday, __am to __pm Saturday.
2.

TEMPORARY TRAFFIC CONTROL PIPE STA 119+50 TO STA 123+00 (A/–)

SCALE: 1 IN = 40 FT

REVISIONS		
MARK	DATE	DESCRIPTION

DRAFT
NOT FOR CONSTRUCTION
DATE: DECEMBER 22, 2010

REGISTERED PROFESSIONAL ENGINEER
REAN DAVID KUNITAKE
C-54285
Exp. 12-31-11
CIVIL
STATE OF CALIFORNIA

CAUTION
0 1"
THIS DRAWING IS TO SCALE ONLY IF BAR MEASURES 1 INCH

PERLITER & INGALSBE
CONSULTING ENGINEERS
ALTADENA, CALIFORNIA

SUBMITTED: FOR THE CONSULTING ENGINEERS R.C.E. NO. 54285
REVIEWED: MANAGER OF ENGINEERING, CALLEGUAS MUNICIPAL WATER DISTRICT
DESIGNED: R.Y.K. DRAWN: V.T. CHECKED: R.Y.K.

CALLEGUAS MUNICIPAL WATER DISTRICT
THOUSAND OAKS, CALIFORNIA
SALINITY MANAGEMENT PIPELINE, PHASE 2A
TEMPORARY TRAFFIC CONTROL
PIPE STA 119+50 TO STA 123+00

FILE NO.	DATE	SPEC. NO.	SHEET
298/48	DEC 2010	470	48 OF 48 SHEETS

Calleguas Municipal Water District
Thousand Oaks, California

Specifications No. 470
for the Construction of

SALINITY MANAGEMENT PIPELINE, PHASE 2A

December 2010

60% Submittal

Perliter & Ingalsbe
Consulting Engineers

Calleguas Municipal Water District
Thousand Oaks, California

Specifications No. 470
for the Construction of

SALINITY MANAGEMENT PIPELINE, PHASE 2A

BOARD OF DIRECTORS

Ted Grandsen, President
William R. Seaver, Vice President
Donald G. Hauser, Secretary
Gail L. Pringle, Treasurer
Scott H. Quady, Director

****

Susan B. Mulligan, General Manager
Kristine McCaffrey, Manager of Engineering
Robert Beamer, Senior Project Manager

December 2010

TABLE OF CONTENTS

NOTICE INVITING BIDS ..... Page No.

N-1 Bid Opening N-1
N-2 Description of Work N-1
N-3 Mandatory Pre-Bid Meeting and Site Visit N-2
N-4 Contract Documents N-2
N-5 Bid Security N-2
N-6 Performance Bond, Payment Bond and Warranty N-3
N-7 Prevailing Wages N-3
N-8 Bidder's Licenses and Experience N-3
N-9 HDPE Pipe Fabricators' and Manufacturers' Experience and Qualifications N-5
N-10 Welded Steel Pipe Fabricators' and Manufacturers' Experience and Qualifications N-6
N-11 Fabricators' and Manufacturers' Experience N-7
N-12 Project Information/Requests for Information or Clarification (RFI/RFC) N-7
N-13 Substitution of Securities N-8
N-14 Hostile or Harassing Behavior N-8
N-15 Calleguas' Rights N-8
N-16 Federally Assisted Construction N-8
N-17 Labor Compliance Program N-8

INSTRUCTIONS TO BIDDERS

I-1. Form of Bid I-1
I-2. Address and Marking of Bid I-2
I-3. Execution of Bid I-2
I-4. Local Conditions I-3
1. Bidder's Due Diligence I-3
2. Further Acknowledgments and Obligations of Bidder I-3
I-5. Quantities I-4
I-6. Licenses I-4
I-7. Preparation of the Bid I-5
1. General Rules I-5
2. Requests for Information or Clarification (RFI/RFC) I-5
3. Bid Schedule(s) I-5
4. Bid Security I-6
5. Information Required of Bidders I-7
a. Names and Addresses I-7
b. Performance of Comparable Work I-7
c. Subcontractors List I-7
(1) Ineligible Subcontractors I-8
6. Noncollusion Affidavit I-8
I-8. Withdrawal or Modification of Bid I-8
I-9. Award of Contract - Selection of Lowest Responsible Bidder I-8

I-10. Execution of Contract and Other Requirements of the Lowest Responsible Bidder.....I-9
I-11. Bonds Required of Successful Bidder I-10
1. Calleguas Bonds.....I-10
a. Faithful Performance Bond.....I-10
(1) Warranty Language.....I-11
b. Payment Bond.....I-11
2. Form of Bond and Required Surety Information.....I-11
3. Naming of Surety.....I-11
I-12. Workers' Compensation and Employer's Liability Insurance Required of the Contractor I-11
I-13. Liability Insurance Required of the Contractor I-12
1. General Liability I-12
2. Automobile Liability.....I-14
3. Additional Requirements I-14
I-14. Loss or Damage to the Work During the Course of Construction.....I-16
Notice of Requirement for Affirmative Action to Ensure Equal Employment Opportunity.....I-18

PROPOSAL

Bidder's Declaration.....P-1
Bidder's Bond.....P-4
Bid Schedule.....P-5
Information Required of the Bidder P-14
Non-Collusion Affidavit.....P-26
Certification of Bidder Regarding Equal Employment Opportunity.....P-27
Certification by Proposed Subcontractor Regarding Equal Employment Opportunity P-29
Certifications Regarding Debarment, Suspension and Other Responsibility Matters, Drug-Free Workplace Requirements and Lobbying P-31
Disclosure of Lobbying Activities.....P-35

AGREEMENT AND BONDS

Agreement..... A-1
Bond for Faithful Performance.....B-1
Payment Bond.....B-3
Contractor's Certification Concerning Labor Standards and Prevailing Wage Requirements B-5
Subcontractor's Certification Concerning Labor Standards and Prevailing Wage Requirements B-7

WELDED STEEL PIPE MANUFACTURER EXPERIENCE

Welded Steel Pipe Manufacturer Experience WSP-1

HDPE PIPE MANUFACTURER EXPERIENCE

HDPE Pipe Manufacturer Experience HDPE-1

SPECIFICATIONS - GENERAL CONDITIONS

1. Terms, Definitions and Preliminary Matters GC-1
1.1. The Contract Documents Defined GC-1
1.1.1. References to Specifications/Standards GC-1
1.1.2. Words with a Technical or Trade Meaning GC-1
1.2. Supplements or Modifications to the Contract Documents GC-1
1.2.1. Request for Interpretation/Clarification GC-1
1.2.2. Notices GC-2
1.3. Contract Documents Complementary GC-2
1.4. Order of Precedence GC-2
1.4.1. Contract Documents GC-2
1.4.2. Most Restrictive Requirements Apply GC-2
1.4.3. Dimensions GC-2
1.4.4. Compliance Shall Not be Considered Extra Work GC-2
1.5. The “Drawings” or “Plans” GC-3
1.5.1. Drawings May Not Represent Actual Conditions GC-3
1.5.2. Additional Drawings GC-3
1.6. Right-of-Way GC-3
1.6.1. Work Areas Furnished by Calleguas Shown in Contract Documents GC-3
1.6.2. Contractor to Acquire Any Additional Work Areas GC-3
1.6.3. Contractor Does Not Have Exclusive Use of Right-of-Way GC-3
1.6.3.1. Calleguas to Decide Which Contractor Shall Cease Work GC-3
1.6.3.2. Contractor Shall Not Unnecessarily Interfere with Other Contractors GC-4
1.6.4. Contractor to Proceed with Work in Areas Where Right-of-Way has been Acquired GC-4
1.7. Definitions GC-4
1.8. Calleguas Personnel and Authority GC-7
1.8.1. Board of Directors GC-7
1.8.2. Project Manager GC-7
1.8.3. Construction Inspector GC-7
1.8.4. Materials Inspector GC-7
1.8.5. Engineer GC-7
1.8.6. Surveyors GC-7
1.8.7. Other Persons GC-7
1.8.8. Authority of Calleguas GC-8
1.9. Contractor’s Personnel and Authority GC-8
1.9.1. The Contractor’s Representatives GC-8
1.9.1.1. The Contractor’s Project Manager GC-8
1.9.1.2 Contractor’s Superintendent GC-8
1.9.2. Contractor’s Representative to Give Personal Attention GC-8
1.9.3. Replacement of Project Manager/Project Superintendent GC-8
1.9.4. Notices to the Contractor GC-9
1.9.4.1. Service by Mail GC-9
1.9.4.2. Personal Service or Service by Fax or E-mail GC-9
1.9.4.3. Contractor's Phone and Fax Numbers and E-mail Address GC-9
1.9.4.4. One Hour Response Required for Emergencies GC-9

1.10. Specification Language and Style GC-9
2. Time and Order of the Work GC-10
2.1. Time Is of the Essence GC-10
2.1.1. Notice to Proceed is Authorization to Begin Work GC-10
2.1.2. Contractor Responsible for Means and Methods GC-10
2.1.3. The Contractor Must Maintain the Required Progress GC-10
2.2. Liquidated Damages-Failure to Complete on Time GC-10
2.2.1. Documentation is an Essential Element of the Work GC-11
2.2.2. Determining Whether the Work is Complete GC-11
2.3. Delays GC-11
2.3.1. Timely Completion of Work Required GC-11
2.3.2. No Payment or Extension of Time GC-12
2.3.3. Materials and Equipment Must Be Ordered Timely GC-12
2.3.4. Suspension of the Work by Calleguas GC-12
2.3.5. Suspension or Delay of the Work due to Weather Conditions GC-13
2.3.5.1. Regular Starting Time GC-13
2.3.6. Suspension or Delay of the Work Due to Contractor's Actions GC-13
2.3.7. Suspension of the Work for the Convenience or Benefit of Calleguas GC-13
2.3.8. Delays Due to the Unreasonable Acts or Omission of Calleguas GC-14
2.3.9. Delays Due to Force Majeure GC-14
2.3.10. Procedure to Apply for Extension of Time and/or Payment Due to Delay GC-15
2.3.10.1. Notice Required Within One Working Day GC-15
2.3.10.2. Daily Work Reports Required to Recover Costs GC-15
2.3.10.3. Time Extensions GC-16
2.3.10.4. Revised Schedule of Progress GC-16
3. Changes to the Work GC-16
3.1. Changes by Calleguas GC-16
3.1.1. Field Orders GC-16
3.1.2. Work Change Directives GC-16
3.1.3. Change Orders GC-17
3.2. Procedure to Apply for Extension of Time and/or Payment for Changes to Work or Extra Work GC-17
3.3. Payment for Increases and Decreases to Bid Items - Applicable Rules GC-18
3.3.1. Decreases in Bid Items GC-18
3.3.2. Increases in Bid Items GC-18
3.4. Payment for Extra Work GC-19
3.4.1. Contractor to Perform Ordered Extra Work GC-19
3.4.2. Extra Work Must Be Ordered in Writing GC-19
3.4.3. Payment Normally to be Agreed in Advance GC-19
3.4.4. Option to Use Time and Materials GC-19
3.4.5. Work Comparable To Unit Price Items GC-19
3.4.6. Time and Materials Work GC-19
3.4.7. Labor GC-20
3.4.8. Materials GC-21
3.4.9. Equipment GC-21
3.4.9.1. Rental Rates to be All Inclusive GC-21
3.4.9.2. Operating Condition of Equipment GC-21

3.4.9.3. Manufacturer's Ratings GC-21
3.4.9.4. Small Tools GC-22
3.4.9.5. Inoperative Equipment GC-22
3.4.9.6. Idle Equipment GC-22
3.4.9.7. Equipment on the Work GC-22
3.4.10. Special Services GC-22
3.4.10.1. Use of Specialist GC-22
3.4.10.2. Evidence of Cost of Special Services GC-23
3.4.10.3. Special Fabricator or Machining GC-23
3.4.10.4. Overhead and Profit Allowance GC-23
3.4.11. Contractor to Reach Agreement with Other Forces GC-23
3.4.12. Contract Provisions Apply to Special Services GC-23
3.5. Services During an Emergency GC-23
3.5.1. Contractor's Obligations to Assist GC-23
3.5.2. Mobilization of Equipment and Personnel GC-23
3.5.3. Compensation GC-23
3.6. Changes by the Contractor GC-24
3.6.1. Proposed "Or-Equal" Items GC-24
3.6.2. Proposed Deviations GC-25
4. Materials and Workmanship GC-26
4.1. Access to Work GC-26
4.2. Workmanship GC-26
4.3. Materials GC-26
4.3.1. Materials to be New and Conforming GC-26
4.3.2. Materials Contacting Potable Water GC-26
4.3.3. Materials to Equal Accepted Samples GC-26
4.3.4. Orders Shall Carry Notation GC-26
4.3.5. Materials Furnished by Calleguas GC-26
4.3.6. Coordinated and Adequate Design GC-27
4.3.7. Care of the Work and Materials GC-27
.4.3.7.1. Damage or Loss-Acts of God GC-27
4.4. Inspections and Tests GC-27
4.4.1. Readiness for Inspection GC-27
4.4.2. Mill-Test Reports GC-28
4.4.3. Samples, Test Specimens or Test Pieces GC-28
4.4.4. Right to Reject Articles and/or Materials GC-28
4.4.5. Replacement of Rejected Materials GC-28
4.4.6. Inspections at Fabrication Facilities GC-28
4.4.6.1. All Materials and Equipment Subject to Factory Inspection GC-28
4.4.6.2. Scheduling of Inspections at Fabrication Facilities GC-28
4.4.6.3. Safe Access to be Provided GC-28
4.5. Examination of Work Done Without Inspection GC-29
4.6. Examination of Finished or Previously Accepted Work GC-29
4.7. Defective Work or Materials GC-29
4.7.1. Contractor's Payment Obligation GC-29
4.7.2. Inspection by Calleguas Does Not Relieve the Contractor of Obligations GC-30

4.7.3. Contractor Responsible for Defective Materials Unless Supplied by Calleguas GC-30
4.7.4. Rejected Materials GC-30
4.7.5. Failure to Make Ordered Repairs GC-30
4.8. Acceptance of Work Not a Waiver GC-30
4.9. Permit Compliance Inspections GC-30
4.10. Salvage GC-31
5. Performance of the Work GC-31
5.1. Completion of the Work GC-31
5.1.1. Contractor to Complete Work at Prices Fixed in Contract Documents GC-31
5.1.2. Contractor to Furnish All Material Labor and Services GC-31
5.2. Contractor to Furnish Information GC-31
5.3. Specifications and Drawings/Review by Contractor GC-31
5.4. Changed Conditions GC-32
5.4.1. Risk of Unforeseen Obstructions or Difficulties is on Contractor GC-32
5.4.2. Exception: Changed Conditions GC-32
5.4.2.1. Calleguas to Investigate GC-32
5.4.2.2. Contractor to Proceed with Work GC-32
5.4.2.3. HAZWOPER Training is not Extra Work GC-33
5.4.2.4. Failure to Give Proper Written Notice Constitutes Waiver GC-33
5.5. Laws and Regulations GC-33
5.5.1. Contractor to be Fully Informed GC-33
5.5.2. Contractor to Comply With All Applicable Laws and Permit Requirements GC-33
5.5.3. Discrepancy or Inconsistency in Contract Documents GC-33
5.5.4. Incorporation of Mandatory Terms, Provisions, and Codes GC-33
5.5.5. Contractor to Pay Fines/Damages GC-33
5.6. Contamination and Pollution GC-34
5.7. Permits/Licenses/Taxes GC-34
5.8. Hazardous Materials and Hazardous Waste GC-34
5.8.1. Hazardous Substance, Hazardous Waste, or Asbestos-Related Work GC-34
5.8.2. Hazardous Material GC-34
5.8.3. Hazardous Waste GC-34
5.9. Contractor's Responsibility for Defense and Indemnification GC-35
5.9.1. Definitions . As used herein: GC-35
5.9.2. Duty to Indemnify GC-35
5.9.3. Duty to Defend GC-36
5.9.4. Reimbursement Obligation GC-36
5.9.5. Insurance Proceeds GC-36
5.9.6. Subcontractor's Duties of Defense and Indemnity GC-36
5.10. Trespass GC-36
5.11. Patents and Copyrights GC-36
5.12. Subcontracts GC-36
5.12.1. Subcontracts Permitted at Calleguas' Discretion GC-36
5.12.2. Public Contract Code Sections 4100 et seq. GC-36
5.12.3. Subcontracts Allowed in Calleguas' Direction GC-37
5.12.4. Subcontractor's Failure to Comply with Contract Documents GC-37

5.12.5. Terms of Subcontract(s) Terms To Be Supplied To Calleguas Upon Demand GC-37
5.13. Employment of Labor GC-38
5.13.1. Contractor To Comply With Labor Laws GC-38
5.13.2. Character of Workers GC-38
5.13.3. Convict Labor GC-38
5.13.4. Employment of Apprentices GC-38
5.13.5. Labor Code Provisions to be Included in Contracts with Subcontractors GC-38
5.14. Prevailing Rates of Wages GC-38
5.15. Form of Payment GC-39
5.16. Payroll Records GC-39
5.17. Hours/Days/Nondiscrimination GC-39
5.18. Overtime GC-39
5.18.1. Overtime Work GC-39
5.18.2. Written Permission Required for Overtime and Shift Work as a Regular Procedure GC-39
5.18.3. Overtime Inspection Costs GC-40
5.19. Enforcement of Order GC-40
5.20. General Safety and Protection GC-40
5.20.1. Contractor Responsible for Safety and Protection GC-40
5.20.2. Compliance with Safety Laws and Regulations GC-40
5.20.3. Notification to Property Owners GC-41
5.20.4. Contractor Liable for Damages, Injury or Loss of Property GC-41
5.20.5. Duration of Contractor's Responsibility for Safety GC-41
5.20.6. Inadequate Methods, Tools or Equipment GC-41
5.20.7. Sufficiency of Plant, Tools, Equipment and Methods GC-41
5.21. Public Convenience and Safety GC-41
5.21.1. General GC-41
5.21.2. Signs, Barricades, Warnings, Etc GC-41
5.21.3. Traffic Maintenance GC-42
5.21.4. Timing of Placement of Temporary Traffic Control Devices GC-42
5.22. Protection of Calleguas' Facilities GC-42
5.23. Maintenance of Existing Improvements GC-42
5.23.1. Protection of Existing Improvements GC-42
5.23.2. Damage to Existing Improvements GC-42
5.23.3. Protection of Existing Fences, Plants, Etc GC-43
5.23.4. Protection of Existing Calleguas Pipelines GC-43
5.23.5. Relocation of Improvements GC-43
5.24. Maintenance of Other Rights-of-Way and Structures GC-43
5.25. Protecting Existing and Underground Lines and Utilities GC-43
5.25.1. Some Information on Drawings GC-43
5.25.2. Information on Drawings May Not Represent Current Conditions GC-43
5.25.3. Contractor Responsible for Determining Subsurface Conditions GC-44
5.25.4. Contractor to Comply with Underground Service Alert Laws GC-44
5.25.5. Caltrans, Railroads and Other Nonmembers GC-44
5.25.6. Utility Marking GC-44
5.25.7. Potholing GC-44

5.25.8. Precise Alignment GC-45
5.25.9. Surveying GC-45
5.25.10. Potholing Report GC-45
5.25.11. Use of Extreme Caution GC-45
5.26. Interference with Fire Hydrants, Highways and Fences GC-46
5.27. Restoration of Streets, Roads and Driveways GC-46
5.27.1. General GC-46
5.27.2. Limits of Restored Paving GC-46
5.28. Dust Abatement GC-46
5.28.1. Prevention of Dust GC-46
5.28.2. Damage from Dust GC-46
5.29. Sanitation GC-47
5.29.1. Sanitation is the Responsibility of Contractor GC-47
5.29.2. Contractor to Indemnify Against Improper Sanitation GC-47
5.30. Coordination with Other Projects GC-47
5.31 Clean Up and Maintenance GC-47
5.31.1. Maintenance During the Work GC-47
5.31.2. Maintenance Upon Completion of the Work GC-47
5.32. Record Drawings, Record Layout Sheets, and Record Electrical and Instrumentation Documentation GC-48
5.32.1. Record Drawings GC-48
5.32.2. Record Layout Sheets GC-48
5.32.3. Record Electrical and Instrumentation Documentation and Software GC-48
5.32.4. Record Drawings Precedent to Payment and Acceptance of Work GC-48
5.33. Lines, Grades and Measurements GC-48
6. Payment for the Work GC-49
6.1. Payment Only in Accordance with the Contract GC-49
6.2. Monies May Be Retained GC-49
6.3. The Partial Estimates/Payment Process GC-49
6.3.1. Exception to the Process GC-49
6.3.2. Monthly Estimates and Payments GC-49
6.3.3. Unit Price Work GC-49
6.3.4. Lump Sum Work GC-49
6.3.5. Retention GC-50
6.3.6. When Materials Included in Partial Estimates GC-50
6.3.7. Partial Payment Requests GC-50
6.3.8. Amounts Reserved/Retained GC-50
6.3.9. Partial Estimates and Payments May Be Withheld GC-50
6.3.10. Partial Payments GC-51
6.3.10.1. Payment within 30 Calendar Days GC-51
6.3.10.2. Public Contract Code Section 20104.50 ....GC-51
6.3.10.3. The Retained Percentage/Termination or Discontinuance of Work GC-51
6.4. Final Estimate and Payment GC-51
6.4.1. Contractor's Certificate of Completion/Statement of Acceptance or Exceptions GC-51
6.4.2. Notice of Completion GC-52
6.4.3. The Final Estimate GC-52

6.4.4. Warranty GC-52
6.5. No Payment for Temporary Work GC-53
6.6. Substitution of Securities for Withheld Funds GC-53
6.6.1. Public Contract Code Section 22300 ....GC-53
6.6.2. Escrow Agreement GC-53
6.7. False or Erroneous Certificates GC-53
6.8. Termination of Calleguas' Liability GC-54
6.8.1. No Claims Except as Allowed by the Contract Documents GC-54
6.8.2. No Final Payment Without Release on Contract Form Listing Unsettled Claims GC-54
6.8.3. Stop Notices GC-54
6.8.4. Disputes Over Payment GC-55
7. Discontinuance or Termination of the Work GC-55
7.1. Discontinuance of Work GC-55
7.1.1. Notice to Discontinue Work Under Contract GC-55
7.1.2. Notice to Surety GC-56
7.1.3. Process After Notice of Discontinuance GC-56
7.2. Termination of Contract GC-57
7.2.1. Termination by Calleguas GC-57
7.2.2. Termination by Request of Contractor GC-57
7.2.3. Process After Notice of Termination GC-57
7.2.4. Payment Upon Termination of Contract GC-57
8. Protests and Claims GC-58
8.1. Disputes to be Brought To Calleguas' Attention GC-58
8.2. Protest and Claims Procedure GC-58
8.2.1. Notice of Protest Required Within One Working Day GC-58
8.2.2. Confirmation GC-59
8.2.3. Daily Work Report Required While Performing Protested Work GC-59
8.2.3.1. Failure to Submit Daily Work Report Constitutes Waiver GC-59
8.2.4. Execution of Daily Work Report GC-59
8.2.5. Submittal of Claim GC-60
8.2.5.1. Timing GC-60
8.2.5.2. Form of Claim GC-60
8.2.5.3. Certification Under Penalty of Perjury GC-60
8.2.5.4. Substantiation Required GC-61
8.2.5.5. Waiver of Protest or Claim GC-61
8.2.6. Response to Claim GC-61
8.2.6.1. Additional Documentation GC-61
8.2.6.2. Timing on Claims Less than or Equal to $50,000.00 ....GC-61
8.2.6.3. Timing on Claims Greater than $50,000.00 and Less than or Equal to $375,000.00 ....GC-62
8.2.7. Meet and Confer GC-62
8.2.7.1. Contractor Must Demand Meet and Confer GC-62
8.2.7.1.1. Calleguas to Schedule Meet and Confer GC-62
8.2.7.1.2. Statute of Limitations for Government Code Claim GC-62
8.2.8. Procedure for Civil Actions for Claims Less than or Equal to $375,000 ....GC-62
8.2.8.1. Nonbinding Mediation GC-62

8.2.8.2. Judicial Arbitration GC-63
8.2.8.3. Fees Normally to be Split By Parties GC-63
8.2.8.4. Trial De Novo – Less Favorable Judgment – Attorney Fees Award GC-63
8.2.8.5. Attendance of Witnesses GC-63
8.2.8.6. Interest on Award GC-63
8.2.8.7. Payment on Undisputed Portion of Claims GC-63
8.3. False Claims GC-63
8.4. Right to Audit GC-64
8.5. Tort Claims GC-64
8.6. Obligation to Continue Work GC-64
9. Miscellaneous GC-64
9.1. Captions GC-64
9.2. Waiver GC-64
9.3. Partial Invalidity GC-64
9.4. Contractor Acknowledges Review of Contract Documents GC-65
9.5. Limitations on Engineer's Review of Shop Drawings and Submittals GC-65
9.5.1. Review Does Not Extend to Means and Methods GC-65
9.5.2. Review Does Not Relieve Contractor from Compliance with Contract Docs... GC-65
9.6. Antitrust Claims GC-65
9.7. Additional Surety GC-65
9.8. Assignment Forbidden GC-66
9.9. Title to Materials Found on the Work GC-66
9.10. Right of Property in Materials GC-66
9.11. Use of Completed Portions of the Work GC-66
9.12. Audit and Access to Records GC-67
9.12.1. Definition of Record GC-67
9.12.2. Contractor to Maintain Pertinent Records GC-67
9.12.3. Calleguas has The Right to Audit GC-67
9.12.4. Contractor to Provide Access Upon 24 Hours Notice GC-67
9.12.5. Applicability of Audit Provisions GC-67
9.12.6. Record Retention Period GC-67
9.12.7. Access Not Limited to Record Retention Period GC-67
9.12.8. Audit Provisions Survive Contract Termination GC-67
9.13. Attorney's Fees and Venue GC-68
9.13.1. Attorneys' Fees GC-68
9.13.2. California Law and Venue GC-68
9.14. Gender GC-68

SPECIFICATIONS - SPECIAL FEDERAL PROVISIONS AND SPECIFICATIONS

1. Special Federal Provisions and Specifications
1.1. Contracting with Small and Minority Firms, and Women's Business Enterprises FGC-1
1.2. Equal Opportunity Clause FGC-1
1.3. Standard Federal Equal Employment Opportunity Construction Contract Specifications (Executive Order 11246) FGC-2
1.4. Federal Labor Standards Provisions FGC-7

1.5. Federal Safety and Health Provisions FGC-18
1.6. Miscellaneous Provisions FGC-20

SPECIFICATIONS - SPECIAL CONDITIONS

1-01 Requirements SC-1
1-02 Completion of Work and Liquidated Damages for Delays SC-1
1-03 No Work Days SC-2
1-04 Groundwater and Surface Water SC-3
1-05 Permits and Licenses SC-3
1-06 Right-of-Way SC-5
1-07 Project Drawings SC-5
1-08 Standard Drawings SC-6
1-09 Lines, Grades and Measurements SC-6
1-10 Water Supply SC-6
1-11 Preliminary Meetings SC-7
1-12 Design SC-7
1-13 Testing of Completed Project SC-8
1-14 Coordination with Other Projects SC-8
1-15 Geotechnical Reports SC-8
1-16 Owner and Engineer Costs SC-9
1-17 Access and Construction in Public Right-of-Way SC-10
1-18 Progress Meetings SC-11
1-19 Traffic Control SC-11
1-20 Damage to Existing District Facilities SC-12
1-21 Safety SC-12
1-22 Additional Insureds SC-12
1-23 Delivery of Materials to Owner's Yard SC-12
1-24 Trench Shoring/Sheeting SC-13
1-25 Pre-Job Meeting for Trenchless Casing SC-13
1-26 Payment for Materials SC-13
1-27 Graffiti Removal SC-13
1-28 Factory Inspection and Testing SC-14
1-29 Potholing SC-14
1-30 Buy American SC-15
1-31 Requirements for Labor Compliance Program SC-18
1-32 Simultaneous Work Areas in the Public Right-of-Way SC-18
1-33 Access to Work Areas Prior to Bid Opening SC-18
1-34 Mainline Pipe Submittal SC-19
1-35 Groundwater and Surface Water SC-19

TECHNICAL PROVISIONS

Division 01 - General Requirements

01270 Bid Item Description, Measurement and Payment....01270-1 to 01270-18
01300 Submittals....01300-1 to 01300-14
01310 Progress Schedules....01310-1 to 01310-4
01510 Temporary Construction Facilities....01510-1 to 01510-6

Division 02 - Site Work

02140 Dewatering and Drainage....02140-1 to 02140-6
02150 Clearing and Grubbing....02150-1 to 02150-4
02200 Earthwork....02200-1 to 02200-8
02220 Trenching, Backfilling and Compaction....02220-1 to 02220-10
02230 Granular and Rock Materials....02230-1 to 02230-4
02250 Cement-Sand Slurry....02250-1 to 02250-4
02260 Cement-Soil Slurry....02260-1 to 02260-4
02270 Soil-Cement....02270-1 to 02270-6
02306 Microtunneling....02306-1 to 02306-22
02310 Launch and Receiving Shafts....02310-1 to 02310-6
02315 Guided Pipe Ramming....02315-1 to 02315-12
02320 Guided Auger Boring....02320-1 to 02320-10
02325 Jacked Steel Casing....02325-1 to 02325-6
02350 Installation of Pipe in Casing....02350-1 to 02350-4
02400 Sheeting, Shoring and Bracing....02400-1 to 02400-4
02510 Temporary Pavement....02510-1 to 02510-4
02512 Asphalt Concrete Pavement and Base....02512-1 to 02512-14
02525 Pavement Striping and Markings....02525-1 to 02525-6
02620 Steel Pipe and Fittings....02620-1 to 02620-22
02623 HDPE Pipe and Fittings....02623-1 to 02623-14
02625 Small Diameter PVC Pipe and Fittings....02625-1 to 02625-6
02642 Small Valves and Pipes....02642-1 to 02642-4
02644 Pipe Appurtenances....02644-1 to 02644-4
02660 Pipeline Testing....02660-1 to 02660-6
02700 Precast Concrete Manholes and Boxes....02700-1 to 02700-4
02820 Landscaping....02820-1 to 02820-10
02960 Environmental Protection....02960-1 to 02960-4
02970 Storm Water Pollution Prevention....02970-1 to 02970-4
02990 Miscellaneous Work and Cleanup....02990-1 to 02990-8

Division 03 - Concrete

03100 Concrete Formwork....03100-1 to 03100-8
03200 Concrete Reinforcement....03200-1 to 03200-10
03250 Concrete Joints and Joint Accessories....03250-1 to 03250-8
03300 Cast-in-Place Concrete....03300-1 to 03300-26
03350 Concrete Finishing....03350-1 to 03350-4
03600 Grout....03600-1 to 03600-8
03740 Modifications and Repairs to Concrete....03740-1 to 03740-8

Division 04 - Masonry (Not Used)

Division 05 - Metals

05120 Structural Steel ..... 05120-1 to 05120-8
05500 Metal Fabrications ..... 05500-1 to 05500-12
05515 Steps and Safety Equipment ..... 05515-1 to 05515-6

Division 06 - Wood and Plastic (Not Used)

Division 07 - Waterproofing

07900 Waterproofing ..... 07900-1 to 07900-4
07920 Sealants ..... 07920-1 to 07920-4

Division 08 - Doors and Windows (Not Used)

Division 09 - Finishes

09873 Cold Applied Plastic Tape Coating ..... 09873-1 to 09873-16
09910 Surface Preparation and Shop Painting and Coating ..... 09910-1 to 09910-8
09920 Field Painting and Protective Coating ..... 09920-1 to 09920-8
09930 Petrolatum Tape and Petroleum Wax Tape Coatings ..... 09930-1 to 09930-6

Division 10 - Specialties (Not Used)

Division 11 - Equipment

11262 Butterfly Valves ..... 11262-1 to 11262-12
11264 Plug Valves ..... 11264-1 to 11264-4

Division 12 - Furnishings (Not Used)

Division 13 - Special Construction

13510 Pipe Detection System ..... 13510-1 to 13510-4
13520 Temporary Traffic Control ..... 13520-1 to 13520-8

Division 14 - Conveying Systems (Not Used)

Division 15 - Mechanical (Not Used)

Division 16 - Electrical (Not Used)

APPENDICES

Appendix A - Calleguas Municipal Water District Standard Drawings

Appendix B - Forms

I. Pre-Bid Request Form for Information or Clarification (RFI/RFC Form)
II. Contractor's Certification of Completion
III. Daily Work Report for Extra or Disputed Work
IV. Statement of Exceptions Punch List
V. Release on Contract - Conditional Waiver and Release Upon Final Payment
VI. Escrow Agreement for Security Deposits in Lieu of Retention
VII. Contract Clarification/Interpretation Request (RFI)

Appendix C - Permits

I. County of Ventura Transportation Department Encroachment Permit
II. State Water Resources Control Board (SWRCB) Notice of Intent (NOI) and Acknowledgement of Receipt
III. Ventura County Watershed Protection District Encroachment Permit
IV. Department of Industrial Relations Tunnel Underground Classification
V. General Permit for Discharges of Low Threat Hydrostatic Test Water to Surface Water

Appendix D - Post Construction BMPs

Appendix E - Ventura County APCD Rule 55, Fugitive Dust

Appendix F - Labor Compliance Program

CALLEGUAS MUNICIPAL WATER DISTRICT
THOUSAND OAKS, CALIFORNIA

NOTICE INVITING BIDS

For the construction of the Salinity Management Pipeline, Phase 2A located within the unincorporated County of Ventura, California.

Unless otherwise defined herein, capitalized terms used in this Notice Inviting Bids shall have the same meaning given to them in the "General Conditions" adopted by Calleguas. Each Bidder must submit all of the items described in Section I-1 of the Instructions to Bidders provided by Calleguas (the "Instructions to Bidders") and all of those items shall collectively constitute the "Bid."

N-1. Bid Opening

Calleguas Municipal Water District (Calleguas) hereby invites sealed Bids for constructing the Salinity Management Pipeline, Phase 2A in accordance with Calleguas' Contract Documents including its Specifications No. 470. Bids shall be submitted in accordance with the requirements set out in the Instructions to Bidders. Bids shall be submitted to Calleguas at its main office, at 2100 Olsen Road, Thousand Oaks, California 91360-6800 at or before _____, _____, 2011, at which time they will be publicly opened and read. Bids received by Calleguas after the time specified will be returned unopened pursuant to California Government Code Section 53068.

N-2. Description of Work

The Work involves furnishing all plant, labor, materials, equipment, and incidentals to perform all operations in connection with the complete installation of the Salinity Management Pipeline, Phase 2A, in strict accordance with the Contract Documents and subject to the terms and conditions of the Contract. Work shall also comply with the requirements of governmental agencies having jurisdiction.

The Work includes installation of approximately 12,200 linear feet of 30-inch mortar lined and tape wrapped and mortar coated welded steel or HDPE pipe, 441 total linear feet of 42-inch diameter steel casings by trenchless installation methods, in and along Old Lewis Road and New Lewis Road and all other works required for the completion of the project including potholing, trenching, dewatering, shoring, earthwork, pipe installation and jointing, paving, concrete, appurtenant piping, testing, and traffic control.

N-3. Mandatory Pre-Bid Meeting

A mandatory pre-bid meeting (the "Mandatory Pre-Bid Meeting") will be held at the District's office on _____, 2011 at _____ . At the Mandatory Pre-Bid Meeting, Bidders will have the opportunity to visit the work site and ask questions regarding the performance of the Work under the Contract. In order for a Bid to qualify for consideration in making an award, the Bidder shall have a responsible representative present for the entire duration of the Mandatory Pre-Bid Meeting and site visit. Bids received from Bidders not represented at the Mandatory Pre-Bid Meeting and site visit will be returned to the Bidder unopened.

N-4. Contract Documents

Complete sets of the Contract Documents, including the Drawings and Specifications, are available for review at Calleguas' office at 2100 Olsen Road, Thousand Oaks, California 91360-6800, (805) 526-9323. Contract Documents can be purchased at Calleguas' office. Checks must be made out to "Calleguas Municipal Water District". The cost of Contract Documents and their shipping is as shown in the table below.

Item#	Price	Shipping Cost**
Full-Size Drawings (24"x36")*	$80.00	$20.00
Reduced Drawings (11"x17")*	$25.00	$15.00
Specifications (hardcopy)*	$65.00	$15.00
Drawings & Specifications on CD (pdf)	$15.00	$10.00

*A set of drawings and specifications in pdf format on CD will be provided with these items at no extra cost.
**Contract Documents may also be shipped via Federal Express utilizing the purchaser's Federal Express account number for shipping cost.

The Bidder must purchase at least one version of the Drawings and one of the Specifications.

Contract Documents are also available, for review only, in the office of Perliter & Ingalsbe, 2369 Lincoln Avenue, Altadena, California 91001, (626) 398-9111.

During the bid period, a current plan holders list and information regarding plan purchase will be available on the internet at www.calleguas.com/planholders.htm.

N-5. Bid Security

Each Bid must be accompanied by cash, a certified or cashier's check or by a Bidder's bond as described in the Instructions to Bidders (the "Bidder's Security") as a guaranty that the Bidder shall, if awarded the Contract, promptly secure workers' compensation insurance, execute a Contract in the form provided by Calleguas, submit references demonstrating the required qualifications for the Bidder's Project Manager and Superintendent, secure the required insurance and furnish satisfactory bonds for the

faithful performance of the Contract and for the payment of claims of materials suppliers and laborers. The Bidder's Security shall be in an amount that is at least ten percent (10%) of the aggregate amount of the Bidder's Bid.

N-6. Performance Bond, Payment Bond and Warranty

The Bidder that is awarded the Contract (the "Successful Bidder") shall be required to obtain the insurance required by the Contract Documents and to furnish a faithful performance bond and a payment bond which shall each be at least one-hundred percent (100%) of the total amounts payable by the terms of the Contract. The faithful performance bond shall provide that it shall remain in full force and effect during the life of any guarantee or warranty required under the Contract.

N-7. Prevailing Wages

The Successful Bidder and its agents, employees and subcontractors shall comply with the provisions of the California Labor Code, including those relating to the payment of prevailing wage rates. A schedule of prevailing wage rates is available for review at Calleguas' office or may be found on the internet at http://www.dir.ca.gov/dlse/dlsePublicWorks.html. The Successful Bidder shall be required to pay at least the wage rates set forth in that schedule. The Successful Bidder shall be required to pay the higher of the wage rates set forth in that schedule and the schedule of Federal Prevailing Wages as set forth in Section N-14.

N-8. Bidder's Licenses and Experience

The Bidder shall be licensed by the California State License Board as a Class A General Engineering Contractor in accordance with the provisions of Chapter 9, Division 3, of the Business and Professions Code of the State of California and this Notice Inviting Bids. Unless an exception applies pursuant to Business & Professions Code section 7028.15(a), a bid by a contractor who is not licensed in accordance with the foregoing provisions shall be considered nonresponsive and shall be rejected by Calleguas.

In order for a bid to be considered, the Bidder shall have completed construction of at least the number of projects listed in all of the categories shown in the table below.

In order for a Contract to be awarded, the Bidder's Superintendent and Project Manager shall have completed construction of at least the number of projects listed in all of the categories shown in the table below. The Successful Bidder's Superintendent must have served as Superintendent or Foreman on each project from project start through project completion. The Successful Bidder's Project Manager must have served as Project Manager on each project from project start through project completion.

Only projects completed in the past ten (10) years may be used to qualify for the experience requirements in the table below.

General experience required by all Bidders regardless of the type of pipe for which the Bidder will place a bid			
Category	**Bidder**	**Superintendent**	**Project Manager**
(1) General Pipeline - Construction of buried pipelines having a diameter of twenty-four (24) inches or greater and extending for a length of at least 3,000 linear feet per project	5 projects[(a)]	3 projects[(a)]	2 projects[(a)]
(2) Construction of pipeline projects involving traffic control of a complexity comparable to or greater in magnitude and complexity than this project	3 projects	2 projects	1 project
(3) Tunneling			
a. Shall have constructed projects involving installation of pipe at least 24 inches in diameter inside tunnel casings b. Tunneling – Shall have constructed projects involving the trenchless installation of pipe casings using one the same methods specified herein and to be used as part of the Work and at least 30 inches in diameter and 15 feet in depth. Combined total length shall be at least 500 feet, with one project being at least 250 feet in length.	2 projects[(a)]	1 project[(a)]	1 project[(a)]

(a) The same project may qualify as experience for both General Pipeline experience and either Welded Steel Pipeline or HDPE Pipeline experience.

(b) If the Bidder is to use a subcontractor to perform the work, these requirements apply to the subcontractor.

Additional experience required by the Bidders if the Bidder will place a Bid using welded steel pipe (Schedules "A" and "C").			
Category	**Bidder**	**Superintendent**	**Project Manager**
(1) Welded Steel Pipeline – construction of buried mortar lined and coated welded steel pipe having a diameter of 24 inches or greater. The Bidder shall have constructed projects having a diameter 24 inches or greater with a combined total length of at least 2,000 linear feet. At least one project (for Bidder, Superintendant, and Project Manager) must have a length of at least 1,000 feet.	2 projects[(a)]	1 projects[(a)]	1 projects[(a)]

(a) The same project may qualify as experience for both General Pipeline experience and Welded Steel Pipeline experience.

Additional experience required by the Bidders if the Bidder will place a Bid using HDPE pipe (Schedules "B" and "C").			
Category	**Bidder**	**Superintendent**	**Project Manager**
(1) HDPE Pipeline – construction of buried HDPE having a diameter of 24 inches or greater. The Bidder shall have constructed projects having a diameter 24 inches or greater with a combined total length of at least 2,000 linear feet. At least one project (for Bidder, Superintendant, and Project Manager) must have a length of at least 1,000 feet.	2 projects[(a)]	1 projects[(a)]	1 projects[(a)]

(a) The same project may qualify as experience for both General Pipeline experience HDPE Pipeline experience.

Calleguas shall evaluate the Bidder's work experience and shall determine, in its sole discretion, whether such experience satisfies this requirement.

N-9. <u>HDPE Pipe Fabricators' and Manufacturers' Experience and Qualifications</u>

Fabricators and manufacturers of HDPE pipe materials and equipment which will be supplied are required to have successfully and regularly provided similar products of comparable magnitude that have been in satisfactory service for five (5) years or more.

In order for a Bid to be considered, the Bidder must demonstrate that the manufacturer that will be fabricating the 32-inch diameter HDPE pipeline, fittings, and

appurtenances (HDPE Pipe Manufacturer) meets the following minimum requirements (note that the Bidder must demonstrate that the HDPE Pipe Manufacturer meets these requirements regardless of whether the Bidder submits a bid for HDPE or welded steel pipe, since HDPE pipe and fittings will be used in either case):

- The HDPE Pipe Manufacturer shall have not less than 5 years of experience in the regular manufacturing and/or fabricating of HDPE pipe meeting requirements similar to those required by Section 02623 of these Specifications.

- The HDPE Pipe Manufacturer shall have manufactured at least 10,000 linear feet of HDPE pipe 30 inches or larger meeting requirements similar to those required by Section 02623 of these Specifications within the last five (5) years.

- All aspects of the pipe fabrication process must be performed in the United States or Canada.

In order for a Bid to be considered, the Bidder must demonstrate that the fitting and appurtenance fabricator that will be fabricating the 32-inch diameter HDPE pipeline fittings and appurtenances (HDPE Pipe Fabricator) meets the following minimum requirements:

- The HDPE Pipe Fabricator shall have completed 5 projects within the last five (5) years fabricating solid wall, pressure rated HDPE fittings 30 inches and larger meeting requirements similar to those required by Section 02623 of these Specifications.

- All aspects of the pipe fabrication process must be performed in the United States or Canada.

N-10. Welded Steel Pipe Fabricators' and Manufacturers' Experience and Qualifications

Fabricators and manufacturers of welded steel pipe materials and equipment which will be supplied are required to have successfully and regularly provided similar products of comparable magnitude that have been in satisfactory service for five (5) years or more.

In order for a Bid to be considered, the Bidder must demonstrate that the manufacturer that will be manufacturing the 30-inch diameter welded steel pipeline (Welded Steel Pipe Manufacturer) meets the following minimum requirements:

- The Welded Steel Pipe Manufacturer shall have not less than 5 years of experience in the regular manufacturing of mortar lined and coated welded steel pipe meeting requirements similar to those required by Section 02620 of these Specifications.

- The Welded Steel Pipe Manufacturer shall have manufactured at least 9,000 linear feet of pressure rated mortar lined and coated welded steel pipe 30 inches or larger

cumulatively over two or more projects and meeting requirements similar to those required by of Section 02620 of these Specifications within the last five (5) years.

- All aspects of the pipe fabrication process must be performed in the United States or Canada.

In order for a Bid to be considered, the Bidder must demonstrate that the fitting and appurtenance fabricator that will be fabricating the 30-inch diameter mortar lined and coated welded steel pipeline fittings and appurtenances (Welded Steel Pipe Fabricator) meets the following minimum requirements:

- The Welded Steel Pipe Fabricator shall have completed 5 projects within the last five (5) years fabricating pressure rated mortar lined and coated welded steel pipe and fittings 30 inches and larger meeting requirements similar to those required by Section 02620 of these Specifications.

- All aspects of the pipe fabrication process must be performed in the United States or Canada.

N-11. Fabricators' and Manufacturers' Experience

Fabricators and manufacturers of materials and equipment to be supplied are required to have successfully and regularly provided similar products of comparable size and type that have been in satisfactory service for at least five (5) years. If required by the Specifications, manufacturers of equipment to be supplied shall have a local service representative and sufficient local inventories of spare parts.

N-12. Project Information/Requests for Information or Clarification (RFI/RFC)

Requests for information or clarification of details on the drawings or provisions of the Specifications shall be made on the RFI/RFC form included in an appendix to the Contract Documents and shall be submitted by fax to the Engineer at least seven (7) Calendar Days in advance of the Bid Opening date as follows:

Perliter & Ingalsbe
Contact Name: Rean David Kunitake
2369 Lincoln Avenue
Altadena, CA 91001
FAX Number: (626) 398-9115

If a response is made which modifies the Contract Documents, it will be made in writing for the benefit of all prospective Bidders and without identification of the source of the inquiry.

Requests for Interpretation/Clarification by the Successful Bidder after the Contract has been awarded shall be made in accordance with the General Conditions.

N-13. Substitution of Securities

As provided in California Public Contract Code Section 22300, the Successful Bidder shall be permitted to substitute securities for money that would otherwise be withheld by Calleguas under the Contract.

N-14. Hostile or Harassing Behavior

If any representative of a Bidder, potential Subcontractor, or potential Supplier engages in hostile or harassing behavior at any time during the bid period, that Bidder, Subcontractor or Supplier will be disqualified and declared ineligible to bid the project. If this occurs at the Mandatory Pre-Bid Meeting or the site visit, the representative will be asked to leave. A Bid subsequently received from a disqualified Bidder will be returned to the Bidder unopened and a Bid containing a disqualified Subcontractor or Supplier will be deemed non-responsive.

N-15. Calleguas' Rights

Calleguas reserves the right to reject any and all Bids, waive minor informalities or irregularities not affecting substantial rights, reject one part of a Bid and accept the other, and delay award of the Contract for a period of up to thirty (30) Calendar Days after the bid opening date.

N-16. Federally Assisted Construction

Bidders are advised that Federal funds will be used for construction, which carries certain federal contract requirements found within the Instructions to Bidders and the Federal General Conditions. The Bidders' attention is specifically directed to the Requirements for Affirmative Action to Ensure Equal Opportunity (Executive Order 11246) and to the Federal Prevailing Wage Requirements. Current federal prevailing rates of wages may be found at http://www.gpo.gov/davisbacon/ca.html.

N-17. Labor Compliance Program

This project is subject to a Labor Compliance Program. Contractors are expected to comply with all applicable prevailing wage and labor requirements. Compliance will be monitored and strictly enforced.

Dated: [date of bid resolution] CALLEGUAS MUNICIPAL WATER DISTRICT

By /s/ Susan B. Mulligan
General Manager

INSTRUCTIONS TO BIDDERS

I-1. Form of Bid.

Each Bidder shall submit the following forms provided by Calleguas Municipal Water District ("Calleguas"), with all required information filled in:

Document Title

1. Bid Proposal
2. Bid Schedule(s)
3. Bidder's Bond (not necessary if cash, certified check or cashier's check is provided in lieu of Bidder's Bond)
4. Information Required of the Bidder (includes Subcontractor List)
5. Noncollusion Affidavit

Each Bidder shall also submit the following:

6. Documentary evidence satisfactory to Calleguas that demonstrates the authority of each person executing the Bid

The following forms shall also be completed and submitted with the bid to comply with Federal requirements on federally assisted construction projects:

7. Certification of Bidder Regarding Equal Employment Opportunity
8. Certification by Proposed Subcontractor Regarding Equal Employment Opportunity (to be signed by each listed nonexempt subcontractor; faxed copy(s) of completed and signed certification from subcontractors are acceptable, and must be included with the sealed Bid)
9. Certification regarding Debarment, Suspension and Other Responsibility matters; Drug-free Workplace Requirements and Lobbying (to be signed by Contractor and each listed nonexempt Subcontractor; faxed copy(s) of completed and signed certification from subcontractors are acceptable, and must be included with the sealed Bid)

Items 1 through 9, when completed and submitted to Calleguas, shall collectively constitute the Bid (the "Bid"). All items included in the Bid, including the Bidder's Bond (or cash or certified check or cashier's check), shall be enclosed in the same sealed envelope. The Bidder's signature on the Bid shall constitute the Bidder's certification that the Bidder has read and understands and agrees to these Instructions.

Unless otherwise defined in these Instructions, all capitalized terms used in these Instructions shall have the meaning given to them in the General Conditions adopted by Calleguas (the "General Conditions").

I-2. Address and Marking of Bid.

The Bid shall be enclosed in a sealed envelope addressed to the General Manager, Calleguas Municipal Water District, 2100 Olsen Road, Thousand Oaks, California 91360-6800. The envelope shall be plainly marked in the upper left-hand corner with the name and address of the Bidder and bear the words "Bid for," followed by the number and title of the specification for the work and the date and hour of opening bids.

Unless the date and/or time is modified by Calleguas in an Addendum to the Notice Inviting Bids, a Bid will not be accepted after the date and time designated in the Notice Inviting Bids or at any location other than the location stated in the Notice Inviting Bids. It is the sole responsibility of the Bidder to see that the Bid is delivered and received at the correct location and on time. Any Bid received at any other place or after the designated date and time shall be returned to the Bidder unopened.

I-3. Execution of Bid.

The same person(s) shall sign all Bid forms that require a signature, as follows:

By Individual. If the Bidder is an individual, the Bid shall be signed by the individual.

By Partnership. If the Bidder is a partnership, the Bid shall be signed by a duly authorized general partner of the partnership. The Bidder shall also provide with the Bid a resolution or other documentary evidence satisfactory to Calleguas that demonstrates the authority of each person executing the Bid.

By Corporation. If the Bidder is a corporation, the Bid shall be signed by two duly authorized officers. The officers signing the Bid must include the Chairman of the Board, President or any Vice President and the Secretary, Assistant Secretary, Chief Financial Officer or Assistant Treasurer. The Bidder shall also provide with the Bid a resolution or other documentary evidence satisfactory to Calleguas that demonstrates the authority of each person executing the Bid.

By Joint Venture. If the Bidder is a joint venture, the Bid shall be signed on behalf of the joint venture by each participant in the joint venture ("Joint Venture Participant") and shall include a complete copy of the agreement establishing the joint venture. The person signing on behalf of a Joint Venture Participant shall be a person duly authorized to bind the Joint Venture Participant. The Bidder shall also provide with the Bid a resolution or other documentary evidence satisfactory to Calleguas that demonstrates the authority of each person executing the Bid.

By Limited Liability Company. If the Bidder is a limited liability company ("LLC"), the Bid shall be signed by the duly authorized manager(s) of the LLC, or if there is no manager by the duly authorized member(s). The Bidder shall also provide with the Bid a resolution or other

documentary evidence satisfactory to Calleguas that demonstrates the authority of each person executing the Bid.

A partnership, corporation, joint venture, or limited liability company to which an award is made may be required, before the Contract is formally executed, to furnish evidence of its legal existence, or its right to do business in California. Each Bidder may also be required, before the Contract is formally executed, to furnish a resolution or other documentary evidence satisfactory to Calleguas that demonstrates the authority of the Bidder to submit the Bid and the authority of each person executing the Contract, bonds and all other documents and instruments related to the Contract.

I-4. Local Conditions.

1. Bidder's Due Diligence. Bidders shall read the Specifications, examine the Drawings, and make their own estimates of the existing facilities and the difficulties that will attend the execution of the Work called for by the Contract, including local conditions, uncertainty of weather, and all other contingencies. Bidders shall satisfy themselves by personal examination of the location of the proposed Work, and by such other means as they may choose, as to actual conditions and requirements. Information derived from the maps, plans, Specifications, profiles, or Drawings, or from the Engineer or any personnel, employees, agents, or representatives of Calleguas shall not relieve the Bidder of this responsibility. Calleguas assumes no responsibility for conclusions or interpretations made by the Bidder based on the information that Calleguas makes available. Calleguas assumes no responsibility for, and the Bidder may not rely upon, any understanding reached or representation made concerning conditions that can affect the Work by any personnel, employees, agents or representatives of Calleguas before execution of the Contract, unless that understanding or representation is expressly stated in the Contract Documents.

2. Further Acknowledgements and Obligations of Bidder. By submitting a Bid, the Bidder acknowledges that it has ascertained the nature and location of the Work, and that it has investigated and assured itself as to the general and local conditions that can affect the Work and the cost of the Work. By submitting the Bid, the Bidder also acknowledges that it is satisfied as to the character, quality, and quantity of surface and subsurface materials or obstacles to be encountered so far as this information can be reasonably ascertained from an inspection of the site, review of any exploratory work done by or on behalf of Calleguas, as well as from the Bidder's review of the Drawings and Specifications. Failure of the Bidder to take these actions will not relieve it from responsibility for estimating properly the difficulty and cost of successfully completing the Work, and for proceeding to successfully complete the Work without additional cost to Calleguas.

   By submitting the Bid, the Bidder acknowledges that the Drawings for the Work show conditions as they are supposed or believed by the Engineer to exist,

but it is not intended or to be inferred that the conditions as shown thereon constitute a representation by Calleguas or the Engineer that such conditions actually exist. The Bidder must take into account in conducting its investigation and making its Bid that, except as expressly set forth in the General Conditions, the Bidder shall not be relieved of liability under the Contract and will bear the risk of any loss as a result of any variance between conditions as shown on the Drawings and the actual conditions revealed during site inspections, the progress of the Work, or otherwise. Calleguas does not assume any responsibility whatsoever with respect to the sufficiency or accuracy of any test borings, soils reports, or any other reports, logs, investigations or inspections relating to subsurface materials or of the interpretation of those items. Calleguas does not expressly or impliedly warrant or guarantee that the conditions indicated by any such investigations, borings, logs, soils reports or other information are representative of those existing throughout the Site or any part thereof or that unforeseen developments may not occur. In no event shall Calleguas be liable, nor shall the Bidder be entitled to, any time extension or additional compensation, should the conditions encountered differ in any respect from that depicted in the documents provided to the Bidder, except as mandated by Public Contract Code Section 7104 or expressly provided in the Contract Documents.

I-5. Quantities.

The quantities of work or material stated in the unit-price items of the Bid Schedule are supplied only to give an indication of the general scope of the Work and for Bid comparison purposes. The actual amount of work or material may be different. Calleguas reserves the right to increase the amount of any unit-price item of the Work by an amount up to and including twenty-five percent (25%) of any Bid item(s) or to omit some or all of such work as may be deemed necessary or expedient by the Engineer without a change in the unit price.

I-6. Licenses.

At the time the Contract is awarded, the Successful Bidder (as defined in Section I-9 of these Instructions) shall possess a valid license or licenses issued by the California State License Board, in the classification or classifications specified in the Notice Inviting Bids. If a Bidder is a joint venture, each participant in the joint venture shall possess the required license(s). If the Successful Bidder is a joint venture, the Successful Bidder shall obtain a joint venture license as required by the California Business and Professions Code within fifteen (15) Calendar Days from the date that Calleguas mails the Notice of Award. Failure of the Successful Bidder to obtain proper and adequate licensing for award of the Contract shall constitute a failure to execute the Contract and shall result in the forfeiture of the Bidder's Security.

I-7. Preparation of the Bid.

1. General Rules.

a. All blank spaces in the Bid documents must be properly completed.

b. The Bid must be typewritten or printed legibly in ink, and must be executed as required under Section I-3 of these Instructions, and addressed, marked and mailed as required under Section I-2 of these Instructions.

c. No change, addition, deletion, or modification may be made by the Bidder to any of the Bid documents. Calleguas reserves the right, in its sole discretion, to reject any Bid that it deems to be conditional, incomplete, illegible, irregular, ambiguous, and/or where any alteration or modification made to any Bid document is deemed by Calleguas to constitute a material change to such document.

d. No "white out," liquid paper, erasures, or deletions may appear in any Bid document, except that Calleguas may, in its sole discretion, consider a legible handwritten notation if initialed by the Bidder.

e. Calleguas shall not consider any alternative or additional Bid(s) submitted by a Bidder, unless specifically requested by Calleguas.

f. Calleguas shall not consider any oral, telegraphic, or telephonic proposals or modifications to a Bid.

g. All Bids must be accompanied by the appropriate form of Bid Security as described in subsection 4 of this Section I-7.

h. All Bids must be received by the date and time designated in the Notice Inviting Bids, at the address specified in Section I-2 of these Instructions.

2. Requests for Information or Clarification (RFI/RFC). Requests for Information/ Clarification shall be made to the person(s) and in accordance with the procedures designated in the Notice Inviting Bids.

3. Bid Schedule(s). The Bidder shall state in the Bid Schedule the unit or lump sum prices for the supply of all labor, equipment, materials, and incidentals necessary for the Bidder to complete each and every item of the Work required to be completed under the Contract Documents in the manner and within the time required under the Contract. If a unit price expressed in numbers differs from a unit price expressed in words, the unit price expressed in words shall be deemed to represent the Bidder's intent and will be multiplied by the estimated quantity. All totals will be corrected to conform thereto and those corrected totals shall be used to calculate the total Bid. If a unit price and the total amount named by a Bidder for any item are not in agreement, the unit price times the estimated quantity will be deemed to represent the Bidder's intent and the totals will be corrected and those corrected totals shall be used to calculate the total Bid. Similarly, if a discrepancy exists between item totals and schedule totals, the item

totals will be deemed to represent the Bidder's intent and the schedule totals will be corrected accordingly.

The prices quoted by the Bidder shall include all applicable taxes and duties. The Bidder shall pay all applicable taxes and duties. In accordance with 26 U.S.C. Section 4221, prices quoted by the Bidder shall not include federal excise taxes as Calleguas is exempt as a political subdivision of the State under Federal law.

4. Bid Security. Each Bidder shall submit with the Bid, at no cost to Calleguas, one of the following forms of bidder's security (the "Bid Security") in an amount of at least ten percent (10%) of the aggregate amount of the Bid, as a guarantee that the Bidder shall, if awarded the Contract, promptly execute a Contract in the required form, secure the payment of workers' compensation, furnish satisfactory bonds and insurance, and provide evidence that the Bidder's Superintendent, Project Manager, and all other designated employees meet the experience requirements, as described in these Instructions:

a. Cash;

b. A Cashier's check or certified check payable to "Calleguas Municipal Water District" and drawn on a solvent state or national bank; or

c. A Bidder's Bond payable to "Calleguas Municipal Water District" and that complies in all respects with the requirements of Section I-11.3 of these Instructions. The Bidder shall specify the surety furnishing the Bidder's Bond as required under Section I-11.4 of these Instructions.

The Bid Security of the Successful Bidder will be returned to that Bidder after all of the acts for which the Bid Security is required have been fully performed. Except for any Bid Security that is forfeited as provided in these Instructions, the Bid Security of the unsuccessful Bidders shall be returned to the Bidder in a reasonable time but no more than sixty (60) Calendar Days from the date the Contract is awarded. The liability of Calleguas in connection with the Bid Security shall be limited to the return of the Bid Security.

If the Successful Bidder fails or refuses to execute the Contract, secure the payment of workers' compensation (if required), furnish the required bonds and insurance, and provide satisfactory evidence that the Successful Bidder's Superintendent, Project Manager, and all other designated employees as required under the Notice Inviting Bids meet the experience requirements, all within the required time, the moneys represented by the Bid Security shall become and remain the property of Calleguas. By submitting its Bid Security, the Bidder acknowledges and agrees that it would be impractical or extremely difficult to establish the damages Calleguas would sustain as a result of the

Bidder's failure or refusal to comply with these requirements of the Successful Bidder. Accordingly, the Bidder hereby consents and agrees with Calleguas that in the event of such a default by the Bidder, it would be reasonable at such time to award Calleguas liquidated damages equal to the amount represented by the Bid Security.

5. Information Required of Bidders.

a. Names and Addresses.

Name and address information for the Bidder shall be provided in the Bid, as follows:

By Individual. If the Bidder is an individual, the Bid shall include his or her full name and street address.

By Partnership. If the Bidder is a partnership, the Bid shall include the name and street address of the partnership and the name and the street address of each general partner of the partnership.

By Corporation. If the Bidder is a corporation, the Bid shall include the name of the corporation and its street address.

By Joint Venture. If the Bidder is a joint venture, the Bid shall include the name and street address of the joint venture and the name and street address of each Joint Venture Participant.

By Limited Liability Company. If the Bidder is an LLC, the Bid shall include the name and street address of the LLC and the name and the street address of each Manager and Member of the LLC.

b. Performance of Comparable Work. In the form entitled "Information Required of Bidders", Bidders are required to present information evidencing successful performance of similar work of comparable or greater magnitude.

c. Subcontractors List. Pursuant to sections 4100-4114 of the California Public Contract Code, Bidders are required to enter the information requested on the Subcontractors List for each subcontractor who will perform work or labor or render service to the Bidder in or about the construction of the work and for each subcontractor licensed by the State of California who, under subcontract to the Bidder, will specially fabricate and install a portion of the work according to the details contained in the Drawings and Specifications, in an amount in excess of one-half of one percent (0.5%) of the Bidder's total Bid.

(1) Ineligible subcontractors. Bidders may not list, solicit bids from, or award work to a subcontractor who is ineligible to perform work on a

public works project pursuant to California Labor Code sections 1777.1 or 1777.7.

6. Noncollusion Affidavit. Bidders are required to execute the Noncollusion Affidavit in the form attached.

I-8. Withdrawal or Modification of Bid.

A Bidder may withdraw its Bid before the hour fixed for opening Bids, without prejudice, by submitting a written request to Calleguas executed by the Bidder as required under Section I-3 of these Instructions. Such withdrawn Bid will be returned unopened upon receipt of the proper request for withdrawal. The withdrawal of a Bid before the hour fixed for opening Bids does not prejudice the right of a Bidder to submit a timely new Bid. Any Bid withdrawn after the hour fixed for opening bids shall subject the Bidder to forfeiture of the Bidder's Security as liquidated damages as if the Bidder failed to comply with any of the requirements described in subsection 4 of Section I-7.

I-9. Award of Contract - Selection of Lowest Responsible Bidder.

The Contract shall be awarded to the lowest responsible Bidder submitting a responsive Bid, contingent on the Bidder's submittal of an executed Contract in the required form, satisfactory bonds and insurance and associated documentation, and evidence that the Bidder's designated employees meet the experience requirements (the "Successful Bidder"). In selecting the Successful Bidder, consideration will be given not only to the price bid, but also to the general competency of the Bidder for the performance of the Work. In addition to the information contained in the Bid documents, Bidders may be required to submit other evidence satisfactory to Calleguas that the Bidder is competent to manage the proposed undertaking and to carry it forward to a successful conclusion. Professional integrity and honesty of purpose shall be essential requirements. Calleguas may require the Bidder to provide evidence that it has adequate financial resources to complete the Work, although proof of adequate finances will not alone determine that the Bidder is competent to undertake the Work. Calleguas shall have absolute discretion as to the evaluation of the past work performance of any Bidder, and Calleguas' decision in regards thereto shall be deemed correct and shall be conclusive and binding. Wherever applicable, equalizing elements or factors such as interest during construction, costs of transportation, inspection (including salaries and travel and subsistence expenses), installation, and operation, or any other relevant factor(s) may be taken into consideration by Calleguas in comparing Bids for award of the Contract.

All Bids will be opened and declared publicly. Bidders, their representatives and other interested parties, are invited to be present at the opening.

Calleguas reserves the right to reject any and all Bids, waive minor informalities or irregularities not affecting substantial rights, reject one part of a Bid and accept the other, and delay award of the Contract for the number of days set forth in the Notice Inviting Bids.

The Contract shall not be awarded to a Bidder who is listed by the California Labor Commissioner as ineligible to bid, work on, or be awarded a public works project.

I-10. Execution of Contract and Other Requirements of the Lowest Responsible Bidder.

Notice of Award of the Contract shall be mailed to the address provided by the Successful Bidder on the Information Required of Bidders form. Within fifteen (15) Calendar Days from the date of mailing the Notice of Award, Contractor shall:

1. Return to Calleguas the Contract duly executed by the Successful Bidder in accordance with the requirements of Section I-3 of these Instructions.

2. Provide evidence satisfactory to Calleguas that the Successful Bidder has secured the appropriate workers' compensation insurance pursuant to Labor Code § 1761 as more fully described in Section I-12 of these Instructions.

3. Furnish the Faithful Performance Bond, Payment Bond and required surety information described in Section I-11 of these Instructions.

4. Acquire all other insurance described in these Instructions, and provide Calleguas with satisfactory evidence of such coverage including a certificate or certificates of insurance (ACORD Form 25-S or equivalent) with the required additional policy endorsements signed by the insurer's representative, or such other evidence as may be requested by Calleguas. Such certificates and endorsements shall be submitted for both the Successful Bidder and the subcontractor(s) performing the trenchless work.

5. If the Successful Bidder is a joint venture, provide evidence that the joint venture has a valid joint venture license as required under the California Contractors' State License Law.

6. Submit references demonstrating the qualifications and experience of the Successful Bidder's Project Manager and Superintendent as required in the Notice Inviting Bids. Each set of references must include a description of the projects worked on by the candidate(s) as to size and type, and include the employer's name, the project name, the owner's name, the position held by the candidate(s), the contract amount, the dates employed on the project and a contact person and phone number for both the employer and the project owner.

7. Submit copies of certifications and/or references demonstrating the qualifications of any other individuals to be employed by the Successful Bidder or its subcontractors or suppliers as required in the Notice Inviting Bids.

8. If builders risk insurance is required in the Special Conditions, provide a copy of the policy.

The following forms shall also be completed and submitted by the successful Bidder with the executed agreement to comply with Federal requirements on federally assisted construction projects:

9. Contractor's Certification Concerning Labor Standards and Prevailing Wage Requirements.

10. Subcontractor's Certification Concerning Labor Standards and Prevailing Wage Requirements.

All other forms included in the Special Federal Provisions of the Specifications shall be submitted as required during the course of the project.

If the Successful Bidder fails or refuses to meet all of these requirements, the Bid Security shall become the property of Calleguas, the award may be annulled, and Calleguas may either re-bid the project or make an award to the next lowest responsible Bidder who has submitted a responsive Bid. In the event that the Contract is awarded to the next lowest responsible Bidder submitting a responsive Bid, that Bidder shall fulfill every requirement contained herein as if that Bidder were the party to whom the first award was made.

Calleguas may, in its sole discretion, allow the Successful Bidder additional time to execute the Contract, secure payment of workers' compensation and secure the required bonds and insurance; provided, however, that the Successful Bidder hereby acknowledges that such additional time will be deducted from the Time for Completion of the Work under the Contract. If the Successful Bidder's Bid Security was in the form of a bond, the Successful Bidder shall submit a statement from the surety that the bond has been extended for the same period.

I-11. Bonds Required of Successful Bidder.

1. Calleguas Bonds

a. Faithful Performance Bond. The Successful Bidder shall furnish a bond conditioned upon the faithful performance of the Successful Bidder of all covenants and stipulations in the Contract. The bond shall be on the form provided by Calleguas in an amount of at least one hundred percent (100%) of the total amount payable by the terms of the Contract.

(i) Warranty Language. The faithful performance bond furnished under the Contract shall provide that it shall remain in full force and effect during the life of any guarantee or warranty required under the Contract.

b. Payment Bond. The Successful Bidder shall also furnish a labor and material payment bond on the form provided by Calleguas in an amount of at least one hundred percent (100%) of the total amount payable by the terms of the

Contract. The bond shall also comply with the provisions of Section 3248 of the California Civil Code.

2. Form of Bond and Required Surety Information. The bonds shall be issued by a surety approved by Calleguas and shall be submitted on the forms provided by Calleguas. The surety must have a current A.M. Best's rating of no less than A-: VII or equivalent unless otherwise approved by Calleguas. Each bond shall incorporate the Contract by reference and shall be signed by both the Successful Bidder and the surety, and the signature of the authorized agent of the surety shall be notarized. Bonds shall be accompanied by the documents enumerated in California Code of Civil Procedure Section 995.660 as follows: (1) The original, or a certified copy, of the unrevoked appointment, power of attorney, bylaws, or other instrument entitling or authorizing the person who executed the bond to do so; (2) a certified copy of the certificate of authority of the insurer issued by the California Insurance Commissioner; (3) a certificate from the county clerk of Ventura County that the certificate of authority of the insurer has not been surrendered, revoked, cancelled, annulled or suspended or, in the event that it has, that renewed authority has been granted; and (4) Copies of the insurer's most recent annual statement and quarterly statement filed with the Department of Insurance pursuant to Article 10 (commencing with Section 900) of Chapter 1 of part 2 of Division 1 of the Insurance Code.

3. Naming of Surety. The Bidder shall name in the Bid, in the space provided, the surety or sureties that have agreed to furnish the bonds required under these Instructions or otherwise to be provided by the Bidder.

I-12. Workers' Compensation and Employer's Liability Insurance Required of the Contractor.

a. At all times during the entire period of performance under the Contract, including throughout the warranty period(s) required under the Contract, the Contractor and all subcontractors shall maintain workers compensation and employers liability insurance covering all persons employed directly by them or through subcontractors in carrying out the Work, all in accordance with the "Workers' Compensation and Insurance Act" set forth in the California Labor Code and any amendments thereto. Workers' compensation insurance shall not be required for contracts to furnish materials and equipment only. The commercial umbrella and/or employer's liability limits shall not be less than ten million dollars ($10,000,000) each accident for bodily injury by accident or ten million ($10,000,000) each employee for bodily injury by disease.

b. Before the Contract is executed on behalf of Calleguas, the Successful Bidder shall furnish evidence satisfactory to Calleguas that such workers compensation insurance and employer's liability insurance is in place.

c. Waiver of Subrogation. Contractor waives all rights against Calleguas, the Engineer, the public and private owners of all properties where the Work will be

performed, the individuals or entities required in the Special Conditions to be named as additional insureds, and their respective directors, officers, employees, agents and/or volunteers for recovery of damages to the extent these damages are covered by the workers compensation and employers liability or commercial umbrella liability insurance obtained by Contractor pursuant to the Contract.

I-13. Liability Insurance Required of the Contractor.

The Contractor shall, at its sole cost and expense, obtain and maintain at all times during the entire period of performance under the Contract, including the warranty period, the liability insurance as outlined in this Section. Before the Contract is executed on behalf of Calleguas, and throughout the period that such insurance is required, the Contractor shall (i) file with Calleguas a certificate or certificates of insurance, with all required additional policy endorsements, signed by the insurer's representative evidencing that such insurance coverage is in effect, and (ii) provide Calleguas with such other documents and/or instruments requested by Calleguas evidencing the Contractor's compliance with this Section I-13.

1. General Liability.

a. Contractor shall obtain insurance of the types and in the amounts described below.

b. Commercial General Liability (CGL) and Umbrella Liability Insurance. Contractor shall maintain commercial general liability (CGL) with a limit of not less than Ten Million Dollars ($10,000,000) each occurrence. CGL may be supplemented with commercial umbrella insurance to attain the required limit. If such CGL insurance contains a general aggregate limit, it shall apply separately to this project by including ISO Designated Construction Project(s) General Aggregate Limit endorsement CG 25 03 or a substitute providing equivalent coverage. If such CGL insurance contains a general aggregate limit, it shall apply separately to this project by including ISO Designated Construction Project(s) General Aggregate Limit endorsement CG 25 03 or a substitute providing equivalent coverage. CGL insurance shall be written on ISO occurrence form CG 00 01 12 04 (or a substitute form providing equivalent coverage) and shall cover liability arising from premises, operations, independent contractors, products-completed operations, personal and advertising injury, and liability assumed under an insured contract, including the tort liability of another assumed in a business contract. Umbrella Liability Insurance shall provide additional insured coverage and per project status as required for the CGL Insurance.

c. The Additional Insureds are defined as Calleguas, the Engineer, the public and private owners of all properties where the Work will be performed, the individuals or entities required in the Special Conditions to be named as additional insureds, and their respective directors, officers, employees, agents and/or volunteers. The Additional Insureds shall be included as an insured

under the CGL, using ISO additional insured endorsements CG 20 10 and CG 20 37 or their equivalents. ISO endorsement CG 20 37 shall include coverage for the Additional Insureds with respect to liability arising out of the completed operations of Contractor, and which coverage shall be maintained in effect for the benefit of the Additional Insureds for a period of two (2) years following the issuance of the Statement of Acceptance by Calleguas pursuant to General Conditions Section 6.4.1. Additional insured coverage as required in this subparagraph shall apply as primary insurance with respect to any other insurance or self-insurance programs afforded to the Additional Insureds. There shall be no endorsement or modification of the CGL to make it excess over other available insurance; alternatively, if the CGL states that it is excess or pro rata, the policy shall be endorsed to be primary with respect to the additional insured. Any insurance, self-insurance, or other coverage, if any, maintained by the Additional Insureds shall be non-contributory.

d. There shall be no endorsement or modification of the CGL limiting the scope of coverage for liability assumed under a contract, or liability arising from explosion, collapse, or underground property damage.

e. Coverage under the policy shall include bodily injury and property damage arising from equipment that Calleguas has temporarily placed in the custody of Contractor.

f. Coverage shall include railroads endorsement CG 24 17 or equivalent on the CGL policy.

g. Continuing Completed Operations Liability Insurance. Contractor shall maintain CGL and, if necessary, commercial umbrella liability insurance with a limit of not less than Three Million Dollars ($3,000,000) each occurrence for a least two (2) years following the issuance of the Statement of Acceptance by Calleguas pursuant to General Conditions Section 6.4.1. Continuing CGL insurance shall be written on ISO occurrence form CG 00 01 12 04 (or a substitute form providing equivalent coverage) and shall, at a minimum, cover liability arising from products-completed operations and liability assumed under an insured contract. Continuing CGL insurance shall have a products-completed operations aggregate of at least two times its each occurrence limit. Continuing commercial umbrella coverage, if any, shall include liability coverage for damage to the insured's completed work equivalent to that provided under ISO form CG 00 01 12 04.

2. Automobile Liability.

a. Business Auto and Umbrella Liability Insurance. Contractor shall maintain business auto liability and, if necessary, commercial umbrella liability insurance with a limit of not less than Ten Million Dollars ($10,000,000) each accident.

b. Such insurance shall cover liability arising out of any auto (including owned, hired, and non-owned autos).

c. Business auto coverage shall be written on ISO form CA 00 01 or a substitute form providing equivalent liability coverage. If necessary, the policy shall be endorsed to provide contractual liability coverage equivalent to that provided in the 1990 and later editions of CA 00 01. The policy shall not possess any endorsements that in any manner whatsoever restrict coverage as it pertains to the Additional Insureds.

d. If the Work involves transportation of hazardous materials, pollution liability coverage equivalent to that provided under the ISO pollution liability-broadened coverage for covered autos, endorsement (CA 99 48) shall be provided, and the Motor Carrier Act endorsement (MCS 90) shall be attached.

e. Waiver of Subrogation. Contractor waives all rights against Calleguas, the Engineer, the public and private owners of all properties where the Work will be performed, the individuals or entities required in the Special Conditions to be named as additional insureds, and their respective directors, officers, employees, agents and/or volunteers for recovery of damages to the extent these damages are covered by the business auto liability or commercial umbrella liability insurance obtained by Contractor pursuant to Section I-13.2.a of these Instructions or under any applicable auto physical damage coverage.

3. Additional Requirements: With respect to all insurance required to be maintained by the Contractor, the Contractor shall comply, or ensure compliance, with all of the following:

a. The Contractor must provide Calleguas with a certificate or certificate(s) of insurance (ACORD Form 25 or its equivalent) and such other evidence satisfactory to Calleguas establishing that such coverage applies separately and exclusively to the Work.

b. The words "endeavor to" and "but failure to mail such notice shall impose no obligation or liability of any kind upon the company, its agents or representatives" shall be deleted from the cancellation provision of the certificate form.

c. Failure of Calleguas to demand such certificate or other evidence of full compliance with these insurance requirements or failure of Calleguas to identify a deficiency from evidence that is provided shall not be construed as a waiver of Contractor's obligation to maintain such insurance.

d. Calleguas shall have the right, but not the obligation, of prohibiting Contractor or any subcontractor from entering the project site until such certificates or other evidence that insurance has been placed in complete compliance with these requirements is received and approved by Calleguas.

e. Failure to maintain the required insurance may result in termination of the Contract at the option of Calleguas.

f. If Contractor fails to maintain the insurance as set forth herein, Calleguas shall have the right, but not the obligation, to purchase said insurance at Contractor's expense.

g. Any failure to comply with reporting or other provisions of any insurance policy, including, without limitation, breaches of warranties, shall not affect the coverage provided to the Additional Insureds.

h. The Contractor's insurance shall apply separately to each of the Additional Insureds against whom a claim is made or suit is brought, except with respect to the limits of the insurer's liability.

i. All certificates shall provide for thirty (30) Calendar Days (ten (10) Calendar Days for non-payment of premium) written notice to Calleguas prior to the cancellation (or material change) of any insurance referred to therein.

j. The Contractor shall notify Calleguas at least thirty (30) Calendar Days prior to any changes made to any of the insurance policies required hereunder, including without limitation any change in the insurance carrier or the scope of coverage.

k. All of the insurance shall be provided on policy forms satisfactory to Calleguas. All certificates of insurance, correspondence, notations, or other documents from the insurer issuing the policy or any agent/broker shall each separately reference by name the project that is the subject of the Contract and to which the policy relates.

l. Any deductible or self-insured retention must be declared to and approved by Calleguas in writing. Calleguas may, in its sole discretion, require Contractor to cause the insurer to reduce or eliminate such deductibles or self-insured retentions.

m. Insurance is to be placed with insurers having a current A.M. Best's rating of no less than A-: VII or equivalent unless otherwise approved by Calleguas.

n. Contractor shall provide certified copies of all insurance policies required above within ten (10) Calendar Days of written request by Calleguas.

o. In the event that the Contractor employs other contractors (subcontractors) as part of the services covered by the Contract, it shall be the Contractor's responsibility to require and confirm that each subcontractor meets the minimum insurance requirements specified herein or such other insurance requirements approved by Calleguas. The requirements for the railroads endorsement CG 24 17 or equivalent on the CGL policy and Railroad Protective Liability Insurance apply only to subcontractors working within 50 feet of a railroad right of way. When requested by Calleguas, the Contractor shall furnish copies of certificates of insurance evidencing coverage for each subcontractor.

p. With respect to completed operations insurance maintained in compliance with Section I-13.1.f. of these Instructions, subcontractor and/or Contractor shall promptly provide additional certificates of insurance evidencing such coverage whenever requested by Calleguas.

q. By requiring insurance herein, Calleguas does not represent that coverage and limits will necessarily be adequate to protect Contractor and such coverage and limits shall not be deemed as a limitation on Contractor's liability under the indemnities granted to Calleguas in this Contract.

r. Contractor shall notify Calleguas immediately if any aggregate insurance limit is exceeded at any point during the Contract period, including during the warranty period. In such a case, Contractor shall purchase additional insurance coverage to meet the requirements of the Contract.

I-14. Loss or Damage to the Work During the Course of Construction.

The Contractor's attention is directed to the fact that the Contractor shall be responsible for the delivery to Calleguas of the completed Work in accordance with the Contract, except as provided in Section 7105 of the Public Contract Code. Should the Work be damaged by fire or other causes before acceptance of the completed Work by Calleguas, it shall be replaced by the Contractor, in accordance with the Specifications without additional expense to Calleguas. Calleguas does not carry "Course of Construction" or "Builders Risk" insurance. The Contractor should arrange its own insurance to protect its interests.

If the Contractor is required to purchase and maintain builders risk insurance for the Work, the requirements for such insurance are set forth in the Special Conditions.

NOTICE OF REQUIREMENT FOR AFFIRMATIVE ACTION TO ENSURE EQUAL EMPLOYMENT OPPORTUNITY (Executive Order 11246)

1. The Bidder's attention is directed to the "Equal Opportunity Clause" and the "Standard Federal Equal Employment Opportunity Construction Contract Specifications" set forth in the Specifications.

2. The goals and timetables for minority and female participation, expressed in percentage terms for the Contractor's aggregate workforce in each trade on all construction work in the covered area, are indicated below.

These goals are applicable to all the Contractor's construction work (whether or not it is Federal or federally assisted) performed in the covered area.

The Contractor's compliance with the Executive Order and the regulations in 41 CFR Part 60-4 shall be based on its implementation of the Equal Opportunity Clause, specific affirmative action obligations required by the specifications set forth in 41 CFR 60-4.3(a), and its efforts to meet the goals established for the geographical area where the contract resulting from this solicitation is to be performed. The hours of minority and female employment and training must be substantially uniform throughout the length of the contract, and in each trade, and the Contractor shall make a good faith effort to employ minorities and women evenly on each of its projects. The transfer of minority or female employees or trainees from Contractor to Contractor or from project to project for the sole purpose of meeting the Contractor's goals shall be a violation of the contract, the Executive Order and the regulations in 41 CFR Part 60-4. Compliance with the goals will be measured against the total work hours performed.

3. The Contractor shall provide written notification to the Director of the Office of Federal Contract Compliance Programs within 10 working days of award of any construction subcontract in excess of $10,000 at any tier for construction work under the contract resulting from this solicitation. The notification shall list the name, address and telephone number of the subcontractor, employer identification number, estimated dollar amount of the subcontract; estimated starting and completion dates of the subcontract; and the geographic area in which the contract is to be performed.

Area Covered - Ventura County

Goals and Timetables

Time Table	Goals for minority participation in each trade (percent)	Goals for female participation in each trade (percent)
Until Further Notice	21.5	6.9

Any questions that bidders may have on complying with these Bid Conditions should be directed to the following agency:

U.S. Department of Labor (888) 376-3227
Office of Federal Contract Compliance
71 Stevenson Street, Suite 1700
San Francisco, CA 94105

_____
Bidder's Name

PROPOSAL

FOR THE CONSTRUCTION OF
SALINITY MANAGEMENT PIPELINE, PHASE 2A
SPECIFICATIONS NO. 470

PROPOSALS RECEIVED UNTIL 2:00 P.M., _____, 2011

Unless otherwise defined herein, capitalized terms used in this proposal shall have the same meaning given to them in the "General Conditions" adopted by Calleguas.

To the Board of Directors of the Calleguas Municipal Water District:

The undersigned bidder (the "Bidder") hereby declares as follows:

1. The Bidder is submitting this Bid on its own behalf and not in the interest of, on behalf of, or in collusion with any other person, partnership, corporation, association or organization.
2. No director, officer, or employee of Calleguas Municipal Water District (the "District") has any proprietary interest in the Bidder, this proposal, or in the profits to be derived from the Contract.
3. The Bid is in all respects fair and without collusion or fraud.
4. The Bidder has read the Notice Inviting Bids and the Instructions to Bidders and agrees to all of the stipulations contained therein.
5. The Bidder has examined the site of the work, and has read all of the Contract Documents approved by the District, including without limitation all of the Specifications and Drawings referenced therein, and the Bidder proposes and agrees that if the Bid as submitted in the attached Bid Schedule is accepted by the District, the Bidder shall contract in the form so approved by the District to perform and complete all of the Work under the Contract within the time and by the dates stipulated therein.
6. The Bidder shall accept, in full payment, the prices quoted by the Bidder in the Bid Schedule. Said prices shall include and cover the supply of all labor, equipment, materials, and incidentals necessary or proper for the Bidder to complete each and every item of the Work required to be completed under the Contract Documents in the manner and within the time required under the Contract Documents.
7. The address provided by the Bidder in this proposal is the address to which the District may direct any and all notices or other communications to the Bidder.

The Bidder further agrees that, upon receipt of written Notice of Award from the District of the acceptance of the Bidder's Bid, the Bidder shall, within fifteen (15) Calendar Days from the date the District mails such notice, or within such additional time as may be expressly allowed by the District in writing, (i) execute the Contract in accordance with the Bid as accepted by the District, (ii) secure the payment of the required workers' compensation insurance, (iii) furnish the required bonds and bonding company documentation, (iv) provide satisfactory evidence that the Bidder's Superintendent, Project Manager, and all other designated employees as required under the Notice Inviting Bids, meet the experience requirements in the Notice Inviting Bids, and (v) secure all other insurance coverages required under the Contract Documents. The Bidder further acknowledges and agrees that if the Bidder refuses or otherwise fails to complete all of said requirements within the required time, then the certified or cashier's check or bidder's bond accompanying this Bid, and the money payable thereon, shall be forfeited to and become the property of the Calleguas Municipal Water District as liquidated damages for such failure or refusal. If the Bidder complies with all of the above referenced requirements within the required time, then the certified or cashier's check, if furnished, shall be returned to him within three (3) Working Days thereafter, or the bidder's bond, if furnished, shall become void.

_____
Bidder's Name

BIDDER'S DECLARATION

The undersigned Bidder acknowledges receipt of the following addenda:

Addendum No.	Description	Date Received

Failure to acknowledge receipt of all Addenda will cause rejection of the Bid as non-responsive.

BIDDER'S DECLARATION

The Bidder declares that the surety or sureties named in the space provided below have agreed to furnish bonds and bonding company documentation in the form and aggregate amounts set forth in the accompanying Notice Inviting Bids and the Instructions to Bidders, in the event that the Contract is awarded to the Bidder on the basis of this proposal.

The Bidder declares that the license listed below is the Bidder's license, is current and valid, and is in a classification appropriate to the work to be undertaken.

Contractor's License No._____

License Expiration Date_____

Contractor's License No._____

(Complete if submitting bid as a joint venture)

License Expiration Date_____

(Complete if submitting bid as a joint venture)

The Bidder declares under penalty of perjury under the laws of the State of California that the foregoing is true and correct.

Dated:_____, 20__

_____

_____
(Print Full Name of Bidder)

By_____*
(Signature)

_____
(Print Name and Title of Signatory)

By:_____*
(Signature)

_____
(Print Name and Title of Signatory)

Surety or Sureties:

_____

_____

***Refer to Section I-3 for authorized signatories and requirements for documentation to be included with the Bid to demonstrate the authority of signatories and, if applicable, establishment of a joint venture.**

PROPOSAL

BIDDER'S BOND

(Not necessary when certified or cashier's check accompanies Bid)

We, the undersigned principal and surety, acknowledge ourselves jointly and severally bound to the Calleguas Municipal Water District in the amount of ten percent (10%) of the aggregate amount of the Bid to be paid to said District if the Bid of the undersigned principal for construction of the Salinity Management Pipeline, Phase 2A Project under Specifications No. 470 of said District shall be accepted and the proposed contract awarded to said Bidder, and the said Bidder shall fail to execute the contract and furnish the bonds and insurance and associated documentation, and provide satisfactory evidence that the Bidder's Superintendent and Project Manager meet the experience requirements in the Notice Inviting Bids, required in connection therewith; otherwise, this obligation to be void.

WITNESS our hands this _____ day of_____, 20__

_____
(Print Name of Bidder)

By _____*
(Signature)

_____
(Print Name and Title of Bidder's Signatory)

By _____*
(Signature)

_____
(Print Name and Title of Bidder's Signatory)

_____
(Print Name of Surety)

By _____
(Signature)

_____
(Print Name and Title of Surety's Signatory)

_____

_____
(Print Address of Surety)

Surety's Telephone No._____

***Refer to Section I-3 for authorized signatories and requirements for documentation to be included with the Bid to demonstrate the authority of signatories and, if applicable, establishment of a joint venture.**

_____
Bidder's Name

PROPOSAL

SALINITY MANAGEMENT PIPELINE, PHASE 2A

SPECIFICATIONS NO. 470

The Bidder proposes to construct the Salinity Management Pipeline, Phase 2A in accordance with the Calleguas Municipal Water District Specifications No. 470 and with the Drawings for the unit and lump sum prices indicated herein below.

BID SCHEDULE

SCHEDULE "A" WELDED STEEL PIPE

Item No.	**Quantity**	**Unit**	**Item Description with Unit Prices Written in Words**	**Unit Cost (Figures)**	**Extended Total (Figures)**
1	JOB	LS	Mobilization and preparatory work at_____ _____ _____ Dollars (Lump Sum) (LS)	$_____ Lump Sum	$_____
2	4,165	LF	Furnish and install 30-inch welded steel pipe in paved areas at_____ _____ _____ Dollars/Linear Foot (LF)	$_____ Per LF	$_____
3	8,035	LF	Furnish and install 30-inch welded steel pipe in unpaved areas at_____ _____ _____ Dollars/Linear Foot (LF)	$_____ Per LF	$_____
4	JOB	LS	Furnish and install sheeting, shoring, bracing, or sloping of excavations at _____ _____ _____ Dollars (Lump Sum) (LS)	$_____ Lump Sum	$_____
5		Ea.	24-inch manhole outlet on 30-inch welded steel pipe and concrete manhole access structure_____ _____ _____ Dollars per Each	$_____ Each	$_____

_____
Bidder's Name

BID SCHEDULE (Continued)

Item No.	Quantity	Unit	Item Description with Unit Prices Written in Words	Unit Cost (Figures)	Extended Total (Figures)
6		Ea.	8-inch outlet on 30-inch welded steel pipe at _____ _____ _____ Dollars per Each	$_____ Each	$_____
7	2	Ea.	6-inch outlet on 30-inch welded steel pipe at _____ _____ _____ Dollars per Each	$_____ Each	$_____
8	1	Ea.	Furnish and install 42-inch steel Casing No. 1 and 30-inch welded steel pipe and connections at_____ _____ _____ Dollars per Each	$_____ Each	$_____
9	1	Ea.	Furnish and install 42-inch steel Casing No. 2 and 30-inch welded steel pipe and connections at_____ _____ _____ Dollars per Each	$_____ Each	$_____
10	1	Ea.	Furnish and install 42-inch steel Casing No. 3 and 30-inch welded steel pipe and connections at_____ _____ _____ Dollars per Each	$_____ Each	$_____

SCHEDULE "B" HDPE PIPE

Item No.	Quantity	Unit	Item Description with Unit Prices Written in Words	Unit Cost (Figures)	Extended Total (Figures)
11	JOB	LS	Mobilization and preparatory work at_____ _____ _____ Dollars (Lump Sum) (LS)	$_____ Lump Sum	$_____

BID SCHEDULE (Continued)

Item No.	Quantity	Unit	Item Description with Unit Prices Written in Words	Unit Cost (Figures)	Extended Total (Figures)
12	4,165	LF	Furnish and install 32-inch HDPE pipe in paved areas at_____ _____ _____ Dollars/Linear Foot (LF)	$_____ Per LF	$_____
13	8,035	LF	Furnish and install 32-inch HDPE pipe in unpaved areas at_____ _____ _____ Dollars/Linear Foot (LF)	$_____ Per LF	$_____
14	JOB	LS	Furnish and install sheeting, shoring, bracing, or sloping of excavations at _____ _____ _____ Dollars (Lump Sum) (LS)	$_____ Lump Sum	$_____
15		Ea.	30-inch ID manhole outlet on 32-inch HDPE pipe and concrete manhole access structure_____ _____ _____ Dollars per Each	$_____ Each	$_____
16		Ea.	8-inch outlet on 32-inch HDPE pipe at _____ _____ _____ Dollars per Each	$_____ Each	$_____
17		Ea.	6-inch outlet on 32-inch HDPE pipe at _____ _____ _____ Dollars per Each	$_____ Each	$_____
18	1	Ea.	Furnish and install 42-inch steel Casing No. 1 and 32-inch HDPE pipe and connections at_____ _____ _____ Dollars per Each	$_____ Each	$_____

BID SCHEDULE (Continued)

Item No.	Quantity	Unit	Item Description with Unit Prices Written in Words	Unit Cost (Figures)	Extended Total (Figures)
19	1	Ea.	Furnish and install 42-inch steel Casing No. 2 and 32-inch HDPE pipe and connections at_____ _____ _____ Dollars per Each	$_____ Each	$_____
20	1	Ea.	Furnish and install 42-inch steel Casing No. 3 and 32-inch HDPE pipe and connections at_____ _____ _____ Dollars per Each	$_____ Each	$_____
21	JOB	LS	Tracer system electrical continuity testing at _____ _____ _____ Dollars (Lump Sum) (LS)	$_____ Lump Sum	$_____

SCHEDULE "C" ITEMS COMMON TO SCHEDULE "A" AND SCHEDULE "B"

Item No.	Quantity	Unit	Item Description with Unit Prices Written in Words	Unit Cost (Figures)	Extended Total (Figures)
22	JOB	LS	Potholing and pothole report at _____ _____ _____ Dollars (Lump Sum) (LS)	$_____ Lump Sum	$_____
23	1	Ea.	Blow-Off No. 1 at Suction Side pipeline station _____ and discharge side pipeline station _____ at_____ _____ _____ Dollars per Each	$_____ Each	$_____
24	1	Ea.	Blow-Off No. 2 at Suction Side pipeline station _____ and discharge side pipeline station _____ at_____ _____ _____ Dollars per Each	$_____ Each	$_____

BID SCHEDULE (Continued)

Item No.	Quantity	Unit	Item Description with Unit Prices Written in Words	Unit Cost (Figures)	Extended Total (Figures)
25	1	Ea.	6-Inch AVARV Assembly No. 1 and piping at pipeline station _____ at__ _____ _____ _____ Dollars per Each	$_____ Each	$_____
26	1	Ea.	6-Inch AVARV Assembly No. 2 and piping at pipeline station _____ at__ _____ _____ _____ Dollars per Each	$_____ Each	$_____
27	JOB	LS	Video inspection of all mainline pipe at _____ _____ _____ Dollars (Lump Sum) (LS)	$_____ Lump Sum	$_____
28	JOB	LS	Flushing and testing of all water system components at _____ _____ _____ Dollars (Lump Sum) (LS)	$_____ Lump Sum	$_____
29	JOB	LS	Prepare, furnish, install and maintain all SWPPP required controls at _____ _____ _____ _____ Dollars (Lump Sum) (LS)	$_____ Lump Sum	$_____
30	JOB	LS	Temporary traffic control and striping at _____ _____ _____ Dollars (Lump Sum) (LS)	$_____ Lump Sum	$_____
31	4	Ea.	Utility support and protection in place of interfering utilities not shown on the Drawings per Standard Drawing 1102 at_____ _____ _____ Dollars per Each	$_____ Each	$_____

BID SCHEDULE (Continued)

Item No.	Quantity	Unit	Item Description with Unit Prices Written in Words	Unit Cost (Figures)	Extended Total (Figures)
32	4	Ea.	Utility support and protection in place of interfering utilities not shown on the Drawings per Standard Drawing 1103 at_____ _____ _____ Dollars per Each	$_____ Each	$_____
33	200	LF	Net increase or decrease for removal of pavement in thickness increments of 1 inch along full width of trench for 30-inch welded steel or 32-inch HDPE pipe at _____ _____ _____ Dollars/Linear Foot (LF)	$_____ Per LF	$_____
34	100	LF	Net increase or decrease for removal of pavement in thickness increments of 1 inch along full width of trench for 6-inch or 8-inch pipe at _____ _____ _____ Dollars/Linear Foot (LF)	$_____ Per LF	$_____
35	JOB	LS	Asphalt overlay at _____ _____ _____ _____ Dollars (Lump Sum) (LS)	$_____ Lump Sum	$_____
36	4,000	SF	Net increase or decrease in asphalt overlay at _____ _____ _____ Dollars/Square Foot (SF)	$_____ Per SF	$_____
37	JOB	LS	Permanent pavement striping and markings at_____ _____ _____ Dollars (Lump Sum (LS)	$_____ Lump Sum	$_____

BID SCHEDULE (Continued)

Item No.	Quantity	Unit	Item Description with Unit Prices Written in Words	Unit Cost (Figures)	Extended Total (Figures)
38	1,000	LF	Net increase in depth of 30-inch welded steel or 32-inch HDPE pipe installation in depth increments of 12 inches at _____ _____ _____ Dollars/Linear Foot (LF)	$_____ Per LF	$_____
39	100	LF	Net increase in depth of 6-inch or 8-inch pipe installation in depth increments of 12 inches at _____ _____ _____ Dollars/Linear Foot (LF)	$_____ Per LF	$_____
40	300	LF	Furnish and install crushed rock for 30-inch welded steel or 32-inch HDPE pipe as directed by Owner at_____ _____ _____ Dollars/Linear Foot (LF)	$_____ Per LF	$_____
41	20	Ea.	Provide one traffic control flag person for an 8-hour period as directed by the Owner at_____ _____ _____ Dollars per Each	$_____ Each	$_____
42	JOB	LS	Furnish and deliver additional 30-inch welded steel or 32-inch HDPE pipe at_____ _____ _____ Dollars (Lump Sum (LS)	$_____ Lump Sum	$_____
43	1	Ea.	Removal of obstruction larger than 80% of the pipe casing during pipe ramming casing installation_____ _____ _____ Dollars per Each	$_____ Each	$_____

_____
Bidder's Name

BID SCHEDULE (Continued)

Item No.	Quantity	Unit	Item Description with Unit Prices Written in Words	Unit Cost (Figures)	Extended Total (Figures)
44	1	Ea.	Removal of obstruction larger than 1/3 of the pipe casing during auger boring casing installation_____ _____ _____ Dollars per Each	$_____ Each	$_____

TOTAL FOR BASE BID SCHEDULES "A" + SCHEDULE "C"
Sum of Bid Items 1 through 10 AND 22 through 44: $_____
(Figures)

_____

_____Dollars
(Spell out Dollar Figure)

DEDUCTION FROM SCHEDULE "A" AND SCHEDULE "C" (OPTIONAL ITEM)

Lump Sum Deduction. In the event a major supplier of materials, such as main line pipe, reduces its price shortly before bid opening, Bidders may enter a lump sum deduction ("Base Bid Deduct"). Such lump sum will be prorated over the following bid items within Schedule "A" and Schedule "C," as selected by the Bidder, by equal incremental reductions in the shown Unit Costs.

– $ _____
Base Bid Deduct (Figures)

$ _____
Adjusted Base Bid (Figures)

$_____ Dollars
Adjusted Base Bid (Words)

Bid Item Nos. _____

_____

_____
Bidder's Name

BID SCHEDULE (Continued)

TOTAL FOR BASE BID SCHEDULES "B" + SCHEDULE "C"
Sum of Bid Items 11 through 44: $_____
(Figures)

_____

_____Dollars
(Spell out Dollar Figure)

DEDUCTION FROM SCHEDULE "B" AND SCHEDULE "C" (OPTIONAL ITEM)

Lump Sum Deduction. In the event a major supplier of materials, such as main line pipe, reduces its price shortly before bid opening, Bidders may enter a lump sum deduction ("Base Bid Deduct"). Such lump sum will be prorated over the following bid items within Schedule "B" and Schedule "C," as selected by the Bidder, by equal incremental reductions in the shown Unit Costs.

– $ _____
Base Bid Deduct (Figures)

$ _____
Adjusted Base Bid (Figures)

$_____ Dollars
Adjusted Base Bid (Words)

Bid Item Nos. _____

_____

NOTES:

1. Bidders are required to bid on all items in at least one of the following combinations of Schedules:

   a. Schedule "A" and Schedule "C"
   b. Schedule "B" and Schedule "C"

2. The determination of the lowest responsible bidder will be based on the Adjusted Base Bid(s) if a Base Bid Deduct(s) is provided or on the Total for Base Bid(s) if no Base Bid Deduct(s) is provided. The determination of the lowest responsible bidder will be based on the lowest bid submitted for Schedules "A" plus "C" or for Schedules "B" plus "C", whichever results in the lowest cost to the District.

3. The District reserves the right to reject any or all proposals and bid items.

4. All extensions of unit prices will be subject to verification by the District.

5. All prices shall include all taxes, insurance, licenses, transportation, delivery and handling charges and duties, etc. and construction complete and in place.

6. The total bid price shall include all Work described in the Contract Documents. If no separate bid item is provided for any portion of the Work, the price thereof shall be considered to be included in the bid item which most closely applies to that portion of the Work.

_____
Bidder's Name

PROPOSAL

INFORMATION REQUIRED OF THE BIDDER

1. Name_____

2. Address_____

3. Telephone_____

4. Type of firm - Corporation, Partnership, Individual, Joint Venture, or Limited Liability Company

_____

5. Organized under laws of the State of _____

6. Names & addresses as required for the type of firm in the Instruction to Bidders Section 1-7.5.a.

_____

_____

_____

_____

_____

_____

_____

_____

_____

7. List projects which have been completed by Bidder showing required experience as specified in Section N-8 of the Notice Inviting Bids. Include reference information for these projects and contact persons as shown below. FILL IN ALL OF THE SPACES excepting if the Bidder is to bid only one pipe material, experience information is not required for the pipe material not being bid. All other information requested is required. Attach additional sheets if necessary.

_____
Bidder's Name

PROPOSAL

INFORMATION REQUIRED OF THE BIDDER (Continued)

Provide at least five projects which demonstrate that the Bidder's minimum general pipeline experience requirements are met for this project. See Section N-8 of the Notice Inviting Bids for Specific Requirements.

GENERAL PIPELINE PROJECT EXPERIENCE NO. 1

Client:_____

Project Name and Location:_____

_____

Pipeline Material: _____

Pipeline Length: _____

Major Component Description: _____

_____

_____

Completed Date: _____ Contract Amount: $ _____

Contact Person: _____ Telephone No: _____

GENERAL PIPELINE PROJECT EXPERIENCE NO. 2

Client: _____

Project Name and Location: _____

_____

Pipeline Material: _____

Pipeline Length: _____

Major Component Description: _____

_____

_____

Completed Date: _____ Contract Amount: $ _____

Contact Person: _____ Telephone No: _____

PROPOSAL

INFORMATION REQUIRED OF THE BIDDER (Continued)

GENERAL PIPELINE PROJECT EXPERIENCE NO. 3

Client: _____

Project Name and Location: _____

_____

Pipeline Material: _____

Pipeline Length: _____

Major Component Description: _____

_____

_____

Completed Date: _____ Contract Amount: $ _____

Contact Person: _____ Telephone No: _____

GENERAL PIPELINE PROJECT EXPERIENCE NO. 4

Client: _____

Project Name and Location: _____

_____

Pipeline Material: _____

Pipeline Length: _____

Major Component Description: _____

_____

_____

Completed Date: _____ Contract Amount: $ _____

Contact Person: _____ Telephone No: _____

PROPOSAL

INFORMATION REQUIRED OF THE BIDDER (Continued)

GENERAL PIPELINE PROJECT EXPERIENCE NO. 5

Client: _____

Project Name and Location: _____

_____

Pipeline Material: _____

Pipeline Length: _____

Major Component Description: _____

_____

_____

Completed Date: _____ Contract Amount: $ _____

Contact Person: _____ Telephone No: _____

PROPOSAL

INFORMATION REQUIRED OF THE BIDDER (Continued)

Provide at least three pipeline projects involving traffic control of such complexity and magnitude which demonstrates that the Bidder's minimum experience requirements are met for this project. See Section N-8 of the Notice Inviting Bids for Specific Requirements.

TRAFFIC CONTROL PROJECT EXPERIENCE NO. 1

Client: _____

Project Name and Location: _____

_____

Project Description: _____

_____

Major Traffic Control Features: _____

_____

_____

Completed Date: _____ Contract Amount: $ _____

Contact Person: _____ Telephone No: _____

TRAFFIC CONTROL PROJECT EXPERIENCE NO. 2

Client: _____

Project Name and Location: _____

_____

Project Description: _____

_____

Major Traffic Control Features: _____

_____

_____

Completed Date: _____ Contract Amount: $ _____

Contact Person: _____ Telephone No: _____

PROPOSAL

INFORMATION REQUIRED OF THE BIDDER (Continued)

TRAFFIC CONTROL PROJECT EXPERIENCE NO. 3

Client: _____

Project Name and Location: _____

_____

Project Description: _____

_____

Major Traffic Control Features: _____

_____

_____

Completed Date: _____ Contract Amount: $ _____

Contact Person: _____ Telephone No: _____

_____
Bidder's Name

PROPOSAL

INFORMATION REQUIRED OF THE BIDDER (Continued)

Provide at least two projects involving trenchless tunnel installation of steel casing which demonstrate that the Bidder's minimum experience requirements are met for this project. See Section N-8 of the Notice Inviting Bids for Specific Requirements.

TUNNELING PROJECT EXPERIENCE NO. 1

Client: _____

Project Name and Location: _____

_____

Type of Installation: _____

Casing Diameter: _____Casing Length: _____

Major Component Description: _____

_____

_____

Completed Date: _____ Contract Amount: $ _____

Contact Person: _____ Telephone No: _____

TUNNELING PROJECT EXPERIENCE NO. 2

Client: _____

Project Name and Location: _____

_____

Type of Installation: _____

Casing Diameter: _____Casing Length: _____

Major Component Description: _____

_____

_____

Completed Date: _____ Contract Amount: $ _____

Contact Person: _____ Telephone No: _____

_____
Bidder's Name

PROPOSAL

INFORMATION REQUIRED OF THE BIDDER (Continued)

Provide at least two projects involving trenchless tunnel installation of steel casing which demonstrate that the Bidder's subcontractor's minimum experience requirements are met for this project. See Section N-8 of the Notice Inviting Bids for Specific Requirements.

TUNNELING SUBCONTRACTOR PROJECT EXPERIENCE NO. 1

Client: _____

Project Name and Location: _____

_____

Type of Installation: _____

Casing Diameter: _____Casing Length: _____

Major Component Description: _____

_____

_____

Completed Date: _____ Contract Amount: $ _____

Contact Person: _____ Telephone No: _____

TUNNELING SUBCONTRACTOR PROJECT EXPERIENCE NO. 2

Client: _____

Project Name and Location: _____

_____

Type of Installation: _____

Casing Diameter: _____Casing Length: _____

Major Component Description: _____

_____

_____

Completed Date: _____ Contract Amount: $ _____

Contact Person: _____ Telephone No: _____

_____
Bidder's Name

PROPOSAL

INFORMATION REQUIRED OF THE BIDDER (Continued)

Provide at least two projects involving installation of welded steel pipe which demonstrate that the Bidder's minimum experience requirements are met for this project. This information is required only if the Bidder will submit a bid for welded steel pipe. (Schedule "A"). See Section N-8 of the Notice Inviting Bids for Specific Requirements.

WELDED STEEL PIPELINE PROJECT EXPERIENCE NO. 1

Client: _____

Project Name and Location: _____

_____

Pipeline Material: _____

Pipeline Length: _____

Major Component Description: _____

_____

_____

Completed Date: _____ Contract Amount: $ _____

Contact Person: _____ Telephone No: _____

WELDED STEEL PIPELINE PROJECT EXPERIENCE NO. 2

Client: _____

Project Name and Location: _____

_____

Pipeline Material: _____

Pipeline Length: _____

Major Component Description: _____

_____

_____

Completed Date: _____ Contract Amount: $ _____

Contact Person: _____ Telephone No: _____

PROPOSAL

INFORMATION REQUIRED OF THE BIDDER (Continued)

Provide at least two projects involving installation of HDPE pipe which demonstrate that the Bidder's minimum experience requirements are met for this project. This information is required only if the Bidder will submit a bid for HDPE pipe (Schedule "B"). See Section N-8 of the Notice Inviting Bids for Specific Requirements.

HDPE PIPELINE PROJECT EXPERIENCE NO. 1

Client: _____

Project Name and Location: _____

_____

Pipeline Material: _____

Pipeline Length: _____

Major Component Description: _____

_____

_____

Completed Date: _____ Contract Amount: $ _____

Contact Person: _____ Telephone No: _____

HDPE PIPELINE PROJECT EXPERIENCE NO. 2

Client: _____

Project Name and Location: _____

_____

Pipeline Material: _____

Pipeline Length: _____

Major Component Description: _____

_____

_____

Completed Date: _____ Contract Amount: $ _____

Contact Person: _____ Telephone No: _____

Replies to these inquiries must be full and explicit.

PROPOSAL
INFORMATION REQUIRED OF THE BIDDER (continued)

8. When, by whom, and in what manner was the site of this proposed work inspected on behalf of the Bidder.

_____

_____

_____

_____

_____

_____

9. The Bidder shall herein set forth the name and the location of the place of business of each subcontractor who will perform work or labor or render service to the General Contractor in or about the construction of the Work in an amount in excess of one-half (1/2) of one percent (1%) of the General Contractor's total bid, and the portion of the Work which will be done by each such subcontractor. (See Section 5.12.2 of the General Conditions) Attach additional sheets if necessary.

Name of Subcontractor	**Location of Place of Business**	**Portion (Type) of Work To be Done**

_____
Bidder's Name

PROPOSAL

INFORMATION REQUIRED OF THE BIDDER (continued)

10. Surety Information:

Surety Company: _____

Surety Address: _____

Representative Company: _____

Representative Address: _____

Contact Person: _____

Contact Phone No: _____

NON-COLLUSION AFFIDAVIT TO BE EXECUTED

BY BIDDER AND SUBMITTED WITH BID

STATE OF _____)
) SS
COUNTY OF _____)

_____, being first duly sworn, deposes and says that he
(Name)
or she is the _____ of _____
(Title) (Name of Bidding Entity)

the party making the foregoing Bid, that the Bid is not made in the interest of, or on behalf of, any undisclosed person, partnership, company, association, organization, or corporation; that the Bid is genuine and not collusive or sham; that the Bidder has not directly or indirectly induced or solicited any other bidder to put in a false or sham Bid, and has not directly or indirectly colluded, conspired, connived, or agreed with any bidder or anyone else to put in a sham bid, or that anyone shall refrain from bidding; that the Bidder has not in any manner, directly or indirectly, sought by agreement, communication, or conference with any one to fix the Bid price of the Bidder or any other Bidder, or to fix any overhead, profit, or cost element of the Bid price, or of that of any other bidder, or to secure any advantage against the public body awarding the Contract of anyone interested in the proposed Contract; that all statements contained in the Bid are true; and, further, that the Bidder has not, directly or indirectly, submitted his or her Bid price or any breakdown thereof, or the contents thereof, or divulged information or data relative thereto, or paid, and will not pay, any fee to any corporation, partnership, company, association, reorganization, bid depository, or to any member or agent thereof to effectuate a collusive or sham bid.

Executed at _____, _____,
(State)
on the day of _____, 20_____.

_____
(Print Name and Title of Signatory for Bidder)

_____
(Print Name of Bidder and Type of Entity)

_____*
(Signature)

*** Signature shall be notarized using a form which is in accordance with current law and which shall be included with the Bid Proposal.**

CERTIFICATION OF BIDDER REGARDING EQUAL EMPLOYMENT OPPORTUNITY

INSTRUCTIONS

This certification is required pursuant to Executive Order 11246 (30 F. R. 12319-25). The implementing rules and regulations provide that any bidder or prospective contractor, or any of their proposed subcontractors, shall state as an initial part of the bid or negotiations of the contract whether it has participated in any previous contract or subcontract subject to the equal opportunity clause; and, if so, whether it has filed all compliance reports due under applicable instructions.

Where the certification indicates that the bidder has not filed a compliance report due under applicable instructions, such bidder shall be required to submit a compliance report within seven calendar days after bid opening. No contract shall be awarded unless such report is submitted.

CERTIFICATION BY BIDDER

NAME AND ADDRESS OF BIDDER *(Includes ZIP Code)*

1. Bidder has participated in a previous contract or subcontract subject to the Equal Opportunity Clause.
   ☐ Yes ☐ No

2. Compliance reports were required to be filed in connection with such contract or subcontracts.

   ☐ Yes ☐ No

3. Bidder has filed all compliance reports due under applicable instructions, including SF-100.

   ☐ Yes ☐ No ☐ None Required

4. Have you ever been or are you being considered for sanction due to violation of Executive Order 11246 as amended?

   ☐ Yes ☐ No

NAME AND TITLE OF SIGNER *[Please type]*

SIGNATURE	DATE

This page intentionally left blank.

CERTIFICATION BY PROPOSED SUBCONTRACTOR REGARDING EQUAL EMPLOYMENT OPPORTUNITY

NAME OF PRIME CONTRACTOR	PROJECT NUMBER

INSTRUCTIONS

This certification is required pursuant to Executive Order 11246 (30 F. R. 12319-25), and its implementing rules and regulations which provide that any bidder or prospective contractor, or any of their proposed subcontractors, shall state as an initial part of the bid or negotiations of the contract whether it has participated in any previous contract or subcontract subject to the Equal Opportunity Clause; and, if so, whether it has filed all compliance reports due under applicable instructions.

Where the certification indicates that the subcontractor has not filed a compliance report due under applicable instructions, such proposed subcontractor shall be required to submit a compliance report before the owner approves the subcontract or permits work to begin under the subcontract.

SUBCONTRACTOR'S CERTIFICATION

NAME AND ADDRESS OF SUBCONTRACTOR *(Include ZIP Code)*

1. Proposed subcontractor has participated in a previous contract or subcontract subject to the Equal Opportunity Clause.
   ☐ Yes ☐ No

2. Compliance reports were required to be filed in connection with such contract or subcontract.
   ☐ Yes ☐ No

3. Proposed subcontractor has filed all compliance reports due under applicable instructions, including SF-100.
   ☐ Yes ☐ No ☐ None Required

4. Have you ever been or are you being considered for sanction due to violation of Executive Order 11246 as amended?
   ☐ Yes ☐ No

NAME AND TITLE OF SIGNER *[Please type]*

SIGNATURE	DATE

This page intentionally left blank.

U.S. Department of the Interior

Certifications Regarding Debarment, Suspension and Other Responsibility Matters, Drug-Free Workplace Requirements and Lobbying

Persons signing this form should refer to the regulations referenced below for complete instructions:

Certification Regarding Debarment, Suspension, and Other Responsibility Matters - Primary Covered Transactions - **The prospective primary participant further agrees by submitting this proposal that it will include the clause titled, "Certification Regarding Debarment, Suspension, Ineligibility and Voluntary Exclusion - Lower Tier Covered Transaction," provided by the department or agency entering into this covered transaction, without modification, in all lower tier covered transactions and in all solicitations for lower tier covered transactions.** See below for language to be used or use this form certification and sign. (See Appendix A of Subpart D of 43 CFR Part 12.)

Certification Regarding Debarment, Suspension, Ineligibility and Voluntary Exclusion - Lower Tier Covered Transactions - (See Appendix B of Subpart D of 43 CFR Part 12.)

Certification Regarding Drug-Free Workplace Requirements - Alternate I. (Grantees Other Than Individuals) and Alternate II. (Grantees Who are Individuals) - (See Appendix C of Subpart D of 43 CFR Part 12)

Signature on this form provides for compliance with certification requirements under 43 CFR Parts 12 and 18. The certifications shall be treated as a material representation of fact upon which reliance will be placed when the Department of the Interior determines to award the covered transaction, grant, cooperative agreement or loan.

PART A: Certification Regarding Debarment, Suspension, and Other Responsibility Matters- Primary Covered Transactions

CHECK____IF THIS CERTIFICATION IS FOR A PRIMARY COVERED TRANSACTION AND IS APPLICABLE.

(1) The prospective primary participant certifies to the best of its knowledge and belief, that it and its principals:

(a) Are not presently debarred, suspended, proposed for debarment, declared ineligible, or voluntarily excluded by any Federal department or agency;

(b) Have not within a three-year period preceding this proposal been convicted of or had a civil judgment rendered against them for commission of fraud or a criminal offense in connection with obtaining, attempting to obtain, or performing a public (Federal, State or local) transaction or contract under a public transaction; violation of Federal or State antitrust statutes or commission of embezzlement, theft, forgery, bribery, falsification or destruction of records, making false statements, or receiving stolen property;

(c) Are not presently indicted for or otherwise criminally or civilly charged by a governmental entity (Federal, State or local) with commission of any of the offenses enumerated in paragraph (1)(b) of this certification; and

(d) Have not within a three-year period preceding this application/proposal had one or more public transactions (Federal, State or local) terminated for cause or default.

(2) Where the prospective primary participant is unable to certify to any of the statements in this certification, such prospective participant shall attach an explanation to this proposal.

PART B: Certification Regarding Debarment, Suspension, Ineligibility and Voluntary Exclusion - Lower Tier Covered Transactions

CHECK____IF THIS CERTIFICATION IS FOR A LOWER TIER COVERED TRANSACTION AND IS APPLICABLE.

(1) The prospective lower tier participant certifies, by submission of this proposal, that neither it nor its principals is presently debarred, suspended, proposed for debarment, declared ineligible, or voluntarily excluded from participation in this transaction by any Federal department or agency.

(2) Where the prospective lower tier participant is unable to certify to any of the statements in this certification, such prospective participant shall attach an explanation to this proposal.

This form was electronically produced by Elite Federal Forms, Inc.

DI-2010
June 1995
(This form replaces DI-1953, DI-1954, DI-1955, DI-1956 and DI-1963)

PART C: Certification Regarding Drug-Free Workplace Requirements

CHECK___IF THIS CERTIFICATION IS FOR AN APPLICANT WHO IS NOT AN INDIVIDUAL.

Alternate I. (Grantees Other Than Individuals)

A. The grantee certifies that it will or continue to provide a drug-free workplace by:

(a) Publishing a statement notifying employees that the unlawful manufacture, distribution, dispensing, possession, or use of a controlled substance is prohibited in the grantee's workplace and specifying the actions that will be taken against employees for violation of such prohibition;

(b) Establishing an ongoing drug-free awareness program to inform employees about--
(1) The dangers of drug abuse in the workplace;
(2) The grantee's policy of maintaining a drug-free workplace;
(3) Any available drug counseling, rehabilitation, and employee assistance programs; and
(4) The penalties that may be imposed upon employees for drug abuse violations occurring in the workplace;

(c) Making it a requirement that each employee to be engaged in the performance of the grant be given a copy of the statement required by paragraph (a);

(d) Notifying the employee in the statement required by paragraph (a) that, as a condition of employment under the grant, the employee will --
(1) Abide by the terms of the statement; and
(2) Notify the employer in writing of his or her conviction for a violation of a criminal drug statute occurring in the workplace no later than five calendar days after such conviction;

(e) Notifying the agency in writing, within ten calendar days after receiving notice under subparagraph (d)(2) from an employee or otherwise receiving actual notice of such conviction. Employers of convicted employees must provide notice, including position title, to every grant officer on whose grant activity the convicted employee was working, unless the Federal agency has designated a central point for the receipt of such notices. Notice shall include the identification number(s) of each affected grant;

(f) Taking one of the following actions, within 30 calendar days of receiving notice under subparagraph (d)(2), with respect to any employee who is so convicted --
(1) Taking appropriate personnel action against such an employee, up to and including termination, consistent with the requirements of the Rehabilitation Act of 1973, as amended; or
(2) Requiring such employee to participate satisfactorily in a drug abuse assistance or rehabilitation program approved for such purposes by a Federal, State, or local health, law enforcement, or other appropriate agency;

(g) Making a good faith effort to continue to maintain a drug-free workplace through implementation of paragraphs (a) (b), (c), (d), (e) and (f).

B. The grantee may insert in the space provided below the site(s) for the performance of work done in connection with the specific grant:

Place of Performance (Street address, city, county, state, zip code)

_____

_____

_____

Check___if there are workplaces on files that are not identified here.

PART D: Certification Regarding Drug-Free Workplace Requirements

CHECK___IF THIS CERTIFICATION IS FOR AN APPLICANT WHO IS AN INDIVIDUAL.

Alternate II. (Grantees Who Are Individuals)

(a) The grantee certifies that, as a condition of the grant, he or she will not engage in the unlawful manufacture, distribution, dispensing, possession, or use of a controlled substance in conducting any activity with the grant;

(b) If convicted of a criminal drug offense resulting from a violation occurring during the conduct of any grant activity, he or she will report the conviction, in writing, within 10 calendar days of the conviction, to the grant officer or other designee, unless the Federal agency designates a central point for the receipt of such notices. When notice is made to such a central point, it shall include the identification number(s) of each affected grant.

PART E: Certification Regarding Lobbying
Certification for Contracts, Grants, Loans, and Cooperative Agreements

CHECK____IF CERTIFICATION IS FOR THE AWARD OF ANY OF THE FOLLOWING AND THE AMOUNT EXCEEDS $100,000: A FEDERAL GRANT OR COOPERATIVE AGREEMENT; SUBCONTRACT, OR SUBGRANT UNDER THE GRANT OR COOPERATIVE AGREEMENT.

CHECK____IF CERTIFICATION FOR THE AWARD OF A FEDERAL LOAN EXCEEDING THE AMOUNT OF $150,000, OR A SUBGRANT OR SUBCONTRACT EXCEEDING $100,000, UNDER THE LOAN.

The undersigned certifies, to the best of his or her knowledge and belief, that:

(1) No Federal appropriated funds have been paid or will be paid, by or on behalf of the undersigned, to any person for influencing or attempting to influence an officer or employee of an agency, a Member of Congress, and officer or employee of Congress, or an employee of a Member of Congress in connection with the awarding of any Federal contract, the making of any Federal grant, the making of any Federal loan, the entering into of any cooperative agreement, and the extension, continuation, renewal, amendment, or modification of any Federal contract, grant, loan, or cooperative agreement.

(2) If any funds other than Federal appropriated funds have been paid or will be paid to any person for influencing or attempting to influence an officer or employee of any agency, a Member of Congress, an officer or employee of Congress, or an employee of a Member of Congress in connection with this Federal contract, grant, loan, or cooperative agreement, the undersigned shall complete and submit Standard Form-LLL, "Disclosure Form to Report Lobbying," in accordance with its instructions.

(3) The undersigned shall require that the language of this certification be included in the award documents for all subawards at all tiers (including subcontracts, subgrants, and contracts under grants, loans, and cooperative agreements) and that all subrecipients shall certify accordingly.

This certification is a material representation of fact upon which reliance was placed when this transaction was made or entered into. Submission of this certification is a prerequisite for making or entering into this transaction imposed by Section 1352, title 31, U.S. Code. Any person who fails to file the required certification shall be subject to a civil penalty of not less than $10,000 and not more than $100,000 for each such failure.

As the authorized certifying official, I hereby certify that the above specified certifications are true.

SIGNATURE OF AUTHORIZED CERTIFYING OFFICIAL

TYPED NAME AND TITLE

DATE

DI-2010
June 1995
(This form replaces DI-1953, DI-1954, DI-1955, DI-1956 and DI-1963)

This page intentionally left blank.

DISCLOSURE OF LOBBYING ACTIVITIES

Approved by OMB 0348-0046

Complete this form to disclose lobbying activities pursuant to 31 U.S.C. 1352
(See reverse for public burden disclosure.)

1. Type of Federal Action: ☐ a. contract b. grant c. cooperative agreement d. loan e. loan guarantee f. loan insurance	**2. Status of Federal Action:** ☐ a. bid/offer/application b. initial award c. post-award	**3. Report Type:** ☐ a. initial filing b. material change **For Material Change Only:** year _____ quarter _____ date of last report _____
4. Name and Address of Reporting Entity: ☐ **Prime** ☐ **Subawardee** Tier _____, *if known*: **Congressional District**, *if known*: 4c	**5. If Reporting Entity in No. 4 is a Subawardee, Enter Name and Address of Prime:** **Congressional District**, *if known*:	
6. Federal Department/Agency:	**7. Federal Program Name/Description:** CFDA Number, *if applicable*: _____	
8. Federal Action Number, *if known*:	**9. Award Amount,** *if known*: $	
10. a. Name and Address of Lobbying Registrant (*if individual, last name, first name, MI*):	**b. Individuals Performing Services** (*including address if different from No. 10a*) (*last name, first name, MI*):	
11. Information requested through this form is authorized by title 31 U.S.C. section 1352. This disclosure of lobbying activities is a material representation of fact upon which reliance was placed by the tier above when this transaction was made or entered into. This disclosure is required pursuant to 31 U.S.C. 1352. This information will be available for public inspection. Any person who fails to file the required disclosure shall be subject to a civil penalty of not less than $10,000 and not more than $100,000 for each such failure.	Signature: _____ Print Name: _____ Title: _____ Telephone No.: _____ Date: _____	
Federal Use Only:		Authorized for Local Reproduction Standard Form LLL (Rev. 7-97)

INSTRUCTIONS FOR COMPLETION OF SF-LLL, DISCLOSURE OF LOBBYING ACTIVITIES

This disclosure form shall be completed by the reporting entity, whether subawardee or prime Federal recipient, at the initiation or receipt of a covered Federal action, or a material change to a previous filing, pursuant to title 31 U.S.C. section 1352. The filing of a form is required for each payment or agreement to make payment to any lobbying entity for influencing or attempting to influence an officer or employee of any agency, a Member of Congress, an officer or employee of Congress, or an employeeof a Member of Congress in connection with a covered Federal action. Complete all items that apply for both the initial filing and material change report. Refer to the implementing guidance published by the Office of Management and Budget for additional information.

1. Identify the type of covered Federal action for which lobbying activity is and/or has been secured to influence the outcome of a covered Federal action.

2. Identify the status of the covered Federal action.

3. Identify the appropriate classification of this report. If this is a followup report caused by a material change to the information previously reported, enter the year and quarter in which the change occurred. Enter the date of the last previously submitted report by this reporting entity for this covered Federal action.

4. Enter the full name, address, city, State and zip code of the reporting entity. Include Congressional District, if known. Check the appropriate classification of the reporting entity that designates if it is, or expects to be, a prime or subaward recipient. Identify the tier of the subawardee, e.g., the first subawardee of the prime is the 1st tier. Subawards include but are not limited to subcontracts, subgrants and contract awards under grants.

5. If the organization filing the report in item 4 checks "Subawardee," then enter the full name, address, city, State and zip code of the prime Federal recipient. Include Congressional District, if known.

6. Enter the name of the Federal agency making the award or loan commitment. Include at least one organizationallevel below agency name, if known. For example, Department of Transportation, United States Coast Guard.

7. Enter the Federal program name or description for the covered Federal action (item 1). If known, enter the full Catalog of Federal Domestic Assistance (CFDA) number for grants, cooperative agreements, loans, and loan commitments.

8. Enter the most appropriate Federal identifying number available for the Federal action identified in item 1 (e.g., Request for Proposal (RFP) number; Invitation for Bid (IFB) number; grant announcement number; the contract, grant, or loan award number; the application/proposal control number assigned by the Federal agency). Include prefixes, e.g., "RFP-DE-90-001."

9. For a covered Federal action where there has been an award or loan commitment by the Federal agency, enter the Federal amount of the award/loan commitment for the prime entity identified in item 4 or 5.

10. (a) Enter the full name, address, city, State and zip code of the lobbying registrant under the Lobbying Disclosure Act of 1995 engaged by the reporting entity identified in item 4 to influence the covered Federal action.

    (b) Enter the full names of the individual(s) performing services, and include full address if different from 10 (a). Enter Last Name, First Name, and Middle Initial (MI).

11. The certifying official shall sign and date the form, print his/her name, title, and telephone number.

According to the Paperwork Reduction Act, as amended, no persons are required to respond to a collection of information unless it displays a valid OMB Control Number. The valid OMB control number for this information collection is OMB No. 0348-0046. Public reporting burden for this collection of information is estimated to average 10 minutes per response, including time for reviewing instructions, searching existing data sources, gathering and maintaining the data needed, and completing and reviewing the collection of information. Send comments regarding the burden estimate or any other aspect of this collection of information, including suggestions for reducing this burden, to the Office of Management and Budget, Paperwork Reduction Project (0348-0046), Washington, DC 20503.

AGREEMENT

THIS AGREEMENT, made and entered into this _____day of _____ in the year two thousand _____, by and between the Calleguas Municipal Water District, a district organized and incorporated under the California Municipal Water District Act of 1911, hereinafter designated as Calleguas, party of the first part, and _____
_____
_____
_____
hereinafter designated as the Contractor, party of the second part.

WITNESSETH: That the parties hereto do mutually agree as follows:

ARTICLE I. For and in consideration of the payments and agreements hereinafter mentioned to be made and performed by Calleguas, the Contractor agrees with Calleguas to construct _____
_____
in conformance with Specifications No. _____ and to perform and complete in good and workmanlike manner all the Work pertaining thereto shown on the Drawings and described in the Specifications, to furnish at the Contractor's own cost and expense all tools, equipment, labor and materials necessary therefor, except such materials as in the Specifications are stipulated to be furnished by Calleguas, and to do everything required by this Agreement and the said Specifications and Drawings.

ARTICLE II. For furnishing all said materials and labor, furnishing and removing all plant, temporary works or structures, tools and equipment, and doing the Work contemplated and embraced in this Agreement; also for all loss and damage arising out of the nature of the Work aforesaid, or from the action of the elements, or from any unforeseen difficulties which may arise or be encountered in the prosecution of the work until its acceptance by Calleguas, and for all risks of every description connected with the work; also for all expense such as in the Specifications and Instructions to Bidders are expressly stipulated to be borne by the Contractor; and for well and faithfully completing the Work and the whole thereof, in the manner shown and described in the Drawings and Specifications and in accordance with the requirements of Calleguas under them and under the Instruction to Bidders, Calleguas will pay and the Contractor shall receive in full compensation therefor the prices named in the Bid Schedule of the Bid hereto attached; that is
_____
_____ Dollars ($_____).

ARTICLE III. Calleguas hereby promises and agrees with the Contractor to employ, and does hereby employ the Contractor to provide the materials and to do the Work according to the terms and conditions herein contained and referred to, for the prices aforesaid, and hereby contracts to pay the same at the time, in the manner and upon the conditions set forth in the Specifications; and the said parties for themselves, their heirs, executors, administrators, successors, and assigns, do hereby agree to the full performance of the covenants herein contained.

ARTICLE IV. The Notice Inviting Bids, the Instructions to Bidders, the Bid, the General Conditions, the Special Conditions, the Technical Specifications and the Drawings, and the Bonds, and any supplements, appendices, addenda or amendments to these documents, all of which are hereto attached, are hereby incorporated and made a part of this Agreement.

IN WITNESS WHEREOF: The parties hereto have caused the contract to be executed the day and year first above written.

CALLEGUAS MUNICIPAL WATER DISTRICT

By_____
President, Board of Directors

Attest:

_____
Secretary, Board of Directors

CONTRACTOR

_____
(signature of first Contractor signatory)

By_____
(*type or print name of first Contractor signatory)*

Its_____
(If the bidder is a corporation, the Agreement shall be signed above by one of the following: Chairman of the Board, President or any Vice President)

_____
(signature of second Contractor signatory)

By_____
(type or print name of second Contractor signatory)

Its_____
(If the bidder is a corporation, the Agreement shall be signed above by one of the following: Secretary, any Assistant Secretary, Chief Financial Officer or any Assistant Treasurer)

Approved as to Form:

Ferguson Case Orr Paterson LLP

_____
Douglas E. Kulper
General Counsel for Calleguas Municipal Water District

BOND FOR FAITHFUL PERFORMANCE

KNOW ALL PERSONS BY THESE PRESENTS:

That we, _____

_____

(hereinafter "Contractor") as principal, and _____

_____

_____

as surety, a corporation duly organized under the laws of the State of _____

and duly authorized to conduct a surety business in California, are held firmly bound unto Calleguas Municipal Water District (hereinafter "Calleguas"), in the sum of _____

_____

dollars ($_____), lawful money of the United States of America, for the payment whereof the Contractor and the surety bind themselves, their successors and assigns, jointly and severally firmly by these presents.

The condition of the above obligation is such that:

WHEREAS, the Contractor has been awarded and is about to enter into the annexed contract with Calleguas to construct _____

_____in conformance with Specifications No._____

and is required by Calleguas to give this bond in connection with the execution of this contract;

NOW, THEREFORE, the condition of the above obligation is such that if the Contractor shall well and truly do and perform all of the undertakings, covenants, agreements, terms, and conditions of this contract on its part to be kept and performed during the original term of the contract and any extensions thereof that may be granted by Calleguas, with or without notice to the surety, and during the life of any guarantee or warranty required under the contract, and shall also well and truly keep and perform all the undertakings, covenants, agreements, terms, and conditions of any and all duly authorized modifications, alterations, changes, or additions to this contract that may hereafter be made, notice to the surety of such modifications, alternations, changes, or additions or partial or full release of retained sums to the Contractor being hereby waived, then this obligation shall become null and void, otherwise it shall be and remain in full force and effect.

Whenever the Contractor is declared by Calleguas to be in default under the contract, and Calleguas has not terminated the performance of the Contractor or the authority of the Contractor to proceed with the work, the surety shall promptly cause the default to be remedied.

IN THE EVENT that the contract or any work thereunder is abandoned by the Contractor, or whenever under the provisions of this contract Calleguas terminates the performance of the Contractor or the

authority of the Contractor to continue the work, the surety hereby further agrees that it shall, if requested in writing by Calleguas, promptly and expeditiously take such action as is necessary to complete this contract by engaging persons other than the Contractor, unless otherwise agreed by Calleguas in writing.

No right of action shall accrue on this bond to or for the use of any person or entity other than Calleguas, its successors or assigns.

WITNESS our hands this _____ day of _____, 20____

Approved:

_____
Susan B. Mulligan
GENERAL MANAGER
of
Calleguas Municipal Water District

_____
Contractor

_____
(signature of first Contractor signatory)

By_____
(type or print name of first Contractor signatory)

Title _____
(If the Contractor is a corporation, the Chairman of the Board, President or any Vice President shall sign above.)

_____
(signature of second Contractor signatory)

By_____
(type or print name of second Contractor signatory)

Title _____
(If the Contractor is a corporation, the Secretary, any Assistant Secretary, Chief Financial Officer, or any Assistant Treasurer shall sign above.)

Approved as to form:
Ferguson Case Orr Paterson LLP

_____
Douglas E. Kulper
GENERAL COUNSEL
for
Calleguas Municipal Water District

Surety _____

Surety's bond number _____

Address _____

_____

Telephone number _____

By _____

_____
Title

Note: Execute, notarize, and submit this document in accordance with Section I-11 of the "Instructions to Bidders" and furnish an endorsed and executed Power of Attorney.

PAYMENT BOND

KNOW ALL PERSONS BY THESE PRESENTS:

That we,_____

_____

as principal, and _____

_____

as surety, a corporation duly organized under the laws of the State of _____ and duly authorized to conduct a surety business in California, are held and firmly bound unto the Calleguas Municipal Water District,

in the sum of _____

_____

Dollars ($_____), lawful money of the United States of America, for the

payment of which sum, well and truly to be made, we bind ourselves, jointly and

severally, firmly by these presents.

The condition of the above obligation is such that:

WHEREAS, said principal has been awarded and is about to enter into the annexed contract with

the Calleguas Municipal Water District to construct _____

_____ in conformance with Specifications No. _____ and is required by said District to give this bond in connection with the execution of said contract;

NOW, THEREFORE, if said principal as Contractor in said contract, or said principal's subcontractors, fails to pay for any materials, provisions, or other supplies, or equipment, used in, upon, for or about the performance of the work contracted to be done, or for any work or labor thereon of any kind, or for amounts due under the Unemployment Insurance Act with respect to such work or labor, said surety will pay for the same, in an amount not exceeding the sum specified above, and also, in case suit is brought upon this bond, a reasonable attorney's fee, to be fixed by the court. This bond shall inure to the benefit of any and all persons entitled to file claims under Civil Code Section 3181 of the State of California.

PROVIDED, that any alterations in the work to be done, or the material to be furnished, which may be made pursuant to the terms of said contract, shall not in any way release either the Contractor or the surety thereunder, nor shall any extensions of time granted under the provisions of said contract release either the Contractor or the surety, and notice of such alterations or extensions of the contract is hereby waived by the surety.

WITNESS our hands this _____ day of _____, 20____

Approved:

_____
Contractor

_____
Susan B. Mulligan
GENERAL MANAGER
of
Calleguas Municipal Water District

_____
(signature of first Contractor signatory)

By_____
(type or print name of first Contractor signatory)

Title _____
(If the Contractor is a corporation, the Chairman of the Board, President or any Vice President shall sign above.)

_____
(signature of second Contractor signatory)

By_____
(type or print name of second Contractor signatory)

Title _____
(If the Contractor is a corporation, the Secretary, any Assistant Secretary, Chief Financial Officer, or any Assistant Treasurer shall sign above.)

Approved as to form:
Ferguson Case Orr Paterson LLP

_____
Douglas E. Kulper
GENERAL COUNSEL
for
Calleguas Municipal Water District

Surety _____

Surety's bond number _____

Address _____

_____

Telephone number _____

By _____

_____
Title

Note: Execute, notarize, and submit this document in accordance with Section I-11 of the "Instructions to Bidders" and furnish an endorsed and executed Power of Attorney.

CONTRACTOR'S CERTIFICATION
CONCERNING LABOR STANDARDS AND PREVAILING WAGE REQUIREMENTS
(Required by 29 CFR 5.6)

TO *(Appropriate Recipient)*	DATE
	PROJECT NUMBER (If any)
C/O	
	PROJECT NAME

1. The undersigned, having executed a contract with _____ for the construction of the above-identified project acknowledges that:

   (a) The Labor Standards provisions or 29 CFR 5.5(a) and the appropriate wage determination of the Secretary of Labor are included in the aforesaid contract:

   (b) Correction of any infractions of the aforesaid provisions, including infractions by any subcontractors and any lower tier subcontractors, is Contractor's responsibility:

2. Contractor certifies that:

   (a) Neither Contractor nor any person, firm, corporation, partnership or association in which Contractor has a substantial interest or which has a substantial interest in Contractor is designated as an ineligible contractor by the Comptroller General of the United States pursuant to Section 5.12(a)(1) of the Regulations of the Secretary of Labor, Part 5 (29 CFR, Part 5) or pursuant to Section (a) of the Davis-Bacon Act, as amended (40 U.S.C. 276a-2(a)).

   (b) No part of the aforementioned contract has been or will be subcontracted to any subcontractor if such subcontractor or any person, firm, corporation, partnership or association in which such subcontractor has a substantial interest or which has a substantial interest in subcontractor is designated as an ineligible contractor pursuant to any of the aforementioned regulatory or statutory provisions.

3. Contractor agrees to obtain and forward to the aforementioned recipient within ten days after the execution of any subcontract, including those executed by Contractor's subcontractors and lower tier subcontractors, a Subcontractor's Certification Concerning Labor Standards and Prevailing Wage Requirements executed by the subcontractors.

4. Contractor certifies that:

   (a) The legal name and the business address of the undersigned are:

   _____

   (b) The undersigned is

   ☐ A SINGLE PROPRIETORSHIP ☐ A CORPORATION ORGANIZED IN THE STATE OF _____

   ☐ A PARTNERSHIP ☐ OTHER ORGANIZATION (Describe)_____

The penalty for making false statements is prescribed in U.S. Criminal Code U.S.C. § 1001

NAME AND TITLE OF SIGNER *[Please type]*	
SIGNATURE	DATE

(This page intentionally left blank)

SUBCONTRACTOR'S CERTIFICATION
CONCERNING LABOR STANDARDS AND PREVAILING WAGE REQUIREMENTS
(Required by 29 CFR 5.6)

TO *(Appropriate Recipient)*	DATE
	PROJECT NUMBER (If any)
C/O	
	PROJECT NAME

1. The undersigned, having executed a contract with _____
(Contractor or Subcontractor)

for _____ in the amount of $_____
(Nature of Work)

in the construction of the above-identified project, certifies that:

(a) The Labor Standards Provisions of *29 CFR 5.5(a)* and the appropriate wage determination of the Secretary of Labor are included in the aforesaid contract.

(b) Neither subcontractor nor any firm, corporation, partnership or association in which subcontractor has a substantial interest or which has a substantial interest in subcontractor is designated as an ineligible contractor by the Comptroller General of the United States pursuant to Section 5.12(a)(1) of the Regulations of the Secretary of Labor, Part 5 *(29 CFR, Part 5),* or pursuant to Section (a) of the Davis-Bacon Act, as amended *(40 U.S.C. 276a-2(a)).*

(c) No part of the aforementioned contract has been or will be subcontracted to any subcontractor if such subcontractor or any firm, corporation, partnership or association in which such subcontractor has a substantial interest or which has a substantial interest in subcontractor is designated as an ineligible contractor pursuant to the aforesaid regulatory or statutory provisions.

2. Subcontractor agrees to obtain and forward to the contractor, for transmittal to the Recipient, within ten days after the execution of any lower tier subcontract, a Subcontractor's Certification Concerning Labor Standards and Prevailing Wage Requirements, executed by the lower tier subcontractor, in duplicate.
(a) The workmen will report for duty on or about _____.
(Date)

3. Subcontractor certifies that:

(a) The legal name and the business address of the undersigned are:

_____

(b) The undersigned is

☐ A SINGLE PROPRIETORSHIP ☐ A CORPORATION ORGANIZED IN THE STATE OF _____

☐ A PARTNERSHIP ☐ OTHER ORGANIZATION (Describe)_____

The penalty for making false statements is prescribed in U.S. Criminal Code U.S.C. § 1001

NAME AND TITLE OF SIGNER *[Please type]*	
SIGNATURE	DATE

(This page intentionally left blank)

WELDED STEEL PIPE MANUFACTURER EXPERIENCE

WSP-1. Submit the information requested of this Section in accordance with Paragraph N-10 of the Notice Inviting Bids within 3 Working Days from the Bid Opening date.

WSP-2. Include reference information for listed projects and contact persons as shown below. FILL IN ALL OF THE SPACES. Attach additional sheets if necessary.

WSP-3. Give the name and address of the welded steel pipe manufacturer.

Manufacturer: _____

Address: _____

Address where pipe will be manufactured _____

_____

WSP-4. Provide a sufficient number of projects from the pipe manufacturer to document the manufacturing of a total of at least 10,000 feet of 30-inch diameter or larger AWWA C-200 welded steel pipe and AWWA C-205 cement mortar lining and coating for welded steel pipe which demonstrates experience conforming to the Notice Inviting Bids part N-10 and the requirements of this Project.

WELDED STEEL PIPE MANUFACTURER PROJECT EXPERIENCE NO. 1

Client: _____

Project Name and Location: _____

Project Description: _____lineal feet of _____-inch welded steel pipe.

Completed Date: _____

Contact Person: _____

Telephone Number: _____

WELDED STEEL PIPE MANUFACTURER PROJECT EXPERIENCE NO. 2

Client: _____

Project Name and Location: _____

Project Description: _____lineal feet of _____-inch welded steel pipe.

Completed Date: _____

Contact Person: _____

Telephone Number: _____

WELDED STEEL PIPE MANUFACTURER PROJECT EXPERIENCE NO. 3

Client: _____

Project Name and Location: _____

Project Description: _____lineal feet of _____-inch welded steel pipe.

Completed Date: _____

Contact Person: _____

Telephone Number: _____

WELDED STEEL PIPE MANUFACTURER PROJECT EXPERIENCE NO. 4

Client: _____

Project Name and Location: _____

Project Description: _____lineal feet of _____-inch welded steel pipe.

Completed Date: _____

Contact Person: _____

Telephone Number: _____

WELDED STEEL PIPE MANUFACTURER PROJECT EXPERIENCE NO. 5

Client: _____

Project Name and Location: _____

Project Description: _____lineal feet of _____-inch welded steel pipe.

Completed Date: _____

Contact Person: _____

Telephone Number: _____

Replies to these inquiries must be full and explicit.

HDPE PIPE MANUFACTURER EXPERIENCE

HDPE-1. Submit the information requested of this Section in accordance with Paragraph N-9 of the Notice Inviting Bids within 3 Working Days from the Bid Opening date.

HDPE-2. Include reference information for listed projects and contact persons as shown below. FILL IN ALL OF THE SPACES. Attach additional sheets if necessary.

HDPE-3. Give the name and address of the welded steel pipe manufacturer.

Manufacturer: _____

Address: _____

Address where pipe will be manufactured _____

_____

HDPE-4. Provide a sufficient number of projects from the pipe manufacturer to document the manufacturing of a total of at least 10,000 feet of 32-inch diameter or larger AWWA C-906 HDPE pressure pipe steel pipe which demonstrates experience conforming to the Notice Inviting Bids part N-9 and the requirements of this Project.

HDPE PIPE MANUFACTURER PROJECT EXPERIENCE NO. 1

Client: _____

Project Name and Location: _____

Project Description: _____lineal feet of _____-inch HDPE pipe.

Completed Date: _____

Contact Person: _____

Telephone Number: _____

HDPE PIPE MANUFACTURER PROJECT EXPERIENCE NO. 2

Client: _____

Project Name and Location: _____

Project Description: _____lineal feet of _____-inch HDPE pipe.

Completed Date: _____

Contact Person: _____

Telephone Number: _____

HDPE PIPE MANUFACTURER PROJECT EXPERIENCE NO. 3

Client: _____

Project Name and Location: _____

Project Description: _____lineal feet of _____-inch HDPE pipe.

Completed Date: _____

Contact Person: _____

Telephone Number: _____

HDPE PIPE MANUFACTURER PROJECT EXPERIENCE NO. 4

Client: _____

Project Name and Location: _____

Project Description: _____lineal feet of _____-inch HDPE pipe.

Completed Date: _____

Contact Person: _____

Telephone Number: _____

HDPE PIPE MANUFACTURER PROJECT EXPERIENCE NO. 5

Client: _____

Project Name and Location: _____

Project Description: _____lineal feet of _____-inch HDPE pipe.

Completed Date: _____

Contact Person: _____

Telephone Number: _____

Replies to these inquiries must be full and explicit.

GENERAL CONDITIONS

1. TERMS, DEFINITIONS AND PRELIMINARY MATTERS.

1.1. The Contract Documents Defined. "**Contract"** refers to the written Agreement between Calleguas Municipal Water District (Calleguas) and the Contractor covering the Work. "**Contract Documents"** refer to the Contract, the Notice Inviting Bids, the Instructions to Bidders, the Bid (as defined in the Instructions to Bidders), the Bonds, the General Conditions, the Special Conditions and the Technical Specifications, the Drawings, and any supplements, appendices, addenda, or amendments to these documents.

1.1.1. References to Specifications/Standards.

1.1.1.1. Reference in these Contract Documents to standards, specifications, manuals, or codes of any technical society, organization, or association, including, but not limited to, American National Standards Institute (ANSI), the American Society for Testing and Materials (ASTM), the American Waterworks Association (AWWA) or other recognized body, or to the laws or regulations of any governmental authority, whether such reference be specific or by implication, shall mean the latest edition or amendment of the standard specification, manual, code, or laws or regulations in effect at the time of opening of Bids (or on the effective date of the Contract if there were no Bids), except as may be otherwise specifically stated in the Contract Documents.

1.1.1.2. Where the context indicates that a referenced code section that has been renumbered, the reference shall be deemed a reference to the renumbered code section.

1.1.1.3. No provision of any referenced standard, specification, manual, or code, or any instruction of a Supplier, shall be effective to change the duties or responsibilities of Calleguas, the Contractor, or Engineer, or any of their subcontractors, consultants, agents, or employees from those set forth in the Contract Documents, nor shall any such provision or instruction be effective to assign to Calleguas, Engineer or any of their respective consultants, agents, or employees, any duty or authority to supervise or direct the performance of the Work or any duty or authority to undertake responsibility inconsistent with the provisions of the Contract Documents.

1.1.2. Words with a Technical or Trade Meaning. Material or work described in words with a well-known technical or trade meaning shall be held to refer to such technical or trade meaning.

1.2. Supplements or Modifications to the Contract Documents. The Contract Documents may be supplemented or modified by various forms of construction correspondence issued during the progress of the Work, including Responses to Requests for Interpretation/Clarification, Field Orders, Work Change Directives, Change Orders and certain defined notices such as the Notice of Award and the Notice to Proceed. Field Orders, Work Change Directives and Change Orders are addressed under Section 3 of these General Conditions entitled "Changes to the Work."

1.2.1. Request for Interpretation/Clarification. Requests for Interpretation/Clarification ("RFI/RFC") of a Contract Document(s) or the Work may be originated by Calleguas, the Engineer or the Contractor as necessary during the course of construction. When originated by the Contractor, RFI/RFCs shall be submitted in writing to Calleguas' Project Manager, either directly or through

Calleguas' Construction Inspector. RFI/RFC forms will be provided by Calleguas to the Contractor. All RFI/RFCs will be responded to in writing. A clarification may be a further delineation of the Work in the form of new details or an interpretation of conflicts or omissions. Calleguas has the right to issue clarifications without affecting the Contract Amount, Bid Schedule prices, Time(s) for Completion, or any Fixed Calendar Date(s).

1.2.2. Notices. Notices may be originated by Calleguas, the Engineer, or the Contractor during the course of construction. When originated by the Contractor, notices shall be addressed to Calleguas' Project Manager and shall be submitted in writing to Calleguas in one of the following manners: in person to Calleguas' Project Manager; through personal delivery to the Calleguas Construction Inspector; by fax to (805) 526-3675; by mail to 2100 Olsen Road, Thousand Oaks, California 91360; or by e-mail to the Calleguas Project Manager's e-mail address. Notices to the Contractor are addressed in Section 1.9.4.

1.3. Contract Documents Complementary. The Contract Documents are complementary, and what is called for in any one shall be as binding as if called for in all. The intention of the documents is to require a complete and finished piece of work, including all labor, materials, equipment and transportation necessary for the proper execution of the Work, with the exception of such items as are expressly stipulated in the Specifications or the Drawings to be furnished by Calleguas. Anything shown in the Drawings and not in the Specifications, or in the Specifications and not in the Drawings, or neither in the Specifications nor in the Drawings but necessary to properly complete the Work in accordance with the law and governmental rules and regulations, shall be performed by the Contractor as though shown in both the Drawings and the Specifications.

1.4. Order of Precedence.

1.4.1. Contract Documents. If there is a conflict between Contract Documents with respect to the installed Work, the Contractor shall furnish and install the equipment, material, device or installation which, in the opinion of Calleguas, has the highest quality, includes the largest quantity, meets the highest performance standards, and complies with the most stringent requirements. If there is a conflict within or between the Contract Documents with respect to construction activities and methods, the Contractor shall comply with those which, in the opinion of Calleguas, are the most stringent and restrictive.

1.4.2. Most Restrictive Requirements Apply. In all cases of differing requirements within or between the Contract Documents, regulations, ordinances, right-of-way deeds, agreements, licenses and/or encroachment permits, the Contractor is required to comply with the most restrictive requirements.

1.4.3. Dimensions. Dimensions called out in numbers shall govern over scaled dimensions. Work not dimensioned shall be installed according to the same dimensions as similar work that is shown and dimensioned.

1.4.4. Compliance Shall Not be Considered Extra Work. Compliance with the orders of precedence set forth in this Section shall not be considered Extra Work, nor limit in any way the Contractor's responsibility for complying with all applicable regulations and ordinances.

1.5. The "Drawings" or "Plans." The Drawings or Plans are those drawings prepared specifically for the Work for the purpose of delineating the Engineer's intentions concerning the Work as conceived and designed by the Engineer. The location of the Work, its general nature and extent, the outline of the lands owned or controlled by Calleguas and the form and general dimensions of structures, pipelines and facilities and appurtenant works are shown on the Drawings.

1.5.1. Drawings May Not Represent Actual Conditions. As set forth in the Instructions to Bidders, the Drawings for the Work show conditions as they are supposed or believed by the Engineer to exist, but it is not intended, or to be inferred, that the conditions as shown thereon constitute a representation by Calleguas that such conditions actually exist. Except as mandated by statute, the Contractor shall not be relieved of liability under the Contract; and Calleguas, the Engineer and their respective officers, directors, agents, consultants, employees or designated volunteers shall not be liable for any loss sustained by the Contractor as the result of any variance between conditions as shown on the Drawings and the actual conditions revealed during site inspections, the progress of the Work or otherwise.

1.5.2. Additional Drawings. When deemed necessary by the Engineer, additional detailed drawings will be furnished to the Contractor during the progress of the Work.

1.6. Right-of-Way.

1.6.1. Work Areas Furnished by Calleguas Shown in Contract Documents. Lands to be furnished by Calleguas for construction operations, roads, and other purposes are specifically shown on the Drawings or provided for in the Contract Documents. The Contractor shall adhere to all applicable stipulations and restrictions contained in the right-of-way deeds, agreements, licenses, and encroachment permits and shall restore or repair any damage which his operations may cause to property or improvements.

1.6.2. Contractor to Acquire Any Additional Work Areas. Should the Contractor desire or find it necessary to use any additional land during the construction of the Work, the Contractor shall make arrangements, pay for, and assume all responsibility for acquiring, using and restoring any additional work areas and facilities temporarily required. The Contractor shall indemnify/defend and hold Calleguas harmless from all claims, demands or causes of action by third parties, or otherwise, for damages caused by such actions associated with any additional work areas acquired or used by the Contractor.

1.6.3. Contractor Does Not Have Exclusive Use of Right-of-Way. Nothing herein contained and nothing marked on the Drawings shall be interpreted as giving the Contractor exclusive occupancy of the land provided.

1.6.3.1. Calleguas to Decide Which Contractor Shall Cease Work. When two or more contracts for Calleguas are being executed at one time on the same or adjacent land in such manner that work on one contract may interfere with that on another, Calleguas shall decide which contractor shall cease work, and which shall continue, or whether the work on both contracts shall progress at the same time, and the means of access for the execution of the contracts. Calleguas may grant such privilege of access or any other reasonable privilege to the Contractor so desiring, to the extent, amount, in the manner, and at the times permitted. No such decision as to the method or time

of conducting the Work or the use of territory shall be made the basis of any claim for Extra Work, except as provided in Subsection 2.3 of these General Conditions entitled "Delays."

1.6.3.2. Contractor Shall Not Unnecessarily Interfere with Other Contractors. Nothing herein shall be construed to entitle the Contractor to exclusive use of any street or public right-of-way during the performance of the Work, and the Contractor shall conduct his operations in such a manner as to not interfere unnecessarily with the work of other entities being performed in such streets or public rights-of-way.

1.6.4. Contractor to Proceed with Work in Areas Where Right-of-Way has been Acquired. In the event that any right-of-way as shown in the Contract Documents is not acquired prior to the time the Contractor is ready to perform the Work, Calleguas reserves the right to suspend all or part of the Work by the Contractor until the necessary rights can be obtained and to indicate areas where the Contractor may work. The Contractor shall proceed with construction in public rights-of-way or in those areas where right-of-way has been acquired in such a manner as to minimize impact to his costs and schedule.

1.7. Definitions. Whenever the words defined in this subsection, or pronouns used in their stead, occur in these Contract Documents, they shall have the meanings here given.

An "**Act of God"** shall mean an Act of God as defined in Section 7105 of the Public Contract Code.

"**Bidder**" shall mean the person, firm, corporation, limited liability company, partnership, or joint venture submitting a Bid in response to the Notice Inviting Bids.

A **"Calendar Day"** is a 24-hour period from midnight to midnight, including weekdays, Saturdays, Sundays, and holidays. Where the words "day" and "days" are used without capitalization, they shall be interpreted to mean "Calendar Day" and "Calendar Days," respectively.

"Calleguas" or **"District"** or **"Owner"** or **"CMWD"** shall mean the Calleguas Municipal Water District.

"claim" (with a small "c") shall mean a demand for something as due or an assertion of a right or an alleged right.

"Claim" (with a capital "C") shall mean a separate demand made by the Contractor in accordance with Section 8 for a time extension or payment of money or damages arising from Work done by, or on behalf of, the Contractor pursuant to this Contract.

The **"Contract Amount"** is the dollar amount written in Article II of the Contract between Calleguas and the Contractor.

"Contractor" shall mean the party contracting with Calleguas for the performance of Work required by these Contract Documents and the legal representative of said party, or the agent appointed to act for said party in the performance of the Work.

"Current Controlling Operation" shall mean any feature or combination of features of the Work, considered at the time by Calleguas, which, if delayed, will delay a Time for Completion or delay an operation that has a Fixed Calendar Date.

The **"Daily Work Report"** refers to a form entitled "Daily Work Report for Extra or Disputed Work" to be completed by the Contractor under certain circumstances set forth herein. A copy of the form is provided as an appendix to the Contract Documents. These forms will be provided to the Contractor by Calleguas upon request.

"Engineer" or "**Design Engineer,"** shall mean the entity which prepared the Plans and Specifications and who is designated in the Notice Inviting Bids, or any properly authorized representatives of that entity.

"Extra Work" shall mean labor, materials, and/or equipment which, during the performance of the Work shall, in the opinion of Calleguas and as provided by Section 3, become necessary or desirable for the proper completion of the Contract and, in the opinion of Calleguas, is not susceptible to classification under the unit price items named in the Bid Schedule or included in any item for which a lump sum is bid, and was not reasonably within the contemplation of the parties at the time of contracting.

A **"Fixed Calendar Date"** is a specific day, month, and year by which all or a specified portion of the Work must be completed. When a Fixed Calendar Date is established for completion of an activity, the Contractor shall complete that activity by that Fixed Calendar Date.

The **"Notice of Award"** refers to the written notice by Calleguas to the successful bidder stating that, upon compliance by the successful bidder with required conditions, Calleguas will execute the Contract.

The **"Notice to Proceed"** refers to the notice from Calleguas to the Contractor advising that the Contractor is authorized to start the Work.

"Permits" refers to the written licenses, warrants or agreements between Calleguas or the Contractor and an authorized person, agent or entity under which such person, agency or entity grants permission and/or sets the conditions under which portions of the Work may be performed. Compliance with permits, where applicable, is an integral part of the Work.

"Record Drawings" shall mean a set of the Drawings marked to show all changes from the original Drawings as bid, including all Change Orders, alignment changes, changes in horizontal or vertical location of underground pipes and utilities, Field Orders, and all other items that differ from the Drawings. The intent of the Record Drawings is to accurately document facilities as observed or as constructed in the field.

"Shop Drawings" are those details and sketches prepared by the Contractor or the materials supplier(s) or fabricator(s) before beginning fabrication and submitted by the Contractor to demonstrate that materials the Contractor proposes to furnish meet the requirements of the Contract Documents. Shop Drawings are subject to review and acceptance by the Engineer.

"Site" is the geographical location of the land within the work areas shown on the Drawings and/or within which the Work is to be installed or built.

"Specifications" shall refer to the General Conditions, the Special Conditions and the Technical Specifications collectively.

"Standard Drawings" or **"Standard Details"** depict details of typical Calleguas facilities. Where these terms are used, they shall mean the Calleguas Standard Drawings, unless indicated or specified otherwise.

"Standard Specifications" or **"Green Book"** or **"SSPWC"** shall mean the latest edition in effect at the time of opening of Bids (or on the effective date of the Contract if there were no Bids), unless otherwise specifically stated in the Contract Documents, of the publication entitled "Standard Specifications for Public Works Construction," and applicable amendments thereto, as written and promulgated by the Joint Cooperative Committee of the Southern California Chapter, American Public Works Association and Southern California District, Associated General Contractors of California. Where reference is made to the Standard Specifications for Public Works Construction, the terms "Agency" and "Engineer" used in the referenced section(s) therein shall mean "Calleguas," and the measurement and payment provisions shall not apply.

"Subcontractor" shall mean any person or entity performing work or providing materials or labor or rendering service under a direct contract with the Contractor or with any of the Contractor's Subcontractors in or about the construction of the Work.

"Supplier" shall mean any person or entity providing materials under a direct contract or agreement with the Contractor or with any of the Contractor's Subcontractors in or about the construction of the Work.

The **"Time for Completion"** is the number of Calendar Days set forth in the Specifications for the Contractor to complete all or any designated portion of the Work called for under the Contract in all parts and requirements. The Time for Completion of all Work under the Contract shall start on the date of the Notice to Proceed. The Times for Completion of designated portions of the Work shall start as set forth elsewhere in the Contract Documents. There may be more than one Time for Completion for various phases or portions of the Work to be performed under the Contract, and there may be liquidated damages associated with each Time for Completion, as specified in the Special Conditions.

"Work" shall mean the entire completed construction required to be furnished under the Contract Documents. Work is the result of performing services, furnishing labor, and furnishing and incorporating materials and equipment into the construction, all as required by the Contract Documents.

A **"Working Day"** is a 24-hour period, from midnight to midnight Monday through Friday excluding holidays observed by Calleguas.

1.8. Calleguas Personnel and Authority.

1.8.1. Board of Directors. The Calleguas Board of Directors (the "Calleguas Board") has complete authority for the Work within the limits prescribed by law. The authority to perform certain functions has been delegated to Calleguas employees and consultants. The following is a list of personnel and designated duties.

1.8.2. Project Manager. The Project Manager is the representative of Calleguas for purposes of administering the Contract. All notices to Calleguas and all written correspondence to Calleguas shall be addressed to the attention of the Project Manager as set forth in Section 1.2.2.

1.8.3. Construction Inspector. One or more Construction Inspectors will be assigned to the Work by Calleguas. The Construction Inspector has the following authority, subject to review by the Project Manager:

(1) To view and inspect the Work, sample and test components (at the job site and at off-site manufacturing facilities), and to discuss the Work with the Contractor's authorized field representative; and

(2) To determine compliance with the Drawings and Specifications and other Contract Documents, to sign Calleguas' Daily Work Reports, and to issue Field Orders, Work Change Directives, warnings of noncompliance, Stop Work Notices, and other correspondence.

1.8.4. Materials Inspector. One or more Materials Inspectors may be assigned to the Work by Calleguas. The Materials Inspector has the following authority, subject to review by the Project Manager:

(1) To view and inspect the Work, sample and test components (at the job site and at off-site manufacturing facilities), and to furnish available written test results to the Contractor's authorized field representative; and

(2) To determine compliance with the Contract Documents and to issue written notification of noncompliance with the Contract Documents.

1.8.5. Engineer. The Engineer prepares the Drawings and Specifications for the Work and has the responsibility for review and approval of submittals and Shop Drawings, responding to Requests for Clarification/Interpretation of the Drawings and Specifications from the Contractor.

1.8.6. Surveyors. Surveyors hired by Calleguas shall have free access to the site to perform their duties, but have no authority related to Contract administration.

1.8.7. Other Persons. Visitors or Calleguas personnel who are not involved in construction administration may be present at the site. Such persons have no authority under the Contract, and Calleguas is not responsible for their comments, suggestions or directions.

1.8.8. Authority of Calleguas. Calleguas or, at Calleguas' request, the Engineer, shall interpret all orders and directions contemplated under the Contract; shall determine all questions in relation to the Work and the construction thereof; and shall decide in all cases every question which may arise relative to the fulfillment of this Contract on the part of the Contractor. Should any discrepancy appear or any misunderstanding arise as to the import of anything contained in the Contract Documents, the matter shall be referred to Calleguas, who shall decide the matter in accordance with the true intent and meaning as construed by Calleguas, and Calleguas' decision shall be binding on the Contractor. Any differences or conflicts that may arise between the Contractor and other contractors of Calleguas in regard to their Work shall be adjusted and determined by Calleguas or by the Engineer at Calleguas' direction.

1.9. Contractor's Personnel and Authority.

1.9.1. The Contractor's Representatives.

1.9.1.1. The Contractor's Project Manager. The Contractor's Project Manager is the representative of the Contractor for the purpose of administering the Contract.

1.9.1.2. Contractor's Superintendent. The Contractor's Superintendent is the Contractor's field representative who has authority to act on behalf of the Contractor. The Superintendent provides general supervision of the Contractor's field activities.

1.9.2. Contractor's Representative to Give Personal Attention. The Contractor, either in person or by a duly authorized and competent representative, shall give personal attention constantly to the faithful prosecution of the Work, and shall be present on the site of the Work continually during its progress, to receive directions or instructions from Calleguas. Before starting the Work, the Contractor shall designate, in writing, a field representative, denominated the Superintendent, who shall have complete authority to act for it. An alternate Superintendent may also be designated. The alternate Superintendent must meet the same experience requirements specified for the Superintendent in the Notice Inviting Bids. The Superintendent or alternate shall be present at the worksite whenever the Work is in progress or whenever actions of the elements necessitate the taking of measures necessary to protect the Work, persons, or public or private property. Any order or communication given to the Superintendent shall be deemed delivered to the Contractor. A joint venture shall designate only one Superintendent and alternate. In the absence of the Contractor or its Superintendent, necessary or desirable directions or instructions may be given by Calleguas to the Contractor's Project Manager, or to the person having charge of the specific work to which the order applies. Such orders shall be complied with promptly. In order to communicate with Calleguas, the Contractor's Superintendent and any persons having charge of specific work shall be able to speak, read and write the English language.

1.9.3. Replacement of Project Manager/Project Superintendent. Neither the Contractor's Superintendent nor the Contractor's Project Manager shall be replaced without a reasonable basis and written notice to Calleguas. The Contractor must supply to Calleguas evidence that any replacement Superintendent or Project Manager meets the experience and qualification requirements of these Contract Documents. No Project Manager or Superintendent may be employed on the Work until Calleguas has received references which meet with Calleguas' approval.

1.9.4. Notices to the Contractor. The Contractor may be given notice by mail, personal service or facsimile.

1.9.4.1. Service by Mail. If the notice is to be by mail, the address given in the Contractor's Bid is hereby designated as the place to which all notices, letters and other communications to the Contractor shall be mailed. The delivering at the above named place, or the depositing in a pre-paid envelope directed to the above place, in any post office mail box regularly maintained by the post office or any depository of Federal Express, United Parcel Service or other courier, of any notice, letter or other communication to the Contractor, shall be deemed sufficient service thereof upon the Contractor and the date of said service shall be the date of such delivery or mailing. Such address may be changed at any time by a written notice signed by the Contractor and delivered to Calleguas.

1.9.4.2. Personal Service or Service by Fax or E-Mail. The service of any notice, letter, or other communication upon the Contractor personally or upon the Contractor's Project Manager or Superintendent personally, shall be deemed sufficient service thereof upon the Contractor and the date of such service shall be the date served. Service by facsimile or e-mail to the fax number or e-mail address, respectively, provided by the Contractor pursuant to Section 1.9.4.3, addressed to the Contractor's Project Manager or Superintendent, shall also be deemed sufficient service upon the Contractor, and the date of said service shall be the date of such facsimile or e-mail.

1.9.4.3. Contractor's Phone and Fax Numbers and E-mail Address. Before starting the Work, the Contractor shall provide Calleguas with a telephone number, a facsimile number, and an e-mail address where a duly authorized and competent representative of the Contractor can be reached during normal work hours. In addition, the Contractor shall provide Calleguas with telephone numbers where the Superintendent and Project Manager can be reached at any hour of the day or night.

1.9.4.4. One Hour Response Required for Emergencies. The Contractor or its duly authorized and competent representative must respond, in person, or by telephone, within one (1) hour of any emergency call placed by Calleguas. If Calleguas does not receive a response to an emergency call within one hour, or if the circumstances otherwise warrant, then Calleguas may, at its option, take any necessary action to remedy the emergency condition. In all cases where the Contractor is obligated or responsible for the emergency condition or for responding to the emergency condition, Calleguas' response shall be at the Contractor's expense. Such expenses shall be deducted from amounts due or to become due to the Contractor under or by virtue of this Contract. In case the expense exceeds the amount due, the Contractor shall pay the amount of any excess to Calleguas.

1.10. Specification Language and Style

1.10.1. Parts of the Specifications and notes on the Drawings are written in the active voice and are addressed to the Contractor.

1.10.1.1. When words or phrases requiring an action or performance of a task are used, it means that the Contractor shall provide the action or perform the task. For example: provide, perform, install furnish, erect, connect, test, operate, adjust, or similar words mean that the Contractor shall perform the referred-to action or task.

1.10.1.2. When words or phrases requiring selection, acceptance, approval, review, designation or similar actions are referred to, it means that such actions are Calleguas' or the Engineer's prerogative and that the Contractor must obtain such action before proceeding.

1.10.2. Requirements in the Specifications and Drawings apply to all work of a similar type, kind, or class even though the word "all" or "typical" may not be stated.

2. TIME AND ORDER OF THE WORK.

2.1. Time Is of the Essence. The Times for Completion and Fixed Calendar Dates contained in the Contract Documents are not mere guidelines. The time in which the various portions and the whole of the Contract are to be performed, and the Work is to be completed is of the essence of the Contract. A breach due to failure by the Contractor to comply with the Times for Completion or Fixed Calendar Dates is a material breach of the terms of the Contract.

2.1.1. Notice to Proceed is Authorization to Begin Work. The issuance of a Notice to Proceed by Calleguas shall constitute the Contractor's authority to perform the Work. The period within which the Contractor must complete the Work (the Time for Completion) begins running on the date set forth in the Notice to Proceed.

2.1.2. Contractor Responsible for Means and Methods. The Contractor shall be solely and completely responsible for and have control over construction means, methods, techniques, sequences, procedures and safety and for coordinating all portions of the Work under the Contract Documents.

2.1.3. The Contractor Must Maintain the Required Progress. The Contractor shall at all times employ such work forces, plant, materials, equipment and tools as will be sufficient, in the opinion of Calleguas, to prosecute the Work at not less than the rates fixed under the terms of the Contract and to complete the Work or any separable portions thereof within the time limits fixed by the Contract. If the Contractor fails to employ sufficient work forces, plant, materials and tools or to maintain adequate progress the Contractor may, after such failure, be required to increase progress at any point or points or to modify plans and procedures in such manner and to such extent as Calleguas may direct, at the Contractor's expense, or Calleguas may instruct the Contractor to discontinue the Work in accordance with Section 7 of these General Conditions entitled "Discontinuance or Termination of the Work."

2.2. Liquidated Damages - Failure to Complete on Time. It is agreed by the parties to the Contract that in case the Work called for under the Contract Documents in all parts and requirements is not completed within the Time(s) for Completion and/or by the Fixed Calendar Date(s) set forth in the Specifications or as amended by Change Order, damages will be sustained by Calleguas. It is also agreed by the parties that it is and will be impracticable and extremely difficult to ascertain and determine the actual damage Calleguas will sustain in the event of, and by reason of, such failure to timely complete the Work. Therefore, the Contractor shall pay for each and every Calendar Day that the Contractor shall be in default of completing the Work to be done under this Contract, or any separable part thereof, the sum or sums named in the Specifications, which sum or sums are by the

execution of the Contract mutually agreed upon, not as a penalty, but as liquidated damages which Calleguas will suffer by reason of such failure to complete the Work, or part thereof. Calleguas shall have the right to deduct the amount of such liquidated damages from any monies due or to become due the Contractor under this Contract. Permitting the Contractor to continue the Work and finish the Work, or any part of it, after the Time for Completion or the Fixed Calendar Date or the date to which the Time for Completion may have been extended, shall in no way operate as a waiver of liquidated damages nor as a waiver of any of Calleguas' rights under this Contract.

2.2.1. Documentation is an Essential Element of the Work. The furnishing of documents and information, such as Record Drawings, Record Layout Sheets, Record Electrical and Instrumentation Documentation, AutoCAD or other electronic or digital files, software such as PLC programs, and operations and maintenance manuals, is not a minor informality as such items are necessary for Calleguas to properly, safely and fully utilize its facilities. Therefore, the accrual of liquidated damages shall stop when the Contractor has completed all the construction and other work required to be furnished under the Contract Documents, including all field work, including all punch list items, and furnished all documents and information required by the Contract Documents, including but not limited to, as applicable, Record Drawings, Record Layout Sheets, Record Electrical and Instrumentation Documentation, AutoCAD or other electronic or digital files, software such as PLC programs, and operations and maintenance manuals.

2.2.2. Determining Whether the Work is Complete. Except as to liquidated damages calculations, the Contractor shall be considered to have completed the Work when the Contractor has completed all the construction and other work required to be furnished under the Contract Documents, including all field work, and has furnished all documents, information and other deliverables, including, but not limited to, Record Drawings, Record Layout Sheets, Record Electrical and Instrumentation Documentation, AutoCAD or other electronic or digital files, software such as PLC programs, operations and maintenance manuals, warranties, and releases (except the Release on Contract required by General Conditions Section 6.4.3).

2.3. Delays.

2.3.1. Timely Completion of Work Required. The Contractor shall complete all or any designated portion of the Work called for under the Contract in all parts and requirements within the Time(s) for Completion and by the Fixed Calendar Date(s). If the Contractor is delayed in one part of the Work, then the Contractor must take all steps necessary to mitigate costs and delays which can be avoided by the judicious handling of work forces, construction equipment and plant, including, but not limited to, shifting such forces, equipment, and plant to other parts of the Work. If the Contractor is delayed in prosecution and completion of the Work by any cause beyond his control (including as a result of any action or inaction by Calleguas) the Contractor hereby agrees that the Contractor has no claim or right of any action whatsoever for damages from Calleguas for any such cause or delay, except as set forth in Section 2.3. Delay as the term is used in this Section 2.3, refers to events that impact the Current Controlling Operation by either extending the time of performance or disrupting the performance of the Work in some way that impacts the efficiency of the Contractor's performance whether or not it extends the time of performance.

2.3.2. No Payment or Extension of Time.

2.3.2.1. The Contractor shall not be relieved from the necessity of maintaining the required progress and shall not be entitled to any additional compensation nor to an adjustment in any Time for Completion or Fixed Calendar Date for the following types of delays to the Work:

(1) A suspended or delayed activity that is not the Current Controlling Operation;

(2) Suspensions or delays due to the failure of the Contractor or the Contractor's Subcontractors or materials suppliers to carry out Calleguas' orders or to perform any provisions of the Contract;

(3) Suspension or delays resulting from the Contractor's noncompliance with the Contract;

(4) Ordinary and/or foreseeable delays and accidents;

(5) Delays that are reasonable under the circumstances and/or were within the contemplation of the parties when the Contract was awarded, including but not limited to, delays associated with reasonable time for the Engineer or Calleguas to review and respond to RFI/RFCs and other types of Contractor submittals;

(6) Delays caused by events over which the Contractor has control or assumed responsibility, including, but not limited to, delay caused by the acts or omissions of Subcontractors of any tier; and

(7) Delays occurring after any Time for Completion or beyond a Fixed Calendar Date on which the Contractor was to have completed all work, after taking into account any awarded extensions or adjustments to the Time for Completion or Fixed Calendar Date.

2.3.2.2 The Contractor acknowledges and agrees that Calleguas is exempt from any and all liability for early completion delay damages and all claims related thereto. In furtherance of such exemption, Contractor irrevocably and unconditionally waives any and all rights to request early completion delay damages with respect to the Work.

2.3.3. Materials and Equipment Must Be Ordered Timely. All materials and equipment to be furnished by the Contractor for incorporation into the Work shall be ordered promptly to avoid delays. The Contractor shall not be entitled to any additional compensation or to an adjustment in any Time for Completion or Fixed Calendar Date for delays resulting from delay of delivery of materials and equipment.

2.3.4. Suspension of the Work by Calleguas. By written order to the Contractor, Calleguas may suspend the Work wholly or in part, for an indefinite period or for such period as it may deem necessary, for any of the following reasons:

(1) Weather conditions that are unfavorable for the prosecution of the Work;

(2) Failure of the Contractor to carry out orders given or to perform any provisions of the Contract; and

(3) The convenience or benefit of Calleguas.

Suspension by Calleguas shall be effective upon receipt by the Contractor of the written order suspending the Work and shall be terminated upon receipt by the Contractor of the written order terminating the suspension. Except as otherwise specified in this Section 2.3 Calleguas shall not be liable to the Contractor for any suspension of the Work.

2.3.5. Suspension or Delay of the Work Due to Weather Conditions. In making its Bid, the Contractor must consider the probability that the Work may be delayed or suspended due to weather conditions that are unfavorable for the prosecution of the Work and the Contractor shall be deemed to have accounted for that probability in the Bid. For all portions of the Work for which a Fixed Calendar Date is indicated, if such Work is suspended by Calleguas or the Contractor due to weather conditions that are unfavorable for the prosecution of the Work, the Contractor remains obligated to timely complete such work and shall **not** receive a time extension or additional payment. For Work for which no Fixed Calendar Date is indicated, subject to compliance with Section 2.3.10, the Time for Completion may be extended by one Calendar Day for each Calendar Day the Current Controlling Operation is suspended because of weather conditions which are unfavorable for the prosecution of the Work; however, there shall be no additional compensation for delays due to weather conditions. When the Contractor is late in completing the Work and the prosecution of the Work extends beyond the Time for Completion, there shall be no extension of the Time for Completion nor any adjustment to any Fixed Calendar Date(s) due to weather conditions, nor shall there be any additional compensation for delays due to weather conditions occurring beyond the completion date of the Contract.

2.3.5.1. Regular Starting Time. Should the Contractor prepare to begin work at the regular starting time at the beginning of any regular work shift on any Calendar Day on which inclement weather, or the conditions resulting from the weather, which in the judgment of Calleguas, prevents the work on the Current Controlling Operation from beginning at the usual starting time and the crew is dismissed as a result thereof, the Time for Completion may be extended by one Calendar Day, whether or not conditions change thereafter and the major portion of the Calendar Day could be considered to be suitable for such construction operations.

2.3.6. Suspension or Delay of the Work Due to Contractor's Actions. For all work suspended or otherwise delayed in whole or in part due to failure of the Contractor to carry out orders given by Calleguas or to perform any provisions of the Contract Documents, the Contractor remains obligated to timely complete such work without a time extension or additional compensation.

2.3.7. Suspension of the Work for the Convenience or Benefit of Calleguas. In the event of suspension of the Current Controlling Operation by Calleguas for its convenience or benefit, for all work for which a Fixed Calendar Date is indicated, the Contractor remains obligated to timely complete such work. Calleguas and the Contractor will negotiate, however, appropriate means and compensation for completing the Work by the Fixed Calendar Date. For work for which no Fixed Calendar Date is indicated, the Time for Completion may be extended by one Calendar Day for each

Calendar Day the Current Controlling Operation is suspended for the convenience or benefit of Calleguas, and the Contractor may be entitled to payment of costs actually incurred, subject to compliance with Section 2.3.10 hereof. The sole costs to which the Contractor may be entitled are the following:

(1) Those actual necessary costs of idle time of construction equipment, idle time of workers, moving of construction equipment and hauling of materials and equipment which are actually incurred solely by reason of the delay and which could not have been avoided by the judicious handling of work forces, construction equipment and plant, with allowance for overhead and profit no higher than as provided in the section of the General Conditions entitled "Payment for Extra Work"; and

(2) Costs incurred, with the written approval of Calleguas, to mitigate the foregoing costs, with allowance for overhead and profit no higher than as provided in the section of the General Conditions entitled "Payment for Extra Work."

2.3.8. Delays Due to the Unreasonable Acts or Omission of Calleguas. An act or omission on the part of Calleguas which delays a Current Controlling Operation and which is unreasonable under the circumstances involved, and not within the contemplation of the parties or the Contract, shall be treated as a suspension of the Work for the convenience or benefit of Calleguas, subject to the Contractor's compliance with Section 2.3.10. Failure of Calleguas to furnish within Contract time requirements: access to the Work, right-of-way, Drawings, materials, or equipment for which Calleguas is responsible under the Contract, if such failure delays a Current Controlling Operation, shall be treated as a suspension of the Work for the convenience or benefit of Calleguas, subject to compliance with Section 2.3.10.

2.3.9. Delays Due to Force Majeure. Actual and demonstrable delay to the Current Controlling Operation due to Acts of God or other Force Majeure beyond the control or responsibility of Calleguas or the Contractor, including acts of the public enemy, fire, floods, epidemics, quarantine restrictions, industry wide labor disputes, sabotage or freight embargoes, shall be treated as follows:

2.3.9.1. For all Work for which a Fixed Calendar Date is indicated, if a Current Controlling Operation is delayed due to an Act of God or Force Majeure, except as expressly limited by Public Contract Code Section 7105, the Contractor remains obligated to timely complete such work and shall not receive a time extension or additional compensation, except that the Contractor might be eligible for additional compensation for acceleration of the Work, subject to the delay, notification, claims, and other applicable provisions of the Contract Documents.

2.3.9.2. For Work for which no Fixed Calendar Date is indicated, subject to compliance with Section 2.3.10, the Time for Completion may be extended by one Calendar Day for each Calendar Day the Current Controlling Operation is suspended because of Acts of God or other Force Majeure; however, there shall be no additional compensation for delays due to Acts of God or Force Majeure.

2.3.9.3. The Time for Completion shall not be extended for delays to operations that are not the Current Controlling Operation.

2.3.10. Procedure to Apply for Extension of Time and/or Payment Due to Delay.

2.3.10.1. Notice Required Within One Working Day. Within one (1) Working Day of any delay of a portion of the Work which is the Current Controlling Operation, whether such delay is caused by Calleguas, by weather, or otherwise, the Contractor shall notify Calleguas in writing of the delay to the Current Controlling Operation, and shall provide all evidence in the Contractor's possession concerning the cause(s) of delay. Written notice of delay to the Current Controlling Operation is not a mere formality but is Calleguas' tool for identifying and distinguishing critical from non-critical delays and for determining what action, if any, is necessary on its part. The Contractor shall not assume that written or actual notice on the part of Calleguas of a disruptive event constitutes knowledge of a delay to the Current Controlling Operation. Calleguas shall not assume that there has been a delay to a Current Controlling Operation absent written notice from the Contractor. If the Contractor fails to provide notice within twenty-four hours, then the Contractor shall not receive any extension of time or payment for that portion of the delay to the Current Controlling Operation that is outside the twenty-four hour notice period.

2.3.10.2. Daily Work Reports Required to Recover Costs. If the Contractor wishes to recover costs associated with a delay or suspension of the Current Controlling Operation, and such recovery of costs is authorized under the Contract Documents, then the Contractor shall maintain and submit to Calleguas complete and accurate Daily Work Reports enumerating all such costs, clearly distinguishing them from the costs of other portions of the Work. The Daily Work Reports shall:

(1) Show names of workers, classifications and hours worked;

(2) Describe and list quantities of materials used;

(3) Show type of equipment, size, and hours of operation, including loading and transportation if applicable; and

(4) Describe other services and expenditures in such detail as Calleguas may require.

The Contractor shall attempt to reconcile the reports with Calleguas daily, and the Daily Work Report shall be signed by Calleguas and the Contractor. Failure to submit the Daily Work Report by the close of the next work day may waive any right to recovery of costs for that Calendar Day. In the event of disagreement, pertinent notes shall be entered by each party to explain points that cannot be resolved immediately. Each party shall retain a signed copy of the Daily Work Report. Work performed by Subcontractors shall be reported on the Daily Work Report. As soon as practicable, following receipt of such Daily Work Report(s), if required, Calleguas will determine the nature and extent of such costs and will, if it finds that payment is due, issue a Change Order therefore. If Calleguas determines that payment is not due, it will so advise the Contractor in writing. Any disputes regarding payment of costs shall then proceed in accordance with the procedures set forth in the General Conditions section entitled "Protests and Claims."

Except for the additional compensation provided in Section 2.3.7 hereof, neither the Contractor nor any Subcontractor of any tier shall have any claim for damages or compensation for delay. Except as set forth in Sections 2.3.7, 2.3.8 and 5.4.2, neither the Contractor nor any Subcontractor of any tier

shall receive compensation for any other type of delay or hindrance to the Work, whether caused by Calleguas, a third party or otherwise.

2.3.10.3. Time Extensions. Within ten (10) Calendar Days after the end of each month, Calleguas will furnish the Contractor a statement showing the original Time(s) for Completion, any time adjustments granted after receipt of the required notice by the Contractor, the number of Calendar Days elapsed, and the number of Calendar Days remaining for completion of the Contract. The Contractor shall file a written protest setting forth in what respects the Contractor differs from Calleguas within fifteen (15) Calendar Days from the issuance of the monthly statement. No protest shall be allowed for any period of time for which notice within one Working Day, as required by Section 2.3.10.1, was not provided. If no written protest is filed within fifteen (15) Calendar Days of the date of the statement, the decision of Calleguas shall be deemed to have been accepted by the Contractor as correct, and no further delay claims for the period covered by the statement will be allowed or considered.

2.3.10.4. Revised Schedule of Progress. In case of any extension by Calleguas of any Time for Completion, a revised schedule of progress may be required and shall be provided to Calleguas by the Contractor upon request.

3. CHANGES TO THE WORK.

3.1. Changes by Calleguas. If Calleguas finds it impracticable to comply strictly with the Contract Documents, or finds it necessary to make a change in the Work, Calleguas may prescribe a modification of requirements or of methods of Work; and, for such purposes Calleguas may, at any time during the life of the Contract, by written order, make such changes as it shall find necessary in the design, line, grade, form, location, dimension, plan or material of any part of the Work or equipment, or in the quantity or character of the Work or equipment to be furnished. Such changes shall be made by Field Order or Work Change Directive. Changes to the Work by Calleguas are within the contemplation of the parties, even if large in value or numerous. In the event of changes to the Work or addition of Extra Work, the Contractor shall be required to obtain any necessary additional performance bonds or payments bonds at Calleguas' option.

3.1.1. Field Orders. "Field Orders" are written instructions, or verbal instructions confirmed in writing, provided by Calleguas' Project Manager or Construction Inspector to the Contractor which involve minor changes in Work but do not involve a change in Contract Amount, Bid Schedule price(s), extension of Time(s) for Completion or adjustment of Fixed Calendar Date(s). If the Contractor believes that a Field Order should constitute Extra Work, the Contractor must, within one (1) Working Day of receipt of the Field Order, submit a request for an extension of time and/or payment for Extra Work in strict accordance with this Section 3. Failure to timely submit such a request constitutes the Contractor's agreement that no Extra Work is warranted.

3.1.2. Work Change Directives. Work Change Directives will be issued by Calleguas' Project Manager or Construction Inspector in writing. Work Change Directives will involve an addition, deletion or revision to the Contractor's scope of Work. The directive itself will not change the Contract Amount, Time(s) for Completion, or Fixed Calendar Date(s), but will serve as evidence to all parties that the addition, deletion or revision to the scope of Work may be incorporated into a

Change Order following negotiation as to its effect. At Calleguas' discretion, Work Change Directives may be handled on a time and materials basis or on a fixed price basis.

3.1.3. Change Orders. A Change Order is a document which is signed by the Contractor and Calleguas and which authorizes an addition, deletion or revision to the Work, an adjustment in the Contract Amount and/or the Time(s) for Completion, issued on or after the effective date of the Contract. The Change Order shall be fully executed by both the Contractor and Calleguas prior to payment to the Contractor for work performed under the Change Order. The Change Order shall be executed by the Contractor in the same manner as the original Contract. All Change Orders to the Contract, amongst other things, operate to waive any further claim by the Contractor related to the Work for which the Change Order is issued. All Change Orders shall include the following language, which is binding upon the Contractor and the Contractor's Subcontractors and suppliers:

"The compensation (time and cost) set forth in the Change Order comprises the total compensation due the Contractor, all Subcontractors, and all Suppliers, for the work or change defined in the Change Order, including any impact on unchanged work. By signing the Change Order, the Contractor acknowledges and agrees on behalf of himself, all Subcontractors and all Suppliers, that the stipulated compensation includes payment for all work contained in the Change Order, plus all payment for the interruption of schedules, extended field overhead cost, delay, and all impact, ripple effect or cumulative impact on all other work under the Contract and all other extraordinary or consequential costs arising directly or indirectly out of the work described in the change order. The signing of the Change Order indicates that the Change Order constitutes full mutual accord and satisfaction for the change, and that the time and cost under the Change Order constitutes the total equitable adjustment owed the Contractor, all Subcontractors, and all Suppliers as a result of the change. The Contractor on the Contractor's behalf and on behalf of all Subcontractors and Suppliers agrees to waive all rights, without exception or reservation of any kind whatsoever, to file any further claim related to the Change Order. No further claim or request for equitable adjustment of any type, for any reasonably foreseeable cause, shall arise out of or as a result of this Change Order or the impact of this Change Order on the remainder of the work under this Contract."

3.2. Procedure to Apply for Extension of Time and/or Payment for Changes to Work or Extra Work. In the event of additions, deletions or revisions to the Work requiring an adjustment in the Contract Amount and/or any Time for Completion of the Work, Calleguas may, at its discretion, either request and negotiate an adjustment in the Contract Amount from the Contractor or direct the Contractor to perform the revised or added work on a time and materials basis. If the Contractor wishes to perform the work for a negotiated adjustment in the Contract Amount, then the Contractor must make its proposal before the work commences or within fifteen (15) Calendar Days of the Work Change Directive, whichever is sooner. If the Contractor believes that a proposed addition, deletion or revision in the Work requires an adjustment in any Time for Completion, then the Contractor must provide written notice to Calleguas within fifteen (15) Calendar Days of receipt of a Work Change Directive or before the Work commences, whichever is sooner. If the Contractor believes that a proposed addition, deletion or revision in the Work requires an adjustment in the Contract Amount in order to accelerate work to meet a Fixed Calendar Date or will prevent the Contractor from meeting a Fixed Calendar Date, then the Contractor must provide written notice within one (1) Working Day of receipt of a Field Order or Work Change Directive. If the Contractor submits a timely request for payment and/or time adjustment, but Calleguas and the Contractor are unable to agree on the value of

increased, decreased or Extra Work or on a time extension, then such Work shall be paid in accordance with the provisions of Sections 3.3 and 3.4. Disputes over time extensions shall proceed in accordance with the procedures set forth in the section of these General Conditions entitled "Protests and Claims." The Contractor shall not be excused from any Fixed Calendar Date or any Time for Completion and shall proceed with the Field Order, or Work Change Directive and all other Work to be performed under the Contract.

3.3. Payment for Increases and Decreases to Bid Items - Applicable Rules.

3.3.1. Decreases in Bid Items. If the amount of work decreases, the total amount of work actually done or materials or equipment furnished shall be paid for according to the unit price established for such Work under the Contract, wherever such unit price has been established. Calleguas reserves the right to omit portions, or all, of such Work as may be deemed necessary or expedient by Calleguas without a change in the unit price. If a part of the Work is entirely eliminated and no unit price is named in the Contract to cover such eliminated Work, Calleguas shall fix the cost of the eliminated Work based upon estimates of decreased labor and material costs to be incurred by the Contractor. Allowances for overhead and profit will be added to the cost of the eliminated Work, in accordance with the overhead and profit allowances contained in the section of these General Conditions entitled "Time and Materials Work." The sum of the cost of the eliminated work plus the allowances for overhead and profit will be the amount to be deducted from the Contract Amount as a credit to Calleguas for the eliminated work. A change which diminishes the quantity or amount of work to be done shall not constitute the basis for a claim by the Contractor for damages or anticipated profits on the work that may be dispensed with provided that if such changes or alterations render useless any work already done or materials already furnished or used in the Work, Calleguas shall make reasonable allowance therefore, as set forth herein.

3.3.2. Increases in Bid Items. In the event of an increase in the amount of work, the total amount of work actually done or materials or equipment furnished shall be paid for according to the unit price established for such work under the Contract, wherever such unit price has been established. Calleguas reserves the right to increase the quantity of any unit-price item of the Work by an amount up to and including twenty-five percent (25%) of the original Bid item(s) without a change in the unit price. In the event Calleguas increase the quantity of any unit-price item of the Work by an amount which exceeds twenty-five percent (25%) of the original Bid item(s) [hereinafter the "excess amount"], the Contractor shall notify Calleguas in writing before performing the work that the increase in the quantity of such unit price item will materially increase the Contractor's unit cost. If Calleguas determines that a material increase in the unit cost has occurred, then the unit price on the excess amount shall be paid as hereinafter provided for in the section below entitled "Time and Materials Work." If the Contractor does not provide written notification before performing the work, or if in the opinion of Calleguas, the increase in the quantity of the unit price item did not result in a materially increased unit cost, then all of the work shall be paid according to the unit price established for such work under this Contract. In the event no unit prices are named in the Contract to cover an increase or alteration in the Work, the cost of such changes shall be covered as hereinafter provided for in the section below entitled "Time and Materials Work."

3.4. Payment for Extra Work.

3.4.1. Contractor to Perform Ordered Extra Work. If during the performance of the Contract it shall, in the opinion of Calleguas, become necessary or desirable for the proper completion of the Contract to order that Extra Work be performed, , the Contractor shall do and perform such Work and furnish such labor, materials, and/or equipment. "Extra Work" shall be ordered in writing by Calleguas before such work is started.

3.4.2. Extra Work Must Be Ordered in Writing. No Extra Work shall be paid for unless ordered in writing by Calleguas.

3.4.3. Payment Normally to Be Agreed in Advance. Extra Work and material will ordinarily be paid for at a lump sum or unit price agreed to in writing by Calleguas and the Contractor before the Extra Work shall be performed. In the negotiation of lump sum or unit prices, the agreed estimated cost of the work plus an allowance for overhead and profit, not to exceed the allowances in Section 3.4.6 below, shall be used.

3.4.4. Option to Use Time and Materials. At the option of Calleguas, payment may be made on the basis of time and materials as set forth in Section 3.4.6.

3.4.5. Work Comparable to Unit Price Items. Performance of any Extra Work or the furnishing of any extra material which, in the judgment of Calleguas, is of like character to and susceptible to classification under the unit-price items of the Contract shall, if directed by Calleguas, be paid for at the unit price named for such Work in the Bid Schedule.

3.4.6. Time and Materials Work. Extra Work and work involving a combination of increases and decreases in the Work ordered on the basis of time and materials will be paid for at the actual necessary cost as determined by Calleguas, plus allowances for overhead and profit. For work involving a combination of increases and decreases in the Work, the actual necessary cost will be the arithmetic sum of the additive and deductive costs. The allowance for overhead and profit shall be deemed to include full compensation for project management, superintendence, bond and insurance premiums, taxes (other than sales or use taxes includible in the cost of materials), office expense, and all other items of expense or cost not included in the cost of labor, materials, or equipment provided for under Sections 3.4.7, 3.4.8, 3.4.9, and 3.4.10 hereof. The allowance for overhead and profit will be made in accordance with the following schedule.

OVERHEAD AND PROFIT ALLOWANCE

Labor	-	20 percent
Materials	-	15 percent
Equipment	-	15 percent

The actual necessary costs for labor, materials, or equipment will be computed in accordance with Sections 3.4.7, 3.4.8, 3.4.9, and 3.4.10, respectively, hereof. Superintendence, bond and insurance premiums, taxes (other than sales or use taxes includible in the cost of materials), and other general expenses shall not be included in the computation of actual necessary cost as they are deemed included

in the overhead and profit allowance. It is understood that labor, materials, and equipment may be furnished by the Contractor or by the Subcontractor on behalf of the Contractor. When all or any part of the Extra Work is performed by a Subcontractor, the overhead and profit allowance shall be applied to the labor, materials, and equipment costs of the Subcontractor, to which the Contractor may add ten percent (10%) for the first five thousand dollars ($5,000.00) and five percent (5%) to the Subcontractor's remaining total for the Extra Work. Regardless of the number of hierarchical tiers of Subcontractors, ten percent (10%) for the first five thousand dollars ($5,000.00) and five percent (5%) above the Subcontractor's remaining total may be applied one (1) time only for each separate Extra Work transaction. The Contractor shall furnish Calleguas Daily Work Reports covering the direct costs of labor and materials and charges for equipment, whether furnished by the Contractor, Subcontractor, or other forces. The reports shall be furnished on Daily Work Report forms provided by Calleguas and shall be signed by the Contractor or the Contractor's authorized agent and by Calleguas' Construction Inspector or Project Manager; forms not signed by Calleguas' Construction Inspector or Project Manager shall be void, and any work or costs on an unsigned Daily Work Report shall be invalid and will not be allowed or paid for as Extra Work. On the Daily Work Reports, the Contractor shall provide names or the identifications and classifications of workers, and hours worked; size and type of equipment, and hours operated; and materials used in performing the work. Material charges shall be substantiated by valid copies of vendor's invoices; Calleguas will not pay for materials for which valid invoices are not provided. All charges shall be substantiated by such other data as Calleguas may require. Calleguas will make any necessary adjustments and compile the costs of time and materials work. When these reports are agreed upon and signed by both parties, they shall become the basis of payment for the Extra Work performed, but shall not preclude subsequent adjustment based on a later audit. Calleguas' signature on the Daily Work Report does not constitute an acknowledgement of the validity of any claim by the Contractor that work is Extra Work, or that the Contractor is entitled to the amounts stated therein or any amount at all, but only acknowledges receipt of back up information for the Contractor's potential claim. In the event of any inconsistency between the allowances for profit and overhead or other mark-ups stated on the Daily Work Report and these General Conditions, the values stated in these General Conditions shall govern and shall be used.

3.4.7. Labor. The cost of labor used in performing the Extra Work by the Contractor, a Subcontractor, and/or other forces will be the sum of the following:

(1) The actual wages paid plus any employer payments to, or on behalf of, workers for fringe benefits, including health and welfare, pension, vacation, and similar purposes. The cost of labor may include the wages paid to foremen when it is determined by Calleguas that the services of foremen do not constitute a part of the superintendent component of the overhead allowance.

(2) All payment imposed by state and federal laws including, but not limited to, worker's compensation insurance and social security payments.

(3) The amount paid for subsistence and travel required by collective bargaining agreements, or in accordance with the regular practice of the Contractor, only in the event an adjustment in Time(s) for Completion is granted.

At the beginning of the Contract and as later requested by Calleguas, the Contractor shall furnish Calleguas proof of labor compensation rates being paid or that have been paid.

3.4.8. Materials. The cost of materials used in performing the work will be the cost to the purchaser, whether the Contractor, Subcontractor or other forces, from the supplier thereof, inclusive of sales or use taxes, except as the following are applicable:

(1) Cash or trade discounts available to purchaser shall be credited to Calleguas notwithstanding the fact that such discounts may not have been taken by the Contractor.

(2) In materials secured by other than a direct purchase and direct billing to the purchaser, the cost shall be deemed to be the price paid to the actual supplier as determined by Calleguas. Markup, except for actual costs incurred in the handling of such materials, will not be allowed.

(3) Payment for materials from sources owned wholly or in part by the purchaser shall not exceed the price paid by the purchaser for similar materials from said sources on Contract items or the current wholesale price for such materials delivered to the jobsite, whichever price is lower.

(4) If, in the opinion of Calleguas, the cost of materials is excessive, or the Contractor does not furnish satisfactory evidence of the cost of such materials, then the cost shall be deemed to be the lowest current wholesale price for the quantity concerned delivered to the jobsite less cash or trade discount. Calleguas reserves the right to furnish materials for the Work and no claim shall be made by the Contractor for costs or profit on such materials.

3.4.9. Equipment. For equipment that the Contractor owns, the Contractor will be paid for the use of that equipment at the rental rates identified for such equipment in the edition of the State of California Department of Transportation (Caltrans) publication "Labor Surcharge & Equipment Rental Rates" in effect on the date the work is performed (at the time these General Conditions were last updated, the web site for these rates was http://www.dot.ca.gov/hq/construc/equipmnt.html). If that equipment is not listed in the Caltrans publication, the U.S. Army Corps of Engineers publication "Construction Equipment Ownership and Operating Expense Schedule" in effect on the date the work is performed shall be used to determine the rental rate. For equipment that the Contractor rents or leases, the Contractor will be paid for the use of that equipment based on actual invoices submitted to Calleguas, provided that the rental or lease rates are consistent with prevailing market rates, as determined by Calleguas.

3.4.9.1. Rental Rates to Be All Inclusive. The rental rates paid, as provided above, shall include the cost of fuel, oil, lubrication supplies, small tools, necessary attachments, repairs and maintenance of all kinds, depreciation, storage, insurance, and all incidentals. Operators of equipment will be separately paid for as provided in Section 3.4.7.

3.4.9.2. Operating Condition of Equipment. All equipment shall, in the opinion of Calleguas, be in good working condition and suitable for the purpose for which the equipment is to be used.

3.4.9.3. Manufacturer's Ratings. Unless otherwise specified, manufacturer's ratings and manufacturer-approved modifications shall be used to classify equipment for the determination of

applicable rental rates. Equipment that has no direct power unit shall be powered by a unit of at least the minimum rating recommended by the manufacturer.

3.4.9.4. Small Tools. Individual pieces of equipment or tools, whether owned, leased or rented by the Contactor or a Subcontractor, having a replacement value of five hundred dollars ($500.00) or less, whether or not consumed by use, shall be considered to be small tools and no separate payment will be made therefore.

3.4.9.5. Inoperative Equipment. Rental time will not be allowed while equipment is inoperative due to breakdowns.

3.4.9.6. Idle Equipment. If the equipment is idle, the Contractor will be paid for the idle equipment at the rates identified for idle equipment in the edition of the State of California Department of Transportation (Caltrans) publication "Labor Surcharge & Equipment Rental Rates" in effect on the date the equipment is idle. If that equipment is not listed in the Caltrans publication, the U.S. Army Corps of Engineers publication "Construction Equipment Ownership and Operating Expense Schedule" in effect on the date the equipment is idle shall be used to determine the rate.

3.4.9.7. Equipment on the Work. The rental time to be paid for equipment used to perform Extra Work shall be the time the equipment is in productive operation on the Extra Work being performed and, in addition, shall include the time required to move the equipment to the location of the Extra Work and return it to the original location or to another location requiring no more time than that required to return it to its original location, except that moving time will not be paid for if the equipment is used at the site of the Extra Work on other than the Extra Work. Loading and transporting costs will be allowed, in lieu of moving time, when the equipment is moved by means other than its own power, except that no payment will be made for loading and transportation costs when the equipment is used at the site of the Extra Work on other than the Extra Work. The following shall be used in computing the rental time of equipment on the work:

(1) When hourly rates are listed, any part of an hour less than 30 minutes of operation shall be considered to be one-half (1/2) hour of operation, and any part of an hour in excess of 30 minutes will be considered 1 hour of operation.

(2) When daily rates are listed, any part of a day when the equipment is being operated for less than 4 hours of operation shall be considered to be one-half (1/2) day of operation.

3.4.10. Special Services. Special Extra Work or services are defined as that Extra Work characterized by extraordinary complexity, sophistication or innovation, or a combination of the foregoing attributes, which are unique to the construction industry. The following may be considered by Calleguas in determining payment for special services:

3.4.10.1. Use of Specialist. When Calleguas and the Contractor, by agreement, determine that a special service or Extra Work is required which cannot be performed by the forces of the Contractor or those of any of the Contractor's Subcontractors, the special service or Extra Work may be performed by an entity especially skilled in the work to be performed.

3.4.10.2. Evidence of Cost of Special Services. When the itemization of labor, material, and equipment rental costs is impractical, or not in accordance with established billing practices of the special service industry involved, Calleguas may accept other evidence of the cost of special services in lieu of itemized invoices.

3.4.10.3. Special Fabricator or Machining. When the Contractor is required to perform Extra Work necessitating special fabrication or machining processes in a fabrication or a machine shop facility away from the jobsite, the charges for that portion of the Extra Work performed at the off-site facility may, by agreement, be accepted as a special service and accordingly, the invoices for the work may be accepted without detailed itemization.

3.4.10.4. Overhead and Profit Allowance. All invoices for special services will be adjusted by deducting all cash or trade discounts offered or available, whether the discounts were taken or not. In lieu of the allowances for overhead and profit specified in Section 3.4.6, an allowance of ten percent (10%) of the first five thousand dollars ($5,000.00) and five percent (5%) of the remaining total will be added to invoices for special services.

3.4.11. Contractor to Reach Agreement with Other Forces. When Extra Work ordered by Calleguas is performed by forces other than the Contractor's organization, the Contractor shall reach agreement with such other forces as to the distribution of the payment made by Calleguas for such Work.

3.4.12. Contract Provisions Apply to Special Services. All Extra Work performed hereunder shall be subject to all of the provisions of the Contract; and the Contractor's sureties shall be bound with reference thereto as if under the original Contract.

3.5. Services During an Emergency.

3.5.1. Contractor's Obligations to Assist. The Contractor shall be obligated to assist Calleguas in the event of an emergency condition as determined by Calleguas.

3.5.2. Mobilization of Equipment and Personnel. The Contractor shall make available to Calleguas all mobilized equipment and personnel active on the Work and shall provide supervision of such personnel under the direction of Calleguas in order to perform required construction work to properly respond to the emergency condition.

3.5.3. Compensation. In all cases where the Contractor is not responsible for the emergency condition, or responding to the emergency condition, the Contractor shall be compensated for such assistance in accordance with the provisions regarding compensation for Extra Work, including demobilization and remobilization at the Work site. The Contractor shall additionally be provided with an extension of Time(s) for Completion as necessary to offset such services to Calleguas in an emergency, provided the time spent providing assistance affected the Current Controlling Operation.

3.6. Changes by the Contractor.

3.6.1. Proposed "Or-Equal" Items. Whenever materials or equipment are indicated in the Contract Documents by using the name of a proprietary item or name of a particular supplier and/or manufacturer, the naming of the item is intended to establish the type, function, and quality required. Unless specifically prohibited in the Contract Documents, materials or equipment of other suppliers and/or manufacturers may be accepted if sufficient information is submitted by the Contractor to Calleguas for the Engineer's review to determine that the material or equipment proposed is equivalent or equal to that named, subject to the following requirements:

(1) The Contractor shall submit to the Engineer, in ample time to permit acceptance without delaying the Work and in no case later than forty-five (45) Calendar Days after the Notice to Proceed, a type-written list containing a description of each proposed "or equal" item or material. Sufficient data, drawings, samples, literature or other detailed information shall be appended to this list as will demonstrate to the Engineer that the proposed substitute is equal in type, function, quality, efficiency, durability, cost of maintenance, and utility to the material specified. Failure of the Contractor to submit proposed substitutions for review in the manner described above and within the time prescribed shall be sufficient cause for rejection by the Engineer of any substitutions proposed;

(2) The burden of proof as to the type, function, quality, efficiency, durability, cost of maintenance, and utility of any such substitute product, material, or equipment shall be upon the Contractor;

(3) The Engineer may require the Contractor to furnish at the Contractor's expense additional data about the proposed substitute;

(4) The Engineer will be the sole judge as to the type, function, quality, efficiency, durability, cost of maintenance, and utility of any such substitute, and the Engineer's decision as to whether the proposed substitute is acceptable shall be final;

(5) Calleguas may require the Contractor to furnish at the Contractor's expense a special performance guarantee or other surety with respect to any substitute;

(6) Acceptance by the Engineer of a substitute item proposed by the Contractor shall not relieve the Contractor of the responsibility for the adequacy of the substitute and/or full compliance with the Contract Documents;

(7) The Contractor shall be responsible for resultant changes, including design and construction changes and all additional costs resulting from the changes which the accepted substitution requires to the Contractor's work, the work of its Subcontractors and of other contractors, and shall effect such changes without cost to Calleguas;

(8) If a substitute offered by the Contractor is not found to be equal to the specified materials, the Contractor shall furnish and install the specified material; and

(9) The Fixed Calendar Date(s) or Time(s) for Completion shall not be affected by any circumstances developing from the provisions of this section.

3.6.2. Proposed Deviations. If the Contractor requests a deviation from the Contract Documents, that is, a change to the Work that is not merely the proposal of an "or equal" material, item, or equipment, then the Contractor shall pay all costs associated with review of the proposal by Calleguas and the Engineer, whether or not the request is allowed. All such costs shall be deducted by Calleguas from payments due the Contractor. Nothing herein grants any right to the Contractor to demand review or acceptance of proposed deviations, and Calleguas may refuse to consider such deviations at its will. If Calleguas agrees to consider a proposed deviation, then:

(1) The Contractor shall submit to the Engineer, in ample time to permit acceptance without delaying the Work and no case later than forty-five (45) Calendar Days after the Notice to Proceed, a type-written description of each proposed deviation. Sufficient data, drawings, samples, literature or other detailed information shall be appended to this list as will demonstrate to the Engineer that the proposed deviation is equal in type, function, quality, efficiency, durability, cost of maintenance, and utility to the material specified.

(2) The Engineer may require the Contractor to furnish at the Contractor's expense additional data about the proposed deviation;

(3) The Engineer will be the sole judge as to the type, function, quality, efficiency, durability, cost of maintenance, and utility of any such deviation, and the Engineer's decision as to whether the proposed deviation is acceptable shall be final;

(4) Calleguas may require the Contractor to furnish at the Contractor's expense a special performance guarantee or other surety with respect to any deviation;

(5) The Contractor shall be responsible for resultant changes including design and construction changes and all additional costs resulting from the changes which the accepted deviation requires to the Contractor's work, the work of its Subcontractors and of other contractors, and shall effect such changes without cost to Calleguas;

(6) If a deviation offered by the Contractor is not found to be acceptable, the Contractor shall proceed in the manner specified by the Contract Documents, and it will not be considered Extra Work;

(7) Changes in specified methods of construction may be made at the Contractor's request, but must be approved in writing by Calleguas;

(8) Changes in the Drawings and Specifications, requested in writing by the Contractor, which do not materially affect the Work and which are not detrimental to the Work or to the interests of Calleguas may be granted by Calleguas to facilitate the Work, but must be approved in writing by Calleguas; and

(9) No Extra Payment or Time Extensions. If such deviations are granted, they shall be made at a reduction in cost or at no additional cost to Calleguas. In no event shall

consideration, review or acceptance of a requested deviation be grounds for an extension of any Time for Completion or any Fixed Calendar Date.

4. MATERIALS AND WORKMANSHIP.

4.1. Access to Work. Calleguas, the Engineer, Calleguas' consultants and their respective assistants, inspectors, agents, and other employees, shall at all times and for any purpose have access to the Work and the premises used by the Contractor, and the Contractor shall provide safe and proper facilities therefore. Furthermore Calleguas, the Engineer, Calleguas' consultants and their respective assistants, inspectors, and agents shall, at all times, have immediate access to all places of manufacture where machinery or materials are being manufactured, produced or fabricated for use in the Work, and shall have full facilities for determining that all such machinery or materials are being made strictly in accordance with the Contract Documents.

4.2. Workmanship. All work shall be done and completed in a thorough workmanlike manner and shall follow the best modern practice notwithstanding any omission from the Contract Documents. All work shall be done by mechanics skilled in their various trades, and wherever possible, all parts shall be made accurately to standard gage to facilitate replacement and repair. Surfaces requiring painting or coating for corrosion protection shall be smooth, free from sharp edges, burrs and projections, and shall have welds ground smooth, and all edges and corners of structural members shall be ground smooth.

4.3. Materials.

4.3.1. Materials to be New and Conforming. All materials and articles used for permanent installation in the Work shall be new and shall conform to the Contract Documents, and in the event the materials or articles are not specified in detail in the Contract Documents, the materials or articles shall conform to the best standard construction practices, as determined by Calleguas.

4.3.2. Materials Contacting Potable Water. All materials and coatings incorporated into the Work and contacting potable water shall be ANSI/NSF 61 approved.

4.3.3. Materials to Equal Accepted Samples. All materials must be of a quality equal to the accepted sample(s), if samples have been submitted.

4.3.4. Orders Shall Carry Notation. The Contractor shall furnish Calleguas, upon request, duplicate copies of all orders placed outside the Contractor's plant for materials or articles to be incorporated into the Work. In all cases, the Contractor's orders shall carry a notation to the effect that the materials and articles are subject to inspection and acceptance by Calleguas, both during manufacture and after delivery at the site of the Work.

4.3.5. Materials Furnished by Calleguas. The Contractor is responsible for the transportation of Calleguas-furnished materials to the jobsite. The Contractor shall notify Calleguas one (1) week in advance of desired date of receipt. The Contractor shall inspect Calleguas-furnished materials prior to taking possession. The Contractor shall notify Calleguas in writing of any damage or defects noted prior to taking possession of the materials. The Contractor shall be responsible for

repairs of all damage and defects not noted in writing at the time of possession. After taking receipt of delivered materials, the Contractor shall be responsible for proper storage and security of materials and equipment prior to installation, and shall be responsible for repairing any damage. Calleguas-furnished materials shall be hauled to the site of installation by the Contractor at its expense, including any necessary loading and unloading that may be involved. The Contractor shall be responsible for providing equipment to load, transport and unload Calleguas-furnished materials. Unless otherwise specified in the Contract Documents, the materials are to be picked up at Calleguas' property at 2100 Olsen Road, Thousand Oaks, California. The Contractor is responsible for any damage to Calleguas' facilities or property caused by loading or transportation of Calleguas-furnished materials. The cost of handling and placing materials furnished by Calleguas shall be considered as included in the price paid for Bid item(s) involving such furnished materials.

4.3.6. Coordinated and Adequate Design. The Contractor shall assume full responsibility for a coordinated and adequate design of the materials and equipment furnished. Liberal factors of safety shall be applied throughout the design, especially in the design of all parts to be subjected to intermittent or alternating stresses, or to shock. The proportions and dimensions of the individual parts of the equipment to be furnished hereunder shall be such that each part will successfully withstand all of the stresses to which it may be subjected under operating or test conditions without failure, distortion, or other evidence of weakness. Any and all parts subject to periodic renewal shall be readily accessible with minimum dismantling of the equipment involved. Adequate provisions shall be made for lubrication of bearing surfaces of all moving parts. All equipment and appurtenances furnished under the Contract shall comply with the rules and regulations of the U.S. Department of Labor, OSHA, and Cal/OSHA, as supplemented and administered by the State of California Department of Industrial Relations.

4.3.7. Care of the Work and Materials. The Contractor shall be responsible for the care of any material furnished by Calleguas and for the care of all Work until its completion and final acceptance by Calleguas. Final acceptance occurs upon the Contractor's receipt of the Statement of Acceptance from Calleguas. Except as set forth in Public Contract Code Section 7105, until its final acceptance by Calleguas, the Contractor shall, at the Contractor's own expense, replace damaged or lost material and repair damaged parts of the Work, or if the Contractor fails to do so, Calleguas will do so at the Contractor's expense.

4.3.7.1. Damage or Loss - Acts of God. As provided in Section 7105 of the California Public Contract Code, the Contractor shall not be responsible for the cost of repairing or restoring damaged portions of the Work determined to have been proximately caused by an Act of God (as Act of God is defined in Section 7105) in excess of five percent (5%) of the Contract Amount, provided that the Work damaged was built in accordance with accepted and applicable building standards and the Contract Documents. The Contractor shall obtain insurance to indemnify for any damage to the Work caused by an Act of God if the premium of said insurance coverage is called for as a separate bid item in the Bid Schedule for the Work.

4.4. Inspections and Tests.

4.4.1. Readiness for Inspection. All materials furnished and all work done shall be subject to rigid inspection. The Contractor shall furnish Calleguas full information as to the progress of the Work in its various parts and shall give Calleguas notice of the Contractor's readiness for inspection.

When required or desired by Calleguas, inspection will be made during the manufacture of articles. The Contractor shall furnish, without additional charge, all necessary facilities and assistance for the safe and convenient inspection and testing required by Calleguas. Whenever the Contractor arranges to work at night or at any time when work is not usually in progress, or to vary the period during which work is carried on each day, the Contractor shall give Calleguas one week's notice so that inspection may be provided.

4.4.2. Mill-Test Reports. The Contractor shall promptly furnish to Calleguas complete certified copies of mill-test reports, showing chemical and physical properties of materials to be furnished under the Contract.

4.4.3. Samples, Test Specimens or Test Pieces. The Contractor shall submit, without cost to Calleguas, samples, specimens, or test pieces of such materials to be furnished or used in the Work as Calleguas may require. The Contractor shall furnish, without cost to Calleguas, such quantities of concrete, concrete aggregates, and other construction material as may be required for test purposes, and shall place at Calleguas' disposal all available facilities for, and cooperate with, Calleguas in the sampling and testing of all materials and workmanship. Sample specimens or test pieces required by the Contract Documents shall be furnished and prepared ready for testing in ample time for completion of all necessary tests and analyses before the articles or materials are to be delivered or used. When required by the Contract Documents, the Contractor shall furnish and prepare all required specimens and perform all required tests and analyses at its own expense.

4.4.4. Right to Reject Articles and/or Materials. Calleguas shall have the right at all times and places to reject articles and/or materials to be furnished hereunder which, in any respect, fail to meet the requirements of the Contract Documents, regardless of whether the defects in such articles or materials are detected at the point of manufacture or after completion of the Work at the Site. If the inspector, through an oversight or otherwise, has accepted material or Work which is defective or which is contrary to the Contract Documents, such material, no matter in what stage or condition of manufacture, delivery, or erection, may be rejected by Calleguas and must be replaced, repaired, and/or corrected by the Contractor at no additional cost to Calleguas. Compliance with the Contract Documents is distinctly a duty of the Contractor and shall not be avoided by act or omission on the part of the Construction Inspector.

4.4.5. Replacement of Rejected Materials. In the event that any material at the site of the Work is rejected on account of failure to pass inspection or test, the Contractor shall replace same promptly at no additional cost to Calleguas.

4.4.6. Inspections at Fabrication Facilities.

4.4.6.1. All Materials and Equipment Subject to Factory Inspection. All materials and component equipment manufactured or assembled pursuant to the Contract Documents for incorporation into the Work shall be subject to inspection by the Materials Inspector at the place of manufacture regardless of location. Subsection 1.8.4 above describes the role of the Materials Inspector.

4.4.6.2. Scheduling of Inspections at Fabrication Facilities. For materials being fabricated for incorporation into the Work, including but not limited to pipe, valves, fittings, pumps,

and motors, or any other material or equipment that Calleguas has reserved the right to inspect during fabrication, the Contractor shall provide Calleguas with ten (10) Working Days advanced written notice of the date when fabrication will begin, unless specified otherwise in the applicable technical specification. If fabrication begins later than the date provided in the notice, the Contractor shall pay to Calleguas all costs for an inspector to wait on standby for the fabrication to begin, including but not limited to hourly wage, per diem, and expenses. Failure on the part of the Contractor to provide the notice required herein shall be just cause for Calleguas to reject the materials fabricated without such notice.

4.4.6.3. Safe Access to be Provided. The Contractor shall require the producer, manufacturer or fabricator to furnish safe access and to cooperate with the Materials Inspector in the performance of his duties. The Materials Inspector shall have free entry at all times to the manufacturer's facilities while tests and inspections are being conducted. Adequate facilities shall be furnished free of charge to allow the Materials Inspector to perform factory and plant inspections, including taking photographs. Retain on file and make available to the Materials Inspector, upon request, copies of all specified reports, test results, and quality control documentation relating to the Work.

4.5. Examination of Work Done Without Inspection. No material or article shall be used in the Work and no work shall be covered over until it has been inspected by Calleguas or Calleguas' authorized representative, and, for work associated with an encroachment permit issued by another public agency, by its authorized representative. Work done in the absence of prescribed inspection by Calleguas and by any public agency with jurisdictional authority may be required to be removed and replaced under the proper inspection, and the entire cost of removal and replacement, including the cost of all materials furnished by Calleguas and used in the Work removed, shall be borne by the Contractor, regardless of whether the removed work is found to be defective or not. Work covered up without the authority of Calleguas shall, upon order of Calleguas, be uncovered to the extent required, and the Contractor shall similarly bear the entire cost of performing all the Work and furnishing all the materials necessary for the uncovering or taking down of the Work and its subsequent replacement, as directed and approved by Calleguas.

4.6. Examination of Finished or Previously Accepted Work. The Contractor shall furnish Calleguas every reasonable facility for ascertaining whether the Work is in accordance with the requirements and intention of the Contract Documents even to the extent of uncovering or taking down portions of finished work that has been previously accepted or authorized to be covered. Should such previously accepted work thus exposed or examined prove satisfactory, the uncovering or taking down and replacing of the covering or the making good of the parts removed will be paid for under applicable Bid items, or as Extra Work, as determined by Calleguas; but should the work exposed or examined prove unsatisfactory, the uncovering, taking down, replacing and making good shall be at the expense of the Contractor, and the Contractor shall also be charged with the cost to Calleguas of any materials furnished by Calleguas for the unsatisfactory work and its replacement.

4.7. Defective Work or Materials.

4.7.1. Contractor's Payment Obligation. The Contractor shall pay to Calleguas all expenses, losses, and damages, as determined by Calleguas, incurred in consequence of any defect, omissions, or mistake of the Contractor or the Contractor's employees, or the making good thereof.

4.7.2. Inspection by Calleguas Does Not Relieve the Contractor of Obligations. The inspection of the Work shall not relieve the Contractor of any obligation to fulfill the Contract as herein prescribed, and defective work shall be made good, and unsuitable materials may be rejected, whether or not such work and materials have been previously overlooked by Calleguas and accepted or estimated for payment.

4.7.3. Contractor Responsible for Defective Materials Unless Supplied by Calleguas. If the Work, or any part thereof, shall be found defective at any time before the final acceptance of the whole Work, the Contractor shall forthwith make good such defect, without compensation, in a manner satisfactory to Calleguas, and shall be charged with the cost to Calleguas for any material furnished by Calleguas. In the event Calleguas finds, however, that the defect necessitating the repair or removal of the Work is due to the use of materials furnished by Calleguas which were, when incorporated in the Work, or have since become, unsatisfactory or unsuitable from causes for which the Contractor is not responsible, then Calleguas shall pay under applicable Bid items, or as Extra Work, for the placing, tearing out, removal from the vicinity, and replacing of such defective work or for its repair as ordered, and Calleguas will furnish, without charge, satisfactory materials to replace those previously furnished by Calleguas.

4.7.4. Rejected Materials. If any materials furnished by the Contractor for use in the Work, or selected for the Work by the Contractor, shall be rejected by Calleguas as unsuitable or not in conformity with the Contract Documents, the Contractor shall forthwith discard such materials and remove them to a satisfactory distance from the vicinity of the Work at the expense of the Contractor. Any adjustments, corrections or repairs found necessary after the delivery of articles or materials, including all additional handling and shipping, shall be paid for by the Contractor.

4.7.5. Failure to Make Ordered Repairs. If the Contractor shall fail or neglect to make the ordered repair of defective work or to remove rejected materials from the Work within ten (10) Calendar Days after Calleguas orders the Contractor to do such repair work or remove such materials, Calleguas may make the ordered repairs or remove the rejected materials and deduct the cost thereof from any monies due the Contractor. In case the expense, loss or damage, exceeds the amount due, the Contractor shall pay the amount of any excess.

4.8. Acceptance of Work Not a Waiver. Neither the acceptance by Calleguas or by any of its employees, nor any order, measurements, estimates or certificate, nor any payment for, or acceptance of the whole or any part of the Work by Calleguas or any of its representatives, nor any extension of time, nor any possession taken by Calleguas or its employees, shall operate as a waiver of any portion of this Contract or of any power herein reserved to Calleguas, or any right to damage herein provided; nor shall any waiver of any breach of this Contract be held to be a waiver of any other or subsequent breach.

4.9. Permit Compliance Inspections. It is the Contractor's responsibility to comply with all Permit requirements. The Contractor shall arrange for compliance inspections by all agencies, persons or entities issuing Permits for the Work. The Work shall not continue beyond mandatory inspection points or milestones without clearance from the controlling person, agency or entity. The Contractor shall timely notify each person, agency or entity involved in accordance with the code they enforce or in accordance with their standard operating procedures, conditions or requirements.

4.10. Salvage. Any and all reusable materials, such as removed blind flanges, valves, useful sections of piping, and the like, shall remain the property of Calleguas. Unless the Contract Documents call for such materials to be reused on the Work, the Contractor shall deliver all such materials to Calleguas' property at 2100 Olsen Road in Thousand Oaks, California at no additional cost to Calleguas. Materials not needed or desired by Calleguas shall become the property of the Contractor.

5. PERFORMANCE OF THE WORK.

5.1. Completion of the Work.

5.1.1. Contractor to Complete Work at Prices Fixed in Contract Documents. The Contractor shall complete the entire Work to the satisfaction of Calleguas at the prices fixed in the Contract Documents.

5.1.2. Contractor to Furnish All Materials, Labor and Services. The Contractor shall perform all labor and services and furnish all the materials, tools and equipment, except as otherwise provided herein, necessary or proper for performing and completing the Work required by the Contract Documents, in the manner and within the time stipulated in the Contract. All the labor, services and materials, shall be performed and furnished strictly pursuant to, and in conformity with, the Contract Documents, and the lines and grades and other directions of Calleguas as given from time to time during the progress of the Work under the terms of the Contract Documents, and in accordance with such other working drawings and documents to be furnished from time to time as provided herein. The Contractor shall furnish, erect, maintain, and remove the construction plant and such temporary works as may be required.

5.2. Contractor to Furnish Information. Before proceeding with the erection of the construction plant(s), including sheeting, bracing, and other temporary structures, the Contractor shall furnish Calleguas with information concerning, and drawings of, all such structures as may be required by the Contract Documents or as shall be ordered by Calleguas. Drawings and prints, in such detail as may be required, of articles, machinery, or fabricated materials entering into permanent construction which are by these Contract Documents required to be furnished by the Contractor and of which detailed drawings are not furnished by Calleguas shall be submitted by the Contractor to the Engineer for acceptance and shall become the property of Calleguas. Such acceptance shall not, however, operate to waive or modify any provision or requirement contained in these Contract Documents.

5.3. Specifications and Drawings/Review by Contractor. The Contractor shall keep on the Work site a copy of the Specifications, Drawings, Standard Drawings, Addenda and Permits and shall at all times give Calleguas access thereto. The Contractor shall check all dimensions and quantities on the drawings or schedules herein contained or given to the Contractor by Calleguas both prior to the bid and during construction of the Work, and shall notify Calleguas of all errors or omissions therein which may be discovered by examining and checking the Contract Documents in the Contractor's capacity as a contractor and not a design professional. The Contractor shall be liable for and shall bear all losses resulting to the Contractor on account of errors, omissions, conflicts and code violations which the Contractor observed, discovered or should have discovered during such review. The Contractor shall not take advantage of any error or omission in the Contract Documents, as full

instructions will be furnished by Calleguas should such error or omission be discovered, and the Contractor shall carry out such instructions as if originally specified.

5.4. Changed Conditions.

5.4.1. Risk of Unforeseen Obstructions or Difficulties is on Contractor. Except as otherwise specifically provided in the Contract Documents or as required by statute, the Contractor shall bear all losses resulting to the Contractor on account of the amount or character of the Work, or from any unforeseen obstructions or difficulties which may be encountered, or from any encumbrances on the line of the Work, or because the nature of the ground in or on which the Work is done is different from what is assumed or was expected or on account of the weather, Acts of God or other causes.

5.4.2. Exception: Changed Conditions. Pursuant to Public Contract Code Section 7104, for any portion of the Work which involves digging trenches or other excavations that extend deeper than four (4) feet below the surface, the Contractor shall promptly, and before the following conditions are disturbed, notify Calleguas in writing of any:

(1) Material that the Contractor believes may be material that is hazardous waste, as defined in Section 25117 of the Health and Safety Code, that is required to be removed to a Class I, Class II or Class III disposal site in accordance with provisions of existing law;

(2) Subsurface or latent physical conditions at the site differing from those indicated by information about the site made available to bidders prior to the deadline for submitting bids; and

(3) Unknown physical conditions of an unusual nature, differing materially from those ordinarily encountered and generally recognized as inherent in work of the character provided for in the Contract Documents.

5.4.2.1. Calleguas to Investigate. Calleguas shall promptly investigate such conditions (hereinafter called "changed conditions") and if it finds that the conditions do materially so differ, or do involve hazardous waste, and cause a decrease or increase in the Contractor's cost of, or the time required for, performance of any part of the Work, , then Calleguas shall issue a Change Order under the procedures described in Section 3. If Calleguas determines that the conditions are changed conditions and will materially affect any Time for Completion, the Contractor, upon submitting a written request, shall be granted an extension of time subject to the one-day notice provisions of Section 2.3.10.1 and not the fifteen-day notice provision of Section 3.2.

5.4.2.2. Contractor to Proceed with Work. In the event a dispute arises between Calleguas and the Contractor concerning whether the conditions materially differ, or involve hazardous waste or cause an increase or decrease in the Contractor's cost of, or time required for, performance of any part of the Work, the Contractor shall not be excused from any scheduled completion date provided for by the Contract, but shall proceed with all Work to be performed under the Contract. The Contractor shall retain any and all rights provided either by Contract or by law, which pertain to the resolution of disputes and protests between the contracting parties. All such disputes shall proceed in accordance with the protest and submittal of Claims procedures set forth in the General Conditions section entitled "Protests and Claims."

5.4.2.3. HAZWOPER Training is not Extra Work. The Contractor is expected to employ workers who have completed the 40 hour training required by the OSHA Standards for Hazardous Waste Operations and Emergency Response (HAZWOPER) (20 CFR 1910.120). In the event that hazardous materials are discovered during the course of the Work, employee HAZWOPER training will not be considered to be Extra Work.

5.4.2.4. Failure to Give Proper Written Notice Constitutes Waiver. The Contractor's failure to give notice in writing of such changed conditions promptly upon their discovery and before they are disturbed shall constitute a waiver of all claims in connection therewith.

5.5. Laws and Regulations.

5.5.1. Contractor to be Fully Informed. The Contractor shall keep fully informed of all laws, ordinances, and regulations in any manner affecting those engaged or employed on the Work, or the materials used in the Work, or in any way affecting the conduct of the Work, and of all orders and decrees of bodies or tribunals having any jurisdiction or authority over the same.

5.5.2. Contractor to Comply with All Applicable Laws and Permit Requirements. The Contractor shall at all times observe and comply with, and shall cause all agents and employees to observe and comply with all such applicable laws, ordinances, regulations, orders, permits, and decrees in effect or which may become effective before completion of this Contract.

5.5.3. Discrepancy or Inconsistency in Contract Documents. If any discrepancy or inconsistency should be discovered in the Contract, in relation to any such law, ordinance, regulation, order, permit, or decree, the Contractor shall promptly report the discrepancy or inconsistency in writing to Calleguas.

5.5.4. Incorporation of Mandatory Terms, Provisions, and Codes. Calleguas and the Contractor agree that all mandatory statutory terms and provisions which are required by law to be a part of a public works contract entered into by Calleguas which are not expressly referenced elsewhere in the Contract Documents are incorporated herein by this reference. If any term or provision of the Contract Documents is held to be invalid, illegal, or unenforceable or is inconsistent with the mandatory terms and provisions required by state statute to be part of any public works contract entered into by Calleguas, then the remaining terms and provisions of these Contract Documents will continue to be valid and will be performed, construed, and enforced to the fullest extent permitted by law. Any term or provision inconsistent with a mandatory statutory term or provision will be deemed amended and limited in accordance with the intent of the statute. Any term or provision found to be invalid, illegal, or unenforceable on grounds other than inconsistency with a mandatory statutory term or provision will be deemed amended and limited in accordance with the intent of the parties, determined from the face of the Contract, to the extent necessary to permit the maximum enforceability and/or validation of such term or provision.

5.5.5. Contractor to Pay Fines/Damages. The Contractor shall bear any losses incurred by, and pay any fines, penalties or damages levied against, the Contractor or Calleguas, which result from the Contractor's failure or the failure of a Subcontractor of any tier to comply with all applicable permits, agreements, certifications, laws, ordinances, regulations, orders, and decrees. Calleguas will

retain from any payments due the Contractor any monies necessary to pay any such losses borne by, or fines or penalties levied against, Calleguas. In the event the losses, fines or penalties exceed the amount due, the Contractor shall pay the amount of any excess to Calleguas.

5.6. Contamination and Pollution. The Contractor, solely at its own cost and expense, will provide clean up of any premises, property or natural resources contaminated or polluted due to the Contractor's activities. Any fines, penalties, punitive or exemplary damages assigned due to contaminating or polluting activities of the Contractor will be borne entirely by the Contractor to the extent permitted by law.

5.7. Permits/Licenses/Taxes. Except as otherwise explicitly provided elsewhere in these Contract Documents, all Permits and licenses necessary to the prosecution of the Work shall be secured by the Contractor and complied with by the Contractor at the Contractor's expense, and the Contractor shall pay all taxes properly assessed against the Contractor's equipment or property used or required in connection with the Work.

5.8. Hazardous Materials and Hazardous Waste.

5.8.1. Hazardous Substance, Hazardous Waste, or Asbestos-Related Work. In the event the Contractor encounters on the site materials he or she reasonably believes to be asbestos, a hazardous substance, or hazardous waste, the presence of such asbestos, hazardous substance, or hazardous waste was not disclosed in the Contract Documents, and the asbestos, hazardous substance, or hazardous waste has not been rendered harmless, the Contractor may continue work in unaffected areas reasonably believed safe, and shall immediately cease work on the area affected and report the condition to Calleguas in writing. For purposes of this article, "asbestos-related work" is defined in Chapter 6 (commencing with Section 6500) of Part 1 of Division 5 of the Labor Code, including Section 6501.8 of the Labor Code, and involves 100 square feet or more of surface area of asbestos-containing material and is such that it requires that the Contractor who performs the work must be certified in accordance with subdivision (a) of Section 7058.5 of the Business and Professions Code. "Hazardous substance removal" has the same meaning as used in Section 7058.7 of the Business and Professions Code, and "hazardous waste" is defined in California Health & Safety Code Section 25117. Work must be performed by employees with the appropriate level of HAZWOPER training as set forth in Section 5.4.2.3.

5.8.2. Hazardous Material. The transportation, storage, use, removal, and disposal of hazardous materials used in the performance of the Work by the Contractor and its Subcontractors shall be in accordance with all laws, ordinances, and regulations. Hazardous materials are defined by state and federal regulation. The Contractor shall be responsible for obtaining and paying for all licenses, permits, inspections, and approvals required by the use of such hazardous materials. For hazardous materials brought onto the site by the Contractor, the Contractor shall maintain at the site Material Safety Data Sheets, which shall be accessible to Calleguas personnel.

5.8.3. Hazardous Waste. If the Contractor is required to perform removal of hazardous waste, then hazardous waste shall be recycled if economically and technologically feasible, in accordance with the Health & Safety Code. Calleguas shall review all recycling, treatment, incineration and landfill proposals for hazardous waste generated by contract work processes or otherwise encountered by the Contractor at the Site. Transportation, treatment, storage, or disposal of

hazardous waste requires approval by Calleguas, and shall be performed by a state-licensed hauler and state-licensed treatment, storage, and disposal facility, as required by state and federal regulations.

5.9. Contractor's Responsibility for Defense and Indemnification.

5.9.1. Definitions. As used herein:

5.9.1.1. "Indemnitees" means and includes Calleguas, the Engineer, the individuals or entities required in the Special Conditions to be named as additional insureds, and their respective directors, officers, employees, agents, consultants and authorized volunteers.

5.9.1.2 "Losses" means and includes any and all suits, claims, demands, causes of action, proceedings, damages (including, without limitation, damages to the Work itself), costs, expenses, attorneys' fees, losses, penalties or liabilities, in law or in equity, of every kind or nature whatsoever.

5.9.2. Duty to Indemnify. To the fullest extent permitted by law, the Contractor shall indemnify and hold harmless the Indemnitees and each of them from and against:

(1) Any and all Losses for, injury to or death of any person including, but not limited to the Contractor and Indemnitees, or any of them, and any and all Losses for damages to or destruction of property of any person, including, but not limited to the Contractor and Indemnitees, or any of them, which Losses arise out of or in any manner directly or indirectly relate to the Work, including without limitation any Losses arising from or relating to any improper materials, implements, or appliances used in construction, however caused, or from the negligence or carelessness of the Contractor or the Contractor's agents or employees in the performance of the Work, or in guarding or maintaining the Work, or by or on account of any act or omission of the Contractor, the Contractor's agents or employees, or from the negligence or willful misconduct of the Contractor or the Contractor's agents or employees;

(2) Any and all Losses arising out of, resulting from, or on account of the violation of any governmental law or regulation, compliance with which is the responsibility of the Contractor or the Contractor's employees or agents; and

(3) Any and all Losses arising out of, resulting from or on account of the failure, neglect, or refusal of the Contractor or the Contractor's employees or agents to faithfully perform the Work and all of the Contractor's obligations, whether expressed or implied, under the Contract.

The Contractor shall pay and satisfy any judgment, award or decree that may be rendered against the Indemnitees, and any of them, in any and all such suits, claims, actions, or other proceedings. The Contractor's duty to indemnify shall not be affected or in any way diminished by the fact that the Indemnitees, or any of them, may have jointly caused or contributed to the liability or claim by their acts, omissions, conduct or negligence, provided however, that nothing herein shall require the Contractor to indemnify Calleguas, for liability resulting from Calleguas' sole or active negligence or willful misconduct or for defects in design furnished by Calleguas.

5.9.3. Duty to Defend. To the fullest extent allowed by law, the Contractor shall defend, through counsel of Calleguas' choice, at the Contractor's own cost, expense and risk, any and all such aforementioned suits, claims, demands, causes of action, proceedings, damages, costs, expenses, losses, penalties or liabilities, or other proceedings of every kind that may be brought or instituted against the Indemnitees, and any of them. The Contractor's duty to defend shall not be affected or diminished by assertions or allegations that the Indemnitees, or any of them, are, or may be partially, actively or solely negligent or may have jointly caused or contributed to the liability or claim by their acts, omissions, conduct or negligence.

5.9.4. Reimbursement Obligation. The Contractor shall reimburse the Indemnitees, for any and all legal expenses and costs, including reasonable attorneys' fees, incurred by each of them in enforcing the defense or indemnity provisions of the Contract Documents.

5.9.5. Insurance Proceeds. The Contractor's obligation to indemnify and defend shall not be restricted to insurance proceeds, if any, received by the Indemnitees.

5.9.6. Subcontractor's Duties of Defense and Indemnity. The Contractor shall include provisions in its subcontracts requiring defense and indemnification of the Indemnitees on the same terms required hereunder.

5.10. Trespass. The Contractor shall be responsible for all damage or injury, which may be caused by trespass of the Contractor or the Contractor's agents or employees in the course of their employment, whether the trespass was committed with or without the consent or knowledge of the Contractor.

5.11. Patents and Copyrights. The Contractor shall hold and save the Indemnitees, harmless from liability of any nature and kind, including costs and expenses, for or on account of any copyrighted or uncopyrighted composition, secret process, patented or unpatented invention, article, or appliance, manufactured, furnished, or used by the Contractor in the performance of this Contract, including their use by Calleguas, unless otherwise specifically stipulated in this Contract.

5.12. Subcontracts.

5.12.1. Subcontracts Permitted at Calleguas' Discretion. In the discretion of Calleguas and subject to the provisions of this Subsection 5.12, subcontracts may be permitted to such extent, and only to such extent, as shall be shown to be necessary or definitely advantageous to the Contractor in the prosecution of the Work, and without injury to the interests of Calleguas. The resubletting of Work by a Subcontractor shall be subject to the same limitations as an original subletting. No subcontract will be permitted which has the effect of avoiding the wage requirements or any other provisions of the Contract. Individual subcontracts, or members of contracting or subcontracting organizations, personally engaged upon the Work, shall be subject to all the requirements of these General Conditions, and to all other conditions of the Specifications applicable to employees working for wages.

5.12.2. Public Contract Code Sections 4100 et seq. The Contractor shall comply with the provisions of Chapter 4 of Part 1, Division 2 of the Public Contract Code of the State of California, Sections 4100 et seq. The following excerpts or summaries of some of the requirements of Chapter 4

are included below for information. The Contractor shall set forth in his Bid (a) the name and location of the place of business of each Subcontractor who will perform work, or labor, or render service to the Contractor in or about the construction of the Work or improvement, or any Subcontractor licensed by the State of California who, under contract to the Contractor, specially fabricates and installs a portion of the Work according to the details contained in the Drawings and Specifications, in an amount in excess of one-half of one percent (0.50%) of the Contractor's total Bid, and (b) the portion (type) of the Work that will be done by each Subcontractor. The Contractor shall list only one Subcontractor for each portion as is defined by the Contractor in the Contractor's Bid. If the Contractor fails to specify a Subcontractor or if the Contractor specifies more than one Subcontractor for the same portion of the Work to be performed under the Contract, the Contractor agrees that the Contractor is fully qualified to perform that portion, and that the Contractor shall perform that portion. Except as provided in Section 4107, the Contractor shall not substitute any person or Subcontractor in place of the Subcontractor listed in the original bid other than for causes and by procedures established in Section 4107.5. Section 4110 provides that a contractor violating any of these provisions of Chapter 4 violates the Contract and, after a public hearing, the Calleguas Board may exercise the option either to cancel the Contract or assess the Contractor a penalty in an amount of not more than ten percent (10%) of the subcontract involved.

5.12.3. Subcontracts Allowed in Calleguas' Direction. Notwithstanding the provisions of Public Contract Code Sections 4100 et seq. and the Contractor's compliance therewith, Calleguas' acceptance of a Bid shall not constitute authority to the Contractor to subcontract any of the Work to any Subcontractor named in the Bid, but permission to subcontract any portion of the Work to any Subcontractor named in the Bid shall be within the discretion of Calleguas. No Subcontractor will be recognized as such by Calleguas, and all persons engaged in the Work will be considered as employees of the Contractor and the Contractor shall be responsible for their work.

5.12.4. Subcontractor's Failure to Comply with Contract Documents. Calleguas reserves the right to order the Contractor to dismiss any Subcontractor and to terminate any subcontract if, in Calleguas' opinion, the Subcontractor fails to comply with the requirements of the Contract Documents applicable to the Work. Such discharge shall not be the basis of any claim for compensation or damages against Calleguas, the Engineer or their respective directors, officers, employees, agents, consultants or designated volunteers. Moreover, nothing herein contained shall create any contractual relationship between any Subcontractor and Calleguas or relieve the Contractor of any liability or obligation hereunder. The Contractor shall incorporate into all subcontracts, and the Subcontractor shall incorporate into all lower tier subcontracts all of the Contract Documents which are part of the Contract between Calleguas and the Contractor.

5.12.5. Terms of Subcontract(s) Terms to be Supplied to Calleguas Upon Demand. A copy of each subcontract, if in writing, or if not in writing then a written statement signed by the Contractor giving the name of the Subcontractor and the terms and conditions of such subcontract, shall be provided to Calleguas upon demand. All Subcontractors are subject to and bound by the terms of the Contract between Calleguas and the Contractor insofar as applicable to the Work covered by the subcontract and the Contractor shall ensure that each subcontract so provides.

5.13. Employment of Labor.

5.13.1. Contractor to Comply with Labor Laws. The Contractor, its agents, employees and Subcontractors shall be bound by and comply with all applicable provisions of the Labor Code and with all applicable federal, state and local laws relating to labor.

5.13.2. Character of Workers. None but skilled workers shall be employed on the Work requiring special qualifications. When required in writing by Calleguas, the Contractor or any Subcontractor shall discharge from the Work any person who:

(1) is drinking, using, or under the influence of alcohol or illegal drugs on the Work site;

(2) engages in hostile or harassing behavior towards any person because of his/her race, religious creed, color, national origin, ancestry, physical disability, mental disability, medical condition, marital status, sex, age, or sexual orientation; or

(3) is, in the opinion of Calleguas, incompetent, dishonest, disorderly, unable or unwilling to perform the Work to the standards required by these Contract Documents, or otherwise unsatisfactory.

The Contractor shall not again employ such discharged person on the Work except with the written consent of Calleguas. Such discharge shall not be the basis of any claim for compensation or damages against Calleguas, the Engineer, or their respective directors, officers, employees, agents, consultants or designated volunteers.

5.13.3. Convict Labor. No convict labor shall be directly employed by the Contractor or any Subcontractor in the performance of any Work done under this Contract.

5.13.4. Employment of Apprentices. The Contractor shall be responsible for compliance with Section 1777.5 of the California Labor Code relating to employment of Apprentices on Public Works whether employed directly or through Subcontractors.

5.13.5. Labor Code Provisions to be Included in Contracts with Subcontractors. The Contractor shall include copies of Labor Code Sections 1771, 1775, 1776, 1777.5, 1813 and 1815 in the executed contracts between the Contractor and Subcontractors.

5.14. Prevailing Rates of Wages. In accordance with the provisions of the California Labor Code, the Board of Directors of Calleguas has obtained from the Director of Industrial Relations of the State of California the determination of the general prevailing rates of per diem wages in the locality in which the Work is to be performed. A copy of this determination is available at Calleguas' principal office and will be made available to the Contractor or any interested party upon request, and the Contractor shall post a copy at the jobsite. The Contractor shall pay the prevailing wage rates for all work performed under the Contract. When any craft or classification is omitted from the general prevailing wage determinations, the Contractor shall pay the wage rate of the craft or classification most closely related to the omitted classification. The Contractor shall forfeit as a penalty to Calleguas fifty dollars ($50.00) or any greater penalty provided in the Labor Code for each Calendar Day, or

portion thereof, for each worker paid less than the prevailing wage rates for any Work done under the Contract employed in the execution of the Work by the Contractor or by any Subcontract under the Contractor in violation of the provisions of the Labor Code. In addition, the difference between such prevailing wage rates and the amount paid to each worker for each Calendar Day, or portion thereof, for which each worker was paid less than the prevailing wage rate shall be paid to each worker by the Contractor.

5.15. Form of Payment. The Contractor's issuance as payment for wages of any evidence of indebtedness is prohibited unless the same is negotiable and payable on demand without discount. Wages must be paid at least semi-monthly on regular pay days established in advance, and shall include all amounts for labor or services performed by employees of every description.

5.16. Payroll Records. The Contractor's attention is directed to Section 1776 of the Labor Code, relating to accurate payroll records, which imposes a responsibility upon the Contractor for the maintenance, certification, and availability for inspection of such records for all persons employed by the Contractor or by the Subcontractors in connection with the Work. The Contractor shall comply with Labor Code Section 1776 and the remaining applicable provisions of the Labor Code.

5.17. Hours/Days/Nondiscrimination. The Contractor shall strictly adhere to the provisions of the Labor Code regarding the 8-hour day and the 40-hour week, overtime, Saturday, Sunday and holiday work and nondiscrimination because of race, religious creed, color, national origin, ancestry, physical disability, mental disability, medical condition, marital status, sex or sexual orientation, except as provided in Section 12940 of the Government Code. Pursuant to the provisions of the Labor Code, eight hours labor shall constitute a legal day's work. Work performed by the Contractor's employees in excess of eight hours per day, and 40 hours during any one week, must include compensation for all hours worked in excess of eight hours per day, or 40 hours during any one week, at not less than one and one-half times the basic rate of pay. The Contractor shall forfeit as a penalty to Calleguas twenty-five ($25.00) or any greater penalty set forth in the Labor Code for each worker employed in the execution of the Work by the Contractor or by any Subcontractor of the Contractor, for each Calendar Day during which such worker is required or permitted to work more than eight hours in one (1) Calendar Day or more than forty (40) hours in any one calendar week in violation of the provisions of said Labor Code.

5.18. Overtime.

5.18.1. Overtime Work. Overtime Work, i.e. work in excess of eight hours in any one (1) Calendar Day on in excess of forty hours in any one calendar week, or work performed on a Saturday, Sunday or other legal holiday, shall not entitle the Contractor to any compensation for any Contract item in addition to that stipulated in the Contract for the kind of work performed. In the case of Extra Work ordered by Calleguas, no additional payment will be made to the Contractor because of the payment by the Contractor of overtime or legal holiday rates for such work, unless the overtime or legal holiday work is specifically ordered in writing by Calleguas.

5.18.2. Written Permission Required for Overtime and Shift Work as a Regular Procedure. Overtime and shift work may be established as a regular procedure by the Contractor only with the written permission of Calleguas. Such permission may be revoked at any time. No work other than overtime and shift work established as a regular procedure shall be done between the hours

of 6:00 p.m. and 7:00 a.m., nor on Saturdays, Sundays or legal holidays, except such work as is necessary for the proper care and protection of the work already performed or except in case of an emergency or work specifically ordered by Calleguas.

5.18.3. Overtime Inspection Costs. All Calleguas' costs for overtime inspection, except those occurring as a result of shift work established as a regular procedure with Calleguas' permission, or work specifically ordered by Calleguas on an overtime basis, shall be paid by the Contractor. Overtime inspection shall include any inspection required in excess of eight (8) hours per day or forty (40) hours per week. Such costs will include, but will not necessarily be limited to, engineering, inspection, construction inspectors and materials inspectors, project management, general supervision and other overhead expenses, which are directly chargeable to the overtime work. All such charges shall be deducted by Calleguas from payments due the Contractor.

5.19. Enforcement of Order. The Contractor shall be responsible for maintaining good order at all locations where work is performed under this Contract and to that end shall employ such watchpersons or take such other security measures as may be required. Unauthorized persons shall be excluded from the site of the Work. The Contractor shall not sell, nor permit or suffer the introduction or use of intoxicating liquors, narcotics, or weapons upon any of the grounds occupied or controlled by the Contractor in connection with the Work.

5.20. General Safety and Protection.

5.20.1. Contractor Responsible for Safety and Protection.

5.20.1.1. The Contractor shall be responsible for initiating, maintaining, and supervising all safety precautions and programs in connection with the Work. The Contractor shall take all necessary precautions for the safety of, and shall provide the necessary protection to prevent, damages, injury, or loss to:

(1) All persons on the Work site or who may be affected by the Work;

(2) All the work and materials and equipment to be incorporated therein, whether in storage on or off the site; and

(3) Other property at the site or adjacent thereto, including trees, shrubs, lawns, walks, pavements, roadways, structures, utilities, and underground facilities not designated for removal, relocation or replacement in the course of construction.

5.20.1.2. Should the Contractor's means and methods of construction cause damages, injury, or loss to any of the persons, work, materials, or property listed in 5.20.1.1.(1), (2) or (3), the Contractor shall immediately modify his means and methods to avoid further damage. Such modification shall not be considered Extra Work.

5.20.2. Compliance with Safety Laws and Regulations. The Contractor shall comply with all applicable laws and regulations of any public body having jurisdiction for safety of persons or property or to protect them from damage, injury, or loss; and shall erect and maintain all necessary safeguards for such safety and protection.

5.20.3. Notification to Property Owners. The Contractor shall notify owners of adjacent property and of underground facilities and utilities having facilities in the vicinity of the Work when prosecution of the Work may affect them, and shall cooperate with them in the protection, removal, relocation, and replacement of their property.

5.20.4. Contractor Liable for Damages, Injury or Loss of Property. All damage, injury, or loss to any property caused, directly or indirectly, in whole or in part, by the Contractor, any Subcontractor, supplier, or any other person or organization directly or indirectly employed by any of them to perform or furnish any of the Work or anyone for whose acts any of them may be liable, shall be remedied by the Contractor (except damage or loss attributable to the sole or active negligence or omissions of Calleguas). In the event the Contractor damages any existing property or facility, if the Contractor fails to promptly repair the damaged property or facility, the Contractor shall bear all expense of whatever nature arising from such damage and the replacement or repair thereof, and Calleguas may perform the repair or hire another contractor to repair the damage and withhold the costs associated with such repair from a progress payment or the Contractor's Final Payment.

5.20.5. Duration of Contractor's Responsibility for Safety. The Contractor's duties and responsibilities for safety and for protection of the Work shall continue until such time as Calleguas has filed the Notice of Completion.

5.20.6. Inadequate Methods, Tools or Equipment. If, at any time before the commencement or during the progress of the Work or any part of it, the Contractor's methods, tools or equipment appear to Calleguas to be unsafe, inefficient, or inadequate for securing the safety of the workers, the quality of work required, or the rate of progress stipulated, Calleguas may order the Contractor to increase their safety and efficiency or to improve their character and the Contractor shall comply with such orders at the Contractor's own expense; but neither the making of such demands nor the failure of Calleguas to make such demands shall relieve the Contractor of the obligation to secure the safe conduct of the Work, the quality of work required, and the rate of progress stipulated in the Contract Documents.

5.20.7. Sufficiency of Plant, Tools, Equipment and Methods. The Contractor alone shall be responsible for the safety, efficiency, and adequacy of plant, tools, equipment, and methods and for any damage that results from their failure or their improper construction, maintenance, or operation.

5.21. Public Convenience and Safety.

5.21.1. General. In maintaining traffic on public streets and ways adjacent to the Work, the Contractor shall take all necessary precautions for the protection of work and the safety of the public.

5.21.2. Signs, Barricades, Warnings, Etc. All signs, barricades, traffic cones, striping, guards, lights, barriers, temporary bridges, flagmen, watchmen and other safety and warning devices used on the Work shall be furnished, installed, maintained, manned and paid for by the Contractor; however, all such devices and their manner and method of use shall be subject to the approval of the appropriate local agencies having jurisdiction. All barricades and obstructions shall be adequately illuminated from sunset to sunrise.

5.21.3. Traffic Maintenance. The Contractor shall be responsible for maintaining the flow and access of vehicular traffic on the basis set forth on the traffic control plans. In areas not under construction or where traffic control is not covered elsewhere in the Contract Documents, the Contractor shall adhere to the latest edition of the "Manual of Traffic Controls for Construction and Maintenance of Work Zones" published by the State of California Department of Transportation or as required by the local jurisdiction.

(1) The traffic requirements shall apply for the entire duration of the Contract.

(2) Access to all driveways shall be maintained at all times unless otherwise specified by the Contract Documents. If driveway closures are allowed, and unless otherwise specified by the Contract Documents, the Contractor shall notify affected Calleguas in writing at least one (1) week in advance of closing any driveway and shall allow a vehicle to pass through the driveway upon fifteen (15) minutes' notice.

5.21.4. Timing of Placement of Temporary Traffic Control Devices. All temporary traffic control devices shall be set in place immediately before they are needed for construction of the Work and removed as soon as practical after they are no longer needed for construction of the Work. Temporary traffic control devices must be removed during any suspension of work requiring such devices.

5.22. Protection of Calleguas' Facilities. The Contractor shall protect Calleguas' facilities from damage resulting from the Work, including pipelines and other buried facilities. Calleguas' facilities damaged by, or as a result of, the Contractor's work under this Contract shall be repaired or replaced as demanded by Calleguas, at the Contractor's expense.

5.23. Maintenance of Existing Improvements.

5.23.1. Protection of Existing Improvements. Unless otherwise indicated on the Drawings or specified herein, or otherwise called for by Calleguas, all water, sewer, gas, or oil lines, lighting, power, or communication lines, or other surface or sub-surface structures of any nature that may be affected by the Work, shall be maintained by the Contractor and shall not be disturbed, disconnected, or damaged during the progress of the Work. The Contractor shall adequately support and protect in place existing improvements adjacent to or exposed by its construction activities. The Contractor shall take any necessary steps to protect in place any pipeline or other underground facility against any loading exceeding H-20 (e.g., a heavy crane operating over a buried pipeline).

5.23.2. Damage to Existing Improvements. In the event the Contractor, in the performance of the Work should disturb, disconnect or damage any water, sewer, gas, or oil lines, lighting, power, or communication lines, or other surface or sub-surface structures of any nature that may be affected by the Work, the Contractor shall bear all expense of whatever nature arising from such disturbances or the replacement or repair thereof. When said damage causes an unscheduled interruption of service, the Contractor shall immediately alert the utility owner and Calleguas, and the Contractor shall make the necessary arrangements with the utility owner to expedite repairs. At a minimum, reconstruction shall be of the same types of materials and to the same or better quality as that which existed prior to the start of construction and shall be to the satisfaction of the utility owner. If the affected utility owner prefers to repair the damage itself or if it is necessary for them to do so, the Contractor shall pay

all expenses associated therewith. In the event the Contractor should damage any existing improvement, property, or facility, if the Contractor fails to promptly repair the damaged property or facility, Calleguas may perform the repair or hire another contractor to repair the damage and withhold the costs associated with such repair from a progress payment or from the Final Payment.

5.23.3. Protection of Existing Fences, Plants, Etc. Except as shown in the Contract Documents, the Contractor shall not disturb nor move fences, trees, shrubbery, or other planting without written approval from Calleguas. Any such improvements moved, disturbed or damaged shall be restored by the Contractor to a condition at least as good as when the Contractor entered upon the Work, but in all cases the quality of all such restoration shall at a minimum meet the requirements of the Contract Documents.

5.23.4. Protection of Existing Calleguas Pipelines. The Contractor shall not store construction equipment which exceeds AASHTO H-20 loading or stockpile material within ten feet of the centerline of buried Calleguas pipelines.

5.23.5. Relocation of Improvements. Guy poles, wires, transformers, buried conduits and/or cables, or other utility owner improvements, which interfere with the facilities to be constructed, shall be relocated. The Contractor shall make the necessary arrangements with the appropriate utility owner for such relocations. The relocation may be by the utility owner or by the Contractor, at the utility owner's option. In either case, the cost of such relocation shall be included in the Bid.

5.24. Maintenance of Other Rights-of-Way and Structures. Except as otherwise specifically provided in the Contract Documents, the Contractor shall not do any Work that would affect any facility, including, but not limited to, railway track, pipeline, telephone, communications line, or electric transmission line, irrigation ditch or other structure, nor enter upon the right-of-way or other lands appurtenant thereto, until notified that the party responsible for securing authority has secured authority therefor from the proper persons or entities. Thereafter, and before the Contractor begins such Work, the Contractor shall give said companies or parties due notice of the intention to do so, and shall give said persons or entities convenient access and every facility for removing, shoring, supporting or otherwise protecting such tracks, lines, ditches or structures and for replacing same. If the Contractor, while performing the Work, discovers utility facilities not indicated on the Contract Documents or specified herein, the Contractor shall immediately notify Calleguas in writing within one (1) Working Day in accordance with the notice provisions of the Contract Documents.

5.25. Protecting Existing and Underground Lines and Utilities.

5.25.1. Some Information on Drawings. Calleguas and the Engineer have reviewed available records to determine the approximate location of underground lines and utilities at the construction site(s). This information is presented on the Drawings.

5.25.2. Information on Drawings May Not Represent Current Conditions. The information provided is only for the convenience of the Bidders and the Contractor and the information and data provided is not implied or warranted to represent actual and/or present day conditions. The Contractor shall accommodate actual existing field conditions on pipe Shop Drawings and other applicable submittals, and shall be responsible for constructing facilities in place which conform to the intent of the design as shown on the Drawings.

5.25.3. Contractor Responsible for Determining Subsurface Conditions. All conclusions and deductions derived from said information shall be those of the Bidders or the Contractor. The Bidders and the Contractor are solely responsible for determining the existing subsurface conditions and making any necessary changes or revisions to accommodate the actual field conditions, and all conclusions and deductions shall be considered in the Bid. It shall be the responsibility of the Contractor to ascertain the exact location of all subsurface facilities shown on the Drawings and all existing service laterals or appurtenance whose presence can be inferred from the presence of other visible facilities. Where underground main distribution conduits, such as water, gas, sewer, electric, telephone, or cable television, are shown on the Drawings, the Contractor shall assume that every parcel will be served by a service connection for each type of utility, and no Extra Work may be claimed because of any such unknown subsurface facilities encountered at the construction site(s).

5.25.4. Contractor to Comply with Underground Service Alert Laws. The Contractor shall comply with all Underground Service Alert ("DigAlert") laws. As provided in Section 4216.2 of the California Government Code, at least two (2) Working Days but not more than fourteen (14) Working Calendar Days before beginning any excavation, the Contractor shall contact the Regional Notification Center (Underground Service Alert of Southern California at 811; the Contractor shall verify the phone number for any required notifications) and obtain an inquiry identification number. The Contractor shall ensure that at least two (2) Working Days prior to potholing and the start of work, the electric, gas, telephone and other utility companies have been contacted and requested to mark out their underground utilities. This request shall be made by the Contractor prior to all trenching and excavation operations regardless of whether the Drawings show underground electric, gas, telephone and other utility ducts, cables or pipelines. When working on property owned by Calleguas, the Contractor shall provide one-week advance written notification of the request for Calleguas to mark Calleguas' underground facilities on that property. In accordance with the provisions of the California Government Code, the DigAlert inquiry identification number shall remain valid for not more than twenty-eight (28) Calendar Days from the date of issuance, and after that date shall require regional notification center revalidation; the Contractor shall be required to re-notify DigAlert if the identification number becomes invalid for any previous notifications.

5.25.5. Caltrans, Railroads and Other Nonmembers. As the State of California Department of Transportation (Caltrans) is not required by Section 4216 of the California Government Code to become a member of the Regional Notification Center, when working in the vicinity of Caltrans right-of-way the Contractor shall contact Caltrans for the location of its subsurface installations. This provision shall also apply to other utilities, agencies or entities, such as railroads, that are not required to become a member of the Regional Notification Center.

5.25.6. Utility Marking. The Contractor shall clearly paint, or cause to be painted through the Underground Service Alert process, the locations of all affected underground utilities on the pavement or identify the location with suitable markers if not on pavement. In addition to the locations of metallic pipes and conduits, non-metallic pipes, ducts and conduits, if present, shall also be similarly located using surface indicators and detection tape and shall then be similarly marked.

5.25.7. Potholing. After the utility notification and marking are completed, the Contractor shall commence "potholing" to determine the actual location and elevation of all underground utilities, piping, conduit, service laterals, structures and facilities where crossings, interferences, or connections

to the new pipelines or other facilities (the Work) are shown in the Contract Documents, marked by the utility companies, or indicated by surface signs or other surface markers or indications, including, but not limited to, visible facilities such as manholes, meter boxes, junction boxes, pull boxes, curb markings, valves, valve boxes, cabinets, walls, visible utility trenches, power lines or conduits, or the like. If a utility that is required to be potholed as described above is not found at the expected depth, the Contractor must continue to pothole deeper until either the utility is located or the pothole reaches one (1) foot below the elevation of the bottom of the planned pipeline or structure without encountering the utility. The Contractor shall also "pothole" all utilities and structures parallel to and within (fifteen) 15 feet of the pipeline being constructed. Parallel utilities shall be potholed at sufficient intervals to verify the location of the utility relative to the pipeline or structure being constructed. If the Contractor should fail to pothole a parallel utility at an interval sufficient to verify the location of the utility relative to the pipeline or structure being constructed before submitting pipe Shop Drawings or beginning construction other than potholing as required, the Contractor shall not be entitled to any Extra Work due to any interference the parallel utility may pose, and the Contractor shall be liable for any and all necessary revisions to the facility being constructed or for relocating the parallel utility, as applicable, due to the location of the parallel utility.

5.25.8. Precise Alignment. Where the precise alignment, bearing, grade or slope of an existing utility is of concern, as in cases where precise compound bends or other fittings are required for connections to existing pipelines, the Contractor shall pothole a sufficient distance on each side of the area of concern (such as the connection point) to accurately determine the exact alignment, bearing, slope and grade of the existing facility.

5.25.9. Surveying. The Contractor shall locate and uncover existing utilities to one foot below the existing utility, including points of connection, services, conduits, manholes, valves, vaults, and other underground facilities. The Contractor shall survey the top of pipe for vertical and horizontal location. The survey shall use the same coordinates and datum as the Drawings. The surveying field report(s) shall be submitted with the Potholing Report (see Section 5.25.10).

5.25.10. Potholing Report. The Contractor shall prepare and submit to the Engineer a Potholing Report, which shall identify each underground utility or point of connection and must include the following information for each: utility type, material, condition, dimensions, diameter, bedding material, horizontal and vertical location, station where it crosses any new Calleguas pipeline, elevation of the top and the bottom of the utility with reference to finished surface elevations, and clearance between the existing utility or facility and the new Calleguas facility(ies) to be constructed. Any variation in the actual elevations and the elevations indicated on the Drawings shall be clearly marked in the Potholing Report and brought to Calleguas' attention. If the Contractor does not expose all required utilities, the Contractor shall not be entitled to additional compensation for work necessary to avoid interferences nor for repair to damaged facilities. The Contractor shall accurately show all applicable utilities and connection points on the pipe Shop Drawings and other applicable submittals, and shall be responsible for incorporating actual field conditions into the pipe Shop Drawings and other applicable submittals. The complete Potholing Report shall be submitted to the Engineer, and accepted, with no exceptions taken, before the Contractor may submit pipe Shop Drawings. The Contractor shall provide a copy of the accepted Potholing Report to the pipe manufacturer(s) and shall coordinate any necessary revisions to pipeline alignment, profile or grade(s) with the manufacturer(s).

5.25.11. Use of Extreme Caution. Excavations around all underground utilities, including electrical ducts and conduits and natural gas and petroleum product pipelines, shall comply with all

applicable laws and shall be performed using extreme caution to prevent injury to workers or damage to the utilities. Similar precautions shall be exercised around telephone and television cables.

5.26. Interference with Fire Hydrants, Highways and Fences. The Contractor shall conduct operations as not to close or obstruct any portion of any highway, road or street or prevent in any manner free access to fire hydrants until the Contractor has obtained permits from the proper authorities. If any highway required to be kept open shall be rendered unsafe by the Contractor's operations, the Contractor shall make such repairs or provide such temporary guards as are acceptable to the authorities having jurisdiction and to Calleguas. Any highway or street maintenance or repair work required by local authorities in connection with necessary operations under this Contract shall be performed at the Contractor's own expense and cost. Fences subject to interference shall be maintained by the Contractor until the Work is finished and then restored to their original condition.

5.27. Restoration of Streets, Roads and Driveways.

5.27.1. General. All public and private streets, roads, sidewalks, driveways and other areas damaged or excavated by the Contractor shall be reconstructed with materials and to a degree of quality at least equal to that which existed prior to the beginning of the Work and in accordance with all Permit requirements and with the directives of applicable public agencies having jurisdiction, but in no case shall the elements of restoration be inferior to the applicable requirements set forth elsewhere in these Contract Documents. Where Permit requirements differ from the requirements set forth elsewhere in these Contract Documents the more stringent or restrictive requirements shall govern.

5.27.2. Limits of Restored Paving. All pavement disturbed or excavated in streets or roads shall be replaced to the limits of such disturbance, but in no case shall the width of restored paving be less than 4 feet; nor shall any portion or strip of existing pavement measuring 4 feet or less in width, following trench or other excavation, be permitted to remain, but shall be removed and replaced by the Contractor as though it were a part of the excavated pavement. In the event that these requirements differ from those in a Permit applicable to the Work or from those set forth elsewhere in these Contract Documents, the more stringent or restrictive requirement shall govern.

5.28. Dust Abatement.

5.28.1. Prevention of Dust. During the performance of all Work included in the Contract or any operations appurtenant thereto, whether on public rights-of-way, easements provided by Calleguas, or on private property, the Contractor shall furnish all the labor, equipment and means required and shall carry out proper and efficient measures wherever and as often as necessary, to prevent operations from producing dust in amounts damaging to property or causing a nuisance to persons living nearby or occupying buildings in the vicinity.

5.28.2. Damage from Dust. The Contractor shall be held liable for any damage resulting from dust originating from the Contractor's operations whether on public rights-of-way, Calleguas' right-of-way, or on other property. All compensation to be received for dust abatement shall be included in the prices set forth in the Bid Schedule.

5.29. Sanitation.

5.29.1. Sanitation is the Responsibility of Contractor. All parts of the Work shall be maintained in a neat, clean, and sanitary condition. All wastes and refuse from sanitary facilities provided by the Contractor or from any other source relating to the Contractor's operations shall be maintained and disposed of in a sanitary manner, satisfactory to Calleguas and in accordance with laws and regulations pertaining thereto. Fixed and portable toilets shall be made inaccessible to flies and shall be provided wherever needed for use of the Contractor, Calleguas, the Engineer, and their respective employees, agents, consultants and designated volunteers.

5.29.2. Contractor to Indemnify Against Improper Sanitation. The Contractor shall furnish all the facilities and means for proper sanitation during construction of the Work, and shall indemnify and save harmless Calleguas, the Engineer and their respective directors, officers, employees, agents, consultants and authorized volunteers, from any liability resulting from improper or insufficient sanitation measures.

5.30. Coordination with Other Projects.

5.30.1. Construction may be performed concurrently with construction of other projects. The Contractor shall coordinate all construction activities, including work areas, traffic control, and schedules, with other contractors working in the project area.

5.30.2. The Contractor and his Subcontractors shall cooperate in the coordination of their separate activities in a manner that will provide the least interference with Calleguas' operations and other contractors and/or utility companies working in the area.

5.30.3. If any difficulty or dispute should arise in the accomplishment of the above, the problem shall be brought immediately to the attention of Calleguas.

5.30.4. All contractors working on this site are subject to this requirement for cooperation, and shall abide by Calleguas' decision in resolving project coordination problems without additional cost to Calleguas.

5.31. Clean Up and Maintenance.

5.31.1. Maintenance During the Work. During the progress of the Work the Contractor shall keep the Work area in a neat and clean condition, and free from unsightly accumulation of rubbish. The Contractor shall remove all construction debris from and sweep clean the public street and rights-of-way during work as required and, as a minimum, at the end of each work day.

5.31.2. Maintenance Upon Completion of the Work. Upon completion of the Work and before the Final Estimate (as defined in Section 6.4) is submitted, the Contractor shall, at the Contractor's sole cost and expense, satisfactorily dispose of or remove from the vicinity of the Work all plant, buildings, rubbish, unused materials, concrete forms, and other equipment and materials belonging to the Contractor or used under the Contractor's direction during construction and, in the

event of a failure to do so, the same may be removed and disposed of by Calleguas at the Contractor's expense.

5.32. Record Drawings, Record Layout Sheets, and Record Electrical and Instrumentation Documentation.

5.32.1. Record Drawings. The Contractor shall furnish a marked-up set of Drawings indicating conditions as constructed, which shall reflect all changes made during construction and accurately document all facilities as observed or as constructed in the field. The Contractor shall maintain the Record Drawing set as work progresses.

5.32.2. Record Layout Sheets. The Contractor shall furnish "Record Layout Sheets", which are a marked-up set of pipe layout sheets indicating conditions as constructed, reflecting all changes made during construction and accurately documenting all facilities as observed or as constructed in the field. At a minimum, the Record Layout Sheets shall show specific placement of each pipe and shall indicate all changes from the accepted Shop Drawings to the pipe actually manufactured, fabricated, and installed. The Record Layout Sheets shall reflect all changes made during construction. The Contractor shall maintain and update the Record Layout Sheets as work progresses.

5.32.3. Record Electrical and Instrumentation Documentation and Software. The Contractor shall furnish "Record Electrical and Instrumentation Documentation," which is an electronic copy of all Shop Drawings, submittals, wiring diagrams and numbers, conduit field locations, and schematic diagrams for electric and instrumentation work indicating conditions as constructed, reflecting all changes made during construction and accurately documenting all facilities as observed or as constructed in the field. The Contractor shall maintain and update the Record Electrical and Instrumentation Documentation as work progresses. The Contractor shall provide the electronic copy of the Record Electrical and Instrumentation Documentation in the latest version of AutoCAD. The Contractor shall provide a licensed copy of all programs and software used to interface with mechanical, electrical, instrumentation, and control equipment and components provided under the Contract.

5.32.4. Record Drawings Precedent to Payment and Acceptance of Work. Maintenance of up to date Record Drawings, Record Layout Sheets, and Record Electrical and Instrumentation Documentation will be a condition precedent to monthly progress payments. Calleguas' receipt and acceptance of Record Drawings, Record Layout Sheets, and Record Electrical and Instrumentation Documentation shall be a condition precedent to Calleguas' issuance of a Statement of Acceptance for the Work

5.33. Lines, Grades and Measurements.

5.33.1. Reference lines and grades for the Work are indicated on the Drawings. The Contractor shall provide construction surveys from the Drawings, Engineer-accepted lay sheets, and Shop Drawings and such materials and such assistance as may be required for Calleguas to verify proper installation of the Work. The construction surveyor shall be a licensed Land Surveyor in the State of California. The Contractor shall preserve all benchmarks, monuments, survey marks, and stakes, and in case of their removal or destruction by the Contractor, the Contractor shall be liable for the cost of their replacement.

5.33.2. The Contractor shall keep Calleguas informed well in advance of the times and places at which he intends to do work, in order that Calleguas may verify said construction lines and grades as may be determined necessary by Calleguas.

6. PAYMENT FOR THE WORK.

6.1. Payment Only in Accordance with the Contract. The Contractor shall not demand or be entitled to receive payment for the Work or materials or any portion thereof, except in the manner set forth in the Contract; nor unless each and every one of the promises, agreements, stipulations, terms and conditions herein contained to be performed, kept, observed and fulfilled on the part of the Contractor shall have been performed, kept, observed and fulfilled, and Calleguas shall have accepted the Work and shall have recorded the Notice of Completion to that effect.

6.2. Monies May Be Retained. Calleguas may keep any monies which would otherwise be payable at any time hereunder, and apply the same, or so much as may be necessary therefore, to the payment of any expenses, losses, or damages incurred by Calleguas, for which the Contractor is liable under the Contract.

6.3. The Partial Estimates/Payment Process.

6.3.1. Exception to the Process. Unless otherwise specified in the section of the Specifications entitled "Special Conditions," partial estimates and subsequent partial payments shall be made in accordance with the procedures described in this section.

6.3.2. Monthly Estimates and Payments. Except as provided in the section entitled "Partial Estimates May be Withheld," Calleguas shall, on or about the last Working Day of each calendar month, meet with the Contractor and develop an estimate such as in their opinion shall be just and fair, of the amount and value of the Work done by the Contractor up to that time in the performance of the Contract (the "Partial Estimates"). In the event Calleguas and the Contractor fail to agree upon the Partial Estimate, Calleguas shall make in writing an estimate such as in its opinion shall be just and fair upon which the Contractor shall base its partial payment request. Partial Estimates shall not be required to be made by strict measurement, but they may be made by measurement or by estimation, or partly by one method and partly by the other, and it shall be sufficient if they are approximate only. The Contractor shall provide Calleguas with its partial payment request no later than the fifth Calendar Day of the following month.

6.3.3. Unit Price Work. In the case of work for which unit prices are named in the Contract, the Partial Estimate and the Contractor's partial payment request shall be computed on the basis of those unit prices.

6.3.4. Lump Sum Work. Within fifteen (15) Calendar Days of the mailing of the Notice to Proceed, in the case of all work for which a lump sum is named in the Bid, the Contractor shall submit a detailed schedule of each lump sum item in accordance with Section 9-2 "Lump Sum Work" of the Standard Specifications for Public Works Construction. In the case of Work for which a lump sum is named in the Contract, Calleguas and the Contractor may use the prices submitted by the Contractor for purposes of making the Partial Estimate; provided, that in case the prices submitted in the

breakdown do not, in the opinion of Calleguas, truly represent the actual relative costs of the different parts of the Work, or if the Contractor has not submitted such breakdown, Calleguas will prepare a schedule of prices which shall be used in estimating the value of the Work performed. To the figure thus arrived at shall be added any amounts due the Contractor for any approved Change Orders to the date of the Partial Estimate.

6.3.5. Retention. From the beginning of Work under the Contract until one hundred percent of it has been completed, a deduction of ten percent (the "retained percentage") shall be made from the total thus computed, and from the remainder shall be further deducted any amounts due Calleguas from the Contractor for supplies or materials furnished or services rendered and any other amounts that may be due Calleguas under the terms of the Contract. From the balance thus determined shall be deducted the amount of all previous payments and the remainder shall constitute the partial estimate for that month. The percentage deducted shall become due and payable as set forth in the subsection entitled Final Estimate and Payment.

6.3.6. When Materials Included in Partial Estimates. Unless otherwise specifically provided in the Contract Documents, materials shall be included in the Partial Estimates if, and only if, the materials comply with the requirements of the Contract Documents and have been incorporated into the Work in their final locations as shown on the Drawings and described in the Contract Documents. For example, pipe will not be paid for until it has been laid in the trench and pipe zone backfill has been placed, and a motor will not be paid for until it has been installed, all in accordance with the requirements of the Contract Documents.

6.3.7. Partial Payment Requests. Each partial payment request from the Contractor shall be reviewed by Calleguas as soon as practical after receipt for the purpose of determining that the payment request is proper. Any partial payment request determined not to be proper shall be returned to the Contractor not later than seven (7) Calendar Days after receipt by Calleguas' representative. Such returned requests shall be accompanied by a written explanation of the reasons why the payment request is not proper.

6.3.8. Amounts Reserved/Retained. As set forth above, Calleguas may at all times reserve and retain from such partial payments, or any of them:

(1) The retained percentage; and

(2) Any sum or sums, which, by the terms of the Contract, Calleguas is authorized or required to reserve or retain.

6.3.9. Partial Estimates and Payments May Be Withheld. The Partial Estimates and/or the payment thereof may, at any time, be withheld or deducted if, in the opinion of Calleguas, the Contractor is not diligently and efficiently endeavoring to comply with the intent of the Contract; has not submitted an acceptable initial or updated construction schedule; fails to provide sufficient sureties; has not maintained Record Drawings, Layout Sheets and Electrical and Instrumentation Documentation; or fails to pay labor and material bills or sums due Subcontractors as they become due.

6.3.10. Partial Payments.

6.3.10.1. Payment within 30 Calendar Days. Unless payment is withheld as provided elsewhere in the Contract, and provided the Contractor has complied with the provisions for Partial Estimates and other provisions of the Contract Documents, and provided Calleguas has determined the Contractor's payment request is proper, within thirty (30) Calendar Days after the date each partial estimate is prepared, if Calleguas is in receipt of a partial payment request, Calleguas shall pay to the Contractor the amount stated in such estimate to be due the Contractor. No such Partial Estimate or payment shall constitute an acceptance of the Work or any portion thereof.

6.3.10.2. Public Contract Code Section 20104.50. The Contractor is hereby advised as required by Section 20104.50 of the Public Contract Code that should Calleguas fail to make a partial payment within thirty (30) Calendar Days after receipt of an undisputed and properly submitted partial payment request from the Contractor, the Contractor is entitled to interest from Calleguas at the then prevailing legal rate set forth in Code of Civil Procedure Section 685.010. The number of days available to Calleguas to make a partial payment without incurring interest shall be reduced by the number of days by which Calleguas exceeds the seven (7) Calendar Days return requirement set forth in Section 6.3.7 above.

6.3.10.3. The Retained Percentage/Termination or Discontinuance of Work. In the event Work under the Contract or any part thereof shall be discontinued or terminated as provided in the section entitled Discontinuance or Termination of the Work, the retained percentage shall become the property of Calleguas to the extent necessary to repay Calleguas any excess in the cost of the Work above the Contract Amount; and after issuance of notice to discontinue Work, as provided in that section, no payment upon Partial Estimates or otherwise shall thereafter be made the Contractor for the Work covered by said notice until completion of the Work and final settlement.

6.4. Final Estimate and Payment.

6.4.1. Contractor's Certificate of Completion/Statement of Acceptance or Exceptions. Whenever the Contractor shall deem all Work under the Contract to have been completed in accordance therewith, the Contractor shall submit to Calleguas the Contractor's Certificate of Completion, which is included in the Contract Documents as an Appendix. Calleguas shall promptly ascertain whether the Work, including, but not limited to, completion of all field work, submission of Record Drawings, Record Layout Sheets, Record Electrical and Instrumentation Documentation, AutoCAD or other electronic or digital files, software such as PLC programs, and operations and maintenance manuals, and all other Work required under the Contract, has been completed, and if not, shall advise the Contractor in detail and in writing of any additional work required via a written Statement of Exceptions ("Punch List"). The Contractor shall re-submit a final Certificate of Completion after all Punch List items are complete, after which Calleguas shall re-examine the Work to ascertain whether all Work required under the Contract, including all Punch List items, has been completed. When the Contractor has complied with all provisions of the Contract to the satisfaction of Calleguas, including, but not limited to, completion of all field work, submission of Record Drawings, Record Layout Sheets, Record Electrical and Instrumentation Documentation, AutoCAD or other electronic or digital files, software such as PLC programs, and operations and maintenance manuals, and all items on any Punch Lists, Calleguas shall take prompt action thereon and shall furnish the Contractor with a Statement of Acceptance.

6.4.2. Notice of Completion. Within ten (10) Calendar Days after the date of the Statement of Acceptance of the Certificate of Completion, Calleguas shall cause to be filed, in the office of the county recorder of the county or counties in which the Work is located, a Notice of Completion for the Work herein agreed to be done by the Contractor.

6.4.3. The Final Estimate. Within sixty (60) Calendar Days from the date of the Statement of Acceptance if Calleguas has received a Release on Contract as described in Subsection 6.8.2, Calleguas shall pay to the Contractor the amount remaining after deducting from the amount of the Final Estimate all such sums as shall have been paid to the Contractor under any of the provisions of the Contract, and also all sums which by the terms hereof or as set forth in Section 7107 of the Public Contract Code Calleguas is or may be authorized or required to reserve or retain. All prior estimates upon which partial payments have been made, being merely estimates, shall be subject to correction in the Final Estimate, which corrections may be made without notice thereof to the Contractor or of the measurements upon which they are based. In the event that securities have been deposited with Calleguas by the Contractor, at the time of the Final Payment as provided for herein, Calleguas shall take appropriate action to release control of any such securities being held to insure performance. In the event of a dispute between Calleguas and the Contractor, Calleguas may withhold from the final payment an amount not to exceed one hundred-fifty percent (150%) of the disputed amount.

6.4.4. Warranty.

6.4.4.1. All warranties required to be provided by the Contract Documents shall commence running on the date of the Statement of Acceptance.

6.4.4.2. The Contractor hereby guarantees that the entire Work constructed pursuant to the Contract will meet fully all requirements thereof as to quality of workmanship and of materials furnished by the Contractor.

6.4.4.3. The Contractor hereby agrees to make at its own expense any repair or replacement made necessary by defects in materials or workmanship supplied by the Contractor that become evident within a two-year period after the Statement of Acceptance date and to restore to full compliance with the requirements of the Contract Documents, including all test requirements, any part of the Work which during said two-year period is found to be deficient with respect to any provision of the Contract Documents. When repairing or replacing Work in accordance with this section, the Contractor is responsible for all aspects of the Work, including but not limited to lockout/tagout (except to the extent that involves locking and tagging facilities operated by Calleguas), safety compliance, hazardous materials handling, removal, shipping, reinstallation, and factory and field recalibration.

6.4.4.4. Replacement of backfill where it has settled below the lines established by Calleguas or any other jurisdictional agency shall be considered part of such repair work. Repair of any pavement constructed by the Contractor which becomes necessary by reason of settlement shall likewise be considered part of such repair work.

6.4.4.5. The Contractor shall make all repairs and replacements promptly upon receipt of written orders for the same from Calleguas. If the Contractor fails to make repairs and replacements

promptly, Calleguas may contract with others for performance of the work, and the Contractor and his surety shall be liable to Calleguas for the cost thereof.

6.4.4.6. The guarantee and agreements set forth in Subsections 6.4.4.1 through 6.4.4.5 shall be secured by the performance bond which shall be delivered by the Contractor to Calleguas in accordance with the requirements of the Instructions to Bidders subsection entitled "Execution of Contract and Other Requirements of the Lowest Responsible Bidder."

6.5. No Payment for Temporary Work. No direct payment will be made to the Contractor for providing transportation, light, power, tools, and equipment or for furnishings, buildings, construction plant(s), access roads, sanitary conveniences, disposal work, water supply, fire protection, guards, trestles, telephone system, and other temporary works, or for the removal of all temporary structures, plant and materials, or for medical attendance or health protection, or for watchpersons, or guards, or for any other service, thing, or material, unless payment therefore has been expressly provided. Compensation for all such services, facilities, things, or materials necessary or required to execute the Work in accordance with the provisions of the Contract shall be considered as having been included in the prices stipulated for the Bid items. Payment for items shown on the Drawings or required by the Contract Documents, for which no Bid item is provided, shall be considered included in the prices named for the other items shown in the Bid.

6.6. Substitution of Securities for Withheld Funds.

6.6.1. Public Contract Code Section 22300. In accordance with Section 22300 of the Public Contract Code, Calleguas will permit the substitution of securities for any monies withheld by Calleguas to ensure performance under the Contract. At the request and expense of the Contractor, securities equivalent to the amount withheld shall be deposited with Calleguas, or with a state or federally chartered bank as the escrow agent, who shall then pay such monies to the Contractor. Upon completion of the Contract, the securities shall be returned to the Contractor.

Securities eligible for investment under this section shall include those listed in Government Code Section 16430, bank or savings and loan certificates of deposit, interest-bearing demand deposit accounts, standby letters of credit, or any other security mutually agreed to by the Contractor and Calleguas.

The Contractor shall be the beneficial owner of any securities substituted for moneys withheld and shall receive any interest thereon.

Public Contract Code Section 22300 is deemed incorporated herein by reference in its entirety, as if expressly set forth.

6.6.2. Escrow Agreement. The escrow agreement to be used for the purposes of this section is substantially similar to the form set forth in Public Contract Code Section 22300 and is included as an appendix in the Contract Documents and entitled "Escrow Agreement for Security Deposits in Lieu of Retention."

6.7. False or Erroneous Certificates. Neither Calleguas, nor any of its representatives, shall at any time either before or after the final completion and acceptance of the Work and payment therefore

pursuant to any estimate or certificate made or given by the Engineer, or other representative, agent or appointee of Calleguas, under the provisions of this Contract, be precluded or estopped by any such estimate or certificate from showing the true and correct amount and character of the Work done and materials furnished by the Contractor or any other person under this Contract, or from showing at any time that any such estimate or certificate is untrue and incorrect or improperly made in any particular, or that the Work and materials, or any part thereof, do not in fact conform to the Contract Documents; and Calleguas shall not be precluded or estopped notwithstanding any such estimate or certificate and payment in accordance therewith, from demanding and recovering from the Contractor such damages as Calleguas may sustain by reason of the Contractor's failure to comply with the Contract Documents.

6.8. Termination of Calleguas' Liability.

6.8.1. No Claims Except as Allowed by the Contract Documents. No claim shall be made or filed and neither Calleguas nor its Engineer, nor their respective Boards of Directors, nor any member of the Board of Directors, nor their officers, employees, designated volunteers, consultants or agents shall be liable, or held to pay any money, except as specifically set forth in the Release on Contract Form provided as an Appendix in the Contract Documents.

6.8.2. No Final Payment Without Release on Contract Form Listing Unsettled Claims. Calleguas will not make a Final Payment, nor release securities on deposit, until the Contractor has executed a Release on Contract in the form included as an Appendix in the Contract Documents. The Release on Contract shall release and discharge Calleguas, the Engineer and their respective Boards, officers, employees, designated volunteers, consultants and agents, from all claims and liability to the Contractor for all manner of debts, demands, accounts, claims and causes of action under or by virtue of the Contract except:

(1) Unsettled Claims or disputes in stated amounts listed on the Release on Contract form which have been processed in compliance with the requirements for making Claims under the Contract, including the giving of timely notice in accordance with the applicable provisions of the Contract, and compliance with the procedures set forth in the Contract Documents (reference Section 7100 of the Public Contract Code)**;** or

(2) Any claim against Calleguas for the remainder, if any, of the amounts kept or retained as required by stop notices or Labor Code provisions.

Acceptance of the Release on Contract Form by Calleguas shall not be deemed a waiver or release of Calleguas' right to contest either the substance on procedural validity of any listed unsettled claims or disputes. When executing the Release on Contract the Contractor shall certify that each listed claim or dispute has been processed in compliance with the requirements for making Claims under the Contract, including the giving of timely notice pursuant to the applicable provisions of the Contract Documents and compliance with the procedures for resolution of disputes or claims as set forth in the Contract Documents.

6.8.3. Stop Notices. If, at any time prior to the expiration of the period for service of a stop notice, there is served upon Calleguas a stop notice as provided in Chapter 4 of Title 15 of Part 4 of Division 3 of the Civil Code of the State of California, Calleguas shall, until the discharge thereof, withhold from the monies under its control so much of said monies due, or to become due, the

Contractor under this Contract as shall be sufficient to answer the claim stated in such stop notice and to provide for the reasonable cost of any litigation thereunder; provided that if Calleguas shall, in its discretion, permit the Contractor to file with Calleguas the bond referred to in Section 3196 of the Civil Code of the State of California, said monies shall not thereafter be withheld on account of such stop notice.

6.8.4. Disputes Over Payment. Disputes over payment shall be handled under the Protest and Claims procedure set forth in Section 8. The Contractor shall not be excused from performance of the Work, shall not be excused from any scheduled completion date, but shall proceed with all Work to be performed under the Contract notwithstanding such dispute.

7. DISCONTINUANCE OR TERMINATION THE WORK.

7.1. Discontinuance of Work.

7.1.1. Notice to Discontinue Work Under Contract. Calleguas may, by written notice, instruct the Contractor to discontinue all Work, or any part thereof, under this Contract, in the following circumstances:

(1) If the Work to be done under the Contract is abandoned by the Contractor;

(2) If the Contractor makes a general assignment for the benefit of his creditors;

(3) If the Contractor files or there is filed against the Contractor any proceeding under an insolvency or bankruptcy law;

(4) If a trustee or receiver of the Contractor's business is appointed by a court of competent jurisdiction;

(5) If this Contract is assigned otherwise than as allowed herein;

(6) If at any time Calleguas shall be of the opinion that the performance of the Contract is unnecessarily or unreasonably delayed;

(7) If the Contractor is substantially or willfully violating any of the conditions or covenants of the Contract; or is executing the same in bad faith or not in accordance with the terms thereof;

(8) If the Contractor disregards the authority of Calleguas;

(9) If the Contractor disregards laws or regulations of any public body having jurisdiction;

(10) If the Work or a portion thereof is not fully completed within a Time for Completion or by a Fixed Calendar Date named in the Contract Documents for its completion; and

(11) If the Work has been damaged by an Act of God.

7.1.2. Notice to Surety. In the event of a Notice of Discontinuance arising from a default or failure to perform by the Contractor, Calleguas may serve written notice upon the Surety on its Faithful Performance Bond demanding satisfactory compliance with the Contract.

7.1.3. Process After Notice of Discontinuance.

7.1.3.1. When such written notice is served, the Contractor shall immediately discontinue the Work or such part thereof as is covered by the notice, and shall not resume the Work except by written instructions from Calleguas. In any such case, except when the Work has been damaged by an Act of God, if Calleguas so demands, within five (5) Working Days from the date of demand, the Surety on the Faithful Performance Bond shall assume control and perform the Work as successor to the Contractor. If the Surety assumes any part of the Work, it shall take the Contractor's place in all respects for that part, and shall be paid by Calleguas for all Work performed in accordance with the Contract. If the Surety assumes the entire Contract, all money due the Contractor at the time of its default shall be payable to the Surety as the Work progresses, subject to the terms of the Contract.

7.1.3.2. If the Surety does not assume control and perform the Work within five (5) Working Days after receiving notice or fails to continue to comply, Calleguas may exclude the Surety from the premises and Calleguas may take charge of the Work and complete it by a new Contract or by force account. In so doing, Calleguas may take possession of and use any of the materials, plant, tools, equipment, supplies, and property of every kind provided by the Contractor for the purposes of the Contractor's Work. Calleguas may procure other materials and provide labor for the completion of the Work, or contract therefor, and charge the expenses of completion by either method to the Contractor and the Surety. These charges shall be deducted from such monies as may be due or may at any time become due the Contractor or the Surety under and by virtue of this Contract, or any part hereof. In case such expense shall exceed the amount which would have been due the Contractor under the Contract if the same had been completed by the Contractor, the Contractor or the Surety shall pay the amount of such excess to Calleguas within five (5) Working Days after completion of the Work; and in case such expenses shall be less than the amount which would have been payable under this Contract if the same had been completed by the Contractor, neither the Contractor nor the Surety shall have any claim to the difference except to such extent as may be necessary, in the opinion of Calleguas, to reimburse the Contractor or the Surety for any expenses, properly incurred for plant, equipment, materials, supplies, and labor devoted to the prosecution of the Work, of which Calleguas shall have received the benefit and which shall not have been otherwise paid for by Calleguas. In computing such expense, so far as it relates to plant and equipment taken over by Calleguas, the salvage value of such plant and equipment, at completion of the Work, shall be deducted from the depreciated value thereof at the time taken over by Calleguas, and the difference shall be considered as an expense. Evidence of such expense, satisfactory to Calleguas, shall be required from the Contractor and all necessary estimates and appraisements shall be made by Calleguas.

7.1.3.3. When any particular part of the Work is being carried on by Calleguas, under the provisions of this section, the Contractor or if applicable, the Surety shall continue the remainder of the Work in conformity with the terms of the Contract, and in such manner as in no way hinders or interferes with the persons or workers employed by Calleguas to do any part of the Work or

to complete the same under the provisions of this section. The provisions of this section shall be in addition to all other rights and remedies available to Calleguas by law.

7.2. Termination of Contract.

7.2.1. Termination by Calleguas. If at any time before completion of the Work under the Contract, Calleguas finds that reasons beyond the control of the parties render it impossible or against the interest of Calleguas to complete the Work contracted to be done; or if the Work shall have been prevented or suspended by injunction issued by a court of competent jurisdiction or by any other order of a constituted authority for a period in excess of thirty (30) consecutive Calendar Days, Calleguas may, by written notice to the Contractor, discontinue the Work and terminate the Contract. Calleguas also reserves the right to terminate the Work for its convenience, without any cause, by written notice to the Contractor.

7.2.2. Termination by Request of Contractor. If the entire Work shall have been suspended for a period in excess of one hundred (100) consecutive Calendar Days, and such suspension was not contemplated by the Contract, termination may be demanded in writing by the Contractor. The Contractor's request for termination will be complied with unless Calleguas determines that the responsibility for the delay, or interruption was due to the Contractor's fault or to a failure or refusal of the Contractor to comply with the Contract, or a statute, rule regulation or decision applicable to performance of the Work or due to other matters within the control of the Contractor.

7.2.3. Process After Notice of Termination. Upon the service on the Contractor of a notice of termination of the Contract, the Contractor shall:

(1) Discontinue the Work in such manner, sequence and at such times as Calleguas may direct, continuing and doing after said notice only such Work and only until such time or times as Calleguas may direct;

(2) Take actions necessary, or that Calleguas may direct, for the protection and preservation of the Work; and

(3) Except for Work that Calleguas directs to be performed prior to the effective date of termination stated in the notice, terminate all existing purchase orders and enter into no further subcontracts or purchase orders.

7.2.4. Payment Upon Termination of Contract. In the event of a termination of Contract on the grounds set forth in Sections 7.2.1 and 7.2.2, the Contractor shall be paid for, and the final estimate prepared by Calleguas shall include:

(1) The Work actually performed up to the date of termination including any Work ordered by Calleguas to be done;

(2) All costs of termination, including demobilization and any termination charges by vendors and Subcontractors; and

(3) Fifteen percent (15%) of the Contractor's actual costs of termination for overhead and profit.

The Contractor will be paid for work performed up to the date of termination at the unit prices named in the Contract, or in the event no unit prices are named, a sum equal to that portion of the lump sum price which the Work completed prior to the date of termination bears to the total Work to be performed under the Contract, as determined by Calleguas. The Contractor shall have no claim for any other damages for discontinuance or termination of the Contract; nor shall the Contractor have any claim for anticipated profits on the Work dispensed with by the discontinuance or termination.

8. PROTESTS AND CLAIMS.

8.1. Disputes to be Brought to Calleguas' Attention. It is the intention of this section that differences arising between the parties under and by virtue of the Contract be brought to the attention of Calleguas at the earliest possible time in order that such matters may be settled, if possible, or other appropriate action taken to resolve such differences. With respect to disputes or Claims, it is also the intention of this section that the Contractor shall contemporaneously with the occurrence of the event, action or direction resulting in a Claim or dispute, document actual costs claimed to be incurred or damages claimed to be sustained through the mechanism of Daily Work Reports.

Procedures for Claims in specific situations and circumstances are provided in the following sections:

Section 2.3.10 Procedure to Apply for Extension of Time and/or Payment Due to Delay

Section 3.1.1 Field Orders

Section 3.2 Procedure to Apply for Extension of Time and/or Payment or Changes to the Work or Extra Work

Section 5.4 Changed Conditions

Compliance with the provisions of this Protest and Claims Procedure section is required once the provisions of those sections have been exhausted. Compliance with the provisions of this Protest and Claims Procedure section is required immediately in all other situations and circumstances.

8.2 Protest and Claims Procedure.

8.2.1 Notice of Protest Required Within One Working Day. If the Contractor considers any work demanded by Calleguas to be outside the requirements of the Contract, or if the Contractor considers any decision of Calleguas or its Construction Inspector to be unfair, the Contractor shall within one (1) Working Day of such work being demanded or such decision being made, submit a written protest to Calleguas' Project Manager or Construction Inspector and request written confirmation by Calleguas of such demand or decision. All protests shall contain:

(1) A brief description of the demand or decision;

(2) The name of the person making such demand or decision;

(3) The date on which it was made; and

(4) The Contractor's detailed objections and the reasons therefor.

If the dispute involves a Claim for additional compensation or an extension of any Time for Completion, the protest shall also contain the following:

(5) The reasons the Contractor believes additional compensation or Time for Completion is or will be due;

(6) The nature of the cost or delay incurred; and

(7) Insofar as possible, the amount of the potential Claim and the number of days by which the Time for Completion should be extended.

Failure to immediately protest and request such confirmation shall constitute a waiver of the Contractor's right to receive compensation or an adjustment to any Time for Completion for work performed under protest where such work precedes the protest by more than one (1) Working Day. Except for the grounds of protest or objections as are made of record in the manner specified and within the time stated herein, the Contractor waives all grounds for protest or objections to the instructions and decisions of Calleguas or its representatives. The Contractor hereby agrees that all such instructions and decisions of Calleguas are final and conclusive.

8.2.2. Confirmation. Calleguas will consider and investigate the protest and promptly respond in writing to confirm, rescind, or modify the demand or decision disputed by the Contractor.

8.2.3. Daily Work Report Required While Performing Protested Work. Upon receipt of the written confirmation from Calleguas, the Contractor shall immediately proceed in accordance therewith. For work performed under protest for which additional compensation may be claimed, unless otherwise directed in writing by Calleguas, the Contractor shall furnish a Daily Work Report to Calleguas at the end of each day that protested work was performed. Daily Work Reports shall be submitted on forms provided by Calleguas.

8.2.3.1. Failure to Submit Daily Work Report Constitutes Waiver. Failure to submit the Daily Work Report by the close of the next Working Day may waive any right to payment of alleged additional costs for that Calendar Day. An attempt shall be made by Calleguas and the Contractor to reconcile the Daily Work Report daily, and it shall be signed by Calleguas and the Contractor. In the event of disagreement, pertinent notes shall be entered by each party to explain points that cannot be resolved immediately. Each party shall sign a copy of the Daily Work Report. Costs incurred by Subcontractors shall be submitted on the Daily Work Report submitted by the Contractor.

8.2.4. Execution of Daily Work Report. The signature by the Contractor on the Daily Work Report shall constitute a representation by the Contractor that such costs as described were the costs which were actually incurred for the period in question for Work performed under protest or for which additional compensation may be claimed. Calleguas' signature on the Daily Work Report (unless

otherwise qualified by written comments) shall not constitute a concession that the Contractor is entitled to recovery of such costs, but only acknowledges receipt of back up information for the Contractor's potential Claim.

8.2.5. Submittal of Claim.

8.2.5.1. Timing. In order to preserve its right to pursue a remedy if any protested or disputed matter remains unresolved, in addition to providing Calleguas with Daily Work Reports, the Contractor shall file a written Claim no later than thirty (30) Calendar Days after the submission of a protest or within thirty (30) Calendar Days of the close of the month during which extra cost or delay is claimed to have been incurred or before the date the final payment is due under the Contract, whichever is earlier.

8.2.5.2. Form of Claim. The Claim shall:

(1) Set forth the Contractor's factual or legal contentions upon which its objections to Calleguas' demand or decisions are based;

(2) Describe the impacts to the Contractor's operations affected by the demand or decision;

(3) Outline the general nature and extent of costs or delays involved;

(4) Set forth clearly and in detail each item of additional compensation or time adjustment claimed and the reasons for each item claimed;

(5) Reference the applicable provisions of the Contract Documents;

(6) Include copies of all supporting invoices;

(7) Contain substantiation by critical path analysis that the Current Controlling Operation was impacted; and

(8) Contain all other pertinent factual data necessary to evaluate the Claim.

The Claim shall include copies of supporting documents necessary to substantiate the Claim. Daily Work Reports already submitted need not be resubmitted unless a request to resubmit is made by Calleguas. Supporting data is subject to audit in accordance with the subsection of these General Conditions entitled "Right to Audit."

8.2.5.3. Certification Under Penalty of Perjury. The Contractor shall certify under penalty of perjury that the information contained in the Claim is true, that the supporting data is accurate and complete, and that the amount requested accurately reflects the Contract adjustment for which Calleguas is responsible. All Claims shall be accompanied by a cover sheet on the Contractor's letterhead which includes the following personal verification of the Claim executed in the same manner as the Contract, except that the Contractor's signatories shall also sign: "I _____[insert name], being the _____[insert title] of

_____[Contractor], declare under penalty of perjury under the laws of the State of California, and do personally certify and attest that: I have thoroughly reviewed the attached Claim for additional compensation and/or extension of time, and know its contents, and said Claim is made in good faith; the supporting data is truthful and accurate; that the amount reflected accurately reflects the Contract adjustment for which the Contractor believes Calleguas is liable; and, further, that I am familiar with California Penal Code Section 72 and California Government Code Sections 12650 et seq., pertaining to false claims, and further know and understand that submission or certification of a false claim may lead to fines, imprisonment and/or other severe legal consequences."

8.2.5.4. Substantiation Required. As set forth above, the Contractor shall submit full substantiation of its actual costs and delays with its Claim. If any claimed costs are based upon estimates then the Contractor shall provide a breakdown of the calculation used to arrive at the estimate. The Contractor shall provide the basis for each factor used in the estimate, including, but not limited to, substantiation of the costs of excess materials through purchase orders or other proof of purchase and substantiation of the costs of excess labor through payroll records. Failure to submit substantiation will be sufficient cause to deny the Claim.

8.2.5.5. Waiver of Protest or Claim. Orders or decisions of Calleguas that are protested or disputed by the Contractor shall be final and conclusive on the Contractor if the Contractor fails to submit a Claim in the manner and within the times stated above, and such failure shall constitute a waiver of the right to receive additional compensation or a time extension for that disputed or protested matter.

8.2.6. Response to Claim.

8.2.6.1. Additional Documentation. Calleguas may request in writing, within thirty (30) Calendar Days of receipt of the Claim, additional documentation supporting the Claim or relating to defenses to the Claim Calleguas may have against the Contractor. If additional information is thereafter required, it shall be requested and provided pursuant to this subsection, upon mutual agreement of Calleguas and the Contractor.

8.2.6.2. Timing on Claims Less than or Equal to $50,000.00

8.2.6.2.1. For Claims of less than or equal to fifty thousand dollars ($50,000.00), Calleguas will respond in writing to any written Claim within forty-five (45) Calendar Days of receipt of the Claim, or may request, in writing, within thirty (30) Calendar Days of receipt of the Claim, any additional documentation supporting the Claim or relating to defenses to the Claim which Calleguas may have against the Contractor.

8.2.6.2.2. If Calleguas requests further documentation, Calleguas will respond in writing within fifteen (15) Calendar Days after receipt of the further documentation or within a period no greater than that taken by the claimant in producing the additional information, whichever is greater.

8.2.6.3. Timing on Claims Greater than $50,000.00 and Less than or Equal to $375,000.00

8.2.6.3.1. For Claims of over fifty thousand dollars ($50,000.00) and less than or equal to three hundred seventy-five thousand dollars ($375,000.00), Calleguas will respond in writing to all written Claims within sixty (60) Calendar Days of receipt of the Claim, or may request, in writing, within thirty (30) Calendar Days of receipt of the Claim, any additional documentation supporting the Claim or relating to defenses to the Claim Calleguas may have against the claimant.

8.2.6.3.2. If Calleguas requests further documentation, Calleguas will respond in writing within thirty (30) Calendar Days after receipt of the further documentation or within a period no greater than that taken by the claimant in producing the additional information, whichever is greater.

8.2.7. Meet and Confer. The following meet and confer provisions apply to all Claims less than or equal to three hundred seventy-five thousand dollars ($375,000.00).

8.2.7.1. Contractor Must Demand Meet and Confer. If the Contractor disputes Calleguas' response, or Calleguas fails to respond within the time prescribed, the Contractor may notify Calleguas, in writing, either within fifteen (15) Calendar Days of receipt of Calleguas' response or within fifteen (15) Calendar Days of Calleguas' failure to respond within the time prescribed, respectively, and demand an informal conference to meet and confer for settlement of the issues in dispute.

8.2.7.1.1. Calleguas to Schedule Meet and Confer. Upon such a demand, Calleguas will contact the Contractor within thirty (30) Calendar Days to schedule a meet and confer conference for settlement of the dispute.

8.2.7.1.2. Statute of Limitations for Government Code Claim. Following the meet and confer conference, if the Claim or any portion remains in dispute, the Contractor may file a Claim pursuant to the Tort Claims Act of the Government Code ("Government Code Claim"). For purposes of those provisions, the period of time within which a Government Code Claim must be filed shall be tolled from the time the Contractor submits a written Claim pursuant to Subsection 8.2.5 until the time that Claim is denied as a result of the meet and confer process, including any period of time utilized by the meet and confer process.

8.2.8. Procedure for Civil Actions for Claims Less than or Equal to $375,000.00. If the matter remains in dispute, this subsection applies to the filing of a civil action for a Claim less than or equal to three hundred seventy-five thousand dollars ($375,000.00).

8.2.8.1. Nonbinding Mediation. Within sixty (60) Calendar Days, but no earlier than thirty (30) Calendar Days, after the filing of responsive pleadings, the court shall submit the matter to non-binding mediation unless waived by mutual stipulation of both parties. The mediation process shall provide for the selection within fifteen (15) Calendar Days by both parties of a disinterested third person as mediator, shall begin within thirty (30) Calendar Days of the submittal, and shall be concluded within fifteen (15) Calendar Days from the start of the mediation unless the time

requirement is extended by the court or by stipulation of both parties. If the parties fail to select a mediator within the fifteen-day period, any party may petition the court to appoint the mediator.

8.2.8.2. Judicial Arbitration. If the matter remains in dispute, the case shall be submitted to judicial arbitration pursuant to Sections 1141.10 et seq. of the California Code of Civil Procedure. The Civil Discovery Act of 1986 shall apply to any proceeding brought under this subsection.

8.2.8.3. Fees Normally to be Split By Parties. Arbitrators appointed shall be experienced in construction law, and, upon stipulation of the parties, mediators and arbitrators shall be paid necessary and reasonable hourly rates of pay not to exceed their customary rate, and such fees and expenses shall be paid equally by the parties, except in the case of arbitration where the arbitrator, for good cause, determines a different division.

8.2.8.4. Trial De Novo – Less Favorable Judgment – Attorney Fees Award. Any party who after receiving an arbitration award requests a trial de novo but does not obtain a more favorable judgment shall, in addition to payment of costs and fees provided under Sections 1141.10 et seq. of the California Code of Civil Procedure, pay the attorney's fees of the other party arising out of this trial de novo.

8.2.8.5. Attendance of Witnesses. The court may, upon request by any party, order any witnesses to participate in the mediation or arbitration process.

8.2.8.6. Interest on Award. In any suit filed under this subsection, Calleguas will pay interest at the legal rate on any arbitration award or judgment. The interest will begin to accrue on the date the suit is filed in a court of law.

8.2.8.7. Payment on Undisputed Portion of Claims. Calleguas will pay undisputed portions of Claims, except as otherwise provided in the Contract Documents.

8.3. False Claims. Pursuant to Government Code Section 12650 et seq., a person who commits any of the following acts shall be liable to Calleguas for three (3) times the amount of damages that Calleguas sustains because of the act, for a civil penalty in an amount up to ten thousand dollars ($10,000.00) for any false claim presented by the Contractor, and for the costs of a civil action brought to recover any of the penalties or damages:

(1) Knowingly presents or causes to be presented to an officer or employee of Calleguas a false claim for payment or approval;

(2) Knowingly makes, uses, or causes to be made or used a false record or statement to get a false claim paid or approved by Calleguas;

(3) Conspires to defraud Calleguas by getting a false claim allowed or paid by Calleguas;

(4) Knowingly makes, uses, or causes to be made or used a false record or statement to conceal, avoid, or decrease an obligation to pay or transmit money or property to Calleguas;

(5) Is a beneficiary of an inadvertent submission of a false claim to Calleguas, subsequently discovers the falsity of the claim, and fails to disclose the false claim to Calleguas within a reasonable time after discovery of the false claim; and

(6) Any other act described in Government Code Section 12651(a).

8.4. Right to Audit. If the Contractor submits a claim or request to Calleguas for any Extra Work, Calleguas shall have the right, as a condition to considering the claim or request and as a basis for evaluation of the claim or request, to audit the Contractor's and Subcontractor's books and records related to the Work. The right to audit shall include the right to examine the pre-bid records and estimates, books, records, documents and other relevant evidence and the right to examine accounting procedures and practices sufficient to determine and verify all direct and indirect costs claimed to have been incurred or anticipated to be incurred and for which a claim has been submitted. The right to audit shall include the right to inspect the Contractor's or Subcontractor's plant, or such parts thereof as may be or have been engaged in the performance of the Work. The right to audit encompasses all Subcontractors and is binding upon Subcontractors. The right to audit shall be exercisable through such representatives as Calleguas deems desirable during the Contractor's normal business hours at the office of the Contractor. The Contractor shall make all such records available to Calleguas for inspection upon seven (7) Calendar Days notice and shall provide true and correct copies of any records to Calleguas within seven (7) Calendar Days of any request. The Contractor shall include in all contracts with Subcontractors the requirements of this section.

8.5. Tort Claims. The Protest and Claims Procedure set forth herein shall not apply to tort claims and nothing herein shall be construed to change the time periods for filing tort claims or actions specified by Chapter 1 (commencing with Section 900) and Chapter 2 (commencing with Section 910) of Part 3 of Division 3.6 of Title 1 of the Government Code.

8.6. Obligation to Continue Work. The Contractor, in the event of any dispute or controversy with Calleguas over any matter whatsoever, shall not cause any delay or cessation of the Work, but shall proceed under the Contract with the performance of the Work.

9. MISCELLANEOUS.

9.1. Captions. Any captions to, or headings of, the sections, subsections, paragraphs or subparagraphs are solely for the convenience of the parties hereto and shall not be used for the interpretation or determination of the validity of this Contract or any provisions hereof.

9.2. Waiver. The waiver or failure to enforce any provision of these Contract Documents shall not operate as a waiver of any other provision hereof.

9.3. Partial Invalidity. The parties agree that all mandatory statutory terms and provisions, which are required by law to be a part of a public works contract entered into by Calleguas and which are not expressly referenced elsewhere in these Contract Documents, are incorporated herein by this reference. If any term or provision of the Contract Documents is held to be invalid, illegal or unenforceable, or is inconsistent with the mandatory provisions of any term required by statute to be a part of any public works contract entered into by Calleguas, then the remaining terms and provisions of these Contract

Documents will continue to be valid and will be performed, construed and enforced to the fullest extent permitted by law. Any term inconsistent with a statute will be deemed amended and limited in accordance with the intent of the statute. Any term or provision found to be invalid, illegal or unenforceable on grounds other than inconsistency with a mandatory statutory provision, will be deemed amended and limited in accordance with the intent of the parties, determined from the face of the Contract Documents, to the extent necessary to permit the term or provision to be enforced or validated to the maximum extent permitted.

9.4. Contractor Acknowledges Review of Contract Documents. The Contractor acknowledges by its signature on the Contract that it has fully reviewed the Contract Documents before signing them, and the Contractor acknowledges a full and fair opportunity to seek clarification of any of the Contract Documents terms. Any rule of construction to the effect that ambiguities are to be resolved against the drafting party shall not apply in interpreting the Contract Documents.

9.5. Limitations on Engineer's Review of Shop Drawings and Submittals.

9.5.1. Review Does Not Extend to Means and Methods. The Engineer's review of Shop Drawings and submittals will be only for conformance with the design concept of the Work and for compliance with the information given in the Contract Documents. The Engineer's review does not extend to means, methods, techniques, sequences, or procedures of construction (except where a specific means, method, technique, sequence, or procedure of construction is indicated in or required by the Contract Documents) or to safety precautions or programs incident thereto. The Engineer's review does not indicate a thorough review of all dimensions, quantities, and details of the material, equipment, device, or item covered. The review of a separate item as such will not indicate review of the assembly in which the item functions.

9.5.2. Review Does Not Relieve Contractor from Compliance with Contract Documents. The Engineer's review of submittals shall not relieve the Contractor from responsibility for any deviation from the requirements of the Contract Documents unless the Contractor has in writing called the Engineer's attention to each such deviation at the time of submission and the Engineer has given written acceptance of each such deviation by a specific written notation thereof incorporated in or accompanying the Shop Drawing or sample acceptance. Acceptance of submittals by the Engineer shall not relieve the Contractor from responsibility for errors or omissions in the drawings and data or from responsibility for having complied with the provisions of the Contract Documents.

9.6. Antitrust Claims. By entering into this Contract, the Contractor offers and agrees to assign to Calleguas all rights, title, and interest in and to all causes of action it may have under Section 4 of the Clayton Act (15 U.S.C. Sec. 15) or under the Cartwright Act (Chapter 2, of Part 2 of Division 7 of the Business and Professions Code (commencing with Section 16700)), arising from purchases of goods, services, or materials pursuant to the Contract. The Contractor shall include in each subcontract a provision corresponding to the foregoing, binding the Subcontractor to offer and agree to assign to Calleguas such rights, title and interest held by such Subcontractor. This assignment shall be made and become effective at the time Calleguas tenders final payment to the Contractor, without further acknowledgment by the parties.

9.7. Additional Surety. If during the continuance of the Contract, or during the life of any guarantee or warranty required under the Contract, any of the sureties upon the faithful performance bond in the opinion of Calleguas are or become insufficient, Calleguas may require additional

sufficient sureties, which the Contractor shall furnish to the satisfaction of Calleguas within fifteen (15) Calendar Days after notice. No further payment shall be deemed due or will be made under the Contract until a new surety shall qualify and be accepted by Calleguas. In the event the Contractor fails to furnish additional sufficient sureties during the construction of the Work, then the Contract may be suspended and the Work completed as provided in the section of these General Conditions entitled "Notice to Discontinue Work Under Contract".

9.8. Assignment Forbidden. The Contractor shall not assign, transfer, convey, sublet, or otherwise dispose of this Contract, or of his right, title or interest in or to the same or any part thereof, without the previous consent in writing of Calleguas. The Contractor shall not assign, by power of attorney or otherwise, any of the monies to become due and payable under the Contract without the previous consent in writing of Calleguas. If the Contractor should without such previous written consent, assign, transfer, convey, sublet, or otherwise dispose of the Contract, or of his right, title or interest therein, or of any of the monies to become due under the Contract, to any other person, company, or other corporation, the Contract may at the option of Calleguas be terminated, revoked, and annulled, and Calleguas shall thereupon be relieved and discharged from any and all liability and obligations growing out of the same to the Contractor, and to the Contractor's assignee or transferee. Any permitted assignment shall not relieve the Contractor from liability under the Contract. No right under the Contract, nor any right to any money to become due hereunder, shall be asserted against Calleguas in law or equity by reason of any so-called assignment of the Contract, or any part thereof, or by reason of the assignment of any monies to become due hereunder, unless authorized by the written consent of Calleguas.

9.9. Title to Materials Found on the Work. Unless otherwise specified in the Contract Documents, the title to all water and to the right to use of all water, soil, stone, gravel, sand, minerals, and all other materials developed or obtained in the excavation or other operations by the Contractor or any Subcontractor or any of their employees, and the right to dispose of the same, are hereby expressly reserved in Calleguas and neither the Contractor, nor any Subcontractor, nor any of their employees shall have any right, title, or interest in or to any part thereof, neither shall they, nor any of them, assert or make any claim thereto. The Contractor may be permitted to use in the Work, without charge, any such materials that meet the requirements of the Specifications.

9.10. Right of Property in Materials. Nothing in this Contract shall be considered as vesting in the Contractor any right of property in materials used, after they have been attached or installed in the ground in their final location as shown on the Drawings and described in the Contract Documents.

9.11. Use of Completed Portions of the Work. Calleguas or their assignee shall have the right to take possession of and use any completed or partially completed portion of the Work, notwithstanding the Time(s) for Completion and Fixed Calendar Date(s) of the Work. Such taking possession of and use of any part of the Work shall not be deemed an acceptance of any such part of the Work, nor shall it be deemed completion or substantial completion of the Work, nor shall it entitle the Contractor to any payment except such payment as is expressly set forth herein. If such prior possession or use increases the cost of the Work, the Contractor shall be entitled to claim extra compensation within fifteen (15) Calendar Days of each occurrence. The amount of any such extra compensation shall be determined according to the section of these General Conditions entitled "Payment for Extra Work."

9.12. Audit and Access to Records.

9.12.1. Definition of Record. For purposes of this article the word "record" means any form of communication or representation, including, but not limited to, letters, words, pictures, sounds, or symbols, or combinations thereof whether contained in handwritten, typewritten, printed, photocopied, photographed, or any form of electronic media, and every other means of recording upon any tangible thing.

9.12.2. Contractor to Maintain Pertinent Records. The Contractor shall maintain all records directly pertinent to the performance of the Work under the Contract in accordance with generally accepted accounting principles and practices as applicable. The Contractor shall also maintain all records used in the preparation or support of any cost submissions, including the Contractor's original Bid, Extra Work, Change Orders, Claims, or other request for equitable adjustment.

9.12.3. Calleguas has the Right to Audit. Calleguas has the right to conduct audits of books and records of the Contractor and Subcontractors that relate to the Work. Calleguas has the right to audit all costs and accounting information including, without limitation, books, documents, logs, and records (including electronic media) of the Contractor and its Subcontractors relating to this Contract or to the construction of the Work.

9.12.4. Contractor to Provide Access Upon 24 Hours Notice. Upon twenty-four (24) hours advance, written notice, Calleguas shall have access to these records and all other evidence for the purpose of inspection, audit, and copying during normal business hours. The Contractor shall provide proper facilities for such access, inspection, and copying purposes.

9.12.5. Applicability of Audit Provisions. The Contractor agrees to make the provisions of this article applicable to the Contract and all Extra Work, Change Orders, Claims, or other requests for equitable adjustment affecting the Contract Amount, Bid Prices, or Time(s) for Completion or related to project performance in excess of ten thousand dollars ($10,000.00). The Contractor agrees to include the provisions of this article and to make them applicable to all subcontracts and contracts with suppliers, of any tier.

9.12.6. Record Retention Period. Records under the provisions of this article shall be maintained and made available during the performance of the Work under the Contract until three (3) years past final payment, or until final settlement of all disputes, claims, or litigation, whichever occurs later. In addition, records that relate to the Contract, claim, change order, dispute, litigation, or costs or items to which an audit exception has been taken shall be maintained and made available until final payment or final resolution of such dispute, litigation, claim, or exception, whichever occurs later.

9.12.7. Access Not Limited to Record Retention Period. Access to records is not limited to the required retention periods. The authorized representatives of Calleguas shall have access to records at any reasonable time for as long as the records are maintained.

9.12.8. Audit Provisions Survive Contract Termination. The provisions of this article shall survive termination of the Contract.

9.13. Attorneys' Fees and Venue.

9.13.1. Attorneys' Fees. If any legal action is brought to enforce or interpret the provisions of this Contract, the prevailing party shall be entitled to reasonable attorneys' fees in addition to any other relief to which that party may be entitled.

9.13.2. California Law and Venue. This Contract shall be governed by the laws of the State of California, and venue for any action shall be in the County of Ventura.

9.14. Gender. The neuter gender, masculine gender, and feminine gender shall be deemed to refer to and include the masculine and the feminine gender.

END OF GENERAL CONDITIONS

1. SPECIAL FEDERAL PROVISIONS AND SPECIFICATIONS.

1.1 Contracting with Small and Minority Firms, and Women's Business Enterprises.

a. The Contractor shall take all necessary affirmative steps to assure that minority firms, and women's business enterprises are used when possible.

b. Affirmative steps shall include:

(1) Placing qualified small and minority businesses and women's business enterprises on solicitation lists;

(2) Assuring that small and minority businesses and women's business enterprises are solicited whenever they are potential sources;

(3) Dividing total requirements, when economically feasible, into smaller tasks or quantities to permit maximum participation by small and minority business, and women's business enterprises;

(4) Establishing delivery schedules, where the requirement permits, which encourage participation by small and minority business, and women's business enterprises;

(5) Using the services and assistance of the Small Business Administration, and the Minority Business Development Agency of the Department of Commerce as appropriate, and

1.2 Equal Opportunity Clause. During the performance of this contract, the contractor agrees as follows:

(1) In this section, "Executive Order 11246" shall mean Executive Order No. 11246 of September 24, 1965, entitled "Equal Employment Opportunity," as amended by Executive Order 11375 of October 13, 1967, and as supplemented in Department of Labor regulations (41 CFR chapter 60).

(2) The Contractor will not discriminate against any employee or applicant for employment because of race, color, religion, sex, or national origin. The Contractor will take affirmative action to ensure that applicants are employed, and that employees are treated during employment, without regard to their race, color, religion, sex, or national origin. Such action shall include, but not be limited to the following: Employment, upgrading, demotion, or transfer; recruitment or recruitment advertising; layoff or termination; rates of pay or other forms of compensation; and selection for training, including apprenticeship. The Contractor agrees to post in conspicuous places, available to employees and applicants for employment, notices setting forth the provisions of this nondiscrimination clause.

(3) The Contractor will, in all solicitations or advertisements for employees placed by or on behalf of the contractor, state that all qualified applicants will receive consideration for employment without regard to race, color, religion, sex, or national origin.

(4) The Contractor will send to each labor union or representative of workers with which he has a collective bargaining agreement or other contract or understanding, a notice, to be provided by the Bureau of Reclamation or its designee advising the said labor union or workers' representatives of the contractor's commitments under Section 202 of Executive Order No. 11246 and shall post copies of the notice in conspicuous places available to employees and applicants for employment.

(5) The Contractor will comply with all provisions of Executive Order 11246 and of the rules, regulations, and relevant orders of the Secretary of Labor.

(6) The Contractor will furnish all information and reports required by Executive Order 11246and by the rules, regulations, and orders of the Secretary of Labor, or pursuant thereto, and will permit access to his books, records, and accounts by the Bureau of Reclamation or its designee and the Secretary of Labor for purposes of investigation to ascertain compliance with such rules, regulations, and orders.

(7) In the event of the Contractor's noncompliance with the nondiscrimination clauses of this contract or with any of the said rules, regulations, or orders, this contract may be canceled, terminated, or suspended in whole or in part and the contractor may be declared ineligible for further Government contracts or federally assisted construction contracts in accordance with procedures authorized in Executive Order 11246 of September 24, 1965, and such other sanctions may be imposed and remedies invoked as provided in Executive Order 11246, or by rule, regulation, or order of the Secretary of Labor, or as otherwise provided by law.

(8) The Contractor will include the portion of the sentence immediately preceding paragraph (1) and the provisions of paragraphs (1) through (8) in every subcontract or purchase order unless exempted by rules, regulations, or orders of the Secretary of Labor issued pursuant to Section 204 of Executive Order 11246, so that such provisions will be binding upon each subcontractor or vendor. The Contractor will take such action with respect to any subcontract or purchase order as the Bureau of Reclamation or its designee may direct as a means of enforcing such provisions including sanctions for noncompliance: *Provided, however,* that in the event the Contractor becomes involved in, or is threatened with, litigation with a subcontractor or vendor as a result of such direction by the Bureau of Reclamation or its designee, the contractor may request the United States to enter into such litigation to protect the interests of the United States.

1.3 Standard Federal Equal Employment Opportunity Construction Contract Specifications (Executive Order 11246).

1. As used in these specifications:

a. "Covered area" means the geographical area described in the solicitation from which this contract resulted;

b. "Director" means Director, Office of Federal Contract Compliance Programs, United States Department of Labor, or any person to whom the Director delegates authority;

c. "Employer identification number" means the Federal Social Security number used on the Employer's Quarterly Federal Tax Return, U.S. Treasury Department Form 941.

d. "Minority" includes:

(i) Black (all persons having origins in any of the Black African racial groups not of Hispanic origin);

(ii) Hispanic (all persons of Mexican, Puerto Rican, Cuban, Central or South American or other Spanish Culture or origin, regardless of race);

(iii) Asian and Pacific Islander (all persons having origins in any of the original peoples of the Far East, Southeast Asia, the Indian Subcontinent, or the pacific Islands); and,

(iv) American Indian or Alaskan Native (all persons having origins in any of the original peoples of North America and maintaining identifiable tribal affiliations through membership and participation or community identification).

2. Whenever the Contractor, or any Subcontractor at any tier, subcontracts a portion of the work involving any construction trade, it shall physically include in each subcontract in excess of $10,000 the provision of these specifications and the Notice which contains the applicable goals for minority and female participation and which is set forth in the solicitations from which this contract resulted.

3. If the Contractor is participating (pursuant to 41 CFR 60-4.5) in a Hometown Plan approved by the U.S. Department of Labor in the covered area either individually or through an association, its affirmative action obligations on all work in the Plan area (including goals and timetables) shall be in accordance with that Plan for those trades which have unions participating in the Plan. Contractors must be able to demonstrate their participation in and compliance with the provisions of any such Hometown Plan. Each Contractor or Subcontractor participating in an approved Plan is individually required to comply with its obligations under the EE0 clause, and to make a good faith effort to achieve each goal under the Plan in each trade in which it has employees. The overall good faith performance by other Contractors or Subcontractors toward a goal in an approved Plan does not excuse any covered Contractor's or Subcontractor's failure to take good faith efforts to achieve the Plan goals and timetables.

4. The Contractor shall implement the specific affirmative action standards provided in paragraphs 7 a through p of these specifications. The goals set forth in the solicitation from which this contract resulted are expressed as percentages of the total hours of employment and training of minority and female utilization the Contractor should reasonably be able to achieve in each construction trade in which it has employees in the covered area. Covered Construction contractors performing construction work in geographical areas where they do

not have a Federal or federally assisted construction contract shall apply the minority and female goals established for the geographical area where the work is being performed. Goals are published periodically in the Federal Register in notice form, and such notices may be obtained from any Office of Federal Contract Compliance Programs office or from Federal procurement contracting officers. The Contractor is expected to make substantially uniform progress in meeting its goals in each craft during the period specified.

5. Neither the provisions of any collective bargaining agreement, nor the failure by a union with whom the Contractor has a collective bargaining agreement, to refer either minorities or women shall excuse the Contractor's obligations under these specifications, Executive Order 11246, or the regulations promulgated pursuant thereto.

6. In order for the nonworking training hours of apprentices and trainees to be counted in meeting the goals, such apprentices and trainees must be employed by the Contractor during the training period, and the Contractor must have made a commitment to employ the apprentices and trainees at the completion of their training, subject to the availability of employment opportunities. Trainees must be trained pursuant to training programs approved by the U.S. Department of Labor.

7. The Contractor shall take specific affirmative actions to ensure equal employment opportunity. The evaluation of the Contractor's compliance with these specifications shall be based upon its effort to achieve maximum results from its actions. The Contractor shall document these efforts fully, and shall implement affirmative action steps at least as extensive as the following:

a. Ensure and maintain a working environment free of harassment, intimidation, and coercion at all sites, and in all facilities at which the Contractor's employees are assigned to work. The Contractor, where possible, will assign two or more women to each construction project. The Contractor shall specifically ensure that all foremen, superintendents, and other on-site supervisory personnel are aware of and carry out the Contractor's obligation to maintain such a working environment, with specific attention to minority or female individuals working at such sites or in such facilities.

b. Establish and maintain a current list of minority and female recruitment sources, provide written notification to minority and female recruitment sources and to community organizations when the Contractor or its unions have employment opportunities available, and maintain a record of the organizations' responses.

c. Maintain a current file of the names, addresses and telephone number of each minority and female off-the-street applicant and minority or female referral from a union, a recruitment source or community organization and of what action was taken with respect to each such individual. If such individual was sent to the union hiring hall for referral and was not referred back to the Contractor by the union or, if referred, not employed by the Contractor, this shall be documented in the file with the reasons therefor, along with whatever additional actions the Contractor may have taken.

d. Provide immediate written notification to the Director when the union or unions with which the Contractor has a collective bargaining agreement has not referred to the Contractor a minority person or woman sent by the Contractor, or when the Contractor has other information that the union referral process has impeded the Contractor's efforts to meet its obligations.

e. Develop on-the-job training opportunities and/or participate in training programs for the area which expressly include minorities and women, including upgrading programs and apprenticeship and trainee programs relevant to the Contractor's employment needs, especially those programs funded or approved by the Department of Labor. The Contractor shall provide notice of these programs to the sources compiled under 7b above.

f. Disseminate the Contractor's EEO policy by providing notice of the policy to unions and training programs and requesting their cooperation in assisting the Contractor in meeting its EEO obligations; by including it in any policy manual and collective bargaining agreement; by publicizing it in the company newspaper, annual report, etc.; by specific review of the policy with all management personnel and with all minority and female employees at least once a year; and by posting the company EEO policy on bulletin boards accessible to all employees at each location where construction work is performed.

g. Review, at least annually, the company's EEO policy and affirmative action obligations under these specifications with all employees having any responsibility for hiring, assignment, layoff, termination or other employment decisions including specific review of these items with onsite supervisory personnel such as Superintendents, General Foreman, etc., prior to the initiation of construction work at any job site. A written record shall be made and maintained identifying the time and place of these meetings, persons attending, subject matter discussed, and disposition of the subject matter.

h. Disseminate the Contractor's EEO policy externally by including it in any advertising in the news media, specifically including minority and female news media, and providing written notification to and discussing the Contractor's EEO policy with other Contractors and Subcontractors with whom the Contractor does or anticipates doing business.

i. Direct its recruitment efforts, both oral and written, to minority, female and community organizations, to schools with minority and female students and to minority and female recruitment and training organizations serving the Contractor's recruitment area and employment needs. Not later than one month prior to the date for the acceptance of applications for apprenticeship or other training by any recruitment source, the Contractor shall send written notification to organizations such as the above, describing the openings, screening procedures, and tests to be used in the selection process.

j. Encourage present minority and female employees to recruit other minority persons and women and, where reasonable, provide after school, summer and vacation employment to minority and female youth both on the site and in other areas of a Contractor's work force.

k. Validate all tests and other selection requirements where there is an obligation to do so under 41 CFR Part 60-3.

l. Conduct, at least annually, an inventory and evaluation at least of all minority and female personnel for promotional opportunities and encourage these employees to seek or to prepare for, through appropriate training, etc., such opportunities.

m. Ensure that seniority practices, job classifications, work assignments and other personnel practices, do not have a discriminatory effect by continually monitoring all personnel and employment related activities to ensure that the EEO policy and the Contractor's obligations under these specifications are being carried out.

n. Ensure that all facilities and company activities are nonsegregated except that separate or single-user toilet and necessary changing facilities shall be provided to assure privacy between the sexes.

o. Document and maintain a record of all solicitations of offers for subcontracts from minority and female construction contractors and suppliers, including circulation of solicitations to minority and female contractor associations and other business associations.

p. Conduct a review, at least annually, of all supervisors' adherence to and performance under the Contractor's EEO policies and affirmative action obligations.

8. Contractors are encouraged to participate in voluntary associations which assist in fulfilling one or more of their affirmative action obligations (7a through p). The efforts of a contractor association, joint contractor-union, contractor-community, or other similar group of which the contractor is a member and participant, may be asserted as fulfilling any one or more of its obligations under 7a through p of these Specifications provided that the contractor actively participates in the group, makes every effort to assure that the group has a positive impact on the employment of minorities and women in the industry, ensures that the concrete benefits of the program are reflected in the Contractor's minority and female workforce participation, makes a good faith effort to meet its individual goals and timetables, and can provide access to documentation which demonstrates the effectiveness of actions taken on behalf of the Contractor. The obligation to comply, however, is the Contractor's and failure of such a group to fulfill an obligation shall not be a defense for the Contractor's noncompliance.

9. A single goal for minorities and a separate single goal for women have been established. The Contractor, however, is required to provide equal employment opportunity and to take affirmative action for all minority groups, both male and female, and all women, both minority and non-minority. Consequently, the Contractor may be in violation of the Executive Order if a particular group is employed in a substantially disparate manner (for example, even though the Contractor has achieved its goals for women generally, the Contractor may be in violation of the Executive Order if a specific minority group of women is underutilized).

10. The Contractor shall not use the goals and timetables or affirmative action standards to discriminate against any person because of race, color, religion, sex, or national origin.

11. The Contractor shall not enter into any Subcontract with any person or firm debarred from Government contracts pursuant to Executive Order 11246.

12. The Contractor shall carry out such sanctions and penalties for violation of these specifications and of the Equal Opportunity Clause, including suspension, termination and cancellation of existing subcontracts as may be imposed or ordered pursuant to Executive Order 11246, as amended, and its implementing regulations, by the Office of Federal Contract Compliance Programs. Any Contractor who fails to carry out such sanctions and penalties shall be in violation of these specifications and Executive Order 11246, as amended.

13. The Contractor, in fulfilling its obligations under these specifications, shall implement specific affirmative action steps, at least as extensive as those standards prescribed in paragraph 7 of these specifications, so as to achieve maximum results from its efforts to ensure equal employment opportunity. If the Contractor fails to comply with the requirements of the Executive Order, the implementing regulations, or these specifications, the Director shall proceed in accordance with 41 CFR 60-4.8.

14. The Contractor shall designate a responsible official to monitor all employment related activity to ensure that the company EEO policy is being carried out, to submit reports relating to the provisions hereof as may be required by the Government and to keep records. Records shall at least include for each employee the name, address, telephone numbers, construction trade, union affiliation if any, employee identification number when assigned, social security number, race, sex, status (e.g., mechanic, apprentice trainee, helper, or laborer), dates of changes in status, hours worked per week in the indicated trade, rate of pay, and locations at which the work was performed. Records shall be maintained in an easily understandable and retrievable form; however, to the degree that existing records satisfy this requirement, contractors shall not be required to maintain separate records.

15. Nothing herein provided shall be construed as a limitation upon the application of other laws which establish different standards of compliance or upon the application of requirements for the hiring of local or other area residents (e.g., those under the Public Works Employment Act of 1977 and the Community Development Block Grant Program).

1.4 Federal Labor Standards Provisions. The following definitions apply to this section.

The term **"Secretary"** includes the Secretary of Labor, the Deputy Under Secretary for Employment Standards, and their authorized representatives.

The term **"Administrator"** means the Administrator of the Wage and Hour Division, Employment Standards Administration, U.S. Department of Labor, or authorized representative.

The **"Bureau of Reclamation"** is the agency of the United States which provides assistance to the project.

The term **"labor standards"** as used in this part means the requirements of the Davis-Bacon Act, the Contract Work Hours and Safety Standards Act, and the prevailing wage provisions of the other statutes listed in Sec. 29 CFR 5.1., and the regulations in 29 CFR. parts 1 and 3.

The term **"United States"** or the **"District of Columbia"** means the United States, the District of Columbia, and all executive departments, independent establishments, administrative agencies, and instrumentalities of the United States and of the District of Columbia, including corporations, all or substantially all of the stock of which is beneficially owned by the United States, by the foregoing departments, establishments, agencies, instrumentalities, and including nonappropriated fund instrumentalities.

The term **"contract"** means any prime contract which is subject wholly or in part to the labor standards provisions of any of the acts listed in 29 CFR 5.1 and any subcontract of any tier thereunder, let under the prime contract. A State or local Government is not regarded as a contractor under statutes providing loans, grants, or other Federal assistance in situations where construction is performed by its own employees. However under statutes requiring payment of prevailing wages to all laborers and mechanics employed on the assisted project, such as the U.S. Housing Act of 1937, State and local recipients of Federal-aid must pay these employees according to Davis-Bacon labor standards.

The terms **"building"** or **"work"** generally include construction activity as distinguished from manufacturing, furnishing of materials, or servicing and maintenance work. The terms include without limitation, building structures, and improvements of all types, such as bridges, dams, plants, highways, parkways, streets, subways, tunnels, sewers, mains, power lines, pumping stations, heavy generators, railways, airports, terminals, docks, piers, wharves, ways, lighthouse, buoys, jetties, breakwaters, levees, canals, dredging, shoring, rehabilitation and reactivation of plants, scaffolding, drilling, blasting, excavating, clearing and landscaping. The manufacture or furnishing of materials, articles, supplies or equipment (whether or not a Federal or State agency acquires title to such materials, articles, supplies, or equipment during the course of the manufacture or furnishing, or owns the materials from which they are manufactured or furnished) is not a **"building"** or **"work"** within the meaning of this Section 11.4 unless conducted in connection with and at the site of such a building or work as is described in the foregoing sentence, or under the United States Housing Act of 1937 and the Housing Act of 1949 in the construction or development of the project.

The terms **"construction," "prosecution," "completion,"** or **"repair"** mean the following:

(1) All types of work done on a particular building or work at the site thereof, including work at a facility which is dedicated to and deemed a part of the site of the work within the meaning of section 29 CFR Sec. 5.2(1) by laborers and mechanics employed by a construction contractor or construction subcontractor (or, under the United States Housing Act of 1937 and the Housing Act of 1949, all work done in the construction or development of the project), including without limitation –

(i) Altering, remodeling, installation (where appropriate) on the site of the work of items fabricated off-site;

(ii) Painting and decorating;

(iii) Manufacturing or furnishing of materials, articles, supplies or equipment on the site of the building or work (or, under the United States Housing Act of 1937 and the Housing Act of 1949, in the construction or development of the project); and

(iv) Transportation between the actual construction location and a facility which is dedicated to such construction and deemed a part of the site of the work within the meaning of 29 CFR Sec. 5.2.(1).

(2) Except for the laborers and mechanics employed in the construction or development of the project under the United States Housing Act of 1937 and the Housing Act of 1949, and except as provided in paragraph (h)(1)(iv) of this subsection, the transportation of materials or supplies to or from the building or work by employees of the construction contractor or construction subcontractor is not "construction" (etc.) (see Building and Construction Trades Department, AFL-CIO v. United States Department of Labor Wage Appeals Board (Midway Excavators, Inc.,), 932 F.2d 985 (D.C. Cir. 1991)).

The term **"public building"** or **"public work"** includes building or work, the construction, prosecution, completion, or repair of which, as defined above, is carried on directly by authority of or with funds of a Federal agency to serve the interest of the general public regardless of whether title thereof is in a Federal agency.

The term **"site of the work"** is defined as follows:

(1) The site of the work is limited to the physical place or places where the construction called for in the contract will remain when work on it has been completed and, as discussed in paragraph (j)(2) of this subsection, other adjacent or nearby property used by the contractor or subcontractor in such construction which can reasonably be said to be included in the site.

(2) Except as provided in paragraph (j) (3) of this subsection, fabrication plants, mobile factories, batch plants, borrow pits, job headquarters, tool yards, etc., are part of the site of the work provided they are dedicated exclusively, or nearly so, to performance of the contract or project, and are so located in proximity to the actual construction location that it would be reasonable to include them.

(3) Not included in the site of the work are permanent home offices, branch plant establishments, fabrication plants, and tool yards of a contractor or subcontractor whose locations and continuance in operation are determined wholly without regard to a particular Federal or federally assisted contractor or project. In addition, fabrication plants, batch plants, borrow pits, job headquarters, tool yards, etc., of a commercial supplier or materialman which are established by a supplier of materials for the project before opening of bids and not on the project site, are not included in the site of the work. Such permanent, previously established

facilities are not a part of the site of the work, even where the operations for a period of time may be dedicated exclusively, or nearly so, to the performance of a contract.

The term **"labor"** or **"mechanic"** includes at least those workers whose duties are manual or physical in nature (including those workers who use tools or who are performing the work of a trade), as distinguished from mental or managerial. The term laborer or mechanic includes apprentices, trainees, helpers, and, in the case of contracts subject to the Contract Work Hours and Safety Standards Act, watchmen or guards. The term does not apply to workers whose duties are primarily administrative, executive, r clerical rather than manual. Persons employed in a bonafide executive administrative, or professional capacity as defined in part 541 of Title 29 not deemed to be laborers or mechanics. Working foremen who devote more than 20 percent of their time during a workweek to mechanic or laborer duties, and who do not meet the criteria of part 541, are laborers and mechanics for the time so spent.

The terms **"apprentice," "trainee,"** and **"helper"** are defined as follows:

(1) Apprentice means (i) a person employed and individually registered in a bona fide apprenticeship program registered with the U.S. Department of Labor, Employment and Training Administration, Bureau of Apprenticeship and Training, or with a State Apprenticeship Agency recognized by the Bureau, or (ii) a person in the first 90 days of probationary employment as an apprentice in such an apprenticeship program, who is not individually registered in the program, but who has been certified by the Bureau of Apprenticeship and Training or a State Apprenticeship Agency (where appropriate) to be eligible for probationary employment as an apprentice;

(2) Trainee means a person registered and receiving on-the-job training in a construction occupation under a program which has been approved in advance by the U.S. Department of Labor, Employment and Training Administration, as meeting its standards for on-the-job training programs and which has been so certified by that Administration.

(3) These provisions do not apply to apprentices and trainees employed on projects subject to 23 U.S.C. 113 who are enrolled in programs which have been certified by the Secretary of Transportation in accordance with 23 U.S.C. 113(c).

(4) A helper is a semi-skilled worker (rather than a skilled journeyman mechanic) who works under the direction of and assists a journeyman. Under the journeyman's direction and supervision, the helper performs a variety of duties to assist the journeyman such as preparing, carrying and furnishing materials, tools, equipment, and supplies and maintaining them in order; cleaning and preparing work areas; lifting, positioning, and holding materials or tools; and other related, semi-skilled tasks as directed by the journeyman. A helper may use tools of the trade at and under the direction and supervision of the journeyman. The particular duties performed by a helper vary according to area practice.

Every person performing the duties of a laborer or mechanic in the construction, prosecution, completion, or repair of a public building or public work, or building or work financed in whole or in part by loans, grants, or guarantees from the United States is

"employed" regardless of any contractual relationship alleged to exist between the contractor and such person.

The term **"wages"** means the basic hourly rate of pay; any contribution irrevocably made by a contractor or subcontractor to a trustee or to a third person pursuant to a bona fide fringe benefit fund, plan, or program; and the rate of costs to the contractor or subcontractor which may be reasonably anticipated in providing bona fide fringe benefits to laborers and mechanics pursuant to an enforceable commitment to carry out a financially responsible plan of program, which was communicated in writing to the laborers and mechanics affected. The fringe benefits enumerated in the Davis-Bacon Act include medical or hospital care, pensions on retirement or death, compensation for injuries or illness resulting from occupational activity, or insurance to provide any of the foregoing; unemployment benefits; life insurance, disability insurance, sickness insurance, or accident insurance; vacation or holiday pay; defraying costs of apprenticeship or other similar programs; or other bona fide fringe benefits. Fringe benefits do not include benefits required by other Federal, State, or local law.

The term **"wage determination"** includes the original decision and any subsequent decisions modifying, superseding, correcting, or otherwise changing the provisions of the original decision. The application of the wage determination shall be in accordance with the provisions of Sec. 1.6 of this title. [48 FR 19541, Apr. 29, 1983, as amended at 48 FR 50313, Nov. 1, 1983; 55 FR 50149, Dec. 4, 1990; 57 FR 19206, May 4, 1992]

(a) The Project to which the construction work covered by this Contract pertains is being federally assisted and the following Federal Labor Standard provisions are included in this Contract pursuant to the provisions applicable to such federal assistance.

(1) **Prevailing Wage Rates**. In accordance with the provisions of Division 2, Part 7, Chapter 1, of the California Labor Code, and 29 CFR 5.5(a) of the Code of Federal Regulations (Davis-Bacon Act), the California Department of Industrial relations and the U.S. Secretary of Labor have established the general prevailing rates of per diem wages for each craft, classification and type of work needed to execute contracts for public works and improvements. Current prevailing rates of per diem wages may be found at http://www.gpo.gov/davisbacon/ca.html (federal) and http://www.dir.ca.gov/dlse/dlsePublicWorks.html (state). As the new wage rates shall become effective they shall apply to this contract in the same manner as if they had been included or referenced in this contract. If there is a difference in the Federal minimum wage rates and the California Department of Industrial Relations wage rates for similar classifications of labor, the contractor and its subcontractors shall pay not less than the higher wage rate. The wage rate for any classification not listed by the Federal Department of Labor or the California Department of Industrial Relations, but which may be required to execute the proposed contract, shall be in accord with specified rates for similar or comparable classifications or for those performing similar or comparable duties, within the agencies' determinations, or shall be determined pursuant to applicable regulatory processes for such determination. The Contractor shall post a copy of both State and Federal wage rates at each job site at a location readily available to the workers.

(2) Minimum wages.

(i) All laborers and mechanics employed or working upon the site of the work (or under the United States Housing act of 1937 or under the Housing Act of 1949 in the construction or development of the project), will be paid unconditionally and not less often than once a week, and without subsequent deduction or rebate on any account (except such payroll deductions as are permitted by regulations issued by the Secretary of Labor under the Copeland Act (29 CFR part 3)), the full amount of wages and bona fide fringe benefits (or cash equivalents thereof) due at time of payment computed at rates not less than those contained in the wage determination of the Secretary of Labor which is attached hereto and made a part hereof, regardless of any contractual relationship which may be alleged to exist between the contractor and such laborers and mechanics.

Contributions made or costs reasonably anticipated for bona fide fringe benefits under section 1(b)(2) of the Davis-Bacon Act on behalf of laborers or mechanics are considered wages paid to such laborers or mechanics, subject to the provisions of paragraph (a)(1)(iv) of this section; also, regular contributions made or costs incurred for more than a weekly period (but not less often than quarterly) under plans, funds, or programs which cover the particular weekly period, are deemed to be constructively made or incurred during such weekly period. Such laborers and mechanics shall be paid the appropriate wage rate and fringe benefits on the wage determination for the classification of work actually performed, without regard to skill, except as provided in 29 CFR Part 5.5(a)(4). Laborers or mechanics performing work in more than one classification may be compensated at the rate specified for each classification for the time actually worked therein: Provided, that the employer's payroll records accurately set forth the time spent in each classification in which work is performed. The wage determination (including any additional classification and wage rates conformed under paragraph (a)(1)(ii) of this section) and the Davis-Bacon poster (WH-1321) shall be posted at all times by the contractor and its subcontractors at the site of the work in a prominent and accessible place where it can be easily seen by the workers.

(ii) (A) Any class of laborers or mechanics, including helpers, which is not listed in the wage determination and which is to be employed under the contract shall be classified in conformance with the wage determination. The Bureau of Reclamation or its designee shall approve an additional classification and wage rate and fringe benefits therefore only when the following criteria have been met:

(1) Except with respect to helpers as defined in 29 CFR 5.2(n)(4), the work to be performed by the classification requested is not performed by a classification in the wage determination; and

(2) The classification is utilized in the area by the construction industry; and

(3) The proposed wage rate, including any bona fide fringe benefits, bears a reasonable relationship to the wage rates contained in the wage determination; and

(4) With respect to helpers as defined in 29 CFR 5.2(n)(4), such a classification prevails in the area in which the work is performed.

(B) If the contractor and the laborers mechanics to be employed in the classification (if known), or their representatives, and the Bureau of Reclamation or its designee agree on the classification and wage rate (including the amount designated for fringe benefits where appropriate), a report of the action taken shall be sent by the Bureau of Reclamation or its designee to the Administrator of the Wage and Hour Division, Employment Standards Administration, U.S. Department of Labor, Washington, DC 20210. The Administrator, or an authorized representative, will approve, modify, or disapprove every additional classification action within 30 days of receipt and so advise the Bureau of Reclamation or its designee or will notify the Bureau of Reclamation or its designee within the 30-day period that additional time is necessary.

(C) In the event the contractor, the laborers or mechanics to be employed in the classification or their representatives, and the Bureau of Reclamation or its designee do not agree on the proposed classification and wage rate (including the amount designated for fringe benefits, where appropriate), the Bureau of Reclamation or its designee shall refer the questions, including the views of all interested parties and the recommendation of the Bureau of Reclamation or its designee, to the Administrator for determination. The Administrator, or an authorized representative, will issue a determination within 30 days of receipt and so advise the Bureau of Reclamation or its designee or will notify the Bureau of Reclamation or its designee within the 30-day period that additional time is necessary.

(D) The wage rate (including fringe benefits where appropriate) determined pursuant to paragraphs (a)(1)(ii) (B) or (C) of this section, shall be paid to all workers performing work in the classification under this contract from the first day on which work is performed in the classification.

(iii) Whenever the minimum wage rate prescribed in the contract for a class of laborers or mechanics includes a fringe benefit which in not expressed as an hourly rate, the contractor shall either pay the benefit as stated in the wage determination or shall pay another bona fide fringe benefit or an hourly cash equivalent thereof.

(iv) If the contractor does not make payments to a trustee or other third person, the contractor may consider as part of the wages of any laborer or mechanic the amount of any costs reasonably anticipated in providing bona fide fringe benefits under a plan or program, Provided, That the Secretary of Labor has found, upon the written request of the contractor, that the applicable standards of the Davis-Bacon Act have been met. The Secretary of Labor may require the contractor to set aside in a separate account assets for the meeting of obligations under the plan or program.

(3) Withholding. The Bureau of Reclamation or Calleguas shall upon its own action or upon written request of an authorized representative of the Department of Labor withhold or cause to be withheld from the contractor under this contract or any other Federal contract with the same prime contractor, or any other federally-assisted contract subject to Davis-Bacon prevailing wage requirements, which is held by the same prime contractor so much of the

accrued payments or advances as may be considered necessary to pay laborers and mechanics, including apprentices, trainees, and helpers, employed by the contractor or any subcontractor the full amount of wages required by the contract. In the event of failure to pay any laborer or mechanic, including any apprentice, trainee, or helper, employed or working on the site of the work (or under the United States Housing Act of 1937 or under the Housing Act of 1949 in the construction or development of the project), all or part of the wages required by the contract, the Bureau of Reclamation or its designee may, after written notice to the contractor, sponsor, applicant, or owner, take such action as may be necessary to cause the suspension of any further payment, advance, or guarantee of funds until such violations have ceased.

(4) Payrolls and basic records.

(i) Payrolls and basic records relating thereto shall be maintained by the contractor during the course of the work and preserved for a period of three years thereafter for all laborers and mechanics working at the site of the work (or under the United States Housing Act of 1937, or under the Housing Act of 1949, in the construction or development of the project). Such records shall contain the name, address, and social security number of each such worker, his or her correct classification, hourly rates of wages paid (including rates of contributions or costs anticipated for bona fide fringe benefits or cash equivalents thereof of the types described in section 1(b)(2)(B) of the Davis-Bacon Act), daily and weekly number of hours worked, deductions made and actual wages paid. Whenever the Secretary of Labor has found under 29 CFR 5.5(a)(1)(iv) that the wages of any laborer or mechanic include the amount of any costs reasonably anticipated in providing benefits under a plan or program described in section 1(b)(2)(B) of the Davis-Bacon Act, the contractor shall maintain records which show that the commitment to provide such benefits is enforceable, that the plan or program is financially responsible, and that the plan or program has been communicated in writing to the laborers or mechanics affected, and records which show the costs anticipated or the actual cost incurred in providing such benefits. Contractors employing apprentices or trainees under approved programs shall maintain written evidence of the registration of apprenticeship programs and certification of trainee programs, the registration of the apprentices and trainees, and the ratios and wage rates prescribed in the applicable programs.

(ii) (A) The contractor shall submit weekly for each week in which any contact work is performed a copy of all payrolls to Calleguas for transmission to the Bureau of Reclamation or its designee. The payrolls submitted shall set out accurately and completely all of the information required to be maintained under 29 CFR part 5.5(a) (3)(i) [part (a)(3)(i) of this section 11.4]. This information may be submitted in any form desired. Optional Form WH-347 is available for this purpose from the Wage and Hour Division Web site at http://www.dol.gov/esa/whd/forms/wh347instr.htm or its successor site. The prime contractor is responsible for the submission of 6 copies of payrolls by all subcontractors. Contractors and subcontractors shall maintain the full social security number and current address of each covered worker, and shall provide them upon request to Calleguas or the Wage and Hour Division of the Department of Labor for purposes of an investigation or audit of compliance with prevailing wage requirements. It is not a violation of this section for a prime contractor to require a subcontractor to provide addresses and social security numbers to the prime contractor for its own records, without weekly submission to Calleguas.

(B) Each payroll submitted shall be accompanied by a "Statement of Compliance" signed by the contractor or subcontractor or his or her agent who pays or supervises the payment of the persons employed under the contract and shall certify the following:

(1) That the payroll for the payroll period contains the information required to be maintained under 29 CFR part 5.5(a)(3)(i) of Regulations and that such information is correct and complete;

(2) That each laborer or mechanic (including each helper, apprentice, and trainee) employed on the contract during the payroll period has been paid the full weekly wages earned, without rebate, either directly or indirectly, and that no deductions have been made either directly or indirectly from the full wages earned, other than permissible deductions as set forth in Regulations, 29 CFR part 3;

(3) That each laborer or mechanic has been paid not less than the applicable wage rates and fringe benefits or cash equivalents for the classification of work performed, as specified in the applicable wage determination incorporated into the contract.

(C) The weekly submission of a properly executed certification set forth on the reverse side of Optional Form WH-347 shall satisfy the requirement for submission of the "Statement of Compliance" required by paragraph (a) (3)(ii) (B) of this section.

(D) The falsification of any of the above certifications may subject the contractor or subcontractor to civil or criminal prosecution under section 1001 of title 18 and section 231 of title 31 of the United States Code.

(iii) The contractor or subcontractor shall make the records required under paragraph (a)(4)(i) of this section available for inspection, copying, or transcription by authorized representatives of Calleguas, the Bureau of Reclamation, the Department of Labor, or their respective designees, and shall permit such representatives to interview employees during working hours on the job. If the contractor or subcontractor fails to submit the required records or to make them available, the Bureau of Reclamation or its designee may, after written notice to the contractor, or Calleguas, take such action as may be necessary to cause the suspension of any further payment or advance. Furthermore, failure to submit the required records upon request or to make such records available may be grounds for debarment action pursuant to 29 CFR 5.12.

(5) Apprentices and trainees—

(i) Apprentices. Apprentices will be permitted to work at less than the predetermined rate for the work they performed when they are employed pursuant to and individually registered in a bona fide apprenticeship program registered with the U.S. Department of Labor, Employment and Training Administration, Bureau of Apprenticeship and Training, or with a State Apprenticeship Agency recognized by the Bureau, or if a person is employed in his or her first 90 days of probationary employment as an apprentice in such an

apprenticeship program, who is not individually registered in the program, but who has been certified by the Bureau of Apprenticeship and Training or a State Apprenticeship Agency (where appropriate) to be eligible for probationary employment as an apprentice. The allowable ratio of apprentices to journeymen on the job site in any craft classification shall not be greater than the ratio permitted to the contractor as to the entire work force under the registered program. Any worker listed on a payroll at an apprentice wage rate, who is not registered or otherwise employed as stated above, shall be paid not less than the applicable wage rate on the wage determination for the classification of work actually performed. In addition, any apprentice performing work on the job site in excess of the ratio permitted under the registered program shall be paid not less than the applicable wage rate on the wage determination for the work actually performed. Where a contractor is performing construction on a project in a locality other than that in which its program is registered, the ratios and wage rates (expressed in percentages of the journeyman's hourly rate) specified in the contractor's or subcontractor's registered program shall be observed. Every apprentice must be paid at not less than the rate specified in the registered program for the apprentice's level of progress, expressed as a percentage of the journeymen hourly rate specified in the applicable wage determination. Apprentices shall be paid fringe benefits in accordance with the provisions of the apprenticeship program. If the apprenticeship program does not specify fringe benefits, apprentices must be paid the full amount of fringe benefits listed on the wage determination for the applicable classification. If the Administrator determines that a different practice prevails for the applicable apprentice classification, fringes shall be paid in accordance with that determination. In the event the Bureau of Apprenticeship and Training, or a State Apprenticeship Agency recognized by the Bureau, withdraws approval of an apprenticeship program, the contractor will no longer be permitted to utilize apprentices at less than the applicable predetermined rate for the work performed until an acceptable program is approved.

(ii) Trainees. Except as provided in 29CFR 5.16, trainees will not be permitted to work at less than the predetermined rate for the work performed unless they are employed pursuant to and individually registered in a program which has received prior approval, evidenced by formal certification by the U.S. Department of Labor, Employment and Training Administration. The ratio of trainees to journeymen on the job site shall not be greater than permitted under the plan approved by the Employment and Training Administration. Every trainee must be paid at not less than the rate specified in the approved program for the trainee's level of progress, expressed as a percentage of the journeyman hourly rate specified in the applicable wage determination. Trainees shall be paid fringe benefits in accordance with the provisions of the trainee program. If the trainee program does not mention fringe benefits, trainees shall be paid the full amount of fringe benefits listed on the wage determination unless the Administrator of the Wage and Hour Division determines that there is an apprenticeship program associated with the corresponding journeyman wage rate on the wage determination which provides for less than full fringe benefits for apprentices. Any employee listed on the payroll at a trainee rate who is not registered and participating in a training plan approved by the Employment and Training Administration shall be paid not less than the applicable wage rate on the wage determination for the classification of work actually performed. In addition, any trainee performing work on the job site in excess of the ratio permitted under the registered program shall be paid not less than the applicable wage rate on the wage determination for the work actually performed. In the event the Employment and Training Administration withdraws approval of a training program the contractor will no

longer be permitted to utilize trainees at less than the applicable predetermined rate for the work performed until an acceptable program is approved.

(iii) Equal employment opportunity. The utilization of apprentices, trainees and journeymen under this part shall be in conformity with the equal employment opportunity requirements of Executive Order 11246, as amended, and 29 CFR 30.

(6) Compliance with Copeland Act requirements. The contractor shall comply with the requirements of 29 CFR part 3, which are incorporated by reference in this contract.

(7) Subcontracts. The contractor or subcontractor shall insert in any subcontracts the clauses contained in 29 CFR 5.5(a) (1) through (10) these [these clauses are sections (a)(1) through (c)10 of this section 10.4 "Federal Labor Standards Provisions"] and such other clauses as the Bureau of Reclamation or its designee may by appropriate instructions require, and also a clause requiring the subcontractors to include these clauses in any lower tier subcontracts. The prime contractor shall be responsible for the compliance by any subcontractor or lower tier subcontractor with all the contract clauses in 29 CFR 5.5.

(8) Contract termination: debarment. A breach of the contract clauses in 29CFR 5.5 may be grounds for termination of the contract, and for debarment as a contractor and a subcontractor as provided in 29 CFR 5.12.

(9) Compliance with Davis-Bacon and Related Act Requirements. All rulings and interpretations of the Davis-Bacon and Related Acts contained in 29 CFR parts 1,3, and 5 are herein incorporated by reference in this contract.

(10) Disputes concerning labor standards. Disputes arising out of the labor standards provisions of this contract shall not be subject to the general disputes clause of this contract. Such disputes shall be resolved in accordance with the procedures of the Department of Labor set forth in 29 CFR parts 5, 6, and 7. Disputes within the meaning of this clause include disputes between the contractor (or any of its subcontractors) and the contracting agency, the U.S. Department of Labor, or the employees or their representatives.

(11) Certification of eligibility.

(i) By entering into this contract, the contractor certifies that neither it (nor he or she) nor any person or firm who has an interest in the contractor's firm is a person or firm ineligible to be awarded Government contracts by virtue of section 3(a) of the Davis-Bacon Act or 29 CFR 5.12(a)(1).

(ii) No part of this contract shall be subcontracted to any person or firm ineligible for award of a Government contract by virtue of section 3(a) of the Davis-Bacon Act or 29 CFR 5.12(a) (1).

(iii) The penalty for making false statements is prescribed in the U.S. Criminal Code, 18 U.S.C. 1001.

(b) Contract Work Hours and Safety Standards Act. This paragraph applies to contracts and subcontracts in excess of $100,000. As used in this paragraph b, the terms laborers and mechanics include watchmen and guards.

(1) Overtime requirements. No contractor or subcontractor contracting for any part of the contract work which may require or involve the employment of laborers or mechanics shall require or permit any such laborer or mechanic in any workweek in which he or she is employed on such work to work in excess of forty hours in such workweek unless such laborer or mechanic receives compensation at a rate not less than one and one-half times the basic rate of pay for all hours worked in excess of forty hours in such workweek.

(2) Violation; liability for unpaid wages; liquidated damages. In the event of any violation of the clause set forth in paragraph (b)(1) of this section the contractor and any subcontractor responsible therefor shall be liable for the unpaid wages. In addition, such contractor and subcontractor shall be liable to the United States (in the case of work done under contract for the District of Columbia or a territory, to such District or to such territory), for liquidated damages. Such liquidated damages shall be computed with respect to each individual laborer or mechanic, including watchmen and guards, employed in violation of the clause set forth in paragraph (b) (1) of this section, in the sum of $10 for each calendar day on which such individual was required or permitted to work in excess of the standard workweek of forty hours without payment of the overtime wages required by the clause set forth in paragraph (b)(1) of this section.

(3) Withholding for unpaid wages and liquidated damages. The Bureau of Reclamation or its designee shall upon its own action or upon written request of an authorized representative of the Department of Labor withhold or cause to be withheld, from any moneys payable on account of work performed by the contractor or subcontractor under any such contract or any other Federal contract with the same prime contractor, or any other federally-assisted contract subject to the Contract Work Hours and Safety Standards Act which is held by the same prime contractor, such sums as may be determined to be necessary to satisfy any liabilities of such contractor or subcontractor for unpaid wages and liquidated damages as provided in the clause set forth in paragraph (b)(2) of this section.

(4) Subcontracts. The contractor or subcontractor shall insert in any subcontracts the clauses set forth in paragraph (b) (1) through (4) of this section and also a clause requiring the subcontractors to include these clauses in any lower tier subcontracts. The prime contractor shall be responsible for compliance by any subcontractor or lower tier subcontractor with the clauses set forth in paragraphs (b) (1) through (4) of this section.

1.5 Federal Safety and Health Provisions.

1. No Contractor or subcontractor for any part of the contract work shall require any laborer or mechanic employed in the performance of the contract to work in surroundings or under working conditions which are unsanitary, hazardous, or dangerous to his or her health or safety as determined under construction safety and health standards promulgated by the Secretary of Labor by regulations found at Title 29 of the Code of Federal Regulations Part 1926.

2. The Contractor shall comply with all regulations issued by the Secretary of Labor pursuant to Title 29 Part 1926 and failure to comply may result in the imposition of sanctions pursuant to he contract Work Hours and Safety Standards Act (Public Law 91-54, 83 Stat. 96) including, but not limited to, contract termination and debarment from work on Federal or Federally Assisted contracts.

2.1 Accident Prevention Responsibilities.

(1) It shall be the responsibility of the Contractor/employer and subcontractor/employer to initiate and maintain such programs as may be necessary to comply with 29 CFR 1926.

(2) Such programs shall provide for frequent and regular inspections of the job sites, materials, and equipment to be made by competent persons designated by the employers.

(3) The use of any machinery, tool, material, or equipment which is not incompliance with any applicable requirement of this part is prohibited. Such machine, tool, material, or equipment shall either be identified as unsafe by tagging or locking the controls to render them inoperable or shall be physically removed from its place of operation.

(4) The employer shall permit only those employees qualified by training or experience to operate equipment and machinery.

2.2 Standards.

(1) If a particular standard promulgated by the Secretary of Labor is applicable to a condition, practice, means, method, operation, or process, it shall prevail over any different general standard, condition, practice, means, method, operation, or process.

(2) On the other hand, any standard shall apply according to its terms to any employment and place of employment in any industry, even though particular standards are also prescribed for the industry to the extent that none of such particular standards applies.

(3) In the event a standard protects on its face a class of persons larger than employees, the standard shall be applicable under this section only to employees and their employment and places of employment.

3. The Contractor shall include the provisions of this Section in every subcontract so that such provisions will be binding on each subcontractor. The Contractor shall take such action with respect to any subcontract as the Bureau of Reclamation or the Secretary of Labor shall direct as a means of enforcing such provisions.

1.6 Miscellaneous Provisions.

1. The Contractor shall comply with the Copeland "Anti-Kickback" Act (18 U.S.C. 874) as supplemented in Department of Labor regulations (29 CFR Part 3).

2. General Conditions Sections 9.12.3 and 9.12.4 are amended to read:

9.12.3. Right to Audit. Calleguas, the Comptroller General of the United States, or their designees have the right to conduct audits of books and records of the Contractor and Subcontractors that relate to the Work. Calleguas, the Comptroller General of the United States, or their designees have the right to audit all costs and accounting information including, without limitation, books, documents, logs, and records (including electronic media) of the Contractor and its Subcontractors relating to this Contract or to the construction of the Work.

9.12.4. Contractor to Provide Access Upon 24 Hours Notice. Upon twenty-four (24) hours advance, written notice, Calleguas, the Comptroller General of the United States, or their designees shall have access to these records and all other evidence for the purpose of inspection, audit, and copying during normal business hours. The Contractor shall provide proper facilities for such access, inspection, and copying purposes.

SPECIFICATIONS

SPECIAL CONDITIONS

1-01. Requirements.

a. Work to be Done. The Work to be done under these Specifications consists of furnishing all labor, equipment, appliances, and materials and of performing all operations in connection with the construction of the Salinity Management Pipeline, Phase 2A. The Work involves furnishing all labor, equipment, materials and incidentals for construction of a 30-inch diameter welded steel or 32-inch HDPE pipeline and appurtenances.

The Work includes, but is not necessarily limited to:

- Earthwork, including excavation, trenching, dewatering, shoring, backfill and compaction.
- Utility investigation and potholing.
- Installation and testing of:
  - approximately 12,200 linear feet of 30-inch diameter welded steel or 32-inch diameter HDPE pipe.
  - approximately 441 linear feet of 32-inch HDPE pipe inside 3 casings.
  - three 42-inch-diameter steel casings.
  - associated appurtenances.
- Installation of manholes, valves, blow-offs, and automatic vacuum and air release valve assemblies.
- Asphalt pavement, including sawcutting, removal and replacement.
- Asphalt overlay.
- Traffic control.
- Street striping and pavement marking.

All Work shall be complete, in strict accordance with the Drawings and Specifications and subject to the terms and conditions of the Contract Documents.

b. Location. The proposed work site is generally located along Old Lewis Road and New Lewis, loosely bound by Hueneme Road to the south and Cawelti Road to the north within an unincorporated area within the County of Ventura, California.

1-02. Completion of Work and Liquidated Damages for Delays.

It will be impractical or extremely difficult to fix the actual damages that may result from any delays in completion of the Work or any specified segments of the Work beyond the Fixed Calendar Dates or Times for Completion. Failure to complete the Work within the time specified will subject the Contractor to payment to the District of liquidated damages. It is therefore stipulated and agreed that if all Work or any segment of the Work is not completed within the Fixed Calendar Dates or Times for Completion shown in the following table, or within

such extensions of time as may be granted, the Contractor shall pay to the Owner in accordance with the provisions of the General Conditions, as agreed, fixed and liquidated damages for each Calendar Day's delay or fraction thereof until said work is satisfactorily completed or until the District may reasonably procure the completion thereof by another contractor, or complete the same itself, in the amounts shown in the following table:

Work to be Completed	**Times for Completion or Fixed Calendar Date for Completion**	**Liquidated Damages if Work is Not Completed within Time for Completion or by Fixed Calendar Date for Completion**
Completion of all work	250 Calendar Days after Notice to Proceed	$3,400 per Calendar Day
Four week Schedule (per Specifications Section 01310) [(1)]	Every Friday by 4 p.m. (If Friday is a holiday, the Schedule shall be due by the following Monday)	$500 per Calendar Day or any portion thereof
Traffic Control Photos (per Specifications Section 02990) [(1)]	Every Monday by 4 p.m. when work involving traffic control is underway. (If Monday is a holiday, the photos shall be due by the following Tuesday)	$250 per Calendar Day or any portion thereof

[(1)] If Calleguas does not withhold Liquidated Damages in one or more weeks or months, as applicable, it still reserves the right to do so in any subsequent week or month if the item is not submitted as required.

Said liquidated damages do not include all those which may be imposed by other government agencies. Liquidated damages imposed by other agencies, if any, shall be withheld by the District from amounts due to the Contractor. Specific work hours and allowed days of work are specified in Paragraph 1-03 and shown on the Drawings.

1-03. <u>No Work Days.</u>

For any construction work occurring between 7:00 p.m. and 6:00 a.m. (night work) or Saturday and Sunday, the Contractor must provide Calleguas with notice at least four Working Days in advance. Failure to do so will result in the Contractor being prohibited from working during the requested time.

No construction work on any portion of the project, except traffic control maintenance and flaggers, will be allowed on the following days:

- Memorial Day
- Independence Day
- Labor Day

- Thanksgiving Day
- Day after Thanksgiving
- Christmas Day
- New Year's Day

When any of the holidays listed above falls on a Saturday, the Friday before shall be the observed holiday; when it falls on a Sunday, the Monday after shall be the observed holiday.

1-04. Groundwater and Surface Water.

a. Groundwater and surface water are expected to be present in the vicinity of the Work. The Contractor's attention is directed to the presence of high groundwater throughout the limits of the project. The permit for disposal of water removed from excavations during dewatering operations is described in Paragraph 1-05. Any expected or anticipated flows included within any permits included with these Contract Documents were provided to the applicable regulatory agency(ies) for purposes of obtaining necessary permits only, and are not to be used by the Contractor for purposes of determining the level and extent of any groundwater or surface water. The Contractor shall determine, through his own efforts and in accordance with the Contract Documents, the level and extent of such water and shall assume all responsibility for the deductions and conclusions as to the effect that such water will have upon the Work.

b. The Contractor shall be responsible for controlling all surface and subsurface water at stream crossings or other areas where water is encountered. All trenches and excavations shall be dewatered to maintain a water level at least six (6) inches below the level of the trench bottom. All costs of groundwater and surface water control and handling required to satisfactorily complete the Work shall be included in the bid items listed in the Bid Schedule. For detailed requirements, see these Specifications including Section 02140 and the NPDES trench dewatering permit in Appendix C.

1-05. Permits and Licenses.

a. Any permits, bonds, and licenses required for the performance of the Work under this Contract and not specifically mentioned herein as having been obtained by the District shall be obtained by the Contractor, including, but not limited to a County of Ventura business licenses and those required for trenching under Section 6500 of the State Labor Code. The Contractor shall pay all fees for any permits, bonds, and licenses that he is required to obtain and he shall comply with the requirements thereof and with all applicable requirements of the Owner's permits.

b. The Contractor shall, within two weeks of obtaining the Notice to Proceed, contact and coordinate with all agencies for which a permit is required to ensure adequate time is given to obtaining the permit(s), including time for reviews, modifications, processing, etc. No extra time or compensation will be due the Contractor for his failure to obtain any required permits to perform the Work.

c. One copy of each permit obtained by the Contractor shall be submitted to the Owner for the Owner's records.

d. In all cases of differing requirements between these Specifications, permits and licenses, the Contractor is required to comply with the most restrictive requirements and regulations.

e. The Contractor shall comply with all requirements of public agencies for notifications, protective signs, and other construction conditions. The requirements of these jurisdictional agencies are hereby incorporated into the Contract Documents by reference. Where the requirements of these jurisdictional agencies differ from the requirements contained in these Specifications or the Drawings, the more restrictive shall govern.

f. The Contractor shall, at his own expense, and if required by the permitting agency, submit Traffic Control Plans for potholing, asphalt overlays, street striping, installing pipeline appurtenances, and for other work not constructed within the work area of the traffic controls shown on the Plans to the Engineer and the agency having jurisdiction for review and approval prior to beginning such work. All construction shall conform to the provisions of the Contract Documents, including the public agencies' encroachment permits and any special conditions attached thereto. The Contractor shall allow for four weeks for agencies to review and provide comments on submitted traffic control plans.

g. The Contractor shall observe and implement all environmental controls and procedures for the handling and disposal of groundwater, as specified in Section 02140.

h. The Owner has obtained the permits provided in Appendix C of these Specifications. All construction shall conform to the provisions of permits and any conditions attached thereto. The Contractor shall be bound by the terms and conditions of these permits:

    i) Encroachment permit from the County of Ventura.

    ii) A Notice of Intent (NOI) with the State Water Resources Control Board (SWRCB) has been filed for the project. A copy of the NOI application and receipt are provided. The Contractor shall observe and implement all environmental controls and procedures required by the approved Storm Water Pollution Prevention Plan. See Section 02970 for detailed requirements.

    iii) Encroachment permit from the Ventura County Watershed Protection District.

    iv) Department of Industrial Relations Tunnel Underground Classification.

v) Coverage under the General Permit for Discharges of Low Threat Hydrostatic Test Water to Surface Waters.

1-06. Right-of-Way.

a. The pipeline and appurtenances are to be constructed in both public right-of-way and within Owner obtained private easements.

b. The Contractor shall promptly restore or repair any damage that his operations may cause to property or improvements.

c. The Work under these Specifications is located in the unincorporated County of Ventura, California. In the performance of the Work, the Contractor shall comply with the applicable ordinances, rules and regulations of the authorities having jurisdiction governing excavation and other work in existing or proposed public streets and ways, including the furnishing of all required certificates of insurance.

d. Neither the terms thereof nor anything shown on the Drawings or elsewhere in the Contract Documents shall be construed to entitle the Contractor to conduct operations in the public right-of-way in violation of any ordinances or regulations restricting interference with watercourses and drainage channels. The Contractor shall take all necessary or required precautions against obstructing stormwater flow in any affected watercourse or channel, and shall not deposit excavated material anywhere that might interfere with or be subject to erosion from such flow.

e. It shall be the Contractor's responsibility to obtain any rights-of-way additional to that specified or indicated to be provided in the Contract Documents as they may require to perform the Work required under the Contract. The locations of any of the Contractor's storage and yard areas and other rights-of-way they may require, other than those shown on the Drawings and set forth in the Specifications, are subject to the approval of the Owner. The Contractor shall submit to the Owner agreements and/or letters of permission establishing the Contractor's rights to use the storage and yard areas and the conditions of use.

f. Nothing herein shall be construed to entitle the Contractor to exclusive use of any public street or right-of-way during performance of the Work required under the Contract. The Contractor shall conduct their operations as not to interfere with authorized work of utility companies or other agencies in such rights-of-way.

1-07. Project Drawings.

Drawings titled "Calleguas Municipal Water District, Salinity Management Pipeline, Phase 2A," ___ sheets total, were prepared for this project.

1-08. Standard Drawings.

Referenced Calleguas Municipal Water District Standard Drawings are included as Appendix A. Additional Calleguas Standard Drawings, if applicable or required to complete the Work or referenced elsewhere, are available at the Calleguas office and shall be provided to the Contractor upon request.

1-09. Lines, Grades and Measurements.

a. Reference lines and grades for the project are indicated on the Drawings and the Contractor shall provide construction surveys from Drawings and Engineer-approved lay sheets and such materials and such assistance as may be required for the Owner to verify proper installation of the Work. The construction surveyor shall be a licensed Land Surveyor in the State of California. The Contractor shall preserve all benchmarks, monuments, survey marks, and stakes, and in case of their removal or destruction by him or his employees by reason of his negligence, he shall have them replaced by a licensed Land Surveyor or shall be liable for the cost of their replacement, including recording of any survey maps or other documents associated with the damaged benchmarks or monuments.

b. The Contractor shall keep the Owner informed, a reasonable time in advance, of the times and places at which he intends to do work, in order that the Owner may verify said construction lines and grades as may be determined necessary by the Owner and that inspection may be made with the minimum of inconvenience to the Owner or of delay to the Contractor.

c. Whenever the Owner finds it necessary to carry on his operations to verify construction lines, grades, and measurements outside of regular working hours or at other times when the work of the Contractor is not in progress, the Contractor shall furnish all necessary service and assistance. No direct payment shall be made for the cost to the Contractor of any work or delay occasioned by making necessary measurements or by inspections.

d. Tie and restoration of existing survey controls which may be damaged or destroyed shall be in accordance with the agency having jurisdiction.

1-10. Water Supply.

The Contractor shall furnish, at his/her own expense, an adequate supply of water for the purpose of constructing all of the works, including flushing and testing under these Contract Documents. The Owner does not have facilities for providing any construction water to the Contractor for the Work required under this Contract.

The Camrosa Water District is a local water supplier that may be able to provide the required construction water. The Contractor shall determine the adequacy and suitability of any such water supply and negotiate all usage requirements with the utility owner at no additional cost to the Owner.

1-11. Preliminary Meetings.

a. Within one month of the Notice to Proceed and at least five Working Days prior to beginning any construction, including potholing, the Contractor shall schedule, coordinate and attend a preconstruction meeting with the Owner and interested parties to review the scope of work. The Contractor shall require that the Contractor's Project Manager, Project Engineer, and Superintendent attend this meeting. If these representatives are not present at the preconstruction meeting, the meeting will be cancelled and rescheduled at no additional cost to the Owner. The preconstruction meeting shall precede the pre-submittal meeting.

b. Prior to the Contractor submitting any material Submittals, the Contractor shall schedule, coordinate and attend a pre-submittal meeting with the Owner and interested parties to review material and material inspection requirements. At a minimum, the following are required to be in attendance:

   i) Contractor's Project Manager
   ii) Contractor's Project Engineer or person responsible for technical assembly of Submittals
   iii) Representative(s) for the welded steel or HDPE pipe and fittings fabricator(s)
   iv) Shop superintendent(s) or his/her direct subordinate responsible for the manufacturing of 24-inch and larger diameter pipe and fittings

   If these representatives are not present at the pre-submittal meeting, the meeting will be cancelled and rescheduled at no additional cost to the Owner. The Contractor shall verify and communicate said verification to the Owner at least 7 Calendar Days prior to the meeting that each of the welded steel or HDPE manufacturing or fabricating related attendees have received a copy of the portions of the Specifications related to their work.

1-12. Design.

The Contractor shall assume full responsibility for a coordinated and adequate design of the materials and equipment furnished. Liberal factors of safety shall be applied throughout the design, especially in the design of all parts to be subjected to intermittent or alternating stresses, or to shock. The proportions and dimensions of the individual parts of the equipment to be furnished hereunder shall be such that each part will successfully withstand all of the stresses to which it may be subjected under operating or test conditions without failure, distortion or other evidence of weakness. Any and all parts subject to periodic renewal shall be readily accessible with minimum dismantling of the equipment involved. Adequate provisions shall be made for lubrication of bearing surfaces of all moving parts. All equipment and appurtenances furnished under the Contract shall comply with the rules and regulations of the U.S. Department of Labor, OSHA and CAL/OSHA, as supplemented and administered by the State of California Department of Industrial Relations.

1-13. Testing of Completed Project.

Upon completion of construction, the pipeline and appurtenances shall be tested for compliance with the requirements of the Contract Documents.

1-14. Coordination with Other Projects.

Construction of this project may be performed concurrently with other construction projects by the Owner and others. The Contractor shall coordinate all construction activities, including work areas, traffic control, and schedules, with other contractors working in the project area.

1-15. Geotechnical Reports.

a. The following geotechnical report(s) are available for the Contractor's review at www.calleguas.com/planholders.htm:

   "Geotechnical Investigation Report Proposed Boring and Jacking for Salinity Management Pipeline, Phase 2A Calleguas Municipal Water District XXXXXXXXXXXXXX, California"
   Prepared by Converse Consultants, _____

   Bidders shall assume full responsibility for their interpretation of the findings presented in the reports. The reports shall not be considered to be part of the Contract Documents.

b. Groundwater. As noted in the geotechnical reports, during subsoil investigations, groundwater at depths ___ feet to ___ feet below the ground surface was encountered in the vicinity of the alignment of the pipeline to be installed. The actual level of the groundwater may vary; the Contractor shall determine, through his own efforts, the level and extent of such water and shall assume all responsibility for the deductions and conclusions as to the effect groundwater will have upon the Work.

c. Additional Subsurface Exploration. Any additional subsurface exploration deemed necessary by the Contractor shall be conducted at the Contractor's expense.

d. Each Bidder shall include in his Bid, all costs associated with groundwater control and dewatering, rock excavation and removal, special excavation requirements, including sheeting, shoring and bracing of the site as required, and of fill and compaction requirements.

e. It shall be the responsibility of the Contractor to determine, allow for, excavate, remove and dispose of, as necessary, any unsuitable rock or material encountered. All unsuitable rock or material removal and disposal for construction purposes shall be the responsibility of the Contractor and shall be paid in accordance with the appropriate bid items.

f. All unstable or unsuitable material shall be removed, disposed of, and replaced with stabilized subgrade per the recommendation of the Owner's Materials Inspector, and the Technical Specifications, or as directed by the Owner.

g. The Contractor should expect to encounter non-cohesive material in the bedding, pipe zone, and backfill of existing trenches.

h. All grading, trenching, excavation, fill, compaction and fine grading will be performed under inspection by the Owner.

1-16. Owner and Engineer Costs.

a. Owner and Engineer charges to the Contractor in conformance with General Conditions 3.6.2 and 5.18.3, and Section 01300 will be based upon the following Schedules of Rates:

1. Owner's Rates:

Project Manager	$87.00/hour
Construction Inspector	$62.00/hour

2. Engineer's Rates:

Project Manager	$180.00/hour
Senior Engineer	$150.00/hour
Project Engineer	$160.00/hour
Construction Observer	$94.00/hour
Senior Construction Observer	$110.00/hour

3. Owner's Materials Inspector's Rates:

Project Manager	$90.00
Inspector	$110.00

4. Expenses:

Engineer's expenses will be charged at cost plus 15 percent.

5. No costs for overtime inspection will be charged to the Contractor for work performed during work hours shown on the Drawings.

1-17. Access and Construction in Public Right-of–Way.

a. The Contractor shall remove all construction debris from public rights-of-way and sweep clean the public street during work as required and, as a minimum, at the end of each work day.

b. Access from adjacent properties to public roads along the pipeline alignment and construction area shall be maintained at all times, except where specifically shown to be closed on the traffic control plans. The Contractor shall perform his construction such that private, government, commercial, and other vehicles have convenient access to and from public roads where the work is being performed.

c. All existing irrigation pipelines, valves, sign posts, mail boxes, concrete curb, etc. shall be protected in place. Any existing facilities damaged during construction, including asphalt pavement, shall be promptly replaced with new in-kind and/or as directed by the Owner and in accordance with the requirements of the agency having jurisdiction.

d. Pavement shoulder backing for all temporary pavement extensions shall be maintained on a daily basis within the Contractor's work area. Shoulder backing which requires repair shall be repaired in accordance with materials and requirements specified in Caltrans' Standard Special Provisions 19-720.

e. After completion of work each day, cover all open trenches in the accessible, traveled way (i.e., not protected behind K-Rail) with steel trench plates in accordance with applicable regulations and requirements or backfill and install temporary pavement. This is not required for trenches protected behind K-Rail. Note that the Contractor shall not use steel trench plates in the traveled way except in areas specifically shown on the Drawings, unless approved in advance in writing by Calleguas and the agency having jurisdiction.

f. Pipe and any other construction materials shall be staged and stored only as shown on the Drawings and within the Contractor's own property or right-of-ways, or within the work area behind protective k-rail of the traffic control.

g. Refer to Special Conditions Paragraph 1-19, Section 13520 of the Technical Specifications, and the County of Ventura Encroachment Permit in Appendix C for further specifications, conditions, and requirements, including traffic control requirements.

1-18. Progress Meetings.

a. On-site progress meetings will be held at least weekly during periods of on-site construction activity and at other times as required by the Owner. The Contractor and all subcontractors active on the Site shall be represented at each meeting. Contractor may, at its discretion, request attendance by representatives of its suppliers, manufacturers and other subcontractors. Similarly, the Owner may also request attendance by the Engineer or others.

b. The purpose of the meetings will be to review the progress of the Work, maintain coordination of efforts, discuss changes in scheduling, and resolve other problems which may develop.

1-19. Traffic Control.

a. Contractor shall adhere to the temporary traffic control as shown on the Drawings and as specified herein, including Section 13520, and the County of Ventura Encroachment Permit, which is included in Appendix C. Note that the Encroachment Permit may have specific special conditions with which the Contractor is required to comply. If the Contractor should request any changes to the traffic control plans included with the Contract Documents, the Contractor will be required to prepare revised traffic control plans; submit them to the Engineer and Calleguas for review and approval prior to submittal to the agency(ies) having jurisdiction (County of Ventura); and pay the Engineer's, Owner's, and jurisdictional agency's fees for reviewing the revised plans, in accordance with the requirements of the Encroachment Permit and the Contract Documents. The Contractor shall allow for 4 weeks for review of each traffic control plan submittal by the agency with jurisdiction.

b. Temporary traffic control during potholing, placement of asphalt overlays, installation of appurtenances, to accommodate any inspections by the Owner, for installation and removal of pipelines for transportation of trench dewatering water, and for other tasks is the responsibility of the Contractor. Any required new traffic control plans different than those shown on the Drawings shall be submitted to the Engineer and Calleguas for review and approval prior to submittal to the agency(ies) having jurisdiction (County of Ventura). The Contractor shall allow for 4 weeks for review of each traffic control plan submittal by the agency with jurisdiction.

c. The Contractor may not, without written permission from the Owner, install any temporary traffic controls shown on the Drawings for pipeline construction in the public right-of-way prior to having all pipe and fittings necessary to complete the work to be constructed under that traffic control set up on site or at a local storage yard. Traffic controls required for dewatering well installation shall be in accordance with Section 02140, Paragraph 3.03.O.

1-20. Damage to Existing District Facilities.

Contractor is to take extra care when working around exposed District facilities. Any damage to existing District facilities shall be replaced in kind and in accordance with these Drawings and Specifications, District Standard Drawings and as directed by the District. Any damage to any portion of the existing pipe to remain may be cause for the replacement of the entire piece of such pipe at the expense of the Contractor. The District shall be the sole determiner as to the extent of damage which will require pipe replacement. The allowable repair method for any existing pipe to remain, if permitted, shall be determined only by the District.

1-21. Safety.

a. Safety shall be the sole responsibility of the Contractor. Security fencing shall be placed around the Contractor's work area with appropriate signage and shielded lighting.

b. Construct a concrete K-railing barrier and fall protection fencing around the periphery of trenchless installation shafts, meeting applicable safety standards. Properly maintain the barrier throughout the period the shaft remains open. Repair broken boards, supports, and structural members.

c. Provide a full cover or other security barrier for all open excavation in which there is no construction activity or which is unattended by the Contractor's personnel.

d. The Contractor is hereby notified that all entries, including inspections, into the pipelines and vaults, are considered to be permit-required confined space entries. The Contractor will be required to comply with all applicable laws, regulations, and ordinances concerning permit-required confined space entry prior to entering such confined spaces.

1-22. Additional Insureds.

The following agencies shall be named as additional insureds in the Contractor's General Liability Policy:

a. County of Ventura
b. Ventura County Watershed Protection District
c. Private property owners.

1-23. Delivery of Materials to Owner's Yard.

Materials to be delivered to Owner's yard, as specified in the Specifications and shown on the Drawings, shall be delivered to 6811 Grimes Canyon Rd., Moorpark, California. Contractor shall notify the Owner 1 week in advance of delivery for any item. Contractor shall provide equipment and operator to unload.

1-24. Trench Shoring/Sheeting.

Construction of the pipeline will be in close proximity to traffic lanes and agricultural equipment. Contractor shall take this into consideration and design the required trench shoring/sheeting system and perform his/her work in a safe and orderly manner so as to construct the pipeline in such close proximity to traffic barriers and lanes. Reconfiguration of the traffic controls which places additional inconvenience on the traveling public for the convenience of the Contractor will not be allowed.

1-25. Pre-Job Meeting for Trenchless Casing.

A mandatory pre-job meeting with the Department of Industrial Relations (DIR) is required prior to start of any field work in connection with the casings via trenchless methods. The Contractor shall coordinate with DIR, Division of Occupational Safety and Health Mining and Tunnel Unit to arrange a meeting for each casing to be installed. The Contractor shall notify the Owner at least seven (7) Calendar Days in advance of scheduled meeting with DIR. The underground classification, as determined by DIR, for this project is included in the Appendix.

1-26. Payment for Materials.

a. This section modifies General Conditions 6.3.6. Up to 75% of the cost of 30-inch pipeline materials may be included in the Partial Estimates if the following conditions are met:

    1. The materials comply with the requirements of the Contract Documents.
    2. The materials have been delivered to the Site or a local staging and storage area acceptable to the Owner.
    3. The materials have been inspected and verified by the District's Construction Inspector.
    4. The Contactor provides a copy of the invoice from the supplier and conditional waiver and release upon progress payment from the supplier in a form consistent with California Civil Code Section 3262.
    5. The Contactor provides a copy of the unconditional waiver and release upon progress payment from the supplier in a form consistent with California Civil Code Section 3262 with the next month's invoice.

    Payment for materials shall not be deemed an acceptance of the materials or any part of the Work. The Contractor remains responsible for proper storage, security, protection, and handling of the materials. Should any materials partially paid for subsequently be determined to be out of compliance with the Contract Documents, damaged, or otherwise unsatisfactory by the Owner, the Owner may retain the amounts previously paid from future Partial Estimates.

1-27. Graffiti Removal.

All graffiti on the Contractor's equipment, materials, or work shall be removed within 24 hours.

1-28. Factory Inspection and Testing

All materials and component equipment manufactured or assembled pursuant to the Contract Documents for incorporation into the Work shall be subject to inspection by the Materials Inspector at the place of manufacture regardless of location. Manufacturing activities requiring inspection may include:

- Review of the proposed manufacturing plant to verify its suitability for fabrication of the required materials and appurtenances.
- Fabrication, including fittings and specials.
- Shop testing of all manufacturing processes and manufactured materials.
- Processes used to transport materials to and from each manufacturing phase to preparing materials for transport to the Site.

At his discretion, the Owner shall arrange for and pay a Materials Inspector to perform inspections on behalf of the Owner for the steel pipe and fittings 12" and larger.

The Contractor shall provide the Owner with 10 Working Days advanced written notice of the date when fabrication will begin, unless specified otherwise in the applicable technical specification. If fabrication begins later than the date provided in the notice, the Contractor shall pay to Calleguas all costs for an inspector to wait on standby for the fabrication or testing to begin, including but not limited to hourly wage, per diem, and expenses. Failure on the part of the Contractor to provide the notice required herein shall be just cause for the Owner to reject the materials fabricated without such notice.

The Contractor shall provide for the producer, manufacturer or fabricator to furnish safe access and to cooperate with the Materials Inspector in the performance of his duties. The Materials Inspector shall have free entry at all times to the manufacturer's facilities while tests and inspections are being conducted. Adequate facilities shall be furnished free of charge to allow the Materials Inspector to perform its factory and plant inspections, including taking photographs. Retain on file and make available to the Materials Inspector, upon request, copies of all specified reports, test results, and quality control documentation relating to the Work.

All pipe of each material shall be fabricated at one location in US. Valves subject to shop inspection and testing shall be manufactured in the US.

1-29. Potholing

In addition to potholing requirements in General Conditions and elsewhere in the Contract Documents, the Contractor shall additionally provide potholing and potholing information and included in the Pothole Report the following:

a. Pothole all utilities adjacent to and within 5 feet of all buried structures. The number of potholes shall be sufficient to determine plan location and direction and depth of all said utilities.

1-30. Buy American

a. General Requirements. This project is subject to the American Recovery and Reinvestment Act of 2009 "Recovery Act," and the Contractor shall comply with the following provisions.

1. **Iron and Steel to be used in the Work shall be from the United States or from a Designated Country**, unless the federal government determines that an exception applies as set forth herein.

2. **A Manufactured Good to be used in the Work shall have been substantially transformed in the United States or a Designated Country into a new and different Manufactured Good distinct from the materials from which it was transformed**, unless the federal government determines that an exception applies as set forth herein.

b. Relevant Regulations

1. Section 1605(a) of the American Recovery and Reinvestment Act of 2009 (Pub. L. 111-5) (Recovery Act), by requiring that all iron, Steel, and Manufactured Goods used in the project are produced in the United States; and

2. Section 1605(d), which requires application of the Buy American requirement in a manner consistent with U.S. obligations under international agreements. The restrictions of section 1605 of the Recovery Act do not apply to Designated Country Iron, Steel, and/or Manufactured Goods.

3. Additional information on the regulations may be found at http://www.arnet.gov/far/current/html/Subpart%2025_1.html#wp1118857.

c. Definitions. As used in this section:

1. "Manufactured Good" means a good brought to the construction site for incorporation into the building or work that has been

   i. processed into a specific form and shape or

   ii. combined with other raw material to create a material that has different properties than the properties of the individual raw materials.

2. "Steel" means an alloy that includes at least 50 percent iron, between .02 and 2 percent carbon, and may include other elements.

3. "Domestic Iron, Steel, and/or Manufactured Good"

   i. Is wholly the growth, product, or manufacture of the United States; or

   ii. In the case of a Manufactured Good that consists in whole or in part of materials from another country, has been substantially transformed in the United States into a new and different Manufactured Good distinct from the materials from which it was transformed. There is no requirement with regard to the origin of components or subcomponents in Manufactured Goods or products, as long as the manufacture of the goods occurs in the United States.

4. “Designated Country” means

   i. a World Trade Organization Government Procurement Agreement country: Aruba, Austria, Belgium, Bulgaria, Canada, Cyprus, Czech Republic, Denmark, Estonia, Finland, France, Germany, Greece, Hong Kong, Hungary, Iceland, Ireland, Israel, Italy, Japan, Korea (Republic of), Latvia, Liechtenstein, Lithuania, Luxembourg, Malta, Netherlands, Norway, Poland, Portugal, Romania, Singapore, Slovak Republic, Slovenia, Spain, Sweden, Switzerland, and United Kingdom;

   ii. a Free Trade Agreement country: Australia, Bahrain, Canada, Chile, Costa Rica, Dominican Republic, El Salvador, Guatemala, Honduras, Israel, Mexico, Morocco, Nicaragua, Oman, Peru, or Singapore; or

   iii. a United States-European Communities Exchange of Letters (May 15, 1995) country: Austria, Belgium, Bulgaria, Cyprus, Czech Republic, Denmark, Estonia, Finland, France, Germany, Greece, Hungary, Ireland, Italy, Latvia, Lithuania, Luxembourg, Malta, Netherlands, Poland, Portugal, Romania, Slovak Republic, Slovenia, Spain, Sweden, and United Kingdom.

5. “Designated Country Iron, Steel, and/or Manufactured Good”

   i. is wholly the growth, product, or manufacture of a Designated Country; or

   ii. in the case of a Manufactured Good that consists in whole or in part of materials from another country, has been substantially transformed in a Designated Country into a new and different Manufactured Good distinct from the materials from which it was transformed. There is no requirement with regard to the origin of components or subcomponents in Manufactured Goods, as long as the manufacture of the goods occurs in a Designated Country.

6. “Foreign Iron, Steel, and/or Manufactured Good" means iron, Steel and/or Manufactured Good that is not Domestic or Designated Country Iron, Steel, and/or Manufactured Good.

d. <u>Request for Determination of Inapplicability</u>

   1. The Federal government may approve the use of Foreign Iron, Steel, and/or Manufactured Goods in the Work if the federal government determines that:

      i. The cost of the Domestic or Designated Country Iron, Steel, and/or Manufactured Goods would be unreasonable. The cost is considered unreasonable when the cumulative cost of such material will increase the cost of the overall project by more than 25 percent;

      ii. The iron, Steel, and/or Manufactured Good is not produced, or manufactured in the United States or in a Designated Country in sufficient and reasonably available quantities and of a satisfactory quality; or

      iii. The application of the restriction on Foreign Iron, Steel, and/or Manufactured Goods would be inconsistent with the public interest.

2. Any request to use Foreign Iron, Steel, and/or Manufactured Goods shall include adequate information for federal government evaluation of the request, including but not limited to:

   i. A description of the Foreign Iron, Steel, and/or Manufactured Goods;

   ii. A description of the Domestic or Designated Country Iron, Steel, and/or Manufactured Goods;

   iii. Unit of measure;

   iv. Quantity;

   v. Cost;

   vi. Time of delivery or availability;

   vii. Location of the project;

   viii. Name and address of the proposed supplier; and

   ix. A detailed justification of the reason for use of Foreign Iron, Steel, and/or Manufactured Goods.

3. A request based on unreasonable cost shall include a survey of the market and a completed cost comparison table in the following format.

Foreign & Domestic/Designated Country Cost Comparison			
Description	Unit of Measure	Quantity	Cost (Dollars) (includes delivery to the Site & applicable duty)
Item 1:			
Foreign Steel, Iron, or Manufactured Good			
Domestic or Designated Country Steel, Iron, or Manufactured Good			
Item 2:			
Foreign Steel, Iron, or Manufactured Good			
Domestic or Designated Country Steel, Iron, or Manufactured Good			

   i. Include the name, address, telephone number, email address, and contact for suppliers surveyed.

   ii. Attach a copy of the suppliers' response or, if the response was oral, attach a written summary of the discussion.

   iii. Include other applicable supporting information.

1-31. Requirements for Labor Compliance Program

a. The Work is subject to the requirements of a Labor Compliance Program (LCP). As such, the District has retained the services of a third party administrator of LCP services. The Contractor shall cooperate fully with the LCP provider in submitting information and cooperating with site visits and other required LCP activity.

b. The Contractor shall post at the Site the contact information for the third party administrator providing LCP services for the Work.

c. The following language is hereby inserted at the end of Article 5.16 of the General Conditions: "The District reserves the right to withhold progress and final payment on this project until all appropriate certified payroll forms and related Labor Compliance Program (LCP) documents are submitted and found to be in compliance."

d. The following language is hereby inserted at the end of Article 6.3.8 of the General Conditions: "(3) Any sums it believe may be necessary in response to failure to fully comply with LCP requirements for the Work."

e. Only individuals who are legally able to work in the United States shall be employed for the Work.

f. As California prevailing wage statutes and regulations are also applicable to the Work, the more restrictive requirements (be it the State or the federal requirements) will be applied.

g. Appendix F provides additional information about Labor Compliance Program requirements.

h. The District requires that certified payrolls be submitted electronically via LCP Tracker or similar electronic service designated by the District.

1-32. Simultaneous Work Areas in the Public Right-of-Way

The Contractor shall not be allowed to have more than one traffic control setup within the public right-of-way at the same time unless approved in writing by the Owner and all agencies having jurisdiction. Although the Contractor may obtain approval by all agencies having jurisdiction, the Owner may not allow multiple traffic control setups.

1-33. Access to Work Areas Prior to Bid Opening

Interested Bidders may access and perform their own surface and/or subsurface investigations in the public right-of-way subject to all of the requirements of the agency(ies) having jurisdiction. The Owner does not have jurisdiction and cannot grant or deny permission for a Bidder to perform any work prior to Bid Opening."

1-34. Mainline Pipe Submittal

Submittal for any portion of the mainline pipe shall not be made until the Pothole Report is accepted by the Engineer and any required changes to the original pipe design alignment have been provided to the Contractor. The mainline pipe Submittal shall incorporate any such changes prior to being submitted to the Engineer for review.

1-35. Groundwater and Surface Water

a. Groundwater and surface water may be present in the vicinity of the Work. The Contractor shall determine, through his own efforts, the level and extent of such water and must assume all responsibility for the deductions and conclusions as to the effect groundwater and surface water will have upon the Work. Any expected or anticipated flows included within any permits included with these Contract Documents were provided to the applicable regulatory agency(ies) for the purpose of obtaining necessary permits only and are not to be used by the Contractor for purposes of determining the level and extent of any groundwater or surface water.

b. The Contractor shall be responsible for controlling all surface and subsurface water where water is encountered. All costs of groundwater and surface water control and handling required to satisfactorily complete the Work shall be included in the Bid Items listed in the Bid Schedule. For detailed requirements, see Specifications Sections 02140, 02200, and elsewhere in the Contract Documents.

c. There is no permit for the disposal of water removed from excavations during dewatering operations. All such water must be put to beneficial use for dust control and irrigation or disposed in a legal manner. The Contractor shall obtain written permission from the property owner for water put to beneficial use. No water removed from an excavation shall be allowed to flow off-site.

END OF SPECIAL CONDITIONS

This page intentionally left blank.

TECHNICAL PROVISIONS

SECTION 01270

BID ITEM DESCRIPTION, MEASUREMENT AND PAYMENT

PART 1 - GENERAL

1.01 SUMMARY

A. This Section provides a description for payment purposes of the various elements, components, actions, equipment and materials that are included with each bid item. Also included is a description of how measurement of a bid item will be performed, as necessary for payment purposes. Lump sum bid items will have no measurement description, since the quantity is one.

B. The lump sum price includes full compensation for furnishing all labor, tools, materials, equipment and incidentals required to complete the work in accordance with the Contract Documents. No other compensation will be allowed therefor.

C. The unit price includes full compensation for furnishing all labor, tools, materials, equipment and incidentals required to complete the work in accordance with the Contract Documents. No other compensation will be allowed therefor.

1.02 MEASUREMENT AND PAYMENT DESCRIPTIONS

A. Mobilization and Preparatory Work (Bid Item No. 1). Payment for mobilization and preparatory work according to these Contract Documents will be made at the lump sum price bid therefor in the schedule. The lump sum price for mobilization shall include compensation for the movement of personnel, equipment, supplies and incidentals to the Site; for the establishment of any offices and temporary facilities and services at or near the Site; for the securing of permits required for the Work and occupancy rights to lands incidental to the Work; for payment of premiums for bonds and insurance for the Work; for any necessary costs of acquisition of equipment, including purchase and mobilization; and for any other Work and operations which must be performed or costs that must be incurred incident to the initiation of meaningful work at the site and for which payment is not otherwise provided for in other bid items.

When other bid items are adjusted, mobilization and preparatory work costs will be deemed to have been recovered by the Contractor by the payments made for mobilization and preparatory work, and will be excluded from consideration in determining compensation therefor. Progress payments for mobilization and preparatory work shall be subject to retainage as provided within these Specifications.

Progress payments for mobilization and preparatory work will be made as follows:

1. For the first progress payment (after the date of the Notice to Proceed), 40 percent of the amount bid for mobilization and preparatory work will be allowed.

2. When 25 percent of the total original Contract Amount is earned from other schedule items, an additional 20 percent of the amount bid for mobilization and preparatory work will be allowed.

3. When 50 percent of the total original Contract Amount is earned from other bid schedule items, an additional 20 percent of the amount bid for mobilization and preparatory work will be allowed.

4. When 75 percent of the total original Contract Amount is earned from other schedule items, an additional 10 percent of the amount bid for mobilization and preparatory work will be allowed.

5. When 90 percent of the total original Contract Amount is earned from other schedule items, the final 10 percent of the amount bid for mobilization and preparatory work will be allowed.

B. Furnish and Install 30-Inch welded steel Pipe in Paved Areas (Bid Item No. 2). Work to be done under this bid item is for the labor, materials, equipment and incidentals for the construction of the 30-inch welded steel pipe within concrete or asphalt concrete paved areas, complete and including all labor, materials, equipment and incidentals necessary to complete the pipeline installation as specified herein and as shown on the Drawings and up to one foot deeper than shown on the Drawings, including, but not limited to, the following:

1. Welded steel pipe, fittings and appurtenances.
2. Sawcut of pavement(s) for trench excavation.
3. Excavation of trench, removal, and storage or disposal of excavated material, inclusive of all hauling to and from storage area(s) or final disposal site.
4. Dewatering and water disposal.
5. Support of existing utilities.
6. Installation of all necessary temporary construction and safety devices, such as formworks, falseworks, and ladders, but not including trench shoring which is included in Bid Item No. 4.
7. Trench trimming and preparation of trench.
8. Pipe preparation and assembly, including all necessary outlets, connections, restraints, and installation into trench.
9. Placement of warning tape.
10. Installation of bedding and backfill materials, including sand, cement-sand slurry, soil-slurry, or soil-cement, select granular material, compaction of backfill materials and other associated work.
11. Temporary paving.
12. Permanent pavement restoration.

This bid item does not include 30-inch pipe to be installed within steel casings. Payment for this Bid Item will be made at the unit price bid therefor in the Bid Schedule, complete and in place in accordance with the Contract Documents or as directed by the Owner. Length of 30-inch pipe will be measured on the center line of the pipe as computed from the pipeline slope distance as installed, including space along the centerline occupied by fittings and outlets. Length at fabricated bends will be measured along the centerline sub-tangents.

C. Furnish and Install 30-inch Welded Steel Pipe in Unpaved Areas (Bid Item No. 3). Work to be done under this bid item is for the labor, materials, equipment and incidentals for the construction of the 30-inch welded steel pipe within unpaved areas, complete and including all labor, materials, equipment and incidentals necessary to complete the pipeline installation as specified herein and as shown on the Drawings and up to one foot deeper than shown on the Drawings, including, but not limited to, the following:

1. Welded steel pipe, fittings and appurtenances.
2. Excavation of trench, removal, and storage or disposal of excavated material, inclusive of all hauling to and from storage area(s) or final disposal site.
3. Dewatering and water disposal.
4. Support of existing utilities.
5. Installation of all necessary temporary construction and safety devices, such as formworks, falseworks, and ladders, but not including trench shoring which is included in Bid Item No. 4.
6. Trench trimming and preparation of trench.
7. Pipe preparation and assembly, including all necessary outlets, connections, restraints, and installation into trench.
8. Placement of warning tape.
9. Installation of bedding and backfill materials, including sand, cement-sand slurry, soil-slurry, or soil-cement, select granular material, compaction of backfill materials and other associated work.
10. Hardscape and landscape restoration.

This bid item does not include 30-inch pipe to be installed within steel casings. Payment for this Bid Item will be made at the unit price bid therefor in the Bid Schedule, complete and in place in accordance with the Contract Documents or as directed by the Owner. Length of 30-inch pipe will be measured on the center line of the pipe as computed from the pipeline slope distance as installed, including space along the centerline occupied by fittings and outlets. Length at fabricated bends will be measured along the centerline sub-tangents.

D. Furnish and Install Sheeting, Shoring, Bracing or Sloping of Excavations (Bid Item No. 4). Work to be done under this bid item is for the labor, materials, equipment and incidentals for providing, installing, and subsequent removal after use of adequate sheeting, shoring, and bracing or sloping of trenches and other excavations, complete and including all materials, labor, equipment and incidentals necessary to protect and

construct facilities specified herein and as shown on the Drawings for the installation of the 30-inch welded steel pipe and appurtenances. This excludes work related to construction of steel casings which is included elsewhere.

Payment for this bid item will be made at the lump sum price bid therefor in the Bid Schedule, complete and in place in accordance with the Contract Documents or as directed by the Owner.

E. 24-Inch Manhole Outlet on 3-Inch Welded Steel Pipe and Concrete Manhole Access Structure (Bid Item No. 5). Work to be done under this bid item is for the labor, materials, equipment and incidentals for 24-inch welded steel manhole assemblies on 30-inch welded steel pipe including, pre-cast concrete manholes, concrete base, outlets, flanges, blind flanges, hardware, and small valves as indicated and in accordance with the Contract Documents. Additionally, work to be done under this bid item is for the labor, materials, equipment and incidentals required for the complete installation of pre-cast concrete access manhole structures, including required additional excavation, aggregate base, dewatering and water disposal, concrete work, concrete manhole structure, backfill, pavement restoration, metal work, manhole frame and cover, water proofing and other pertinent work, as specified herein and as shown on the Drawings.

Payment for this bid item will be made at the unit price bid therefor in the Bid Schedule, complete in place in accordance with the Contract Documents or as directed by the Owner.

F. 8-inch Outlet on 30-inch Welded Steel Pipe (Bid Item No. 6). This bid item is for the labor, materials, equipment and incidentals for 8-inch outlet assembly on 30-inch welded steel pipe including outlet, 8-inch welded steel piping and fittings, flanged adaptor and flange; but not including valves, welded steel piping and other items indicated to be attached to outlets, all of which will be paid for separately.

Payment for this bid item will be made at the unit price bid therefor in the Bid Schedule, complete in place in accordance with the Contract Documents or as directed by the Owner.

G. 6-inch Outlet on 30-inch Welded Steel Pipe (Bid Item No. 7). This bid item is for the labor, materials, equipment and incidentals for 6-inch outlet assembly on 30-inch welded steel pipe including outlet, 6-inch welded steel piping and fittings, flanged adaptor and flange; but not including valves, welded steel piping and other items indicated to be attached to outlets, all of which will be paid for separately.

Payment for this bid item will be made at the unit price bid therefor in the Bid Schedule, complete in place in accordance with the Contract Documents or as directed by the Owner.

H. Furnish and Install 42-Inch Steel Casing No. 1 and 30-Inch Welded Steel Pipe and Connections (Bid Item No. 8). Work to be done under this bid item is for the labor, materials, equipment and incidentals for the complete installation of a 42-inch Steel

Casing No. 1 between stations and 30-inch welded steel carrier pipe including all excavation, tunneling, dewatering and water disposal, casing, 30-inch welded steel pipe 10 feet beyond the ends of the casing, utility protection, pressure grouting, filling voids and annular space, end seals, hauling excess materials, backfill of tunnel shafts with cement-sand slurry, surface restoration, temporary traffic control and striping, and other associated work.

Payment for this bid item will be made at the lump sum bid therefor in the Bid Schedule, complete and in place in accordance with the Contract Documents or as directed by the Owner.

I. Furnish and Install 42-Inch Steel Casing No. 2 and 30-Inch Welded Steel Pipe and Connections (Bid Item No. 9). Work to be done under this bid item is for the labor, materials, equipment and incidentals for the complete installation of a 42-inch Steel Casing No. 2 between stations and 30-inch welded steel carrier pipe including all excavation, tunneling, dewatering and water disposal, casing, 30-inch welded steel pipe 10 feet beyond the ends of the casing, utility protection, pressure grouting, filling voids and annular space, end seals, hauling excess materials, backfill of tunnel shafts with cement-sand slurry, surface restoration, temporary traffic control and striping, and other associated work.

Payment for this bid item will be made at the lump sum bid therefor in the Bid Schedule, complete and in place in accordance with the Contract Documents or as directed by the Owner.

J. Furnish and Install 42-Inch Steel Casing No. 3 and 30-Inch Welded Steel Pipe and Connections (Bid Item No. 10). Work to be done under this bid item is for the labor, materials, equipment and incidentals for the complete installation of a 42-inch Steel Casing No. 3 between stations and 30-inch welded steel carrier pipe including all excavation, tunneling, dewatering and water disposal, casing, 30-inch welded steel pipe 10 feet beyond the ends of the casing, utility protection, pressure grouting, filling voids and annular space, end seals, hauling excess materials, backfill of tunnel shafts with cement-sand slurry, surface restoration, temporary traffic control and striping, and other associated work.

Payment for this bid item will be made at the lump sum bid therefor in the Bid Schedule, complete and in place in accordance with the Contract Documents or as directed by the Owner.

K. Mobilization and Preparatory Work (Bid Item No. 11). Payment for mobilization and preparatory work according to these Contract Documents will be made at the lump sum price bid therefor in the schedule. The lump sum price for mobilization shall include compensation for the movement of personnel, equipment, supplies and incidentals to the Site; for the establishment of any offices and temporary facilities and services at or near the Site; for the securing of permits required for the Work and occupancy rights to lands incidental to the Work; for payment of premiums for bonds and insurance for the Work; for any necessary costs of acquisition of equipment, including purchase and

mobilization; and for any other Work and operations which must be performed or costs that must be incurred incident to the initiation of meaningful work at the site and for which payment is not otherwise provided for in other bid items.

When other bid items are adjusted, mobilization and preparatory work costs will be deemed to have been recovered by the Contractor by the payments made for mobilization and preparatory work, and will be excluded from consideration in determining compensation therefor. Progress payments for mobilization and preparatory work shall be subject to retainage as provided within these Specifications.

Progress payments for mobilization and preparatory work will be made as follows:

1. For the first progress payment (after the date of the Notice to Proceed), 40 percent of the amount bid for mobilization and preparatory work will be allowed.

2. When 25 percent of the total original Contract Amount is earned from other schedule items, an additional 20 percent of the amount bid for mobilization and preparatory work will be allowed.

3. When 50 percent of the total original Contract Amount is earned from other bid schedule items, an additional 20 percent of the amount bid for mobilization and preparatory work will be allowed.

4. When 75 percent of the total original Contract Amount is earned from other schedule items, an additional 10 percent of the amount bid for mobilization and preparatory work will be allowed.

5. When 90 percent of the total original Contract Amount is earned from other schedule items, the final 10 percent of the amount bid for mobilization and preparatory work will be allowed.

L. Furnish and Install 32-Inch HDPE Pipe in Paved Areas (Bid Item No. 12). Work to be done under this bid item is for the labor, materials, equipment and incidentals for the construction of the 32-inch HDPE pipe within concrete or asphalt concrete paved areas, complete and including all labor, materials, equipment and incidentals necessary to complete the pipeline installation as specified herein and as shown on the Drawings and up to one foot deeper than shown on the Drawings, including, but not limited to, the following:

1. HDPE pipe, fittings and appurtenances.
2. Sawcut of pavement(s) for trench excavation.
3. Excavation of trench, removal, and storage or disposal of excavated material, inclusive of all hauling to and from storage area(s) or final disposal site.
4. Dewatering and water disposal.
5. Support of existing utilities.

6. Installation of all necessary temporary construction and safety devices, such as formworks, falseworks, and ladders, but not including trench shoring which is included in Bid Item No. 13.
7. Trench trimming and preparation of trench.
8. Pipe preparation and assembly, including all necessary outlets, connections, restraints, and installation into trench.
9. Placement of tracer wire and warning tape.
10. Installation of bedding and backfill materials, including sand, cement-sand slurry, soil-slurry, or soil-cement, select granular material, compaction of backfill materials and other associated work.
11. Temporary paving.
12. Permanent pavement restoration.

This bid item does not include 32-inch HDPE pipe to be installed within steel casings. Payment for this Bid Item will be made at the unit price bid therefor in the Bid Schedule, complete and in place in accordance with the Contract Documents or as directed by the Owner. Length of 32-inch pipe will be measured on the center line of the pipe as computed from the pipeline slope distance as installed, including space along the centerline occupied by fittings and outlets. Length at fabricated bends will be measured along the centerline sub-tangents.

M. Furnish and Install 32-inch HDPE Pipe in Unpaved Areas (Bid Item No. 13). Work to be done under this bid item is for the labor, materials, equipment and incidentals for the construction of the 32-inch HDPE pipe within unpaved areas, complete and including all labor, materials, equipment and incidentals necessary to complete the pipeline installation as specified herein and as shown on the Drawings and up to one foot deeper than shown on the Drawings, including, but not limited to, the following:

1. HDPE pipe, fittings and appurtenances.
2. Excavation of trench, removal, and storage or disposal of excavated material, inclusive of all hauling to and from storage area(s) or final disposal site.
3. Dewatering and water disposal.
4. Support of existing utilities.
5. Installation of all necessary temporary construction and safety devices, such as formworks, falseworks, and ladders, but not including trench shoring which is included in Bid Item No. 13.
6. Trench trimming and preparation of trench.
7. Pipe preparation and assembly, including all necessary outlets, connections, restraints, and installation into trench.
8. Placement of tracer wire and warning tape.
9. Installation of bedding and backfill materials, including sand, cement-sand slurry, soil-slurry, or soil-cement, select granular material, compaction of backfill materials and other associated work.
10. Hardscape and landscape restoration.

This bid item does not include 32-inch HDPE pipe to be installed within steel casings. Payment for this Bid Item will be made at the unit price bid therefor in the Bid

Schedule, complete and in place in accordance with the Contract Documents or as directed by the Owner. Length of 32-inch pipe will be measured on the center line of the pipe as computed from the pipeline slope distance as installed, including space along the centerline occupied by fittings and outlets. Length at fabricated bends will be measured along the centerline sub-tangents.

N. Furnish and Install Sheeting, Shoring, Bracing or Sloping of Excavations (Bid Item No. 14). Work to be done under this bid item is for the labor, materials, equipment and incidentals for providing, installing, and subsequent removal after use of adequate sheeting, shoring, and bracing or sloping of trenches and other excavations, complete and including all materials, labor, equipment and incidentals necessary to protect and construct facilities specified herein and as shown on the Drawings for the installation of the 32-inch HDPE pipe and appurtenances. This excludes work related to construction of steel casings which is included elsewhere.

Payment for this bid item will be made at the lump sum price bid therefor in the Bid Schedule, complete and in place in accordance with the Contract Documents or as directed by the Owner.

O. 30-Inch Manhole Outlet on 32-Inch HDPE Pipe and Concrete Manhole Access Structure (Bid Item No. 15). Work to be done under this bid item is for the labor, materials, equipment and incidentals for 30-inch HDPE manhole assemblies on 32-inch HDPE pipe including joining to 32-inch HDPE pipe, pre-cast concrete manholes, concrete base, outlets, flanges, blind flanges, hardware, and small valves as indicated and in accordance with the Contract Documents. Additionally, work to be done under this bid item is for the labor, materials, equipment and incidentals required for the complete installation of pre-cast concrete access manhole structures, including required additional excavation, aggregate base, dewatering and water disposal, concrete work, concrete manhole structure, backfill, pavement restoration, metal work, manhole frame and cover, water proofing and other pertinent work, as specified herein and as shown on the Drawings.

Payment for this bid item will be made at the unit price bid therefor in the Bid Schedule, complete in place in accordance with the Contract Documents or as directed by the Owner.

P. 8-inch Outlet on 32-inch HDPE Pipe (Bid Item No. 16). This bid item is for the labor, materials, equipment and incidentals for 8-inch outlet assembly on 32-inch HDPE pipe including outlet, 8-inch HDPE piping and fittings, flanged adaptor and flange; but not including valves, welded steel piping and other items indicated to be attached to outlets, all of which will be paid for separately.

Payment for this bid item will be made at the unit price bid therefor in the Bid Schedule, complete in place in accordance with the Contract Documents or as directed by the Owner.

Q. 6-inch Outlet on 32-inch HDPE Pipe (Bid Item No. 17). This bid item is for the labor, materials, equipment and incidentals for 6-inch outlet assembly on 32-inch HDPE pipe including outlet, 6-inch HDPE piping and fittings, flanged adaptor and flange; but not including valves, welded steel piping and other items indicated to be attached to outlets, all of which will be paid for separately.

Payment for this bid item will be made at the unit price bid therefor in the Bid Schedule, complete in place in accordance with the Contract Documents or as directed by the Owner.

R. Furnish and Install 42-Inch Steel Casing No. 1 and 32-Inch HDPE Pipe and Connections (Bid Item No. 18). Work to be done under this bid item is for the labor, materials, equipment and incidentals for the complete installation of a 42-inch Steel Casing No. 1 and 32-inch HDPE carrier pipe including all excavation, tunneling, dewatering and water disposal, casing, 32-inch HDPE pipe 10 feet beyond the ends of the casing, utility protection, pressure grouting, filling voids and annular space, end seals, hauling excess materials, backfill of tunnel shafts with cement-sand slurry, surface restoration, temporary traffic control and striping, and other associated work.

Payment for this bid item will be made at the lump sum bid therefor in the Bid Schedule, complete and in place in accordance with the Contract Documents or as directed by the Owner.

S. Furnish and Install 42-Inch Steel Casing No. 2 and 32-Inch HDPE Pipe and Connections (Bid Item No. 19). Work to be done under this bid item is for the labor, materials, equipment and incidentals for the complete installation of a 42-inch Steel Casing No. 1 and 32-inch HDPE carrier pipe including all excavation, tunneling, dewatering and water disposal, casing, 32-inch HDPE pipe 10 feet beyond the ends of the casing, utility protection, pressure grouting, filling voids and annular space, end seals, hauling excess materials, backfill of tunnel shafts with cement-sand slurry, surface restoration, temporary traffic control and striping, and other associated work.

Payment for this bid item will be made at the lump sum bid therefor in the Bid Schedule, complete and in place in accordance with the Contract Documents or as directed by the Owner.

T. Furnish and Install 42-Inch Steel Casing No. 3 and 32-Inch HDPE Pipe and Connections (Bid Item No. 20). Work to be done under this bid item is for the labor, materials, equipment and incidentals for the complete installation of a 42-inch Steel Casing No. 3 and 32-inch HDPE carrier pipe including all excavation, tunneling, dewatering and water disposal, casing, 32-inch HDPE pipe 10 feet beyond the ends of the casing, utility protection, pressure grouting, filling voids and annular space, end seals, hauling excess materials, backfill of tunnel shafts with cement-sand slurry, surface restoration, temporary traffic control and striping, and other associated work.

Payment for this bid item will be made at the lump sum bid therefor in the Bid Schedule, complete and in place in accordance with the Contract Documents or as directed by the Owner.

U. Tracer System Electrical Continuity Testing (Bid Item No. 21). Work to be done under this bid item is for the labor, materials, equipment and incidentals for the complete tracer wire system electrical continuity testing, temporary traffic control and striping, and any other required materials and equipment to complete the electrical continuity testing.

Payment for this bid item will be made at the lump sum price bid therefor in the Bid Schedule, complete and approved in accordance with the Contract Documents or as directed by the Owner.

V. Potholing and Pothole Report (Bid Item No. 22). Work to be done under this bid item is for the labor, materials, equipment and incidentals to perform all exploratory utility investigation and associated works including preparation and submittal of pothole report in accordance with General Conditions 5.25 and the Drawings.

Payment for this bid item will be made at the lump sum price bid therefor in the Bid Schedule, complete and in place in accordance with the Contract Documents or as directed by the Owner.

W. Blow-off No. 1 at Suction Side Pipeline Station and Discharge Side Pipeline Station (Bid Item No. 23). Work to be done under this bid item is for the labor, materials, equipment and incidentals required for the complete installation of Blow-off No. 1, including all excavation, dewatering and water disposal, backfill, surface restoration, suction and discharge piping, fittings, flanges, valves, concrete manholes, concrete work, temporary traffic control and striping, metal work and other associated work as specified herein and as shown on the Drawings, but not including 8-inch outlets on 30-inch welded steel or 32-inch HDPE pipe.

Payment for this bid item will be made at the lump sum bid therefor in the Bid Schedule, complete and in place in accordance with the Contract Documents or as directed by the Owner.

X. Blow-off No. 2 at Suction Side Pipeline Station and Discharge Side Pipeline Station (Bid Item No. 24). Work to be done under this bid item is for the labor, materials, equipment and incidentals required for the complete installation of Blow-off No. 2, including all excavation, dewatering and water disposal, backfill, surface restoration, suction and discharge piping, fittings, flanges, valves, concrete manholes, concrete work, temporary traffic control and striping, metal work and other associated work as specified herein and as shown on the Drawings, but not including 8-inch outlets on 30-inch welded steel or 32-inch HDPE pipe.

Payment for this bid item will be made at the lump sum bid therefor in the Bid Schedule, complete and in place in accordance with the Contract Documents or as directed by the Owner.

Y. 6-Inch Automatic Vacuum and Air Release Valve Assembly No. 1 and Piping at Pipeline Station (Bid Item No. 25). Work to be done under this bid item is for the labor, materials, equipment and incidentals required for the installation of 6-inch automatic vacuum and air release valve assembly No. 1 at pipeline station including all excavation, dewatering and water disposal, backfill, surface restoration, piping, fittings, flanges, valves, concrete work, pre-cast concrete manhole, temporary traffic control and striping, metal work and other associated work as specified herein and as shown on the Drawings, but not including 6-inch outlets on 30-inch welded steel or 32-inch HDPE pipe.

Payment for this bid item will be made at the lump sum bid therefor in the Bid Schedule, complete and in place in accordance with the Contract Documents or as directed by the Owner.

Z. 6-Inch Automatic Vacuum and Air Release Valve Assembly No. 2 and Piping at Pipeline Station (Bid Item No. 26). Work to be done under this bid item is for the labor, materials, equipment and incidentals required for the installation of 6-inch automatic vacuum and air release valve assembly No. 2 at pipeline station including all excavation, dewatering and water disposal, backfill, surface restoration, piping, fittings, flanges, valves, concrete work, pre-cast concrete manhole, temporary traffic control and striping, metal work and other associated work as specified herein and as shown on the Drawings, but not including 6-inch outlets on 30-inch welded steel or 32-inch HDPE pipe.

Payment for this bid item will be made at the lump sum bid therefor in the Bid Schedule, complete and in place in accordance with the Contract Documents or as directed by the Owner.

AA. Video Inspection of All Mainline Pipe (Bid Item No. 27). Work to be done under this bid item is for the labor, materials, equipment and incidentals for the video inspection of all mainline 30-inch welded steel or 32-inch HDPE pipe, including video equipment, video media transfer and duplication and any additional services as required to provide the Owner with a DVD which completely shows the interior condition of the installed pipe.

BB. Flushing and Testing of all Water System Components (Bid Item No. 28). Work to be done under this bid item is for the labor, materials, equipment and incidentals for the complete flushing and testing of all pipelines and appurtenances, including water, temporary bulkheads or pipe caps, valves, gauges, air inlets/outlets, dechlorination chemicals, temporary traffic control and striping, and any other required materials and equipment to complete the flushing and testing.

Payment for this bid item will be made at the lump sum price bid therefor in the Bid Schedule, complete and approved in accordance with the Contract Documents or as directed by the Owner.

CC. Prepare, Furnish, Install and Maintain all SWPPP Required Controls (Bid Item No. 29). Work to be done under this bid item is for the labor, materials, equipment and incidentals in preparation and implementation of the SWPPP and for the installation, maintenance and removal of all SWPPP required controls and BMPs required for the construction of the Work.

Payment for this bid item will be made at the lump sum price bid therefor in the Bid Schedule, complete and in place in accordance with the Contract Documents or as directed by the Owner.

DD. Temporary Traffic Control and Striping (Bid Item No. 30). Work to be done under this bid item is for the labor, materials, equipment and incidentals for the complete installation of temporary traffic control during the course of the Work, including traffic control subcontractor, flagger personnel, k-rails, various signs, electronic changeable message signs, sign lighting, striping removal, temporary striping, painting, pavement markers, flagmen, removing and replacing traffic control devices in accordance with these Contract Documents and applicable encroachment permits.

Work to be done under this bid item also includes preparation of any additional traffic control plans necessary to perform the Work and obtaining approval of those plans from the Owner and County of Ventura. Such additional traffic control plans include, but are not limited to, those necessary to perform potholing, install permanent pavement and asphalt overlays, perform video inspection of the pipeline through access manholes, transport water from trench dewatering and testing, and install pipeline appurtenances.

Payment for this bid item will be made at the lump sum price bid therefor in the Bid Schedule, complete and in place in accordance with the Contract Documents or as directed by the Owner.

EE. Utility Support and Protection in Place of Interfering Utilities Not Shown on the Drawings Per Standard Drawing 1102 (Bid Item No. 31). Work to be done under this bid item is for labor, materials, equipment and incidentals required for the complete installation of utility supports and measures to be provided to protect all interfering utilities not shown on the Drawings in accordance with Standard Drawing No. 1102. This item does not include individual service laterals not shown on the plans which are to be supported and protected at no additional cost to the Owner.

Payment for this bid item will be made at the unit price bid therefor in the Bid Schedule, complete and in place only as directed in writing by the Owner and in accordance with the Contract Documents.

FF. Utility Support and Protection in Place of Interfering Utilities Not Shown on the Drawings Per Standard Drawing 1103 (Bid Item No. 32). Work to be done under this bid item is for labor, materials, equipment and incidentals required for the complete installation of utility supports and measures to be provided to protect all interfering utilities not shown on the Drawings in accordance with Standard Drawing No. 1103. This item does not include individual service laterals not shown on the plans which are to be supported and protected at no additional cost to the Owner.

Payment for this bid item will be made at the lump sum price bid therefor in the Bid Schedule, complete and in place only as directed in writing by the Owner and in accordance with the Contract Documents.

GG. Net Increase or Decrease for Removal of Pavement in Thickness Increments of 1 Inch Along Full Width of Trench for 30-Inch Welded Steel or 32-Inch HDPE Pipe (Bid Item No. 33). Work to be done under this bid item is for the labor, materials, equipment and incidentals for a 1-inch thick pavement cutting and removal along entire width of trench for 30-inch welded steel or 32-inch HDPE pipe. This Bid Item will apply where pavement thickness in the field differs from the thickness shown on the Drawings.

Payment for this bid item or reduction in Contract Amount will be made at the unit price bid therefor in the Bid Schedule, complete and in place for an increase in work or deleted from the Work for a decrease in work in accordance with the Contract Documents and as directed by the Owner.

HH. Net Increase or Decrease for Removal of Pavement in Thickness Increments of 1 Inch along Full Width of Trench for 6-Inch and 8-Inch Pipe (Bid Item No. 34). Work to be done under this bid item is for the labor, materials, equipment and incidentals for a 1-inch thick pavement cutting and removal along entire width of trench for 6-inch and 8-inch pipe. This Bid Item will apply where pavement thickness in the field differs from the thickness shown on the Drawings.

Payment for this bid item or reduction in Contract Amount will be made at the unit price bid therefor in the Bid Schedule, complete and in place for an increase in work or deleted from the Work for a decrease in work in accordance with the Contract Documents and as directed by the Owner.

II. Asphalt Overlay (Bid Item No. 35). Work to be done under this bid item is for the labor, materials, equipment and incidentals for the grinding of existing paving, removal and disposal of asphalt concrete and paving fabrics, complete installation of tack coat, pavement fabric under conventional asphalt, rubberized and conventional asphalt overlay, temporary traffic control and striping, and other associated work in accordance with the Contract Documents.

Payment for this bid item will be made at the lump sum price bid therefor in the Bid Schedule, complete and in place in accordance with the Contract Documents or as directed by the Owner.

JJ. Net Increase or Decrease in Conventional Asphalt Overlay (Bid Item No. 36). Work to be done under this bid item is for the labor, materials, equipment and incidentals for the Owner directed increase or decrease in conventional asphalt overlay area beyond what is shown in the Contract Documents, including pavement removal, asphalt overlay, traffic control and other associated work in accordance with the Contract Documents.

Payment for this bid item or reduction in Contract Amount will be made at the unit price bid therefor in the Bid Schedule, complete and in place for an increase in work or deleted from the Work for a decrease in work in accordance with the Contract Documents and as directed by the Owner.

KK. Permanent Pavement Striping and Markings (Bid Item No. 37). Work to be done under this bid item is for the labor, materials, equipment and incidentals, including temporary traffic control and striping, for the complete installation of permanent pavement striping and marking in accordance with the Contract Documents.

Payment for this bid item will be made at the lump sum price bid therefor in the Bid Schedule, complete and in place in accordance with the Contract Documents or as directed by the Owner.

LL. Net Increase in Depth of 30-Inch Welded Steel or 32-Inch HDPE Pipe Installation in Depth Increments of 12 Inches (Bid Item No. 38). The purpose of this bid item is to compensate the Contractor if the Owner directs the Contractor in writing to install the 30-inch welded steel or 32-inch HDPE pipe more than one foot deeper than shown on the Drawings, including labor, materials, equipment and incidentals, and for hauling of excavated materials. This direction is typically given if utilities found during potholing or pipeline installation activities necessitate a realignment of the pipe, but it may be given for other reasons.

This bid item compensates the Contractor for each additional foot of depth or fraction thereof, not including the first foot, up to a total pipe invert depth of fifteen feet below finished grade. Modifications requiring greater depths will be paid for according to the procedures outlined in the Extra Work section of the General Conditions.

Work to be done under this bid item includes all labor, materials, equipment and incidentals associated with installing each additional foot of depth or fraction thereof deeper than shown on the Drawings, not including the first foot, up to a total pipe invert depth of fifteen feet below finished grade if directed by the Owner. This work includes, but is not limited to, the following incremental work beyond installation work shown on the Drawings:

1. Dewatering and water disposal.
2. Excavation and shoring of trench and removal, storage or disposal of excavated materials, inclusive of all hauling to and from storage area(s) or final disposal site.
3. Utility supports.
4. Trench trimming and preparation of trench.
5. Excavation of trench deeper than shown on the Drawings.

6. Pipe preparation and assembly and installation into trench.
7. Placement of pipe bedding and trench backfilling, including cement-sand slurry, soil-slurry, or soil-cement, sand, and compaction.

The bid item is to be paid on a linear foot basis and does not include increases in pipe depth of one foot or less, which are to be provided at no additional cost to the Owner. The example below is provided for clarity. The numbers are provided for example only and have no contractual relevance.

Example Situation: The pipe is to be installed 2.5 feet deeper for a distance of 30 linear feet, 2 feet deeper for a distance of 20 linear feet, and 0.5 feet deeper for a distance of 20 linear feet.

Bid Amount: $30 per LF

Calculation of Total Compensation: The first additional foot of depth is provided at no additional cost so calculate as follows:

(1.5 ft x 30 LF x $30/LF) + (1 ft x 40 LF x $30/LF) =
$1,350 + $1,200 = $2,550

Payment for this bid item in Contract Amount will be made at the unit price bid therefor in the Bid Schedule, complete and in place for an increase in work only as directed in writing by the Owner and in accordance with the Contract Documents.

MM. Net Increase in Depth of 6-Inch or 8-Inch Installation in Depth Increments of 12 Inches (Bid Item No. 39). The purpose of this bid item is to compensate the Contractor if the Owner directs the Contractor in writing to install 6-inch or 8-inch diameter pipe more than one foot deeper than shown on the Drawings, including labor, materials, equipment and incidentals, and for hauling of excavated materials. This direction is typically given if utilities found during potholing or pipeline installation activities necessitate a realignment of the pipe, but it may be given for other reasons.

This bid item compensates the Contractor for each additional foot of depth or fraction thereof, not including the first foot, up to a total pipe invert depth of fifteen feet below finished grade. Modifications requiring greater depths will be paid for according to the procedures outlined in the Extra Work section of the General Conditions.

Work to be done under this bid item includes all labor, materials, equipment and incidentals associated with installing each additional foot of depth or fraction thereof deeper than shown on the Drawings, not including the first foot, up to a total pipe invert depth of fifteen feet below finished grade if directed by the Owner. This work includes, but is not limited to, the following incremental work beyond installation work shown on the Drawings:

1. Dewatering and water disposal.
2. Excavation and shoring of trench and removal, storage or disposal of excavated materials, inclusive of all hauling to and from storage area(s) or final disposal site.
3. Utility supports.

4. Trench trimming and preparation of trench.
5. Excavation of trench deeper than shown on the Drawings.
6. Pipe preparation and assembly and installation into trench.
7. Placement of pipe bedding and trench backfilling, including cement-sand slurry, soil-slurry, or soil-cement, sand, and compaction.

The bid item is to be paid on a linear foot basis and does not include increases in pipe depth of one foot or less, which are to be provided at no additional cost to the Owner. The example below is provided for clarity. The numbers are provided for example only and have no contractual relevance.

Example Situation: The pipe is to be installed 2.5 feet deeper for a distance of 30 linear feet, 2 feet deeper for a distance of 20 linear feet, and 0.5 feet deeper for a distance of 20 linear feet.

Bid Amount: $30 per LF

Calculation of Total Compensation: The first additional foot of depth is provided at no additional cost so calculate as follows:

(1.5 ft x 30 LF x $30/LF) + (1 ft x 40 LF x $30/LF) =
$1,350 + $1,200 = $2,550

Payment for this bid item in Contract Amount will be made at the unit price bid therefor in the Bid Schedule, complete and in place for an increase in work only as directed in writing by the Owner and in accordance with the Contract Documents.

NN. Furnish and Install Crushed Rock for 30-Inch Welded Steel or 32-Inch HDPE Pipe as Directed by Owner (Bid Item No. 40). Work to be done under this bid item is for the labor, materials, equipment and incidentals for the complete installation of crushed rock and geotextile filter fabric, resulting from ordered changes in removal of unsuitable materials of the entire width of the trench for 30-inch pipe in accordance with these Specifications.

This Bid Item is not used to pay for crushed rock required as a result of the Contractor's errors or failure to dewater the trench bottom in accordance with the requirements of the Contract Documents. See Paragraph 3.03 of Section 02220 for further information regarding excavations below grade.

Payment for this bid item will be made at the unit price bid therefor in the Bid Schedule, complete and in place only as directed in writing by the Owner and in accordance with the Contract Documents.

OO. Provide One Traffic Control Flag Person for an 8-Hour Period as Directed by the Owner (Bid Item No. 41). This Bid Item is for a traffic control flag person not shown on the Drawings or necessary to implement traffic control plans prepared by the Contractor, the cost of which are to be included elsewhere. This Bid Item shall be used if the Owner directs the Contractor in writing to use more flag persons than are shown on the Drawings.

Payment for this bid item will be made at the unit price bid therefor in the Bid Schedule, only as directed in writing by the Owner and in accordance with the Contract Documents.

PP. Furnish and Deliver Additional 30-inch Welded Steel or 32-Inch HDPE Pipe (Bid Item No. 42). Work to be done under this bid item is for furnishing and delivery to the Owner's yard, four 30-inch diameter welded steel 20-foot plain end by bell pipes or 32-inch HDPE plain end pipes including all ground bunkers and protective coverings.

Payment for this bid item will be made at the lump sum price bid therefor in the Bid Schedule, complete and in place in accordance with the Contract Documents or as directed by the Owner.

QQ. Removal of Obstruction Larger than 80% of the Pipe Casing During Pipe Ramming Casing Installation (Bid Item No. 43). Work to be done under this Bid Item is for labor, materials, equipment and incidentals required for the complete removal of obstructions larger than 80% of the pipe casing outer diameter during pipe ramming casing installation beyond the first two obstructions larger than 80% of the pipe casing outer diameter which are included as a part of Bid Item Nos. 8, 9, and 10 or 18, 19, and 20 for trenchless casing installation. This item includes cost for any delays in work, removal and disposal of obstruction, and continuation of boring.

Payment for this bid item will be made at the unit price bid therefor in the Bid Schedule, only as directed in writing by the Owner and in accordance with the Contract Documents.

RR. Removal of Obstruction Larger than 1/3 of the Pipe Casing During Auger Boring Casing Installation (Bid Item No. 44). Work to be done under this Bid Item is for labor, materials, equipment and incidentals required for the complete removal of obstructions larger than 1/3 of the pipe casing outer diameter during pipe ramming casing installation beyond the first three obstructions larger than 1/3 of the pipe casing outer diameter which are included as a part of each Bid Item Nos. 8, 9, and 10 or 18, 19, and 20 for trenchless casing installation. This item includes cost for any delays in work, removal and disposal of obstruction, and continuation of boring.

Payment for this bid item will be made at the unit price bid therefor in the Bid Schedule, only as directed in writing by the Owner and in accordance with the Contract Documents.

END OF SECTION

This page intentionally left blank.

TECHNICAL PROVISIONS

SECTION 01300

SUBMITTALS

PART 1 - GENERAL

1.01 DESCRIPTION OF REQUIREMENTS

A. This Section specifies the general methods and requirements of submissions applicable to the following work-related submittals: Shop Drawings, Product Data, Manuals, Samples, Survey Data, Calculations and Construction or Submittal Schedules. Detailed submittal requirements are specified in other sections of these Specifications.

B. All submittals shall be clearly identified by reference to Specifications Section, Paragraph and Drawing No. or Detail as applicable. Submittals shall be clear and legible and of sufficient size for sufficient presentation of data. The "Submittal Transmittal/Certification Form" and the "P.E. Certification Form" to be used with each submittal are included at the end of this Section.

1.02 SHOP DRAWINGS, PRODUCT DATA AND SAMPLES

A. Shop Drawings

1. Shop Drawings, as defined in the General Conditions, and as specified in individual work sections include, but are not necessarily limited to, custom-prepared data such as fabrication and erection/installation (working) drawings, design calculations, lists, graphs, operating instructions, schedule information, setting diagrams, actual shopwork manufacturing instructions, custom templates, special wiring diagrams, coordination drawings, individual system or equipment inspection and test reports, including performance curves and certifications, as applicable to the Work.

2. All details on Shop Drawings submitted for review shall show clearly the relation of the various parts of the Work and control lines; and where correct fabrication of the Work depends upon field measurements, such measurements shall be made and noted on the drawings before being submitted for review.

3. At the request of the Engineer, submittals for equipment specified under Divisions 1, 2, 11, and 13 shall include a listing of all installations where identical or similar equipment has been installed and been in operation for a period of at least five years unless otherwise indicated as longer in these Specifications.

B. Product Data

1. Product data specified in individual sections include, but are not necessarily limited to, standard prepared data for manufactured products (sometimes referred to as catalog data), such as the manufacturer's product specification and installation instructions, availability of colors and patterns, manufacturer's printed statements of compliance and applicability, roughing-in diagrams and templates, catalog cuts, product photographs, standard wiring diagrams, printed performance curves and operational-range diagrams, production or quality control inspection and test reports and certifications, mill reports, product operating and maintenance instructions and recommended spare-parts listing and printed product warranties, as applicable to the work.

2. Each copy of product data must be clear and legible with the product intended to be supplied clearly marked where multiple products are available.

C. Samples

1. Samples specified in individual sections include, but are not necessarily limited to, physical examples of the work, such as sections of manufactured or fabricated work, small cuts or containers of materials, complete units of repetitively-used products, color/texture/pattern swatches and range sets, specimens for coordination of visual effect, graphic symbols and units of work to be used by the Owner for independent inspection and testing, as applicable to the Work.

D. Statement of Qualifications

1. Where required by the Specifications, excepting qualifying experience which is submitted as a part of the Proposal section of the Specifications, provide sufficient information on work for which qualifying experience is sought, including job name, contact name, contact phone number, and job description.

2. Work for which an individual or company wishes to submit as qualifying experience shall not be subcontracted work and must have been performed by the individual or the company's own forces.

3. All qualifying experience must be current (e.g., If 5 years of experience is required, then all work for which qualifying experience is to be considered must have been performed in the last 5 contiguous years).

4. Accurate, adequate and verifiable information which demonstrates the Contractor's or the Contractor's subcontractor experience as required in the Specifications. This includes submittals for the Contractor's Superintendent, Project Manager, third party traffic control company, pavement striping and marking, and others as specified in the Specifications.

5. Contact information used for qualifying experience shall be verified by the Contractor as being accurate and current. Failure to submit verifiable and accurate information may result in rejection of the entire submittal.

1.03 CONTRACTOR'S RESPONSIBILITIES

A. The Contractor shall review Shop Drawings, product data and samples, including those by subcontractors, prior to submission to determine and verify the following:

1. Field measurements.

2. Field construction criteria.

3. Catalog numbers and similar data.

4. Conformance with the Contract Documents.

B. Each Shop Drawing, sample and product data submitted by the Contractor shall have as the first sheet affixed to it a properly filled out Submittal Transmittal/Certification Form which includes a certification statement signed by the Contractor which says:

"Certification Statement: By this submittal, I hereby represent that I have determined and verified all field measurements, field construction criteria, materials, dimensions, catalog numbers and similar data and I have checked and coordinated each item with other applicable shop drawings and all Contract requirements."

A digital copy of the Submittal Transmittal/Certification form is available to the Contractor upon request in both Microsoft Word version 2002 and Adobe Portable Document (PDF) formats.

C. Shop Drawings and product data sheets 11-in. x 17-in. or 8 1/2 in. x 11 in. shall be bound together in an orderly fashion and bear the above Certification Statement on the cover sheet. The cover sheet shall fully describe the packaged data and include a listing of all items within the package. Provide to the Engineer a copy of each submittal transmittal sheet for Shop Drawings, product data and samples at the time of submittal of said drawings, product data and samples to the Engineer.

D. The Contractor shall utilize a 9-character submittal identification numbering system in the following manner:

1. The first three digits shall be the numbers 001-999 to sequentially number each initial separate item or drawing submitted.

2. The next character shall be a letter, A-Z, indicating the submission, or resubmission of the same drawing, i.e., A=1st submission, B=2nd submission, C=3rd submission, etc.
3. The last five digits shall be the applicable Specification Section Number.

A typical submittal number would be as follows: 018-B-13122

018	=	The eighteenth initial submittal
B	=	The second submission (first resubmission) of that particular Shop Drawing
13122	=	Specifications Section number

E. Notify the Engineer in writing, at the time of submittal, of any deviations in the submittals from the requirements of the Contract Documents. Engineer reviewed and accepted submittal which contains deviations from the requirements of the Contract Documents which are not brought to the attention of the Engineer in writing may result in the removal and/or replacement of work at the sole expense of the Contractor. In no way shall an Engineer reviewed and accepted submittal be construed as acceptance of deviations from the requirements of the Contract Documents not brought to the attention of the Engineer.

F. The review of Shop Drawings, samples or product data by the Engineer shall not relieve the Contractor from his/her responsibility with regard to the fulfillment of the terms of the Contract. All risks of error and omission are assumed by the Contractor, and the Owner and Engineer will have no responsibility therefor.

G. No portion of the Work requiring a Shop Drawing, sample, or product data shall be started, nor shall any materials be fabricated or installed, prior to the review and acceptance or qualified review of such item. Fabrication performed, materials purchased or on-site construction accomplished which does not conform to Engineer reviewed and accepted Shop Drawings and data shall be at the Contractor's risk. The Owner will not be liable for any expense or delay due to corrections or remedies required to accomplish conformity.

H. Project work, materials, fabrication, and installation shall conform to Engineer reviewed and accepted Shop Drawings, applicable samples, and product data.

I. Shop Drawings shall be clear and legible. Facsimile copies or copies which are not easily legible in the opinion of the Owner or Engineer may be rejected prior to review for resubmittal of more legible documents.

1.04 SUBMISSION REQUIREMENTS

A. Make submittals promptly in accordance with approved schedule, and in such sequence as to cause no delay in the Work or in the work of any other contractor.

B. Each submittal, appropriately coded, will be returned to the Contractor within fifteen (15) Working Days following receipt of submittal by the Engineer.

C. Number of submittals required:

1. Shop Drawings: Two copies for the Owner, one copy for the Engineer and any additional copies to be returned to the Contractor, to a maximum of seven total submitted copies.

2. Product Data: Seven copies.

3. Samples: Submit the number stated in the respective Specifications sections.

4. Statement of Qualifications: Submit the number stated in the Specifications or three copies if not otherwise specified.

D. Submittals shall contain:

1. A properly filled out Submittal Transmittal/Certification Form containing:

a. The date of submission and the dates of any previous submissions.

b. The project title and number.

c. Contractor identification.

d. The names and telephone numbers of the supplier and manufacturer.

e. Submittal identification number.

2. Field dimensions, clearly identified as such.

3. Applicable standards, such as ASTM or Federal Specification numbers.

4. Identification of deviations from Contract Documents.

5. Identification of revisions on resubmittals.

6. Certifications, as required

1.05 REVIEW OF SHOP DRAWINGS, PRODUCT DATA, WORKING DRAWINGS AND SAMPLES

A. The review of Shop Drawings, data, and samples will be for general conformance with the design concept and Contract Documents. They shall not be construed:

1. as permitting any departure from the Contract requirements.

2. as relieving the Contractor of responsibility for any errors, including details, dimensions, and materials.

3. as approving departures from details furnished by the Owner, except as otherwise provided herein.

B. The Contractor remains responsible for details and accuracy, for coordinating the Work with all other associated work and trades, for selecting fabrication processes, for techniques of assembly, and for performing work in a safe manner.

C. If the Shop Drawings, data or samples as submitted describe variations and show a departure from the Contract requirements which the Engineer finds to be in the interest of the Owner and to be so minor as not to involve Extra Work, the Engineer may return the reviewed drawings without noting an exception.

D. Submittals will be returned to the Contractor under one or more of the following categories. Examples of the "Submittal/Shop Drawing Review" statements are included at the end of this Section.

"NO EXCEPTION TAKEN" is assigned when there are no notations or comments on the submittal. The Contractor is thereby allowed to begin fabrication and/or procurement of the material/equipment.

"MAKE CORRECTIONS NOTED - NO RESUBMITTAL REQUIRED" is assigned when notations or comments are marked on the submittal. The Contractor shall make the noted corrections, but no review resubmission of the submittal is required. The Contractor is thereby allowed to begin fabrication and/or procurement of the material/equipment; however, all notations and comments must be incorporated into the final product.

The Contractor may be requested to provide a final submittal.

"MAKE CORRECTIONS NOTED AND RESUBMIT" is assigned when the submittal notations or comments are marked on the submittal. The Contractor shall make the noted corrections and resubmit the entire submittal. The Contractor is not allowed to begin fabrication and/or procurement of the material/equipment.

"REJECTED-RESUBMIT" is assigned when the submittal is incomplete or does not meet the requirements of the Contract Documents as determined by the Engineer. The submittal may be only partially reviewed or not reviewed at all. The Contractor shall make necessary changes to bring the submittal into compliance with the Contract Documents and then resubmit the entire submittal package for Engineer's review. The Contractor shall not begin fabrication and/or procurement of the material/equipment.

"NOTED-COPY RETAINED" is assigned when the submittal does not require any review acceptance by the Engineer or Owner. Copies of such submittal will be retained for Owner's and Engineer's files.

E. Resubmittals will be handled in the same manner as first submittals. On resubmittals the Contractor shall direct specific attention, in writing, on the letter of transmittal and on resubmitted Shop Drawings by use of revision triangles or other similar methods, to revisions other than the corrections requested by the Engineer on previous submissions. Any such revisions which are not clearly identified within the submittal package shall be made at the risk of the Contractor. The Contractor shall make corrections to any work done because of this type of revision that is not in accordance with the Contract Documents as may be required by the Engineer.

F. Partial submittals may not be reviewed. The Engineer will be the sole judge as to the completeness of a submittal. Submittals not complete will be returned to the Contractor, and will be considered "Rejected" until resubmitted. The Engineer may at his/her option, provide a list or mark the submittal directing the Contractor to the areas that are incomplete.

G. Resubmittals shall be complete in all respects. Each comment made by the Engineer shall be addressed and reflected either by a change in submittal documents or by explanation by the Contractor in the transmittal letter. The Contractor's failure to address all comments may result in the submittal being returned only partially reviewed. Such partial review shall be counted as a complete review for purposes of Paragraph 1.05.I of this Section.

H. Resubmittals shall not contain markings of the Engineer from previous submittals.

I. Repetitive Review

1. Shop Drawings and other submittals will be reviewed no more than twice at the Owner's expense. All subsequent reviews will be performed at times convenient to the Engineer and at the Contractor's expense, based on the Engineer's Schedule of Rates specified in the Special Conditions. The Contractor shall reimburse the Owner for all such fees invoiced to the Owner. Submittals are required until they are reviewed and returned with no resubmittal required.

2. Any need for more than one resubmission, or any other delay in obtaining Engineer's review of submittals, will not entitle the Contractor to extension of the Time(s) for Completion or Fixed Calendar Dates.

J. If the Contractor considers any correction indicated on the Shop Drawings to constitute a change to the Contract Documents, the Contractor shall give prompt written notice thereof to the Owner and Engineer in accordance with the provisions of the General Conditions. Failure to give such written notice will indicate the Contractor's acceptance of said correction and will not entitle the Contractor to extension of the Time(s) for Completion or Fixed Calendar Dates or extra compensation.

K. When the Shop Drawings have been completed to the satisfaction of the Engineer, the Contractor shall carry out the construction in accordance therewith and shall make no further changes therein except upon written instructions from the Owner or Engineer.

L. In the event that the Shop Drawings are reviewed and accepted by the Engineer but do contain deviations from the Contract Document which are not specifically noted by the Contractor as specified in Paragraph 1.03E above, the Owner or Engineer, at their discretion, may reject such work, product or procedure at any time. The Contractor will not be granted Extra Work due to his failure to specifically notify the Engineer of a deviation from the Contract Documents.

M. Within twenty (20) Calendar Days after acceptance by the Engineer of any data or shop, assembly, or layout drawing, a final submittal shall be made with all corrections noted by the Engineer incorporated. This final submittal shall be clearly noted in the Contractor's transmittal as being a final submittal of accepted drawings or data and shall consist of four clear legible copies of all information on sheets up to double standard size, 11-inch x 17-inch, and one clear legible transparent print on vellum of all sheets larger than double standard size. Final submittals shall be forwarded directly to the Engineer.

N. One product or process for a particular application or portion of work may be submitted and will be reviewed by the Engineer in accordance with these Specifications. Products or processes submitted and intended to be an equivalent replacement or alternative to an already submitted product or process whether that already submitted product or process has been reviewed and accepted or not may, at the discretion of the Owner, be reviewed at the Contractor's expense, based on the Engineer's Schedule of Rates specified in the Special Conditions. The Contractor, at the Owner's discretion, may be required to reimburse the Owner for all such fees invoiced to the Owner.

1.06 DISTRIBUTION

A. Distribute reproductions of accepted Shop Drawings and copies of accepted product data and samples, where required, to the work site file and elsewhere as directed by the Owner.

1.07 SCHEDULES

A. Provide all schedules required elsewhere in these Specifications. Where not otherwise specified, submit two copies of each schedule.

1.08 PROFESSIONAL ENGINEER (P.E.) CERTIFICATION FORM

A. If specifically required in other sections of these Specifications, the Contractor shall submit a P.E. Certification Form for each item required, on the form at the end of this Section, completely filled in and stamped.

1.09 GENERAL PROCEDURES FOR SUBMITTALS

A. Coordination of Submittal Times: Prepare and transmit each submittal sufficiently in advance of performing the related work or other applicable activities or within the time specified in the individual work sections of the Specifications, whichever is earlier, so that the installation will not be delayed by processing times, including rejection and resubmittal (if required), coordination with other submittals, testing, purchasing, fabrication, delivery and similar sequenced activities. No Extra Work will be authorized because of the Contractor's failure to transmit and obtain acceptance of submittals sufficiently in advance of the work.

1.10 QUALITY CONTROL SUBMITTALS

A. Certificates:

1. Manufacturer's Certificate of Compliance:

   a. When specified in individual Specification sections or where products are specified to a recognized standard or code, submit prior to shipment of product or material to the Site.

   b. Engineer may permit use of certain materials or assemblies prior to sampling and testing if accompanied by accepted certification of compliance.

   c. Signed by product manufacturer certifying that materials, manufacture, and product specified conform to or exceed specified requirements and intent for which product will be used. Submit supporting reference data, affidavits, and certifications as appropriate.

   d. May reflect recent or previous test results on material or product, but must be acceptable to Engineer.

2. Certificates of Successful Testing or Inspection: Submit when testing or inspection is required by laws and regulations or governing agency or specified in the individual Specification sections.

B. Statements of Qualification: Evidence of qualification, certification, or registration. As required in these Contract Documents to verify qualifications of engineers, materials testing laboratories, specialty Subcontractors, trades, specialists, consultants, installers, and other professionals.

C. Written Test Reports of Each Test and Inspection: As a minimum, include the following:

1. Date of test and date issued, project title and number, testing laboratory name, address, and telephone number, and name and signature of laboratory inspector.

2. Date and time of sampling or inspection and record of temperature and weather conditions.

3. Identification of product and Specifications section, location of sample, test or inspection in the project, type of inspection or test with referenced standard or code, certified results of test.

4. Compliance with Contract Documents and identifying any corrective action necessary to bring materials and equipment into compliance.

5. Provide an interpretation of test results, when requested by Engineer.

1.11 SUBMITTAL LOG

A. The Contractor shall prepare and maintain an accurate submittal log for the duration of the project. The Contractor shall submit six copies of the initial submittal log listing all required submittals within 30 Calendar Days after Notice to Proceed. The Contractor shall submit six copies of the updated submittal log monthly and upon request of the Engineer or the Owner. The submittal log shall contain a listing of all submittals required by the Contract Documents and shall include the following.

   a. Submittal identification number
   b. Description of submittal item
   c. Projected submission date
   d. Actual submission date
   e. Date returned by the Engineer
   f. Notation of the Engineer's response
   g. Notation if resubmittal or record copy is required

PART 2 - PRODUCTS (NOT USED)

PART 3 - EXECUTION (NOT USED)

P. E. CERTIFICATION FORM

The undersigned hereby certifies that he/she is a Professional Engineer registered in the State of California and that he/she has been employed by _____ (Name of Contractor) to design: _____ located in_____, in accordance with Specifications Section _____ for the Construction of Salinity Management Pipeline, Phase 2c. The undersigned further certifies that he/she has performed the design of the

_____

_____

_____

_____

_____

_____

that said design is in conformance with all applicable local, state and federal codes, rules, and regulations, and that his/her signature and P.E. stamp have been affixed to all calculations and drawings used in, and resulting from, the design.

The undersigned hereby agrees to make all original design drawings and calculations available to the Calleguas Municipal Water District (Owner), whose address is 2100 Olsen Road, Thousand Oaks, California, 91360-6800 or the Owner's representative within seven (7) Calendar Days following written request therefor by the Owner.

_____	_____
P.E. Name (Printed) & Title	Contractor's Name (Printed) & Title
_____	_____
P.E.'s Signature	Contractor's Signature
_____	_____
Address	Address

Submittal Transmittal/Certification Form

Owner: Calleguas Municipal Water District

Project Name: Salinity Management Pipeline, Phase 2c

Specifications No.: 496

To: Perliter & Ingalsbe
2369 Lincoln Avenue
Altadena, California 91001
Attn: Rean David Kunitake

From:
Phone No.:
(Contractor's Name, Address, & Phone No.)

Submittal #:_____ Copies: _____

Submittal # - Submission - Section

Description: _____

_____

Supplier:_____ Phone No:_____

Manufacturer:_____ Phone No:_____

Additional Attachments:

☐ PE Certificate Required ☐ Identification of Deviations from Contract Docs.

☐ Identification of Revisions ☐ Certification Attached

☐ Field Dimensions Clearly Identified ☐ Other _____

Remarks: _____
_____
_____
_____
_____
_____

Certification Statement: By this submittal, I hereby represent that I have determined and verified all field measurements, field construction criteria, materials, dimensions, catalog numbers and similar data, and I have checked and coordinated each item with other applicable accepted Shop Drawings and all Contract requirements.

By:_____ _____ _____

Signature Print Name Date

Sample Shop Drawing Review Statements

NO EXCEPTION TAKEN

Date

PERLITER & INGALSBE
By:

MAKE CORRECTIONS NOTED – NO RESUBMITTAL REQUIRED

Date

PERLITER & INGALSBE
By:

MAKE CORRECTIONS NOTED AND RESUBMIT

X *Date* X

PERLITER & INGALSBE
By:

REJECTED – RESUBMIT

X *Date* X

PERLITER & INGALSBE
By:

NOTED – COPY RETAINED

Date

PERLITER & INGALSBE
By:

END OF SECTION

This page intentionally left blank.

TECHNICAL PROVISIONS

SECTION 01310

PROGRESS SCHEDULES

PART 1 - GENERAL

1.01 DESCRIPTION OF REQUIREMENTS

A. This Section specifies the general requirements for the preparation and submittal of the schedule of work.

1.02 SUBMITTALS

A. Submitted progress schedules shall be in Microsoft Project™ or approved equal and compatible, indicating the order in which the Contractor proposes to complete the Work, in strict compliance with the Contract Documents. Each schedule shall be subject to the approval of the Owner. Submit schedules in both hardcopy and digital format ("MPP" file for Microsoft Project files).

B. Preliminary Progress Schedule: Submit no later than the Pre-Construction Meeting.

C. Progress Schedule: Submit adjusted schedule or confirm validity of current schedule with each monthly Partial Estimate and at such other times as necessary to reflect (i) progress of Work to within 5 Working Days prior to submission; (ii) changes in Work scope and activities modified since submission; (iii) delays in submittals or resubmittals, deliveries, or Work; (iv) adjusted or modified sequences of Work; (v) other identifiable changes; and (vi) revised projections of progress and completion. The Owner's receipt and acceptance of the updated schedule shall be a condition precedent to the issuance of any portion of a progress payment for the preceding month.

D. Four-Week Schedule: Submit updated four-week schedules every Friday by 4 p.m. showing planned activities for the next four weeks.

1.03 PROGRESS OF THE WORK

A. If Contractor fails to complete activity by its latest scheduled completion date and this failure may cause the Contractor to fail to complete the Work or portions of the Work, as applicable, within the Time(s) for Completion or by the Fixed Calendar Dates set forth in the Special Conditions, the Contractor shall, within 7 Calendar Days of such failure, submit a written statement as to how Contractor intends to correct nonperformance and return to the acceptable current progress schedule. Actions by Contractor to complete Work within the Time(s) for Completion or by the Fixed Calendar Dates will not be considered Extra Work.

1.04 PRELIMINARY PROGRESS SCHEDULE

A. As a minimum, submit two bar charts as follows:

1. 60-Day Plan: Show major initial activities including, but not limited to, mobilization, permits, submittals and submittal review periods for early product procurement and long lead-time items, initial site work, and other activities anticipated in the first 60 Calendar Days after the Notice to Proceed.

2. Project Overview Plan: Show major components of the Work and the sequence relations between major components and subdivisions of major components. The chart shall indicate the relationship and time frames in which the various facilities will be made complete and placed into service. Sufficient detail shall be included for the identification of subdivisions of major components into such activities as:

   a. Material submittals and procurement
   b. 48-inch pipe trenching and installation
   c. Each trenchless channel crossing
   d. Each railroad crossing with trenchless methods or open cut
   e. Trenchless road crossing
   f. Manhole structures
   g. AVARVs
   h. Blow-offs
   i. Paving
   j. Flow Control valve vault
   k. Meter vault
   l. 12-inch pipe replacement
   m. 12-inch pipe trenching and installation
   n. Sewer relocation
   o. Paving
   p. Overlay
   q. Tie-ins to existing PVC piping and steel piping.
   r. Testing.
   s. Final pavement striping and marking

B. Planned durations and start dates shall be indicated for each work item subdivision. Each major component and subdivision component shall be accurately plotted on time scale sheets not to exceed 11 inches by 17 inches in size.

C. The preliminary progress schedule, when accepted by the Owner, will be the initially acceptable schedule.

1.05 PROGRESS SCHEDULE

A. General:

1. Schedule(s) shall reflect work logic sequences, restraints, delivery windows, review times, specified Fixed Calendar Dates for completion of portions of the Work, and the Time(s) for Completion set forth in the Contract Documents and shall begin with the date of Notice to Proceed and conclude with the date of the Contractor's submittal of his Certificate of Completion.

2. The schedule requirement herein is the minimum required. Contractor may prepare a more sophisticated schedule if such will aid Contractor in execution and timely completion of Work.

3. Prepare schedule based on the Contactor's selected work week.

4. Use Microsoft Project latest version or a compatible and approved software.

5. Adjust or confirm schedules on a monthly basis.

6. Float time is a project resource available to both parties to allow for completion of the Work or portions thereof within the Time(s) for Completion or by Fixed Calendar Dates, as applicable.

7. Use of float suppression techniques such as preferential sequencing or logic, special lead/lag logic restraints, and extended activity times are prohibited, and use of float time disclosed or implied by use of alternate float-suppression techniques shall be shared to proportionate benefit of Owner and Contractor.

8. Pursuant to above float-sharing requirement, no time extensions will be granted nor delay damages paid until a delay occurs which (i) impacts project's critical path, (ii) consumes available float or contingency time, and (iii) extends Work beyond the Time(s) for Completion.

B. Submittal of Schedules

1. Formatted schedule as described in 1.05.C shall be submitted to the Owner no later than the Pre-Construction Meeting. Subsequent schedules shall be submitted within the first five days of each month.

2. Provide 4 hardcopies of each submitted schedule and one digital copy on a Microsoft Windows XP platform compatible computer compact disc or via e-mail to the District's Project Manager.

3. Calleguas reserves the right to withhold payment of a monthly progress payment if a schedule update is not submitted with the Partial Estimate. If Calleguas does not

withhold payment in one month, it still reserves the right to do so in any subsequent month if a schedule is not submitted.

C. Format:

Schedules to be submitted shall follow the format described as follows unless a different format is approved by the Owner:

1. Bar Chart Schedule, on maximum 11-inch by 17-inch sheet size to include at least:

   a. Identification and listing in chronological order of those activities reasonably required to complete the Work, including, but not limited to, subcontract work, major equipment design, fabrication, factory testing, and delivery dates, including required lead times for Owner-furnished products, move-in and other preliminary activities, equipment and equipment system test and startup activities, project closeout and cleanup, and specified work sequences, constraints, and Time(s) for Completion and Fixed Calendar Dates. Listings to be identified by Specification section number.

   b. Identify (i) horizontal time frame by year, month, and week, (ii) duration, early-start, and completion for each activity and sub-activity, and (iii) critical activities and project float.

   c. Sub-schedules to further define critical portions of the Work.

   d. Show overall percent complete, projected and actual, and completion progress by listed activity and sub-activity.

1.06 CLAIMS FOR ADJUSTMENT OF CONTRACT TIME

A. Reference the General Conditions and Special Conditions.

B. Where Owner has not yet rendered formal decision on Contractor's claim for adjustment of the Time(s) for Completion and parties are unable to agree as to amount of adjustment to be reflected in progress schedule, Contractor shall reflect that amount of time adjustment in progress schedule as Owner may accept as appropriate for the interim. It is understood and agreed that such interim acceptance by Owner will not be binding and will be made only for purpose of continuing to schedule work until such time as formal decision as to an adjustment, if any, of the Time(s) for Completion acceptable to the Owner has been rendered. Contractor shall revise progress schedule prepared thereafter in accordance with Owner's formal decision.

PART 2 - PRODUCTS (NOT USED)

PART 3 - EXECUTION (NOT USED)

END OF SECTION

TECHNICAL PROVISIONS

SECTION 01510

TEMPORARY CONSTRUCTION FACILITIES

PART 1 - GENERAL

1.01 GENERAL REQUIREMENTS

A. It shall be the Contractor's responsibility to provide plant and equipment that is adequate for the performance of the Work under this Contract within the time specified. All plant and equipment shall be kept in satisfactory operating condition and shall be capable of safely and efficiently performing the required work, and shall be subject to inspection and approval by the Owner at any time within the duration of the Contract. All work hereunder shall conform to the applicable requirements of Cal-OSHA Construction Safety Orders. The Contractor shall make arrangements with the appropriate utility agencies for temporary connections to the utilities. The Contractor is responsible for extending any utility services to the required point of use.

B. Type of Facilities: The types of temporary facilities required for general use at the work site may include but are not limited to the following:

Water service
Sanitary facilities
Electric power service
Telephone service

C. Scheduled Uses: The Contractor shall schedule the implementation and termination of service for each temporary utility or facility.

PART 2 - PRODUCTS

2.01 MATERIALS

A. The Contractor shall provide either new or used materials and equipment, which are in substantially undamaged condition and without significant deterioration and which are recognized in the construction industry, by compliance with appropriate standards, as being suitable for intended use in each case.

PART 3 - EXECUTION

3.01 GENERAL

A. Wherever feasible, the Contractor shall engage the utility company to install temporary utility service to the project, or as a minimum, to make connection to existing utility service and shall locate services where they will not interfere with total project construction work, including installation of permanent utility services.

B. The Contractor shall maintain temporary services as installed for required period of use and shall relocate, modify or extend as necessary from time to time during that period as required to accommodate total project construction work.

C. The Contractor shall be responsible for all costs of installation, maintenance, removal and usage of any utility throughout the project.

D. All temporary utility installations shall meet, at minimum, all applicable state, local and trade codes.

3.02 ELECTRICAL POWER SERVICE

A. Power: The Contractor shall provide all necessary power required for its operations under the Contract, and shall provide and maintain all temporary power lines required to perform the work in a safe and satisfactory manner, at no additional cost to the Owner.

B. Construction Lighting: All work conducted at night or under conditions of deficient daylight shall be suitably lighted to insure proper work and to afford adequate facilities for inspection and safe working conditions. Lighting shall be shielded so that it does not glare into nearby residences.

3.03 WATER SUPPLY

A. Information regarding the availability of water service is provided in the Special Conditions.

B. General: The Contractor shall locate and provide an adequate supply of water of a quality suitable for all domestic and construction purposes. The Contractor shall provide and operate all pumping facilities, pipelines, backflow preventers, valves, hydrants, storage tanks, and all other equipment necessary for the adequate development and operation of the water supply system. Water used for domestic purposes shall be free of contamination and shall conform to the requirements of the State and local authorities for potable water. The Contractor shall be solely responsible for the adequate functioning of its water supply system and shall be solely liable for any claims arising from the use of same, including discharge or waste of water therefrom. The water supplier in the vicinity of the Site is the Camrosa Water District.

The Contractor shall, at no additional cost to the Owner, provide all facilities necessary to convey the water from the source to the points of use in accordance with the requirements of the Contract Documents. The Contractor shall pay all water permit fees and any fees for the water meter(s). All charges for water use shall be paid for by the Contractor.

C. Water Connections: The Contractor shall not make connection to, or draw water from, any fire hydrant or pipeline without first obtaining permission of the authority having jurisdiction over the use of said fire hydrant or pipeline and from the agency owning the affected water system. For each such connection made, the Contractor shall first attach to the fire hydrant or pipeline a tested and certified backflow prevention assembly and a meter, if required by the said authority, of a size and type acceptable to said authority or agency.

D. Potable Water: All drinking water on the site during construction shall be furnished by the Contractor and shall be bottled water or water furnished in approved dispensers. Notices shall be posted conspicuously throughout the site warning the Contractor's personnel that piped water may be contaminated.

3.04 INSTALLATION OF SANITARY FACILITIES

A. Toilet Facilities: Fixed or portable chemical toilets shall be provided wherever needed for the use of Contractor's employees and shall be available for the Owner’s use. Toilets at construction sites shall conform to the requirements of Section 1526 of the Cal/OSHA Construction Safety Orders.

B. Sanitary and Other Organic Wastes: The Contractor shall establish a regular weekly collection of all sanitary and organic wastes, and more frequently if required. All wastes and refuse from sanitary facilities provided by the Contractor or organic material wastes from any other source related to the Contractor's operations shall be disposed of away from the site in a manner satisfactory to the Owner and in accordance with all laws and regulations pertaining thereto.

3.05 INSTALLATION OF COMMUNICATIONS

A. Traffic Control Telephone Services: The Contractor shall provide and maintain at times required during the progress of the work, cellular telephone service for any flagperson(s) present and actively performing work on the construction site where flagging required traffic controls are installed. The Contractor shall physically verify that the cellular service selected by the Contractor will provide clear signal to the flagperson(s). Maintenance of sufficient battery charge and of spare charged batteries for the cellular telephone to be operational at all times during flagging operations, including 24 hour service over long periods of time, shall be the responsibility of the Contractor. All flagpersons who are responsible for communicating on the cellular telephone must speak clearly and have a good understanding of the English language. Refer to Section 13520 for additional requirements of traffic control and cellular telephone usage.

3.06 TEMPORARY VENTILATION

A. Ventilate enclosed areas to assist cure of materials, to dissipate humidity and to prevent accumulation of dust, fumes, vapors or gases.

3.07 FIELD OFFICE, EQUIPMENT, AND SERVICES

A. General Field Office Requirements: The Contractor shall provide a temporary field office, equipment, and services specified herein for the Owner at the Site during the entire time of construction beginning from mobilization and remaining until the date set forth in Paragraph C below. The Contractor may place the field office within the area shown on the Drawings or at an off-site location for which he has obtained the necessary permission. The Contractor may not place the field office within any of the roadways, public rights-of-way, or traffic control set ups.

B. The required field office, equipped as specified herein, shall be provided at the site of the Contractor's choice within the area shown on the Drawings or at a nearby location for which the Contractor has obtained permission from the property owner.

C. Said field office shall be maintained in full operation at the site with all utilities connected and operable until the Owner has released it in writing. Upon release of the field office by the Owner, the Contractor shall remove the field office within 5 Working Days from said date and shall restore the site occupied by said field office to the condition specified or shown in the Contract Documents for the subject area.

D. The Contractor shall furnish, install, and maintain all necessary electrical wiring, plumbing, toilet and lavatory fixtures, air conditioning and heating equipment, and shelving; and shall furnish all necessary light, heat, water, internet connection and daily janitorial services in connection with the field office specified herein for the duration of the Work; and shall remove said office and appurtenant facilities the same date the field office must be removed as set forth in Paragraph 3.07.C above.

E. Owner's Field Office: The Contractor shall provide and maintain for the exclusive use of the Engineer and/or the Owner's representative and personnel, in the area shown on the Drawings, one separate, well lighted, air conditioned and electrically heated field office. The Contractor shall provide all furnishings, services and equipment specified herein. The office shall be provided with an outside door lock. The area of said office shall not be less than 168 square feet. The office shall be located close to the Contractor's field office. Said office shall be of the portable trailer type unless otherwise specifically authorized by the Owner in writing and shall be a separate unit, not attached or connected to any other structures.

F. Field Office Furnishings: The Contractor shall provide the following listed items in good condition for the Owner's field office:

2 each - Standard 30 x 60-inch desk(s) with not less than 3 drawers.
1 each - Plan table 36 x 72-inch top; 36 inches high.

1 each - Plan rack (all metal plan-hold type) capable of holding 6 sets of plans, complete with 6 standard all metal plan-hold clamps.
1 each - File cabinet, legal size, 4-5 drawer with lock and 3 keys, double suspension, complete with Pendaflex suspension racks for each drawer.
3 each - Office chair(s) standard armrest type, adjustable, swivel, tilt-back with casters.
2 each - Office chair(s), stiff-leg type, no armrest.
1 each - Drafting stool.
2 each - Waste basket(s).
1 each - Tack board 36 x 42 inches.
20 LF - Bookshelves.
1 each - Bottled water dispense unit (supplying both hot and cold water) and bottled water service and continuous supply of paper cups.

G. Copy Machine: The Contractor shall provide, for the exclusive use of the Owner, one dry-type, electrostatic office copy machine for installation in the Owner's field office. Said copy machine shall be a dry, electrostatic process, capable of reproducing originals sized 8 1/2 x 11, 8 1/2 x 14 and 11 x 17. The copy machine shall be capable of making both full-sized and reduced copies.

H. Internet Service: The Contractor shall establish, for the exclusive use of the Owner, high speed broadband internet connection and service in the Owner's field office for the duration of the project. The internet service shall be Asymmetric Digital Subscriber Line (ADSL) or cable modem with minimum speed of 384 kbps.

3.08 OPERATIONS AND TERMINATIONS

A. Termination and Removal: When need for a temporary facility or a substantial portion thereof has ended or when its service has been replaced by use of permanent services, the Contractor shall promptly remove installation unless requested by Owner to retain it for a longer period. When not in use, storage of temporary facilities within the public right-of-way shall not be allowed. The Contractor shall complete and restore work which may have been delayed or affected by installation and use of temporary utilities, including repairs to construction and grades and restoration and cleaning of exposed surfaces.

B. Removal of Water Connections: Before final acceptance of the Work on the project, all temporary facilities, connections and piping installed by the Contractor shall be entirely removed, and all affected improvements shall be restored to their original condition or better to the satisfaction of the Owner and to the agency owning the affected utility.

END OF SECTION

This page intentionally left blank.

TECHNICAL PROVISIONS

SECTION 02140

DEWATERING AND DRAINAGE

PART 1- GENERAL

1.01 SCOPE OF WORK

A. Design, furnish, install, operate, monitor, maintain and remove a temporary dewatering system as required to lower and control water levels below subgrades of excavations to permit construction in the dry.

B. Furnish, install, maintain and remove temporary surface water control measures adequate to drain and remove groundwater and surface water entering excavations in accordance with Section 02970.

C. Discharge water must be disposed for treatment in a lawful manner or put to beneficial use. See Paragraph 3.03.N.

1.02 CONTRACTOR DESIGN AND RESPONSIBILITY

A. Contractor is responsible for:

1. Design and execution of methods for controlling surface water and groundwater.

2. Collection and transportation of water removed from excavations and beneficial use of such water for dust control or irrigation or legal disposal.

3. Damage to properties, buildings or structures, sewers and other utility installations, pavements.

4. Work that may result from dewatering or surface water control operations.

B. Design review and field monitoring activities by the Owner or by the Engineer shall not relieve the Contractor of his/her responsibilities for the Work.

1.03 SUBMITTALS

A. Submit to the Engineer, in accordance with Section 01300, detailed plans of the proposed dewatering method, as specified in Paragraph 3.03 below.

B. Submit to the Engineer and the agency having jurisdiction, the proposed method of abandoning dewatering wells.

C. Submit to the Owner the proposed use or disposal and location for use of water generated from excavation dewatering activity.

1.04 DEFINITIONS

A. Where the phrase "in-the-dry" is used in this Section, it shall be defined to mean a soil condition such that the in-place moisture content of the soil at that time is no more than two percentage points above the optimum moisture content of that soil as determined by the laboratory test of the moisture-density relation appropriate to the specified level of compaction.

1.05 FINES

A. The Contractor shall bear the costs of any fines levied against the Contractor or the Owner for failure to comply with applicable laws, regulations, provisions and requirements during or as a result of construction under this Contract due to the Contractor's negligent acts.

1. The Owner will retain from the Contractor's Progress Payment, monies necessary to pay such fines levied against the Owner plus 25 percent of such fines for potential costs of coordination and administration efforts, and acquiring technical and legal advice.

PART 2 - PRODUCTS

2.01 MATERIALS

A. Pipe for observation wells, if required, shall consist of minimum 1-inch ID, Schedule 80 PVC pipe and machine slotted PVC well points, maximum slot size 0.020-inches.

B. Desilting tank(s) of appropriate size shall be provided, if required, to handle and hold surface and groundwater prior to disposal or beneficial use.

C. Geotextile filter fabric shall be non-woven polypropylene such as Propex Geotex 601, TenCate Mirafi N-Series 160N, and Thrace-Linq 150EX or approved equivalent.

PART 3 - EXECUTION

3.01 GENERAL

A. Control surface water and groundwater such that excavation to final grade is made in-the-dry, the bearing soils are maintained undisturbed, and softening and/or instability or disturbance due to the presence or seepage of water does not occur. All construction and backfilling shall proceed in-the-dry, and flotation of completed portions of work shall be prohibited.

3.02 SURFACE WATER CONTROL

A. Construct surface water control measures, including dikes, ditches, sumps and other methods to prevent flow of surface water into excavations.

3.03 EXCAVATION DEWATERING

A. At all times during construction, furnish and maintain proper equipment and facilities to promptly remove and dispose of properly all water within or entering excavations. Excavations shall be kept dry, so as to obtain a satisfactory undisturbed subgrade foundation condition until the fill, structure or pipes to be built thereon have been completed to such an extent that they will not be floated or otherwise damaged by allowing water levels to return to natural elevations.

B. Excavation and dewatering shall be accomplished by methods which preserve the undisturbed state of subgrade soils. Excavations may be made by machinery to, or just below, the designated subgrade, provided that material remaining in the bottom of the trench is no more than slightly disturbed. Subgrade soils which become soft, loose, "quick," or otherwise unsatisfactory as a result of inadequate excavation, dewatering or other construction methods shall be removed and replaced by crushed rock wrapped in non-woven polypropylene geotextile filter fabric material as required by the Owner at the Contractor's expense.

C. Clay and organic silt soils are particularly susceptible to disturbance due to construction operations. When excavation is to end in such soils, use care during the excavation of the last 1 foot of depth.

D. All trenches and excavations shall be dewatered prior to excavation to maintain a water level at least six (6) inches below the bottom of anticipated excavation.

E. All excavations shall be maintained in-the-dry during the course of the Work and be maintained at all times. Water level will not be allowed to rise in the excavation area at any time until backfill is completed and as additionally required in this Section.

F. Dewatering pipes, desilting tank(s), monitoring wells and other associated dewatering equipment shall be within the road right-of-way, as approved by the agency having

jurisdiction or Owner acquired easements. No equipment shall be constructed in private right-of-way without written permission from the owner of the property. Permission to place dewatering equipment within property which is not specifically public road right-of-way will require the Contractor to obtain written permission or temporary easement from the owner of the property. No Extra Work will be due the Contractor for obtaining additional construction area(s).

G. Pipe and concrete shall not be laid in water or submerged. Water shall not flow over new concrete structures within 3 Calendar Days after placement.

H. Dewater and excavate, at all times, in a manner which does not cause loss of ground or disturbance to the pipe bearing soil or soil which supports overlying or adjacent structures. Dewatering operations shall continue through work times and non-work times if open excavation will become flooded without dewatering operations.

I. Prevent flotation of pipe by promptly placing backfill.

J. Dewatering shall at all times be conducted in such a manner as to preserve the natural undisturbed capacity of the subgrade soils at proposed bottom of excavation. If the subgrade of the trench bottom or excavation becomes disturbed due to inadequate drainage, excavate below normal grade as directed by the Owner and refill with crushed rock at the Contractor's expense.

K. Evaluate the impact of the anticipated subsurface soil/water conditions on the proposed method of excavation and removal of water.

L. Where groundwater level is above the proposed bottom of excavation level, it is expected that some type of pumped dewatering system will be required for pre-drainage of the soils prior to final excavation and for maintaining the lowered groundwater level until construction has been completed to such an extent that the structure, pipeline or fill will not be floated or otherwise damaged. It is further expected that the type of system, spacing of dewatering units and other details of the Work will have to be varied depending on soil/water conditions at a particular location.

M. At least 2 weeks prior to the start of construction in any areas of anticipated dewatering, submit to the Engineer for review, a proposed initial plan for removal of water, method of excavation and support of the excavation. Do not proceed with construction in any of these areas until the initial plan has been reviewed and commented upon by the Engineer. It is expected that the initial plan may have to be modified to suit the variable soil/water conditions to be encountered. Dewater and excavate, at all times, in a manner which does not cause loss of ground or disturbance to the pipe or appurtenance bearing soil or soil which supports overlying or adjacent structures.

N. If the method of dewatering does not properly dewater the trench as specified, installation of groundwater observation wells may be required as directed by the Engineer. Do not place any pipe or structure until the readings obtained from the

observation wells indicate that the groundwater has been lowered a minimum of 6 inches below the bottom of the final excavation within the trench limits.

O. Dewatering Wells and Piping

1. Dewatering units used in the Work shall be surrounded by suitable filter sand and no fines shall be removed by pumping. Pumping from the dewatering system shall be continuous until water is allowed over the work in accordance with this Section. Stand-by pumps shall be provided.

2. Adequate dewatering wells, piping, and appurtenances shall be installed, and operational as required in this Section for anticipated construction prior to setup of pipe installation traffic controls shown on the Drawings.

3. Where dewatering wells, piping, or appurtenances are installed within the traveled way, all piping, wiring, and appurtenances shall be completely buried and repaved flush to adjacent finished ground. Following installation of dewatering wells, piping, or appurtenances, traffic shall be returned to normal.

P. Water entering the excavation from precipitation or surface runoff shall be collected and discharged in a lawful and approved manner. See Section 02970.

Q. Handling and Discharge of Water Derived from Dewatering:

1. No Regional Board dewatering permit has been obtained for this project. Therefore, no water removed from excavations shall be discharged from the Site. Water from trench or excavation dewatering may be used for dust control or irrigation at the Site, at another location for which the Contractor has written approval from the property owner for such activity, or in accordance with Special Conditions Section 1-37.

2. Handling and beneficial use of water or lawful disposal of water derived from dewatering shall be the responsibility of the Contractor.

3. The Contractor shall acquire necessary permits from all governing agencies and any required temporary easements for the disposal of water, if necessary. The Contractor shall perform any excavation, paving and traffic control necessary to install and remove facilities for the transportation and disposal of water.

4. Water may be used for beneficial use for dust control or irrigation. Before doing so, the Contractor must demonstrate to the Owner that he has written agreements with property owner(s) for use of their property for such purposes.

END OF SECTION

TECHNICAL PROVISIONS

SECTION 02150

CLEARING AND GRUBBING

PART 1 - GENERAL

1.01 SCOPE OF WORK

A. Furnish all labor, materials and equipment required and perform all site and right-of-way clearing and grubbing, complete as specified in the Contract Documents.

B. Obtain all permits required for site preparation work prior to proceeding with the Work, including clearing and tree removal.

C. The areas to be cleared, grubbed and stripped shall be minimized to the extent possible for the scope of work and in consideration of the actual means and methods of construction used. No unnecessary site preparation within these areas shall be performed.

1.02 RELATED WORK

A. Earthwork is included in Section 02200.

B. Environmental Protection is included in Section 02960.

C. Miscellaneous Work and Cleanup are included in Section 02990.

1.03 SUBMITTALS

A. Submit to the Engineer, in accordance with Section 01300, copies of all permits required prior to clearing, grubbing, and stripping work.

PART 2 - PRODUCTS (NOT USED)

PART 3 - EXECUTION

3.01 CLEARING

A. Where the removal of trees, shrubs or any vegetation is indicated or specified to be removed, in whole or in part, the Contractor shall accomplish such removal and subsequent disposal at his sole expense under the Contract and no extra payment will be made therefor. Where roots of trees are severed sufficiently in the opinion of the Owner,

to create a hazardous condition, such trees shall be removed and disposed of by the Contractor at no additional cost. Cut and remove all trees, stumps, brush, shrubs, roots, grass, weeds, rubbish and any other objectionable material resting on or protruding through the surface of the ground.

B. Within trench limits and footprints of facilities to be constructed, all vegetation, including trees and shrubs, shall be removed; however, the extension of limits beyond that specified or indicated, owing to the Contractor's error, or for reasons of his convenience, or for any other reason, shall not be just cause for removal or damage to any trees, shrubs, etc.

C. Within public rights-of-way, the Contractor shall protect all trees, shrubs, and other vegetation except as indicated or specified otherwise. Preserve and protect trees and other vegetation directed by the Owner to remain as specified below.

D. The Contractor shall be liable for all damages and costs on account of any unauthorized removal of trees and other vegetation in connection with his operations and for damage to any such vegetation left standing, except for such cutting of roots as is absolutely necessary in order to complete the work in accordance with these specifications.

E. Agricultural windrow trees shall not be damaged or removed unless shown on the Drawings. All windrows shall be protected in place and pruned in accordance with Paragraph 3.05.C only when necessary for construction.

F. Preserve and protect irrigation systems encountered in construction of the Work. Promptly reconstruct and restore to service irrigation systems removed or damaged in the performance of the work.

3.02 GRUBBING

A. Grub and remove all stumps, roots in excess of 1-1/2 inches in diameter, matted roots, brush, timber, logs, concrete rubble and other debris encountered to a depth of 18 inches below original grade or 18 inches beneath the bottom of foundations, whichever is deeper.

B. Refill all grubbing holes and depressions excavated below the original ground surface with suitable materials and compact to a density conforming to the surrounding ground surface in accordance with Section 02200.

3.03 STRIPPING

A. Strip topsoil from all areas to be occupied by structures and roadways and all areas to be excavated or filled.

B. Topsoil shall be free from brush, trash, large stones and other extraneous material. Avoid mixing topsoil with subsoil.

C. Stockpile and protect topsoil until it is used in right-of-way restoration operations. Dispose of surplus topsoil after all work is completed in accordance with applicable regulations.

3.04 DISPOSAL

A. Dispose of material and debris from site preparation operations by hauling such materials and debris to an approved offsite disposal area. No rubbish or debris of any kind shall be buried on the site.

B. Burning of cleared and grubbed materials or other fires for any reason will not be permitted.

C. All waste and surplus excavated materials become the property of the Contractor and must be disposed of off-site in a lawful manner. The Owner reserves the right, at his discretion, to take ownership and possession of samples of excavated materials.

3.05 PROTECTION

A. Trees and other vegetation designated on the Drawings or directed by the Owner to remain shall be protected from damage by all construction operations by erecting suitable barriers, guards and enclosures, or by other approved means. Conduct clearing operations in a manner to prevent damage to trees and vegetation designated to remain and to the Work being constructed and so as to provide for the safety of employees and others.

B. All vegetation outside the Work area limits, including trees and shrubs, shall be protected in place unless removal or modification of such is allowed in writing by both the Owner and the agency having jurisdiction or the property owner.

C. Pruning: Trees not removed shall be protected in place. Tree branches interfering with construction operations shall be neatly cut off to the boles in a workmanlike manner, as necessary. The Contractor shall remove additional tree branches under the direction of the Owner or agency having jurisdiction, in such a manner that the tree will present a balanced appearance. Cuts over 1 inch in diameter shall be immediately treated with an acceptable tree wound paint.

D. Maintain protection of trees and other vegetation until all work in the vicinity of the trees and other vegetation being protected has been completed.

E. Do not operate heavy equipment or stockpile materials within the branch spread of existing trees.

F. Immediately repair any damage to existing tree crowns, trunks, or root systems. Roots exposed and/or damaged during the Work shall immediately be cut off cleanly inside the exposed or damaged area. Treat cut surfaces with an acceptable tree wound paint and topsoil spread over the exposed root area.

G. When work is completed, remove all dead and downed trees. Live trees shall be trimmed of all dead and diseased limbs and branches. All cuts shall be cleanly made at their juncture with the trunk or preceding branch without injury to the trunk or remaining branches. Cuts over 1 inch in diameter shall be treated with an acceptable tree wound paint.

H. Restrict construction activities to those areas within public rights-of-way. Adjacent properties and improvements thereon, public or private, which become damaged by construction operations, shall be promptly restored to their original condition, to the full satisfaction of the property owner at no additional cost to the Owner.

END OF SECTION

TECHNICAL PROVISIONS

SECTION 02200

EARTHWORK

PART 1 - GENERAL

1.01 SCOPE OF WORK

A. It shall be the responsibility of the Contractor to allow for, excavate, segregate, and place in acceptable locations any unsuitable material encountered. The Contractor shall replace any unsuitable material with suitable compacted select fill per the Contract Documents. All unsuitable material removal, relocation, and/or disposal for construction purposes shall be the responsibility of the Contractor and shall be paid in accordance with the appropriate bid items.

B. The Contractor shall furnish all labor, materials, equipment and incidentals required and perform all excavation work and grading; place and compact backfill and fill; and dispose of waste and surplus materials as specified in the Contract Documents.

C. The Contractor shall provide the services of a licensed land surveyor registered in the State of California to provide all required survey adequate to properly construct all facilities.

D. The Contractor shall furnish and install all imported select fill and select granular materials required to finish earthwork at no additional cost to the Owner.

E. Wherever the requirement for a specified percent compaction of soil material is referred to herein or on Drawings it shall mean "at least the specified percent of maximum density as determined by ASTM D1557."

F. Whenever the requirement for a specified percent compaction of soil-cement is referred to herein or on Drawings it shall mean “at least the specified percent of maximum density as determined by ASTM D558.”

1.02 RELATED WORK

A. Dewatering and Drainage are included in Section 02140.

B. Clearing and Grubbing are included in Section 02150.

C. Trenching, Backfilling and Compaction are included in Section 02220.

D. Granular and Rock Materials are included in Section 02230.

E. Sheeting, Shoring, and Bracing are included in Section 02400.

F. Environmental Protection is included in Section 02960.

G. Miscellaneous Work and Cleanup are included in Section 02990.

H. Cast-in-Place Concrete is included in Section 03300.

1.03 SUBMITTALS

A. Submit to the Engineer in conformance with Section 01300:

1. Test reports of imported material. Samples shall be submitted in accordance with SSPWC, Subsection 306-1.3.7.

2. Such other samples of materials as the Engineer may require.

3. Furnish detailed drawings showing means of safe and stable excavations.

4. The proposed methods of construction, including excavation, excavation support systems designs, backfilling and filling and compaction, for the various portions of the Work.

5. Utility Potholing Report.

B. Submit to the Owner prior to the start of any excavation work:

1. Copy of the excavation permit issued by the California Department of Industrial Relations.

1.04 REFERENCE STANDARDS

A. American Society for Testing and Materials (ASTM)

1. ASTM D558 - Standard Test Methods for Moisture-Density (Unit Weight) Relations of Soil-Cement Mixtures

2. ASTM D1557 - Test Methods for Laboratory Compaction Characteristics of Soil Using Modified Effort

1.05 QUALITY ASSURANCE

A. Prior to and during the placement of backfill and fill of materials other than cement-sand slurry and soil-cement slurry, or concrete, coordinate with the Owner or Owner's Materials Inspector to perform in-place soil density tests or to verify that the backfill/fill material has been compacted in accordance with the compaction

requirements specified elsewhere. The Owner or Engineer may designate areas to be tested.

B. From time to time and at such time as deemed necessary during backfill operations, the Owner may make or cause to be made, tests of the backfill material to determine whether such compaction and/or compressive strength meets the minimum requirements specified for the various portions of the Work.

C. The Owner will bear all costs for initial compaction and material testing at the selected locations; however, in areas where results of initial testing indicate the need for additional compaction, removal and recompaction or removal and replacement, of backfill material, the Contractor shall bear the costs of retesting.

D. In every case, the quantity and location of specific points at which tests are to be made shall be selected by the Owner. The Contractor shall cooperate with and assist the Owner, as necessary, to perform the soils tests or taking of samples. When selected points for testing occur below the backfill surface, the Contractor shall excavate all materials in the area to such point and shall replace same following completion of testing. All cost of such excavations and replacements shall be borne by the Contractor as a part of his obligation under the Contract.

E. The Contractor shall remove material as required in any areas where compaction and/or compressive strength of the material when tested do not fully comply with these Specifications. The unsatisfactory material shall be promptly removed, after notification, and replaced with material that will conform to the specified requirements. Any additional costs for such required removal and recompaction or replacement of material shall be borne by the Contractor.

1.06 DEFINITIONS

A. Where the phrase "in-the-dry" is used in this Section, it shall be defined to mean a soil condition such that the in-place moisture content of the soil at that time is no more than two percentage points above the optimum moisture content of that soil as determined by the laboratory test of the moisture-density relation appropriate to the specified level of compaction.

B. Where used in this Section, "structures" refers to all buildings, wet wells, manholes, reservoirs and below-grade vaults. Stormwater structures smaller than 27 cubic feet in volume and duct banks are not considered structures in this context.

C. Where used in this Section, “structural fill” or “structural backfill” refers to select fill materials placed for, under or against buried structures as defined in Section 02230.

D. Where used in this Section, “compressive strength” in relation to backfill material, it refers to the tested compressive strength of cementitious backfill materials such as soil-cement, cement-soil slurry, and cement-sand slurry.

PART 2 - PRODUCTS

2.01 GENERAL

A. Materials designated for use in this Section are specified in Section 02230, excepting that materials to be used for trench construction are specified in Section 02220.

B. Timber used for excavation support systems shall be pressure treated with wood preservative for ground contact.

PART 3 - EXECUTION

3.01 PREPARATION

A. The Contractor shall perform investigations, including exploratory excavations, to determine and confirm the location and type of existing utilities, service laterals and appurtenances in accordance with General Conditions Section 5.25. The Contractor shall perform such investigations sufficiently in advance of the submittal of Shop Drawings. If the Contractor discovers utility facilities not identified on the Drawings or in a position different from that shown in the Contract Documents, the Contractor shall immediately notify the Owner in writing.

B. Exploratory Excavations

1. Perform exploratory excavation work (pothole) for the purpose of verifying the location of underground utilities and structures prior to commencing excavation work.

2. Record location and elevation of existing utilities investigations on project record drawing as well as including such information in the Pothole Report, as specified in the General Conditions.

3. Pothole excavations shall be backfilled as soon as the desired information has been obtained. Backfilled surfaces shall be stabilized in accordance with encroachment permit requirements and these Specifications, as applicable.

4. Unless required otherwise by the agency having jurisdiction, pothole excavations shall be backfilled with 1 sack cement-sand slurry. Surface treatment shall be A.C. pavement in accordance with Section 02512 for paved areas.

C. Any necessary temporary dewatering and drainage systems shall be in place and operational prior to beginning excavation work in accordance with Section 02140.

3.02 STRUCTURAL EXCAVATION PROCEDURES

A. Excavations for structures shall be suitably wide for construction of the structures, including excavation supports, dewatering and drainage systems and working clearances.

B. Excavation for structures shall be carried to lines and grades required to properly accommodate construction of such structures to the dimensions shown on the Drawings or as directed.

C. Excavation shall be performed in-the-dry and shall be accomplished by methods which preserve the undisturbed state of subgrade soils. Any necessary drainage and dewatering systems shall be in place and operational prior to beginning excavation work. In no case shall the earth be plowed, scraped or excavated by any means so near to the finished subgrade that would disturb the finished subgrade. Hand excavation of the final 3 to 6 inches may be required to obtain a satisfactory, undisturbed subgrade. Subgrade soils which become soft, loose, "quick", or otherwise unsatisfactory for support of structures as a result of inadequate excavation, dewatering, or other construction methods shall be removed and replaced with 2 sack cement-sand slurry, cement-soil slurry, or soil-cement, structural backfill compacted to a minimum 95 percent modified proctor (ASTM D1557), or suitable crushed rock wrapped in geotextile filter fabric, subject to prior approval by the Owner and at no additional cost to the Owner.

D. Subgrade Preparation

1. All structures unless otherwise specified in the Contract Documents:

   a. Compact the top 12 inches of subgrade to a minimum of 95 percent modified proctor (ASTM D1557).

   b. Install 8-inch thick crushed rock wrapped in geotextile filter fabric under and 12 inches beyond all sides.

E. When excavations have reached the required subgrade, including any allowances for working mats or base materials, prior to the placement of working mats or base materials, notify the Owner for soils testing. If the material at the level of excavation bottom consists of unsuitable soft earth as determined by the Owner, the subgrade material shall be removed to the extent directed and the excavation refilled with crushed rock wrapped in geotextile material in addition to that required in Paragraph 3.02.E.1.b of this Section.

3.03 GENERAL FILLING AND BACKFILLING PROCEDURES

A. Fill and backfill materials shall be placed in lifts not exceeding 8 inches (measured before compaction) when using non-hand operated equipment for compaction to suit the specified compaction requirements to the lines and grades required, making

allowances for settlement and placement of cover materials (e.g., topsoil, sod). Soft spots or uncompacted areas shall be corrected.

B. Compaction in open areas may be accomplished by any of the following methods: compaction equipment, tracked dozers weighing at least 30,000 lbs. and operated at speeds sufficient to achieve specified compaction, or heavy vibratory rollers. Compaction in confined areas (including areas within a 45 degree angle extending upward and outward from the base of a wall) and in areas where the use of large equipment is impractical, shall be accomplished by hand operated vibratory equipment or mechanical tampers. Lift thickness shall not exceed 6 inches (measured before compaction) when hand operated equipment is used.

C. Fill and backfill shall not be placed and compacted when the materials are too wet to properly compact (i.e., when the in-place moisture content of the soil is more than two percentage points above the optimum moisture content as determined by a laboratory test for the specified level of compaction). Wet soils shall be dried and brought to in-the-dry condition prior to placing fill or backfill. The Contractor may furnish and place imported granular material, at his/her discretion, after approval by the Owner and at no additional cost to the Owner.

3.04 FILL AND BACKFILL PROCEDURES

A. Fill and backfill material placed immediately adjacent to and within 10 feet of all structures shall be select granular material unless otherwise shown on the Drawings. All structure water-tightness tests and waterproofing shall be completed prior to placing fill or backfill around structures. Place and compact select granular material in even lifts of 8 inches (loose thickness) uniformly around the structure.

B. Subbase fill required beneath building slabs, manholes, and other structures as specified or shown on the Drawings or fill under slabs on grade (except sidewalks) shall be structural base material fill. Place and compact structural base material fill in even lifts of 8 inches (loose thickness).

3.05 COMPACTION REQUIREMENTS

A. The minimum requirements for compaction shall be as shown on Drawings and as shown below herein, whichever is more stringent.

B. Ten feet around structures: Compact the top 12 inches of existing subgrade and each layer of fill or backfill to a minimum of 95 percent modified proctor (ASTM D1557) at or near its optimum moisture content (0 to 2 percent).

C. Beneath building slabs and slabs on grade (except sidewalks): Compact the top 12 inches or as shown on Drawings of subgrade (and each layer of fill if applicable) to a minimum of 95 percent modified proctor (ASTM D1557) at or near its optimum moisture content (0 to plus 2 percent).

D. Roads, paved areas and roadway shoulders: Backfill with cement-sand slurry, cement-soil slurry, or soil-cement to subgrade as specified in Sections 02250, 02260, and 02270, respectively, unless otherwise specified.

E. Unpaved areas: Backfill with select granular material or common fill as specified in Section 02230, unless otherwise specified.

3.06 DISPOSAL OF UNSUITABLE, WASTE AND/OR SURPLUS EXCAVATED MATERIAL

A. All waste and excess excavated materials become the property of the Contractor and must be disposed of off site in a lawful manner. The Owner, at his discretion, reserves the right to take ownership and possession of samples of excavated materials.

B. Materials may be temporarily stockpiled in an area within the limits of construction within public right-of-way by permission of the agency having jurisdiction, provided that it does not disrupt construction activities, create any nuisances or safety hazards, cause damage to existing facilities, or otherwise restrict access to the Site of the Work. Materials may not be stockpiled within 10 feet of centerline of existing buried pipelines.

3.07 GRADING

A. Grading shall be performed to the lines and grades shown on the Drawings. All objectionable material encountered within the limits indicated shall be removed and disposed of. Subgrades shall be completely and continuously drained and dewatered throughout the grading process. Install temporary drains, drainage ditches, etc, to intercept or divert surface water which may affect the execution or condition of grading work.

B. If at the time of grading it is not possible to place any material in its proper section of the Work, it shall be stockpiled in approved areas for later use. No extra payment will be made for the stockpiling or double handling of excavated material.

C. In cut areas, all loose or protruding rocks in slopes shall be removed to line or finished grade of the slope. All cut and fill slopes shall be uniformly dressed to the slope, cross-section and alignment shown on the Drawings unless otherwise directed by the Owner.

END OF SECTION

This page intentionally left blank.

TECHNICAL PROVISIONS

SECTION 02220

TRENCHING, BACKFILLING AND COMPACTION

PART 1 - GENERAL

1.01 SCOPE OF WORK

A. Furnish all labor, materials, equipment and incidentals required and perform all trenching for pipelines and appurtenances, including drainage, filling, backfilling, disposal of surplus material and restoration of trench surfaces and easements.

B. Excavation shall extend to the width and depth specified in the Contract Documents and shall provide suitable room for installing pipe, structures and appurtenances.

C. Excavation shall be as specified in Section 02200 except as modified in this Section.

D. The bottom of the excavation shall be firm, dry and in all respects, acceptable. Deposit geotextile-wrapped crushed rock for pipe bedding directly on the bottom of the trench immediately after excavation has reached the proper depth and before the bottom of the trench has become softened or disturbed by any cause whatever. All excavation except as specifically shown on the Drawings shall be made in open trenches.

E. Wherever the requirement for a specified percent compaction of soil material is referred to herein it shall mean "at least the specified percent of maximum density as determined by ASTM D1557."

F. Wherever the requirement for a specified percent compaction of soil-cement is referred to herein it shall mean “at least the specified percent of maximum density as determined by ASTM D558.”

1.02 RELATED WORK

A. Dewatering and Drainage are included in Section 02140.

B. Clearing and Grubbing are included in Section 02150.

C. Earthwork is included in Section 02200.

D. Granular fill materials are included in Section 02230.

E. Cement-Sand Slurry is included in Section 02250.

F. Cement-Soil Slurry is included in Section 02260

G. Soil-Cement is included in Section 02270.

H. Sheeting, Shoring and Bracing are included in Section 02400.

I. Temporary Pavement is included in Section 02510.

J. Asphalt Concrete Pavement and Base are included in Section 02512.

K. Steel Pipe and Fittings are included in Section 02620.

L. HDPE Pipe and Fittings are included in Section 02623.

M. Small Diameter PVC Pipe and Fittings are included in Section 02625.

N. Miscellaneous Work and Cleanup are included in Section 02990.

O. Cast-in-Place Concrete is included in Section 03300.

1.03 SUBMITTALS

A. Submit to the Engineer, in accordance with Section 01300, the following:

1. Required excavation submittals in accordance with Section 02200.

2. Data for bedding and backfill materials, including sources of materials, gradation, testing data and backfilling and compaction method.

3. Test report(s) for Type V Portland Cement showing chemical analysis and physical properties.

4. Manufacturer's or fabrication information on the toothless bucket to be used for trench excavations within the extents shown on the Drawings.

5. Prior to the start of work, submit the proposed method of backfilling and compaction to the Engineer for review.

1.04 REFERENCE STANDARDS

A. American Society for Testing and Materials (ASTM)

1. ASTM C150 – Standard Specification for Portland Cement

2. ASTM D558 – Standard Test Methods for Moisture Density (Unit Weight) Relations of Soil-Cement Mixtures

3. ASTM D1557 – Test Methods for Laboratory Compaction Characteristics of Soil Using Modified Effort

PART 2 - PRODUCTS

2.01 MATERIALS

A. Crushed rock shall be as specified in Section 02230.

B. Sand shall be as specified in Section 02230.

C. Select granular material shall be as specified in Section 02230.

D. Geotextile filter fabric shall be a non-woven polypropylene geotextile filter fabric material such as Propex Geotex 601, TenCate Mirafi N-Series 160N, and Thrace-Linq 150EX or an approved equivalent

E. Cement-sand slurry shall be as specified in Section 02250.

F. Cement-soil slurry shall be as specified in Section 02260.

G. Soil-cement shall be as specified in Section 02270.

2.02 TRENCH SECTION MATERIALS

A. General: Contractor shall use the trench section as shown on the Drawings and as specified herein.

B. Lower Bedding Zone Materials:

1. Lower Bedding Zone material shall be placed only as directed by the Owner. Lower bedding material shall be uniformly graded crushed rock wrapped in geotextile filter fabric. Thickness of crushed rock layer wrapped in geotextile fabric shall be 8 inches unless otherwise shown on the Drawings or as indicated in Paragraph 3.03 of this Section.

2. If trench excavation is below required grade, additional voids shall be filled by extending the geotextile wrapped crushed rock at no additional cost to Owner.

C. Bedding Zone Materials: Bedding Zone materials shall be sand. Minimum thickness of sand layer below pipe bottom shall be 6 inches, unless otherwise shown on Drawings.

D. Pipe zone materials shall be sand.

E. Trench Backfill Zone Materials – Paved Areas: Trench backfill zone material shall be cement-sand slurry, cement-soil slurry, soil-cement, and aggregate base. For paved areas, cement-sand slurry, cement-soil slurry, or soil-cement shall extend up to the bottom of the asphalt pavement.

F. Trench Backfill Zone Materials – Unpaved Areas within Public Right-of-Way: Trench backfill zone material shall be cement-sand slurry, cement-soil slurry, or soil-cement. Cement-sand slurry, cement-soil slurry, or soil-cement shall be extended up to 3 feet below the existing ground surface. Remaining backfill to finished grade shall be select granular material unless within grassed or landscaped area where the uppermost 1 foot to finished grade shall be topsoil stockpiled from the excavation. Topsoil may also be imported from a licensed nursery, as approved by the property owner.

G. Trench Backfill Zone Materials – Agricultural Areas: Trench backfill zone material shall be select or imported granular to 1 foot below finished grade. The uppermost 1 foot to finished grade shall be topsoil stockpiled from the excavation. Topsoil may also be imported from a licensed nursery, as approved by the property owner.

PART 3 - EXECUTION

3.01 TRENCH EXCAVATION

A. Trench excavation shall include excavating material of every description and of whatever substance encountered. Asphalt and concrete pavement, if existing, shall be cut with a saw, wheel or pneumatic chisel along straight lines before excavating.

B. Strip and stockpile topsoil from grassed or unfinished ground areas crossed by trenches. At the Contractor's option, topsoil may be otherwise disposed of and replaced, when required, with approved topsoil of equal quality.

C. While excavating and backfilling is in progress, traffic shall be maintained, and all utilities and other property protected.

D. Trenches shall be excavated to the depth indicated in the Contract Documents and in widths sufficient for laying the pipe, bracing and for pumping and drainage facilities. The bottom of the excavations shall be firm and dry and in all respects acceptable to the Owner. Trench width shall be within the limits indicated.

E. Dewatering shall be performed such that the water table shall be maintained to at least 6 inches below the bottom of the trench at all times during construction and in accordance with Section 02140. Water shall not be allowed to rise into the trench at any time.

F. Clay and organic silt soils are particularly susceptible to disturbance due to construction operations. When excavation is to end in such soils, use care during the excavation of the last 1 foot of depth.

G. Where the trench bottom is to be crushed rock or sand bedding, the trench may be excavated by machinery to the required depth provided that the material remaining in the bottom of the trench is no more than slightly disturbed.

H. Setting up of temporary traffic controls for trench excavation shall not begin until all installation materials required to complete the trenching and material installation work associated with that traffic control set up has been delivered to the field or is at the Contractor's yard. This includes, but is not limited to, pipe, pipe fittings, pipe couplings, pipe coatings, pipe linings, precast concrete structures, etc. Bulk materials such as cement-sand slurry, concrete, sand, etc. shall be confirmed available for the time when the Contractor will need such materials. Work for installation of dewatering wells required prior to trench excavation shall be performed prior to installation of temporary traffic controls for trench excavation and in accordance with Section 02140, Paragraph 3.03.O.

3.02 STORAGE AND DISPOSAL OF MATERIALS

A. Excavated material shall be stacked without excessive surcharge on the trench bank, shoring and existing underground and above ground facilities. It shall also not be stacked on any existing improved landscaping.

B. Excavated material shall be stacked without obstructing free access to hydrants and associated valves.

C. Should conditions make it impracticable or unsafe to stockpile material adjacent to the trench, the material shall be hauled and stored at a location to be approved by the Owner. When required, it shall be re-handled and used in backfilling the trench. Double handling of such material shall be performed at no additional cost to the Owner.

D. Excavated material, if to be reused as backfill material or a component of the backfill, shall be segregated as required by these Contract Documents. Topsoil, where required to be replaced, shall be stacked separately from other excavated materials and shall not be allowed to be mixed with other excavated materials.

E. All waste and excess excavated materials become the property of the Contractor and must be disposed of off-site in a lawful manner. The Owner, at his discretion, reserves the right to take ownership and possession of samples of excavated materials.

3.03 EXCAVATION BELOW GRADE AND REFILL

A. Whatever the nature of unstable material encountered or the groundwater conditions, trench drainage shall be complete and effective.

B. If the Contractor excavates below the design subgrade through error or for the Contractor's own convenience, he may be directed by the Owner to provide additional dewatering below the new subgrade and refill the overexcavated area with crushed rock

wrapped in geotextile material to the elevation of the design subgrade, in which case the work of dewatering and excavating below grade and furnishing and placing the refill shall be performed at the Contractor's expense.

C. If the Contractor fails to properly dewater the trench or disturbs the subgrade before dewatering is sufficiently complete, Contractor may be directed by the Owner to properly dewater the area, excavate below the design subgrade and refill the overexcavated area with crushed rock wrapped in geotextile material to the elevation of the design subgrade at the Contractor's expense.

D. If the material at the level of trench bottom consists of unsuitable soft earth as determined by the Owner, the subgrade material shall be removed to the extent directed and the lower bedding zone extended with additional crushed rock and geotextile wrapping material.

The removal and replacement of unsuitable material (as determined by the Owner) by extending the geotextile wrapped crushed rock shall be considered and included within the price bid for the Work to a depth 12 inches below indicated subgrade or bottom of trench. Excavation and replacement of such unsuitable material beyond this limit which is not the result of Contractor error or improper dewatering and/or protection of the excavation shall be paid as separate unit cost bid item in accordance with Section 01270.

3.04 BACKFILLING

A. Pipe Trench.

1. Crushed rock placed within the lower pipe bedding zone shall be placed and compacted in a manner that it provides a hard, firm, unyielding and stable surface. Crushed rock shall be placed in lifts not exceeding 8 inches in thickness. Each lift of crushed rock shall be compacted by at least two (2) passes of a flat plate vibratory compactor, vibrating plate attached to a backhoe, or similar approved equipment. All crushed rock at any depth shall be wrapped together in geotextile material to prevent migration of fines into the trench area.

2. Crushed rock shall be fully encased together in geotextile filter fabric. Geotextile filter fabric shall have a minimum of 12-inch overlaps at all edges.

3. Sand up to bottom of pipe shall be placed and compacted to 95 percent relative compaction, relative to the ASTM D1557 laboratory maximum density. The bedding layer shall be true to line and grade and shall be compacted by at least two (2) passes of a flat plate vibratory compactor, vibrating plate attached to a backhoe, or similar approved equipment.

4. As soon as practicable after the pipe has been laid, jointed and inspected by the Owner, backfilling of remaining bedding zone and pipe zone materials shall begin.

5. The placement of remaining sand within bedding zone and pipe zone up to 12 inches above the pipe shall be in even layers not to exceed 8 inches on each side of the pipe, with the difference in level on either side of the pipe not exceeding 4 inches. Compaction of materials to 95 percent relative compaction shall be by tamping or vibrating with at least two (2) passes of mechanical compaction equipment and shall be approved by the Owner.

6. Compaction above the springline shall be done in lifts equal to or slightly above the zone of influence for the compaction machine used, but shall not exceed the thickness specified in paragraph 3.04.A.5 of this Section. Compaction equipment with a zone of influence greater than the maximum allowed lift shall not be used. Care shall be taken to avoid performing any compaction which will directly affect the pipe surface.

7. In paved areas, trench backfill material shall be cement-sand slurry, cement-soil slurry, or soil cement up to the bottom of asphalt paving. Cement-sand slurry, cement-soil slurry or soil-cement shall be placed evenly throughout the trench. Cement-sand slurry shall conform to Section 02250, cement-soil slurry shall conform to Section 02260, and soil-cement shall conform to Section 02270.

8. In agricultural or landscaped areas, trench backfill material shall be cement-sand slurry, cement-soil slurry, soil-cement to 3 feet below the surface. Above and to 1 foot below the surface shall be select granular material in layers not to exceed 8 inches compacted to 95 percent relative compaction, relative to the ASTM D1557 laboratory maximum density. The remaining trench material in unpaved agricultural or landscaped areas shall be filled with reserved topsoil from initial excavation or imported topsoil free from rocks or stone fragments larger than 2 inches in their greatest dimension, asphalt, trash, and other objectionable materials in layers not to exceed 8 inches compacted to 90 percent relative compaction, relative to the ASTM D1557 laboratory maximum density.

B. The Contractor shall exercise care in the placement and compaction of backfill. It shall be the Contractor's responsibility to repair or replace pipe broken or damaged by the Contractor's action at no extra cost of the Owner.

C. The Contractor shall take necessary measures to avoid floating of pipe.

D. To prevent longitudinal movement of the pipe, dumping backfill material into the trench and then spreading will not be permitted.

E. Backfill shall be brought up evenly within the trench as specified for each zone. Each layer of backfill material shall be thoroughly compacted by rolling, tamping, or vibrating, as applicable, with mechanical compacting equipment carefully selected to prevent damage to the pipeline, structures and appurtenances. If rolling is employed, it shall be by use of a suitable roller or tractor, being careful to compact the fill throughout the full width of the trench.

F. Water jetting or puddling may be used if approved by the agency having jurisdiction and the Owner. If water jetting or puddling is desired to be used, the Contractor shall submit a plan for review and approval. Such approval, if granted, may be withdrawn by the agency having jurisdiction or the Owner if the method or results of jetting or puddling are unsatisfactory in the opinion of the agency having jurisdiction or the Owner.

G. The in-place density of the backfill materials, such as sand or local soil, will be tested by the Owner's Materials Inspector using either a nuclear gauge (D2922), modified sand cone test (ASTM D1556), water balloon test (ASTM D2167), or other such methods as appropriate for the type of backfill material being tested.

H. Compressive strength of cement-sand slurry, cement-soil slurry, or soil cement may be tested by Owner's Materials Inspector.

I. Backfill around structures shall be structural backfill as specified in Section 02230. The Contractor may use at his/her discretion, cement-sand slurry, cement-soil slurry, or soil-cement at no additional cost to the Owner and as approved by the Owner.

J. At the discretion of the Owner, the in-place density testing of crushed rock bedding or backfill may be performed in the trench or on a test pad constructed by the Contractor using equipment and methods similar to those used to compact the gravel in the trench. The Contractor shall furnish all labor, tools, equipment, materials and incidentals required to prepare the trench location(s) or test pad(s) for compaction testing by the Owner's Materials Inspector and shall be appropriate to the progress of the Work and satisfactory compaction results achieved.

3.05 RESTORING TRENCH SURFACE

A. Where the trench occurs outside of paved streets, in shoulders or sidewalks, or in cross-country areas, thoroughly consolidate the backfill and maintain the surface as the Work progresses.

B. The surface of any driveway, sidewalk, or any other area which is disturbed by the trench excavation and which is not a part of the paved road shall be restored to a condition at least equal to that existing before work began.

C. In sections where the pipeline passes through grassed areas, remove and replace with a native hydroseed approved by the Owner. The cost of hydroseeding shall be included in the various items of Work and no further compensation will be allowed.

D. Restoration of asphalt pavement shall be performed in accordance with Section 02512 and requirements of the agency having jurisdiction, including requirements of applicable encroachment permit(s).

E. Placement of asphalt paving over cement-sand slurry, cement-soil slurry or soil cement may be performed as soon as the surface will withstand the paving process without displacement or disruption.

F. Trench plates shall be recessed and pinned and may be used only as shown on the Drawings. Trench plates may not be used as a regular part of construction unless otherwise specified or shown on the Drawings.

G. Where allowed and where within any area where public vehicles may access, trench plates shall be recessed and pinned. Recessing of plates shall be such that there is minimal vertical transition between the top of finished pavement and top of plate. If, in the opinion of the Owner or agency having jurisdiction, the vertical transition is too large or will create driver discomfort or hazard, the Contractor shall raise or lower the trench plates as required to the satisfaction of the Owner or agency having jurisdiction at no additional cost to the Owner.

H. Placement of temporary or permanent pavement shall be performed prior to trench area being open to public vehicular traffic, except in areas where trench plates are allowed and used.

I. Where specified on Drawings or required by the agency having jurisdiction or required by the applicable encroachment permit(s), asphalt overlay shall be provided. Asphalt overlay shall be performed as per Section 02512.

END OF SECTION

This page intentionally left blank.

TECHNICAL PROVISIONS

SECTION 02230

GRANULAR AND ROCK MATERIALS

PART 1 - GENERAL

1.01 DESCRIPTION

A. Granular fill materials are specified in this Section, but their uses for bedding pipe, replacement of unsuitable material, pavement base, foundation support and similar uses are specified in detail elsewhere. The Owner may order the use of fill materials for purposes other than those specified in other Sections if, in the Owner's opinion, such use is advisable.

1.02 RELATED WORK

A. Dewatering and Drainage are included in Section 02140.

B. Earthwork is included in Section 02200.

C. Trenching, Backfilling and Compaction are included in Section 02220.

D. Asphalt Concrete Pavement and base are included in Section 02512.

1.03 SUBMITTALS

A. Submit to the Engineer in conformance with Section 01300:

1. Test reports for granular materials, gradation and quality. Submit for each material to be incorporated into the work.

2. Samples of granular materials in accordance with Standard Specifications for Public Works Construction (SSPWC), Subsection 306-1.3.7.

1.04 REFERENCE STANDARDS

A. California Test 217 (Caltrans) – Method of Test for Sand Equivalent.

B. State of California Standard Specifications for Construction of Local Streets and Roads

C. Standards Specifications for Public Works Construction (SSPWC)

PART 2 - PRODUCTS

2.01 MATERIALS

A. Crushed rock shall be uniformly graded, 3/4 inch maximum, and the product of crushing rock or gravel and shall fulfill the requirements and gradation of SSPWC Section 200-1.2.

The material shall compact to a hard, firm, unyielding surface and shall remain stable when saturated with water.

B. Sand used for the Bedding Zone and in the Pipe Zone, as indicated in the Contract Documents, shall consist of natural or manufactured granular materials free from frost, frozen lumps, organic material, mica, loam, clay and other deleterious substances, having an expansion when saturated with water of not more than 0.5 of one percent and a gradation conforming to the following requirements:

Sieve	Percent Passing
No. 4	90-100
No. 200	0-12

Sand shall have a sand equivalency greater than 30 as determined by the California 217 test method.

C. Blown sand for filling annular space between carrier pipe and casing shall be as described in Paragraph 2.01.B of this Section and additionally shall be free of lumps when loaded into the hopper and be adequate to flow unobstructed to fill all voids.

D. Structural base material fill shall be crushed aggregate base, free of organic material, loam, wood, trash, snow, ice, frozen soil and other objectionable material and shall be Caltrans Class 2 materials, per Section 02512.

E. Select granular material shall be substantially free of clay, organic material, loam, wood, trash and other objectionable material which may be compressible or which cannot be compacted properly. This material shall not contain stones larger than 4 inches in largest dimension, broken concrete, masonry, rubble, asphalt pavement or other similar materials and have a sand equivalent of not less than 30 as determined by the California 217 test method. Prior to use, select granular material shall be approved by the Owner's Materials Inspector. Material may be imported or from on-site.

F. Structural backfill shall be select granular material (imported or on-site).

G. Select fill shall be select granular material (imported or on-site).

H. Imported granular material shall be select granular material excepting that it shall be imported to the Site.

I. Aggregate base material shall be in accordance with State of California Standard Specifications for Construction of Local Streets and Roads and Section 02512.

J. Common fill shall be on-site granular material, substantially free of clay, organic material, loam, wood, trash and other objectionable material which may be compressible or which cannot be compacted properly. This material shall not contain stones larger than 4 inches in largest dimension, broken concrete, masonry, rubble, asphalt pavement or other similar materials. Prior to use, common fill material shall be approved by the Owner's Materials Inspector.

K. Top soil shall be on-site or imported material. On-site topsoil shall be the uppermost 8 inches of soil found on-site in existing unpaved areas and shall be free from concrete, asphalt concrete, trash, large roots, stumps, branches, or other such debris. Imported top soil material shall be topsoil obtained from a licensed nursery.

PART 3 - EXECUTION (NOT USED)

END OF SECTION

This page intentionally left blank.

TECHNICAL PROVISIONS

SECTION 02250

CEMENT-SAND SLURRY

PART 1 - GENERAL

1.01 DESCRIPTION

A. Cement-sand slurry materials and their mixing, placing, compacting and curing requirements are specified in this Section. Their use for trench backfill, foundation support, and similar uses are specified in detail elsewhere in the Contract Documents.

1.02 SCOPE OF WORK

A. Furnish all labor, materials, equipment and incidentals required and install cement-sand slurry as shown on the Drawings, required by the encroachment permit(s) and as specified herein.

1.03 RELATED WORK

A. Dewatering and Drainage are included in Section 02140.

B. Earthwork is included in Section 02200.

C. Trenching, Backfilling and Compaction are included in Section 02220.

D. Temporary Pavement is included in Section 02510.

E. Asphalt Concrete Pavement and Base are included in Section 02512.

1.04 SUBMITTALS

A. Submit to the Engineer in conformance with Section 01300:

1. Test reports of all types of cement to be used showing chemical analysis and physical properties.

2. Test reports for sand including sieve analysis, physical properties, sand equivalency and deleterious substance.

3. Mix design from the cement-sand slurry producer.

B. Submit to the Owner at time of cement-sand delivery, the mix design ticket from the cement-sand slurry manufacturer. Mix design ticket must match the same mix design approved for use by the Engineer.

PART 2 - PRODUCTS

2.01 MATERIALS

A. Cement:

1. Unless otherwise specified, Type V Portland Cement conforming to ASTM C150 shall be used.

2. Unless otherwise specified, the minimum content of cement per cubic yard of cement-sand mix shall be as follows:

   a. Trench backfill – 94 lbs (one sack cement-sand slurry).
   b. Void around concrete structures – 188 lbs (two sack cement-sand slurry).
   c. Other applications – 188 lbs (2 sack cement-sand slurry).

B. Water: Water free from injurious amounts of oils, acids, alkalis, salts, organic matter, or other deleterious substances.

C. Sand shall consist of natural or manufactured granular materials free from frost, frozen lumps, organic material, mica, loam, clay and other deleterious substances. Sand shall conform to requirements of SSPWC Section 200-1.5.3, except as noted below. Sand shall have a minimum sand equivalent of 30, the percent passing No. 200 sieve shall not exceed 12 percent and the fines shall be non-plastic.

D. No admixtures or fly ash shall be used unless otherwise approved by the Engineer.

PART 3 - EXECUTION

3.01 MIXING

A. Mixing shall conform to the requirements of SSPWC Section 201-1.4, except as noted below.

B. The total elapsed time between addition of water at the batch plant and discharging the complete mix shall not exceed 120 minutes.

C. Cement, sand and water shall be mixed thoroughly by a machine. Hand mixing will not be allowed.

D. Unless otherwise specified, minimum content of cement shall be as per Paragraph 2.01.A.2.

3.02 PLACEMENT

A. Cement-sand slurry may be placed by chutes, conveyors, buckets, pumps or tremies depending upon the application and accessibility.

B. For trench backfill, cement-sand slurry shall be placed continuously. To contain cement-sand slurry when filling long open trenches or open-ended structures in stages, the end points shall be adequately bulkheaded to prevent movement. Methods may include bulkheading with sandbags, earth dams or forms.

C. Contractor shall take necessary measures as approved by the Owner to prevent flotation or displacement of pipe and embedded items. Placing temporary sandbags, straps anchored to soil, lower slump cement-sand slurry or permanent concrete cap as approved by the Owner and recommended by the manufacturer of the item to be protected shall be used.

3.03 PLACEMENT OF PAVEMENT

A. Placement of temporary asphalt paving over cement-sand slurry may be performed as soon as the surface will withstand the paving process without displacement or disruption.

END OF SECTION

This page intentionally left blank.

TECHNICAL PROVISIONS

SECTION 02260

CEMENT-SOIL SLURRY

PART 1 - GENERAL

1.01 DESCRIPTION

A. Cement-soil slurry materials and their mixing, placing, compacting and curing requirements are specified in this Section. Their use for trench backfill is specified in detail elsewhere in the Contract Documents.

1.02 SCOPE OF WORK

A. Furnish all labor, materials, equipment and incidentals required and install cement-soil slurry as shown on the Drawings, required by the encroachment permit(s) and as specified herein.

B. Select soil – Native, imported, or treated soil material which meets the physical property requirements described in this Section. Where mentioned as a material for soil-cement slurry, the term "select soil" and "soil" shall be interchangeable.

1.03 RELATED WORK

A. Dewatering and Drainage are included in Section 02140.

B. Earthwork is included in Section 02200.

C. Trenching, Backfilling and Compaction are included in Section 02220.

D. Temporary Pavement is included in Section 02510.

E. Asphalt Concrete Pavement and Base are included in Section 02512.

1.04 SUBMITTALS

A. Submit to the Engineer in conformance with Section 01300:

1. Test reports of all types of cement to be used showing chemical analysis and physical properties.

2. Test reports for soil including sieve analysis, physical properties, and deleterious substances.

3. Mix design from the cement-soil slurry producer or from the Contractor if he will mix and produce his own cement-soil slurry, including compressive strength tests.

B. Submit to the Owner at time of cement-soil slurry delivery, the mix design ticket from the cement-soil slurry manufacturer if cement-soil slurry is not produced by the Contractor. Mix design ticket must match the same mix design approved for use by the Engineer.

PART 2 - PRODUCTS

2.01 MATERIALS

A. Cement:

1. Unless otherwise specified, Type V Portland Cement conforming to ASTM C150 shall be used.

B. Water: Potable water free from injurious amounts of oils, acids, alkalis, salts, organic matter, or other deleterious substances.

C. Soil:

1. Soil shall be select soil conforming to the following requirements:

   a. Select soil shall have less than 3 percent organic content.

   b. Topsoil with organics shall not be used.

   c. Soil shall consist of material not larger than 3/4 inches in diameter and with not less than 55 percent passing the No. 4 sieve.

   d. The soil material shall not be deleterious in its reaction with cement.

2. Excavated native soils meeting requirements as specified above may be used.

3. Excavated native soils may be mixed with sand, silt and/or gravel to achieve required quality of select soil and compaction at no additional cost to the Owner.

PART 3 - EXECUTION

3.01 MIXING

A. Mixing shall conform to the requirements of SSPWC Section 201-1.4, except as noted below.

B. The total elapsed time between addition of water at the batch plant and discharging the complete mix shall not exceed 120 minutes.

C. Cement-soil slurry shall attain 100 psi compressive strength at 28 Calendar Days in accordance with ASTM C39. Samples shall be taken using watertight plastic molds.

D. Cement, soil and water shall be mixed thoroughly by a machine. Hand mixing will not be allowed.

E. Unless otherwise specified, minimum content of cement shall be as per Paragraph 2.01.A.2.

F. Mixing shall be performed in central mixing plants to achieve a homogenous, well mixed cement-soil slurry product. If Contractor obtains permission to use private property for a central mixing plant, submit a copy of written permission and agreement from the property owner.

G. Soil, cement and water shall be stored separately.

H. The charge in a batch mixer or the rate of feed to a continuous mixer shall not exceed that which will permit complete mixing of all of the material. Dead areas in a mixer, in which the material does not move or is not sufficiently mixed, will not be permitted.

I. Mixing shall continue until a homogeneous mixture of uniformly distributed and properly coated aggregates of unchanging appearance is produced. Cement content shall not vary more than 5 percent from that specified.

3.02 PLACEMENT

A. Cement-soil slurry may be placed by chutes, conveyors, buckets, pumps or tremies depending upon the application and accessibility.

B. Cement-soil slurry shall be placed as trench backfill continuously. To contain cement-soil slurry when filling long open trenches or open-ended structures in stages, the end points shall be adequately bulkheaded to prevent movement. Methods may include bulkheading with sandbags, earth dams, or forms.

C. Contractor shall take necessary measures as approved by the Owner to prevent flotation or displacement of pipe and embedded items. Placing temporary sandbags, straps anchored to soil, lower slump cement-soil slurry or permanent concrete cap as approved by the Owner and recommended by the manufacturer of the item to be protected shall be used.

D. Cement-soil slurry shall be placed in a method which will prevent voids or separation of the cement-soil slurry mix.

3.03 PLACEMENT OF PAVEMENT

A. Placement of temporary asphalt paving over cement-soil slurry may be performed as soon as the surface will withstand the paving process without displacement or disruption.

END OF SECTION

TECHNICAL PROVISIONS

SECTION 02270

SOIL-CEMENT

PART 1 - GENERAL

1.01 DESCRIPTION

A. Soil-cement materials and their mixing, placing, compacting and curing requirements are specified in this Section. Their use for trench backfill, foundation support, and similar uses are specified in detail elsewhere.

1.02 SCOPE OF WORK

A. Furnish all labor, materials, equipment and incidentals required and install soil-cement slurry as shown on the Drawings, required by the encroachment permit(s) and as specified herein.

B. Wherever the requirement for a specified percent compaction of soil-cement is referred to herein it shall mean "at least the specified percent of maximum density as determined by ASTM D558 and modified to test the maximum compaction using a 10 pound hammer dropped 18 inches with 5 lifts as defined in ASTM D1557."

C. Select soil – Native, imported, or treated soil material which meets the physical property requirements described in this Section. Where mentioned as a material for soil-cement, the term "select soil" and "soil" shall be interchangeable.

1.03 RELATED WORK

A. Dewatering and Drainage are included in Section 02140.

B. Earthwork is included in Section 02200.

C. Trenching, Backfilling and Compaction are included in Section 02220.

D. Asphalt Concrete Pavement and Base are included in Section 02512.

1.04 SUBMITTAL

A. Submit to the Engineer in conformance with Section 01300:

1. Test reports of all types of cement to be used showing chemical analysis and physical properties.

2. Test reports on optimum moisture content of soil.

3. Description of method and equipment to be used for mixing soil, cement and water.

4. Description of method and equipment to be used for drying soil if found to be wet.

5. Mix design, including compressive strength tests.

PART 2 - PRODUCTS

2.01 MATERIALS

A. Cement:

1. Unless otherwise specified, cement shall be Type V Portland Cement conforming to ASTM C-150.

2. Unless otherwise specified, the minimum content of cement shall be 94 lbs (1 bag) per cubic yard of soil-cement mix.

B. Water: Potable water free from injurious amounts of oils, acids, alkalis, salts, organic matter, or other deleterious substances.

C. Soil:

1. Soil shall be select soil conforming to the following requirements:

a. Select soil shall have less than 3 percent organic content.

b. Topsoil with organics shall not be used.

c. Soil shall consist of material not larger than 2 inches in diameter and with not less than 55 percent passing the No. 4 sieve.

d. The soil material shall not be deleterious in its reaction with cement.

2. Excavated native soils meeting requirements as specified above may be used.

3. Excavated native soils may be mixed with sand, silt and/or gravel to achieve required quality of select soil and compaction at no additional cost to the Owner.

PART 3 - EXECUTION

3.01 GENERAL

A. Soil-cement shall be blended, mixed, placed and compacted in accordance with Section 301-3.1 of Standard Specifications for Public Works Construction, and as modified and supplemented in these Contract Documents.

B. Tests shall be performed by the Contractor for optimum moisture content of each type of soil material to be used for soil-cement. When native soil is used for soil-cement, such tests shall be performed at every 1,500 feet maximum of pipe installation. Cost of all tests shall be borne by the Contractor. The Owner may request additional tests at no additional cost to the Owner if it is believed that the type of soil has significantly changed.

3.02 MIXING

A. Select soil shall be mechanically thoroughly mixed with Type V Portland Cement and water.

B. Mixing shall be performed in central mixing plants using approved pugmill, continuous flow mixer or other such mechanical mixer to achieve a homogenous, well mixed soil-cement product. The Contractor may use an Owner designated area at one of the Owner's properties at 5700 or 6811 Grimes Canyon Road, Moorpark for purposes of performing soil-cement mixing. The Owner will decide which one property can be used by the Contractor depending on Owner's needs at the time of construction. If Contractor obtains permission to use private property for a central mixing plant, submit a copy of written permission and agreement from the property owner.

C. Soil-cement mixing shall be performed at approximately optimum moisture content (ASTM D1557).

D. Soil, cement and water shall be stored separately.

E. Water shall be so proportioned that the Owner may readily verify the amount of water in a batch or the rate of flow for continuous mixing.

F. The charge in a batch mixer or the rate of feed to a continuous mixer shall not exceed that which will permit complete mixing of all of the material. Dead areas in a mixer, in which the material does not move or is not sufficiently mixed, will not be permitted.

G. Mixing shall continue until a homogeneous mixture of uniformly distributed and properly coated aggregates of unchanging appearance is produced. Cement content shall not vary more than 5 percent from that specified.

H. After mixing is complete, the soil shall be so pulverized so as to loosen and break down larger soil masses coagulated during the mixing process.

I. The soil-cement mixture shall be transported from the mixing plant to the site in clean equipment provided with suitable protective devices to prevent material loss and significant moisture change. The total elapsed time between the addition of water to the mixture and the start of compaction shall not exceed 60 minutes.

3.03 PLACING, COMPACTING AND FINISHING

A. Soil-cement shall be uniformly compacted to at least 95 percent of relative compaction, relative to ASTM D558 laboratory maximum density.

B. When placed against areas with dry soils or previously placed and set soil-cement, the area must be slightly moistened prior to placement. This does not apply to placement of soil-cement over existing soil-cement during continuous placement work.

C. The mixture may be spread and compacted in one layer where the required thickness is 8 inches or less. Where the required thickness is more than 8 inches, the mixture shall be spread and compacted in two or more layers of approximately equal thickness, provided that the maximum uncompacted thickness of any one layer does not exceed 8 inches.

D. Final compaction of the mixture to the specified density shall be completed within 2-1/2 hours after the application of water during the mixing operation.

E. Exposed layers of soil-cement shall be kept moist for 3 Calendar Days or until the placement of subsequent layer. Any loose material on the surface of the completed layer shall be removed and the surface moistened immediately before placement of the next layer. No standing water will be permitted.

F. At the start of compaction, the mixture shall be in a uniform, loose condition throughout its full depth.

   During finishing operations, the surface of the soil-cement shall be shaped to the required lines, grades, and cross sections and shall be kept moist.

G. The finished surface of the soil-cement to be used for subgrade for pavement, sidewalk, curb and gutter, driveway or other roadway structures shall not vary more than ¼-inch from the specified or required grade and cross section.

3.04 CURING

A. After placement and compaction of the soil-cement is completed, it shall be protected against drying.

B. Curing shall be moist (water fogging), bituminous seal, or placing temporary asphalt pavement. If moist curing is used, exposed surfaces of the soil-cement shall be kept continuously moist with a fog spray for 3 Calendar Days.

C. If a bituminous curing is used, it shall be placed within 2 hours after completion of soil-cement and consist of liquid asphalt or emulsified asphalt meeting the requirements of SSPWC Section 203. The bituminous curing seal shall be applied in sufficient quantity to provide a continuous membrane over the soil at a rate of between 0.10 and 0.20 gallon per square yard of surface. It shall be applied as soon as possible after the completion of final rolling. The surface shall be kept moist until the seal is applied. At the time the bituminous material is applied, the soil surface shall be dense, shall be free of all loose and extraneous material, and shall contain sufficient moisture to prevent excessive penetration of the bituminous material.

D. If temporary asphalt pavement curing is used, it shall be placed within 2 hours after the completion of soil-cement.

E. If bituminous seal or temporary asphalt pavement is not placed within 2 hours after the completion of soil-cement, water fog curing shall be applied immediately. Such water curing shall continue until other method of curing is in place.

3.05 CONSTRUCTION JOINTS

A. Construction joints shall be moist, well compacted, clean and free of deleterious and loose material. Any loose materials remaining from a previous placement shall be removed prior to placement of adjoining soil-cement.

3.06 REPAIR

A. If the soil-cement is damaged, it shall be repaired by removing and replacing the entire depth of affected layers in the damaged area. Feathering will not be permitted for repair of low areas.

3.07 PLACEMENT OF PAVEMENT

A. Temporary asphalt paving may be placed over soil-cement immediately after compaction of soil-cement is completed.

END OF SECTION

This page intentionally left blank.

TECHNICAL PROVISIONS

SECTION 02306

MICROTUNNELING

PART 1 - GENERAL

1.01 SCOPE OF WORK

A. Perform the work required to install all piping shown on the Drawings, specified herein and required to provide for the construction of complete and operable pipelines using the microtunneling trenchless method of installation.

B. This Section specifies the construction of pipelines by using a "two-pass", non-man entry casing jacking method using a remotely controlled, laser-guided tunneling operation to install steel casing and subsequent pipe materials to the alignments and grades shown. Remote controlled tunneling operations apply to the trenchless casing installation method of microtunneling or remote controlled pipe jacking where the steel casing is installed directly behind the microtunneling boring machine (MTBM) and where the machine provides support to the excavation face at all times. The carrier pipe is subsequently installed to line grade within the jacked steel casing.

C. This Section defines in general terms the work to be completed. The Contractor shall have sole responsibility for the means and methods utilized to install the pipelines to the lines and grades shown and for preventing settlement and heave, all within the tolerances specified herein and subject to review by the Engineer.

D. Provide all items required to complete the work by microtunneling including but not limited to, the microtunnel boring machine, jacking system, microtunneling control system, spoil transportation and separation system, hoisting and/or lifting equipment and safety provisions.

1.02 DEFINITIONS

A. Casing: A steel pipe to support a bore in which the product/carrier pipe is inserted.

B. Controls: The system which synchronizes excavation, removal of excavated material, and jacking of casing to maintain overall balance to provide complete and adequate ground support at all times.

C. Cutterhead: Any rotating tool or system of tools on a common support which excavates at the face of a bore.

D. Earth Pressure Balance Machine: An earth pressure balance type of microtunneling or tunneling machine in which mechanical pressure is applied to the material at the face

and controlled to provide the correct counter-balance to earth and groundwater pressures in order to prevent heave or subsidence.

E. Guidance System: Relates the actual position of the MTBM to a design reference by a laser beam transmitted from the jacking shaft along the centerline of the casing to a target mounted in the shield.

F. Intermediate Jacking Station: A fabricated steel cylinder fitted with hydraulic jacks that is incorporated into a pipeline between two casing segments. Its function is to distribute the jacking load over the casing string on long drives.

G. Jacking Frame: A structural component that houses the hydraulic cylinders used to propel the microtunneling machine and casing. The jacking frame serves to distribute the thrust load to the casing and the reaction load to the shaft wall or thrust wall.

H. Jacking/Access Shaft (Pit): Excavation from which trenchless technology equipment is launched.

I. Jacking Shield: A fabricated steel cylinder from within which the excavation is carried out either by hand or machine. Incorporated within the shield are facilities to allow it to be adjusted to control line and grade.

J. Laser: An optical system projecting a beam to a target to provide guidance reference for the excavation.

K. Lubrication: A fluid, normally bentonite or polymer slurry, used to reduce jacking loads on the jacked casing.

L. Microtunneling: A remotely controlled, laser-guided pipe jacking process that provides continuous support to the excavation face. The microtunneling process provides ability to control excavation face stability by applying mechanical and/or fluid pressure to counterbalance the earth and hydrostatic pressures.

M. Microtunnel Boring Machine (MTBM): A remotely controlled, steerable, laser guided boring machine consisting of an articulated shield and a rotating cutting head.

N. Overcut: The annular space between the excavated hole and the outside diameter of the jacked casing. Expressed as a diameter to diameter comparison.

O. Product Pipe (Carrier Pipe): As it relates to this project, a pipe for conveyance of liquid.

P. Receiving/Exit Shaft (Pit): Excavation pit into which the microtunneling equipment is driven and recovered.

Q. Slurry: A fluid, normally water or water and bentonite mix, used in a closed loop system for the removal of spoil and to balance the groundwater pressure during microtunneling.

R. Slurry Chamber: Located behind the cutting head of a slurry pressure balance machine. Excavated material is mixed with slurry in the chamber for transport to the surface.

S. Slurry Line: A series of hoses or pipes that transport tunnel spoil and slurry from the face of a slurry microtunneling machine to the ground surface for separation.

T. Slurry Pressure Balance Machine: A microtunneling system which uses a low pressure fluid to balance the hydrostatic pressure at the face of the tunnel and to transport the excavated spoils to the surface.

U. Slurry Separation: A process where excavated material is separated from the circulation slurry.

V. Spoil: Earth, rock, and other materials removed during excavation.

W. Thrust Ring: A fabricated ring that is mounted on the face of the jacking frame. It is intended to transfer the jacking load from the jacking frame to the thrust bearing area of the casing section being jacked.

X. Settlement Monitoring Points: Survey Control Points installed into the ground along the pipe alignment and around the jacking and receiving shafts for monitoring surface settlement due to subsurface excavation.

1.03 REFERENCE STANDARDS

A. American Society for Testing and Materials (ASTM)

1. ASTM C150 - Standard Specification for Portland Cement

1.04 RELATED WORK

A. Jacking and receiving shafts are included in Section 02310.

B. Installation of pipe in casing is included in Section 02350.

C. Pipeline testing is included in Section 02660.

1.05 QUALITY ASSURANCE

A. In addition to the minimum qualification requirements stated in the Notice of Inviting Bids N-9, the MTBM operator(s) shall have at least 5 years of microtunneling experience as an operator and shall have operated a MTBM similar to the one proposed on this project on at least 3 other completed projects. The operator(s) shall have

successfully completed at least 3 drives in excess of 250 LF with carrier pipe larger than 48-inches in inside diameter.

B. Allowable Ground Surface Settlement and Heave Tolerances: Refer to Paragraph 1.10 of this Section

1.06 REFERENCE CODES

A. Cal/OSHA, State of California Administrative Code, Title 8, Industrial Relations, Chapter 4, Division of Industrial Safety, Subchapter 4, Construction Safety Orders; and Subchapter 20, Tunnel Safety Orders.

B. Occupational Safety and Health Administration (OSHA) Regulations and Standards for Underground Construction (29 CFR Part 1926, Subpart Section 1926.800, final rule dated June 9, 1989).

1.07 SUBMITTALS

A. Submittals: Submit the proposed method of construction and the sequence of operations to be performed during construction including the following:

1. A general description and schedule of the microtunneling procedure including but not limited to, shaft construction, set-up, above ground equipment, MTBM to be used, method of spoil removal, spoil separation, spoil disposal, disposal location, methods of protection and maintenance of work area, and dewatering methods.

2. Certification by the machine manufacturer that the microtunneling machine, or one of similar design, has been successful in installing casing in similar soil and groundwater conditions. The microtunneling equipment shall employ a pressure balance system that will equalize soil and groundwater pressures and maintain stability of the excavation at all times.

3. Certification from the machine manufacturer that the machine to be used for the microtunneling operation has been thoroughly examined and found to be in sound physical and mechanical condition for the intended work to be performed. Should the machine manufacturer refuse to perform such inspection service, the service of a qualified person(s) selected by the Contractor and approved by the Owner will be allowed to be substituted. If the machine manufacturer or independent inspector(s) cannot certify that the machine is of sound enough condition to perform the work, then the Contractor must secure an alternate machine which will be able to be certified by the manufacturer or independent inspector(s). This certification does not relieve the Contractor of the responsibility of providing sound and adequate equipment to perform all the work under this Contract.

4. Working Drawings/Work Plan:

    a. Layout of jacking and receiving shafts, jacking equipment within the shaft, and above ground equipment at each shaft location. Relationship of the manhole within the pit shall also be provided.

    b. Shop drawings of tunnel machine, including configuration of cutter head, tooling and overcut proposed.

    c. Shaft and tunnel ventilation system details.

    d. Casing lubrication system details and proposed materials to be used for lubrication.

    e. Electrical system, lighting system, and onsite power generation system.

    f. Grade and alignment control system details.

    g. Groundwater control.

5. Details of slurry system and soil separation methods including proposed slurry formulations and calculations of the system capacity to handle flows required for pressure balanced working at all proposed distances and changes of elevations to and from the tunneling machine.

6. Jacking system details, intermediate jacking stations and their proposed spacing, method of operation, thrust capacity and sleeve details. Describe method of control to prevent the maximum allowable jacking force from being exceeded.

7. Description of lubrication mixing equipment, materials and proposed quantities for lubricating the casing during jacking operations.

    a. Submit Material Safety Data Sheets (MSDS).

8. Description of grout mix, equipment and procedure for grouting the exterior void space after the casing has been installed.

9. Theoretical jacking load calculations and maximum allowable casing jacking load calculations shall be prepared and submitted. Load calculations provided by the Contractor shall be stamped and signed by a licensed California civil engineer. It shall be the sole responsibility of the Contractor to determine the maximum anticipated construction loads, including jacking forces, and to ensure that the anticipated loads are implemented in the Manufacturer's design of the casing, subject to Engineer's review.

10. Thrust block calculations showing that the thrust block can adequately withstand the maximum jacking load anticipated with a minimum safety factor of 2.0.

11. Calculations that clearly state the maximum allowable face pressure or slurry pressure which can be exerted at the tunnel face without fluid loss to the surface, other structures or features or heave of the ground.

12. A proposed contingency plan for potential situations that may occur during tunneling operations shall be provided for the following scenarios:

    a. Cuttings do not settle/separate with the separation equipment on site.

    b. The MTBM hits an obstruction in front of the cutter head, within the cutterhead of the MTBM, or along the edge of the MTBM cutterhead that stops the forward progress of the MTBM.

    c. The target laser is distorted by heat and/or humidity or has been knocked out of alignment.

    d. The jacking pressures start to move up rapidly and there is reasonable concern for exceeding the maximum allowable jacking pressures prior to completing the jacking operations to the reception pit.

    e. The MTBM "freezes" during microtunneling operations.

    f. The ground or a structure above the tunnel heaves or settles.

    g. A frac-out or surface fracture situation occurs.

13. A safety plan for personnel conducting the microtunneling and jacking operations and appurtenance installation.

14. Submit all survey plans and data required by Paragraph 3.04, Instrumentation and Monitoring, including but not limited to the following:

    a. Settlement Surveying and Monitoring Plan in accordance with Paragraph 3.04 of this Section.

    b. Building and Structures Assessment Plan in accordance with Paragraph 3.04 of this Section.

    c. Initial Survey in accordance with Paragraph 3.04 of this Section.

    d. Final Survey in accordance with Paragraph 3.04 of this Section.

15. Documentation demonstrating that the MTBM operator meets the experience requirements in paragraph 1.05.A, including names and phone numbers of people who can verify the information, the project name, owner, drive distance, and diameter of the carrier pipe.

16. A plan for removal and disposal of timbers containing creosote that may be encountered under the J Street drain.

B. Jacking Operations Log:

1. Provide a sample of jacking operation logs and daily reports prior to beginning microtunneling.

2. Log all jacking operations. The jacking operations logs shall be transcribed to paper and submitted to the Owner once per Working Day.

3. As a minimum, the jacking operations log shall consist of the following:

a. The position of the tunneling machine in relation to design line and grade.

b. Jacking forces exerted on the casing at each section.

c. The starting time and finish time for each casing section crew shift each Working Day.

d. The station at the beginning and end of each casing section.

e. The position of steering jacks.

f. Inclination and torque of cutter head.

g. Slurry pressure and flow for both feed and return to/from the MTBM.

h. Viscosity and specific gravity of slurry provided to the face of the MTBM.

i. Hydraulic pressure.

j. Evidence of settlement and heaving.

1.08 PROJECT CONDITIONS

A. Provide adequate ventilation in the shafts at all times. Air quality in the shaft shall be tested immediately prior to each change in shift. Air quality in the tunnel shall be tested prior to personnel entry and periodically thereafter as required by law.

B. Provide adequate lighting in the tunnel shafts and around equipment being utilized. Power and lighting circuits shall be separated and thoroughly insulated.

1.09 SAFETY

A. The Owner has obtained from the State of California, Department of Industrial Relations, Division of Occupational Safety and Health Administration (Cal/OSHA) an underground classification of "Potentially Gassy" for these crossings. The tunnel classification is included in Appendix C. Perform Work in conformance with all applicable federal, state, and local safety requirements.

B. The Contractor shall submit his safety plan for the Engineer's information only. Safety on the Site shall be the sole responsibility of the Contractor; therefore, the submitted plan will not be subject to approval by the Engineer. At a minimum, the plan shall include:

1. Safety plan for shaft access and exit, including ladders, stairs, walkways, and hoists.

2. Protection against improper mechanical and hydraulic equipment operations, and for lifting and hoisting equipment and material.

3. Ventilation and lighting details.

4. Monitoring for hazardous gases.

5. Protection against flooding and means for emergency evacuation.

6. Protection of shaft including traffic barriers, accidental or unauthorized entry, and falling objects.

7. Safety supervision responsibilities.

1.10 DESIGN CRITERIA

A. Microtunneling Equipment: Use only microtunneling equipment reviewed and accepted by the Engineer, meeting the requirements specified in this Section for the microtunneling work described. Equipment shall be designed to minimize movement of ground outside the microtunneling operations, and minimize settlement and heave of the ground surface.

B. Allowable Ground Surface Settlement and Heave Tolerances: Control ground surface settlement and heave to the following tolerances:

1. 1/2 inch for paved or unpaved roadways.

2. 1 inch within open space areas with no surface facilities.

C. Thrust Block: The thrust block shall be normal (perpendicular) with the proposed pipe alignment and shall be designed to withstand the maximum jacking forces to be used with a factor of safety of at least 2.0, without excessive deflection and displacement.

PART 2 - PRODUCTS

2.01 MATERIALS

A. Steel Casing: Steel Casing shall be specifically designed for microtunneling and have the capacity to withstand the maximum jacking load anticipated when combined with a safety factor of 1.5. The casing shall also be designed to withstand long-term soil and groundwater loads and surcharges reasonably anticipated. The minimum casing thickness shall be 0.75 inches.

B. Lubrication: Lubrication shall consist of bentonite and/or polymers and potable water. Polymers shall be non-toxic and shall not be used until the MSDS is submitted and reviewed and approved.

C. Grout: Grout for the void space between the casing and the soil shall conform to the following:

1. Cement: Type V conforming to ASTM C150.

2. Grout: Grout shall contain at least 8 sacks of cement per cubic yard of mix.

3. Fineness Modulus: Between 1.50 and 2.00.

Sieve Size	% Passing by Weight
No. 8	100
No. 16	95-100
No. 30	60-85
No. 50	20-50
No. 100	10-30
No. 200	0-5

4. Fluidifier: Use Celebex 209X manufactured by Celtite, Inc., or an equal approved by the Engineer.

5. Admixtures: Other admixtures may be used subject to the approval of the Engineer.

6. Compressive Strength: Minimum 50 psi in 24 hours, 300 psi in 28 Calendar Days.

7. Mechanical Joints: Casing mechanical joints, if used, shall be Permalok or an approved equivalent

2.02 EQUIPMENT

A. General: The microtunneling system selected shall be specifically designed for excavating, transporting and separating the soil materials which could routinely be encountered or expected along the alignment of the proposed pipeline.

B. Microtunnel Boring Machine (MTBM): The Contractor shall employ equipment that will handle the various anticipated ground conditions. In addition, the MTBM shall:

1. Be capable of maintaining the tunnel stability under wet and adverse soil conditions and preventing loss of ground through the machine. The MTBM shall provide satisfactory support of the excavated face at all times.

2. Be articulated to allow steering.

3. Incorporate a suitable seal between the MTBM and the leading casing.

4. Provide protection to the electric and hydraulic motors and operating controls against water damage.

5. Use bi-directional drive on the cutterhead wheel, and/or adjustable fins or other means, to control roll.

6. Be a pressurized face-tunneling machine that will exert a controllable pressure against the face, during both excavation and shutdown periods, to support the excavation face, prevent groundwater inflows, and prevent loss of ground. A closed-face cutterhead designed to minimize loss of ground shall be provided. Pressurized face tunneling machines shall control the volume of excavated material removed at the tunnel face and coordinate the machine advance rate to avoid over or under excavation.

7. Be capable of removing obstructions as defined in Paragraph.3.03.E of this Section.

C. Automated Spoil Transportation System – Slurry Microtunneling Systems: Provide a MTBM which includes an automated spoil transportation slurry system which shall balance the ground water pressures by the use of a slurry pressure balance system. System shall be capable of adjustment required to maintain face stability for the range of ground conditions to be encountered on the project and shall monitor and continuously balance the groundwater pressure to prevent loss of slurry or uncontrolled ground water inflow.

1. Manage the pressure at the excavation face by use of the variable speed slurry pumps, pressure control valves, and flow meters.

2. Include a slurry bypass unit in the system to allow the direction of flow to be changed and isolated, as necessary.

3. Have a spoil transportation system that will remove soil in balance with excavation and advance.

EPB Microtunneling systems shall:

1. Monitor and continuously balance the soil and groundwater pressure. The system shall be capable of adjustments required to maintain face stability for the particular soil condition encountered to prevent inflow or heave of the ground or for uncontrolled groundwater inflow.

2. Maintain the pressure at the excavation face by controlling the volume of spoil removal with respect to the advance rate. Monitor the speed of the rotation of the screw conveyor and the amount of any soil conditioning agent added.

D. Slurry Separation Equipment: Provide a slurry separation system to achieve the following:

1. Provide adequate separation of the spoil from the slurry so that slurry with a sediment content within the limits set by the Contractor's Work Plan is returned to the cutting face for reuse. A centrifuge may be implemented as deemed necessary by the Work Plan. Appropriately contain spoil at the Site prior to disposal.

2. Use the type of separation process suited to the size of the tunnel being constructed, the soil types being excavated, and the work space available at each work area for operating the plant.

3. Carefully monitor the composition of the slurry to maintain the slurry weight and viscosity limits defined by the Contractor's Work Plan.

E. Pipe Jacking Equipment: Provide a MTBM operation which includes a pipe jacking system with the following features:

1. Main jacks mounted in a jacking frame located in the jacking shaft.

2. Jacking system which successively pushes the MTBM along with a string of connected casings toward a receiving shaft.

3. Sufficient jacking capacity to push the MTBM and the casing string between the shaft locations identified on the shop drawings and shown on drawings.

4. Hydraulic cylinder extension rates which are synchronized with the excavation rate of the MTBM, as determined by the soil conditions.

5. Develops a uniform distribution of jacking forces on the end of the casing by use of spreader rings and packing.

6. Provides and maintains a casing lubrication system at all times to lower the friction developed on the outside surface of the casing during jacking.

F. Remote Control System: Provide a MTBM which includes a remote control system with the following features:

1. Allows for operation of the system without the need for personnel to routinely enter the tunnel. Have a display available to the operator, showing the position of the shield in relation to a design reference together with other information, including, as a minimum, roll, pitch, inclination, complete guidance system, valve positions, thrust force, cutterhead torque, rate of advance, installed length and spoil transport.

2. Integrates the system of excavation and removal of spoil and its simultaneous replacement by casing. As each casing section is jacked forward, the control system shall synchronize all of the operational functions of the system.

G. Active Direction Control: Provide a MTBM which includes an active direction control system with the following features:

1. Controls line and grade by a guidance system.

2. Is equipped with a high intensity laser.

3. Is capable of maintaining grade and line to the specified tolerances.

4. Provides active steering information which shall be monitored and transmitted to the operating console. As a minimum, this information shall include location of the laser beam on the target, location of the cutter head.

5. Provides positioning and operation information to the operator on the control console.

H. All equipment shall be suitably insulated so as not to exceed the contractual and specified noise limitations.

I. Provide all appropriate safety equipment as necessary for the Contractor's method and operation of construction and as required by all applicable laws and regulations.

PART 3 - EXECUTION

3.01 JACKING AND RECEIVING SHAFTS

A. Jacking and receiving shafts for microtunneling shall be constructed in accordance with the requirements of Section 02310, Jacking and Receiving Shafts.

3.02 WORK AREA PREPARATION AND MAINTENANCE

A. The Contractor shall be responsible for means and methods of tunneling and casing jacking operations and shall ensure the safety of the work, the Contractor's employees, the public, and adjacent property, whether public or private.

B. Maintain clean working conditions inside the jacking operation area and remove spoil, debris, equipment, and other material not required for operations.

C. Microtunneling surface equipment shall be organized for each drive in such a manner as to enable proper operation at all times, to minimize impacts to property owners, and to maintain traffic control patterns shown on the traffic control drawings and specified in the Contract Documents.

D. Power generation equipment and any other equipment operating on or with fuel or lubrication oils shall be provided with suitable barriers and safeguards to ensure no loss of oil to drains or water courses or to contaminate the ground.

3.03 TUNNELING OPERATIONS

A. Alignment Establishment:

1. Check baseline and benchmarks at the beginning of the Work and report any errors or discrepancies to the Engineer.

2. Use the baseline and benchmarks shown on the Drawings to furnish and maintain reference control lines and grades for the carrier pipe construction. Use these lines and grades to establish the exact location of the pipeline excavation, and structures.

3. Establish and be responsible for accuracy of control for the construction of the entire project, including jacking and receiving shaft locations, structures, excavation, pipe alignment, and grade.

4. Establish control points sufficiently far from the tunnel operation not to be affected by ground movement.

5. Check the primary control for the microtunneling system against an aboveground undisturbed reference at least once each week and not greater than 250-foot intervals of casing installed.

B. Tolerances:

1. The tolerance in the grade and alignment of the microtunnel casing shall comply with the following such that a continuous slope is maintained, and no portion of the alignment slope is reversed:

    a. Maximum departure from established grade shall not exceed a total of 1 inch.

b. Maximum departure from established line shall not exceed 1 inch.

2. Record the exact position of the MTBM at 50-foot intervals and a minimum of once per shift to ensure the alignment is within the specified tolerances. Make the survey at the MTBM to allow immediate correction of misalignment before allowable tolerances are exceeded. The tunnel guidance system may be used; however, select times to measure and record this information after the air temperatures have stabilized throughout the casing to verify accurate readings.

3. When the excavation is off line or grade, return to the design line and/or grade at a rate of not more than 1-inch per 25 feet.

4. If allowable tolerances are exceeded, the Contractor shall bear full responsibility and expense for correction (redesign, reconstruction, etc.). If the redesign is required, the Contractor shall obtain the services of a Professional Engineer registered in the State of California for the redesign. The installed pipe must be capable of meeting the intent of the design shown on the Drawings. Drawings showing the changes shall be submitted to the Engineer for review. Contractor shall bear all costs associated with any required redesign and correction work, including costs associated with the Engineer's review.

5. Perform a verification survey with a transit or total station of the installed pipe from shaft to shaft after removal of the MTBM. Document measured conformance to design line and grade of the pipe together with locations and deviation (distance and direction) of any out-of-tolerance locations.

C. Microtunneling and Jacking of Casings:

1. Conduct microtunneling operations in accordance with applicable safety rules and regulations and use methods which include due regard for safety of workers, and protection for adjacent structures, utilities, and the public.

2. Keep tunnel excavation within the rights-of-way indicated on the Drawings and to the lines and grades shown.

3. Locate equipment powered by combustible fuels at suitable distances from shafts and protect equipment to prevent the possibility of explosion and fire in shafts or the casing and/or carrier pipe.
4. The rate of advance of the MTBM shall be matched with the rate of spoil removed to avoid over-excavating. The advance rate and the volume of material excavated shall be monitored and adjusted, as required, to avoid loss of ground, over-excavation, or surface heave.

5. Make the excavation of a minimum sufficient size to permit casing installation by jacking with allowance for injection of the lubricant into the annular space. The overcut shall not exceed 1.5 inches.

6. Sections of casing pipe shall be joined either using a mechanical joint such as Permalok or approved equivalent or be fully welded. Mechanical connectors shall be fully welded to sections of casing pipe prior to arrival at the site and jointed all in accordance with the manufacturer's recommendations. The completed joint shall at all times be watertight and maintain integrity during installation of the works and until the carrier pipe has been placed and grouted.

7. Maintain an envelope of lubricating slurry around the exterior of the casing during jacking and excavation operation to reduce the exterior friction and possibility of the casing seizing in place and keep an open annulus outside casing. Water jetting of the ground to advance the casing is not permitted.

8. If the casing "freezes" or the forward movement of the MTBM is stopped for any reason, a recovery access shaft may or may not be permitted or feasible depending on the physical constraints and the Contractor's ability to obtain permission to construct a recovery access shaft from the agencies having jurisdiction. The Contractor shall be responsible for all costs associated with recovery of the MTBM, including, but not limited to permits, shaft construction, demolition and replacement, and utility relocation. Recovery shafts shall be performed in accordance with the requirements of Section 02310. The Contractor shall submit a contingency plan in accordance with Paragraph 1.07.A.12 of this Section.

9. In the event a section of casing is damaged during the jacking operation, or joint failure occurs, as evidenced by visible ground water inflow or other observations, use one of the following procedures to correct the damage, as directed by the Engineer, at no additional cost to the Owner:

    a. Slightly damaged casing which maintains casing barrel and joint structural integrity, may, if access is possible, be repaired in place with a method approved by the casing supplier.

    b. Severely damaged casing shall be removed from the excavation by surface excavation, subject to the approval of the agencies having jurisdiction and the Engineer or by jacking it through the excavation and removing it at the receiving shaft.

10. The pressure applied by the MTBM at the tunnel face in soil materials other than rock shall be maintained at all times between the measured active earth pressure and the estimated passive earth pressure.

11. During slurry microtunneling the pressure applied at the tunnel face to balance the groundwater shall be continuously maintained at a level slightly in excess of normal hydrostatic pressure but at a pressure less than that required to force slurry to the surface, or to other underground structures or facilities.

12. Excavation shall be performed entirely within the shield and no excavation in advance thereof will be permitted.

13. Operations shall be maintained within the parameters established by the Contractor's submittals. Proposed deviations from submitted parameters shall be resubmitted, with reasoning, to the Engineer for review. Operations shall cease if operational parameters fall outside those required for controlled operation or the limits established by the Contractor's submittals and the specifications. Operations shall also cease if an element of the system required for proper control and operation is unavailable. Any such events shall be brought to the immediate attention of the Owner.

14. Operations shall be stopped if they result in casing damage or any surface disruption. The Contractor shall propose immediate action for review and approval by the Engineer to remedy the condition. The cost for such remedies as required shall be borne by the Contractor.

15. The Contractor shall transport from the face and dispose of all excess excavated materials promptly and properly away from the Site in such a fashion that vehicles do not create a dirt nuisance. Slurry to be removed from the Site shall be pumped into suitable tankers and legally disposed of at approved facilities.

16. Care shall be taken not to create ground loss during shield or MTBM exit/entry through jacking or receiving shaft excavation support. Where necessary, a shaft seal, dewatering or other approved method shall be utilized to minimize any loss.

17. Where external ground or hydrostatic pressure is greater than the resisting force of the shield or MTBM and the pipe string, the Contractor shall provide additional restraint, in a form acceptable to the Engineer, against the pipe string and/or shield or MTBM being forced back into the jacking shaft.

18. Before jacking commences, all pipes and, as required, intermediate jacking station assemblies shall be available to complete the operation.

19. Before any particular section of pipe jacking between respective jacking and receiving shafts commences, both of these shafts shall have been completed.

20. Special care shall be taken when securing the pipe guide rails and/or jacking frame in the jacking shaft to ensure correctness of the alignment, grade, and stability of the pipe. Pipe jacking or microtunneling shall not commence until the concrete or other materials forming the jacking reaction wall have attained the required strength.

21. The location of alignment laser or other datum control equipment shall be placed and secured so as not to be affected by jacking thrust loads.

22. Contractor shall employ an acceptable lubricant around the pipe and shall manage the build-up of jacking loads with application of lubricant as required to maintain jacking loads below the maximum capacity of the pipe. Application of lubricant

shall commence as soon as practically possible after commencement of each drive and continue throughout the drive.

D. Mixing and Injection of Grout:

1. All materials shall be constantly agitated within the mixer, and free from lumps before introduction into the pressure grout hoses. Grout shall flow unimpeded and shall completely fill all voids. Grout not injected after 90 minutes of mixing shall not be used and shall be properly disposed of.

2. The spacing of contact grout holes for the casing shall be as shown on the Drawings. Threaded grout ports shall be installed prior to jacking operations. Drilling grout holes through casing will not be permitted.

3. The grouting process shall be operated and controlled so that the grout will be delivered uniformly and steadily.

4. Grouting shall progress from grout hole to grout hole in the sequence indicated in the approved Shop Drawings.

5. In general, grouting will be considered completed when less than one cubic foot of grout of the accepted mix and consistency can be pumped in 5 minutes under the specified maximum pressure. After the grouting is finished, the pressure shall be maintained by means of a ball-valve or other suitable device until the grout has set to the extent that it will be retained in the grout hole. At the completion of grouting, casing grout fittings shall be sealed with screw type plugs, and welded upon completion of grouting.

6. The minimum grouting pressure shall be 5 pounds per square inch (psi) at the grout hole collar connection, unless otherwise directed by the Engineer.

7. The maximum sustained grouting pressure shall be 10 pounds per square inch (psi) at the grout hole collar connection and shall not exceed ¾ of the overburden pressure.

8. The Contractor shall provide and maintain a minimum of three calibrated and certified working pressure gauges for use in monitoring grout placement at the grout hole collar connection.

9. Provide means for lubricant (bentonite slurry or polymers) around exterior of the casing to escape while it is being displaced by the grout.

10. Casing grouting operations are to be performed in the presence of the Owner. Notify the Owner in writing at least 1 week in advance of starting grouting operations.

11. Take all necessary precautions to protect and preserve the interior surfaces of the casing from damage. Grout spills shall be minimized and cleanup shall proceed immediately after grouting. Any damage to the pipe caused by or occurring during the grouting operations shall be repaired by a method approved by the Engineer at no additional cost to the Owner.

12. During grouting work, provide for adequate disposal of all waste and wastewater. Remove and properly dispose of all waste grout resulting from grouting operations.

13. As soon as jacking has been completed with the casing pipe in its final position, any remaining annulus void around the exterior periphery of the installed casing pipe shall be filled under pressure with a cement based grout in accordance with this Section.

14. The Contractor shall attempt to place grout even when the annulus is known to contain bentonite or polymer lubricant and shall demonstrate to the Owner that no grout is being taken before requesting cessation of the grouting operations.

15. For all pipeline diameters, as soon as jacking has been completed with the pipe in its final position the "eye" around the pipe at both jacking and receiving shaft junctures shall be grouted to seal off water and soil entry into shafts or manholes. Where a preparatory seal is used during slurry operations, this grouting shall take place prior to the removal of this seal.

E. Obstructions During Microtunneling:

1. Obstructions shall be defined as an object, objects or portions of objects located within the cross sectional area to be excavated by the microtunneling system that stop the forward progress of the microtunneling system and either:

   - Have a principal (largest) dimension greater than one-third the external diameter of the casing being installed and an unconfined compressive strength (UCS) of greater than 3,000 psi; or
   - Have a principal (largest) dimension greater than 16 inches but no more than one-third the external diameter of the casing being installed and a UCS of greater than 30,000 psi.

2. Creosote timbers encountered under the J Street drain shall not be considered obstructions.

3. Remove, clear or otherwise make it possible for the microtunneling system and casing to progress past or through obstructions in accordance with the Contractor's submitted contingency plan.

4. The Contractor shall receive no additional compensation for removing, clearing or otherwise making it possible for the microtunneling system to progress past objects that are not defined as obstructions per the above definition.

5. The Contractor will receive payment for obstruction removal shafts, which shall include the removal of the obstruction, if the dimension of the obstruction is greater than described herein, and subject to the following requirements:

    a. Notify the Owner immediately upon encountering an obstruction that stops the forward progress of the work.

    b. Upon written authorization by the Owner, proceed with removal of the obstruction by means of obstruction removal procedures in accordance with the Contractor's approved submittals.

    c. No excavation shall be carried out within 5 feet of the front of the cutter head without the Owner's knowledge and written approval.

6. The Contractor may propose alternative methods for removing, clearing or otherwise making it possible for the microtunneling system to progress past obstructions, however, any such method that does not allow visual observation of the nature of the obstruction to be made will not be considered for additional payment.

3.04 INSTRUMENTATION AND MONITORING

A. General:

1. Conduct construction operations to minimize ground surface settlement and heave. The Contractor shall be responsible for damage due to settlement and heave caused by construction operations.

2. Submit a Settlement Surveying and Monitoring Plan for review prior to construction. The plan shall identify the location of settlement monitoring points, reference benchmarks, survey schedules and procedures and reporting formats.
3. Submit a Building and Structures Assessment Plan prior to construction. Pre-construction and post-construction assessment reports shall be provided for buildings and structures located within a distance of 30 feet from the proposed pipe centerline and within a distance of 50 feet from shafts. Photographs of existing exterior damage to structures visible from the public right-of-way in the vicinity of the pipeline alignment shall be included in the assessment reports.

4. Install and maintain a system of instrumentation to monitor the underground excavation operation and to detect movement in the soil, adjacent structures and utilities.

5. In the event of movement of the ground surface, structure or utility being detected or damage recorded, the Owner may order that the work be stopped and secured. Before proceeding, the Contractor shall correct any problems causing or resulting from such movement entirely at its own cost. It is the Contractor's responsibility to

monitor and immediately report to the Engineer ground settlement and heave which might affect the accuracy of temporary and permanent benchmarks.

B. Survey:

1. Initial Survey: Record the horizontal coordinates and elevations (with accuracy of 0.01 feet) for each survey point location. Reference survey points so that they may be accurately re-established if lost or destroyed.

2. Unless otherwise directed, settlement-monitoring points shall be established along the pipe alignment and adjacent to jacking and receiving shafts as shown on the Drawings. Monitoring points shall be installed and initial readings taken and agreed upon prior to the commencement of any underground operations, including shaft construction.

3. Submit readings from the various instruments and settlement monitoring points to the Engineer on the same day the readings are taken. Reading shall commence before the commencement of shaft construction. Initial readings of all relevant points shall be taken before any excavation or construction is started. Monitoring shall continue weekly for at least 4 weeks after the completion of any drive section, and for at least two weeks after shaft backfill and site restoration has been completed.

4. Final Survey: At the end of all construction operations, make a final survey of all control points and settlement monitoring points established for instrumentation and observation. The final readings shall be submitted to the Engineer.

3.05 ENVIRONMENTAL CONTROLS

A. See Section 01560 for noise and vibration requirements.

B. Disposal of Spoil and Excess Material:

1. Spoil and excavated material shall be removed from the Site and shall be handled and disposed of in accordance with applicable laws and requirements of the Contract Documents.

2. The Contractor shall be responsible for locating and acquiring a site for the legal disposal of spoil and excess excavated material. The Owner reserves the right to take samples of any material.

C. Frac-out:

1. During microtunneling operation, the Contractor shall have at least one person responsible for continuously monitoring any open channel above the tunnel in the event a fracture or frac-out incident occurs.

2. In the event of a frac-out, the Contractor shall have immediately ready and employ the use of Thompson Barrels or similar equipment to isolate the intrusion of grout or lubricating slurry. The Contractor shall have tools and equipment on site at all times during microtunneling or grouting operations to quickly isolate and remove contaminant materials from the open channel.

D. Site Cleanup: Unless otherwise shown or specified, all existing surface improvements damaged or removed as a result of microtunneling operations shall be restored to their original condition.

3.06 QUALITY CONTROL

A. Pipelines will be subject to visual inspection by the Owner in addition to the testing requirements specified in Section 02660, Pipeline Testing.

END OF SECTION

This page intentionally left blank.

TECHNICAL PROVISIONS

SECTION 02310

LAUNCH AND RECEIVING SHAFTS

PART 1 - GENERAL

1.01 SCOPE OF WORK

A. The Contractor shall provide all equipment, materials and labor to construct launch and reception shafts for the Work designated in the Contract Documents.

B. The Contractor shall provide all additional supporting equipment not used directly in shaft construction. Equipment provided shall include that necessary to perform traffic control, dewatering, and utility relocation operations.

1.02 REFERENCE STANDARDS

A. American Concrete Institute (ACI)

1. ACI 506.2 – Specification for Shotcrete.

B. American Society for Testing and Materials (ASTM)

1. ASTM A 36 – Specification for Structural Steel.

C. American Welding Society (AWS)

1. ANSI/AWS D1.1 – Structural Welding Code – Steel.

D. Occupational Safety and Health Administration (OSHA)

1. OSHA Standard, Title 29, Code of Federal Regulations, Part 1926, Section 650 (Subpart P – Excavations).

2. CAL/OSHA State of California Administrative Code, Title 8, Industrial Relations, Chapter 4, Subchapter 4, Construction Safety Orders.

1.03 RELATED WORK

A. Dewatering and Drainage is included in Section 02140.

B. Guided Auger Boring is included in Section 02320.

C. Guided Pipe Ramming is included in Section 02315.

D. Jacked Steel Casing is included in Section 02325.

E. Installation of Pipe in Casing is included in Section 02350.

F. Environmental Protection is included in Section 02960.

1.04 QUALITY ASSURANCE

A. The engineer responsible for structural design shall be a professional civil or structural engineer registered in the State of California who has a minimum of five years experience in the design of earth retaining structures.

B. Settlement of adjacent property and/or facilities will not be permitted.

1.05 SUBMITTALS

A. All submittals shall be in accordance with the requirements given in Section 01300 – Submittals. No excavation shall be undertaken until receipt of the Engineer's written receipt of the submittals. All drawings and calculations shall be signed by a professional civil or structural engineer registered in the State of California. The submittals shall include the following:

1. The name and qualifications of the engineer responsible for excavation support system design.

2. A detailed, legible, written schedule of work and a separate sequence of work for shaft construction, in addition to the requirements of Section 01310, which shall include, but not be limited to:

   a. Mobilization
   b. Site preparation
   c. Installation of shoring
   d. Dewatering
   e. Excavation

3. A detailed groundwater control plan including placement of wells, surface water control, drainage control, and wastewater disposal, in accordance with Section 02140 – Drainage and Dewatering.

4. A monitoring system to evaluate shaft stability, safety, ground movements, and any nearby facilities and structures which could be affected by the Work, in accordance with Paragraph 3.02, this Section.

5. Details of materials handling, stockpiling, and disposal sites for excavated materials.

6. Detailed shop drawings which include the following:

   a. The dimensions of the shaft including: inside and outside dimensions, depth to shaft toe and depth to floor.
   b. The elevation of struts, braces, or other supports as related to the depth of excavation at intermediate stages of construction.
   c. Details of working slab, drains, and sump construction.
   d. Sizes, shapes, and material specifications for all support elements.
   e. Detailed method, procedure and sequence for preloading bracing elements in shaft. The use of any shims, steel wedges to maintain preloading forces shall be called out.
   f. Detailed plans and drawings that indicate supports installed to transfer loads and maintain shaft integrity during trenchless operations.

7. Detailed calculations which shall include the following:

   a. Estimates of likely deflections or deformations of the support system and shaft bottom, along with maximum tolerable values.
   b. The estimated earth loads imposed on the shoring during and after construction by the surrounding soils and groundwater.
   c. Calculations that indicate the arrangement of supports and construction sequence for proposed support system will provide adequate protection during all phases of construction.
   d. Calculations which demonstrate that the excavation meets the minimum factor of safety against collapse, sliding or bottom heave, as detailed in Paragraph 1.07, this Section.

8. Methods and sequencing of launch/retrieval of trenchless technology equipment through the shaft wall. Describe in detail the steps that will be taken to ensure that the soil is stable and that groundwater is controlled prior to launch/retrieval.

9. Shoring installation and removal plan

B. No work, including the set up of traffic controls for the launch or receiving shafts, shall be performed until the submittals required for this Section and all other sections related to the installation of casing and pipe through the casing have been accepted by the Engineer.

1.06 SAFETY

A. The Contractor shall be solely responsible for work area safety and shall conduct all operations so as to ensure the safety of all personnel on site.

B. All work shall be performed in conformance with all applicable federal, state, and local safety requirements.

1.07 DESIGN CRITERIA

A. The use of low or high frequency vibration to install or remove shoring or shoring components will not be allowed. High impact driven piles will also not be allowed.

B. Shaft excavation support systems and working slabs shall be designed to withstand all earth pressures, hydrostatic pressure, bottom heave, equipment loads, traffic and construction loads, and other surcharge loads, providing a safe and stable working environment at all times.

C. Groundwater control systems shall be designed, installed, and operated to control any groundwater inflows, prevent piping or loss of ground, and maintain stability of the excavation. Maintain groundwater at least 6 inches below the bottom of the shaft excavation.

D. Shaft excavation support systems shall be designed to minimize disturbance and settlement in surrounding soils, utilities, roadways and structures.

E. Shaft excavation support systems shall provide a minimum factor of safety against collapse, sliding or bottom heave of 1.5.

F. Shaft excavation support systems shall be designed in accordance with all applicable Cal/OSHA and OSHA requirements.

PART 2 - PRODUCTS

2.01 MATERIALS

A. All timber and structural steel used for the supporting systems, whether new or used, shall be sound and free from defects which may impair their strength.

B. Structural steel shall conform to ASTM A36 or higher strength unless approved otherwise.

C. All timber shall be structural grade, with a minimum allowable flexural strength of 1,500 pounds per square inch (psi).

D. Shotcrete shall conform to the requirements of ACI 506.2. Minimum design compressive strength shall be as required, but not less than 4,000 psi.

PART 3 - EXECUTION

3.01 GENERAL REQUIREMENTS

A. No excavation shall begin until the Contractor has demonstrated to the satisfaction of the Owner that the groundwater level has been lowered a minimum of 6 inches below the bottom of the planned excavation.

B. Shafts shall be located generally as shown on the Drawings.

C. The Contractor shall have sole responsibility for sizing the shafts. Shaft size shall be adequate for construction of any permanent structures indicated on the Drawings and to provide adequate room to meet the Contractor's operation requirements for trenchless construction, carrier pipe assembly and installation, and for backfill.

D. All shaft excavations shall be constructed with a concrete working slab equipped with a sump to pump out construction and storm water.

E. Measures shall be taken to adequately protect all utilities, structures, and other existing facilities from damage during construction. Utilities which cannot be adequately protected shall be relocated prior to shaft construction at the Contractor's expense.

F. All welding shall conform to the applicable provisions of ANSI/AWS D1.1.

3.02 INSTRUMENTATION AND MONITORING

A. Install excavation support system monitoring provisions as needed to assure proper performance of the Work, and to monitor the deflection of the excavation. Monitor performance of the excavation support systems for both horizontal and vertical deflections daily during excavation, and at intervals not to exceed seven Calendar Days following the completion of excavation work.

B. If monitoring data indicates that deflections have exceeded the maximum tolerable values as submitted with the shoring design under Paragraph 1.05.A.7, this section, the Contractor shall stop work immediately, notify the Owner, provide a redesign of the shoring system, and perform the necessary modification work to the shoring system to prevent further deflections. Any damage done to existing utilities or structures will be repaired at the Contractor's expense.

C. All monitoring data shall be submitted to the Owner at the end of each Working Day during excavation work, and within one day when measurements are taken after excavation.

3.03 ENVIRONMENTAL CONTROLS

A. Surface Water Control: Divert surface water runoff from the shafts and protect the shafts from infiltration or flooding by surface water, including discharge from any dewatering operations. The shaft perimeters shall be, at a minimum, lined with K-rail and fall protection fencing, unless otherwise approved by the Owner.

3.04 FINISHING

A. Remove all sheeting, shoring, bracing and other support members at the completion of the Work.

B. Remove all loose debris from within the shaft. Backfill with one sack cement-sand slurry unless otherwise shown on the Drawings.

C. Restore the work area disturbed by construction activities and repair or replace any existing utilities damaged by the Contractor or their work to original or superior condition as approved by facility owner.

END OF SECTION

TECHNICAL PROVISIONS

SECTION 02315

GUIDED PIPE RAMMING

PART 1 - GENERAL

1.01 SCOPE OF WORK

A. The work specified in this Section includes the requirements for steel casing installation using guided pipe ramming as designated in the Contract Documents.

B. This Section defines in general terms the work to be completed. The Contractor shall have sole responsibility for the means and methods utilized to install the casing to the line and grade shown on the Drawings and to prevent settlement, all within the tolerances specified herein and subject to review by the Engineer and Owner.

1.02 DEFINITIONS

A. Guidance System: A system which utilizes a LED target mounted behind the steerable bit of the pilot tube and a camera system to install the pilot tube to a specified line and grade.

B. Guided Pipe Ramming: A hybrid trenchless technique which utilizes a steerable pilot tube to guide the ramming of a casing pipe using a percussive hammer from a launch shaft to a receiving shaft. The soil enters into the pipe during ramming and is displaced by the wall thickness of the casing. The soil will remain in the casing until the ram has been completed and then may be removed by water, auguring, jet-cutting or compressed air.

C. Launch Shaft: An excavation from which trenchless technology equipment is advanced.

D. Obstruction: Any object or feature which stops the forward progress of the ram.

E. Pilot Tube: A steerable tube with a slant-faced head which is rotated to control the direction of tube advancement from the launch shaft to the receiving shaft. Once installed, the pilot tube provides a centerline for the casing installation.

F. Receiving Shaft: An excavation into which trenchless technology equipment is advanced and recovered following the installation of the casing.

1.03 REFERENCE STANDARDS

A. American Society for Testing and Materials (ASTM)

1. ASTM A139 - Standard Specification for Electric-Fusion (Arc)-Welded Steel Pipe.

2. ASTM A53 - Standard Specification for Pipe, Steel, Black and Hot-Dipped, Zinc-Coated, Welded and Seamless.

3. ASTM C150 – Standard Specification for Portland Cement.

1.04 RELATED WORK

A. Launch and Receiving shafts are included in Section 02310.

B. Dewatering and Drainage is included in Section 02140.

C. Installation of Pipe in Casing is included in Section 02350.

D. Pipeline Testing is included in Section 02660.

E. Environmental protection is included in Section 2960.

F. Noise and vibration is included in Section 01560.

1.05 QUALITY ASSURANCE

A. The surveyor responsible for line and grade control shall be a Licensed Surveyor registered in the State of California who has prior experience with similar projects.

B. Allowable Installation Tolerance: The maximum deviation at any point along the casing shall not exceed 2 inches from the line and/or grade shown on the Drawings.

C. Allowable Ground Surface Settlement: Ground surface settlement shall be controlled to the following tolerances:

1. One half (½) inch for all roadways.

2. One (1) inch within open space areas with no surface facilities.

D. Allowable Utility Settlement: Settlement of any utilities, shown on the Drawings or not, shall not exceed ½ inch.

E. The Contractor shall immediately notify the Owner, in writing, if any problems that would cause a schedule delay or a change to the submitted process/procedure are encountered with equipment or materials.

F. The Owner shall have full access to the launch and receiving shafts prior to, during, and following all guided pipe ramming operations. This shall include, but is not limited to, visual inspection of installed pilot tubes and casings, and verification of line and grade. The Contractor shall provide safe access in accordance with all safety regulations.

1.06 SUBMITTALS

A. All submittals shall be in accordance with the requirements given in Section 01300 – Submittals. All submittals requiring structural design shall be signed by a professional civil or structural engineer registered in the State of California.

B. The submittals shall include the following:

1. Work Plan: The Contractor shall submit a Work Plan which includes the details of the pilot tube and casing installation as well as the sequence of operations that shall be utilized during all phases of construction. The work plan shall also include the following:

   a. A detailed description of the equipment and procedures to be employed during guided pipe ramming operations. Provide manufacturer's literature describing in detail the pilot tube guidance system to be used. Describe method and capabilities for controlling ground conditions at the tunnel heading and preventing loss of ground. Provide calculations of the anticipated ramming force required to complete the installation and details of the method used to determine anticipated forces.

   b. Certification by the pipe ramming manufacturer of the thrust, condition, and operational characteristics of all equipment to be used for installing the specified casing.

   c. Shop drawings for all equipment, equipment setup areas, and staging areas in addition to launch and receiving shafts and casing alignment.

   d. Details of the pipe ramming equipment, complete with ramming capacity, diameter, pipe adapters, and manufacturer's literature. These details shall illustrate that the ramming force estimated to complete the ram does not exceed the available ramming capacity of the equipment, with the factor of safety specified herein.

   e. Details of the pipe lubrication system and description of pipe lubricants to be used during pipe ramming, including manufacture's literature and Material Safety Data Sheets.

   f. A spoils removal plan, including all equipment necessary to remove the material from the rammed casing. The plan shall also include the location and sequence of disposal.

g. Dewatering procedures and groundwater control details during trenchless operations, including launch and receiving seals, if used.

h. Material specifications and shop drawings of casing showing the pipe wall thickness, steel grade, and the maximum allowable axial force. The drawings shall include configuration of the cutting head shoe and overcut. A pipe certification of compliance shall be submitted.

i. Calculations demonstrating that the pipe selected has been designed to support the maximum anticipated earth loads and superimposed live loads, both static and dynamic, which may be imposed on the pipe. This calculation shall include the maximum allowable axial force that can be applied to the pipe during ramming operations with a minimum safety factor of 2.0.

j. A safety plan in accordance with Subsection 1.07 B.

2. A detailed and legible schedule of work, in addition to the requirements of Section 01310, which shall include, but not be limited to:

   a. Mobilization
   b. Site preparation
   c. Pilot tube installation
   d. Pipe ramming
   e. Grouting

3. Contingency Plan: The Contractor shall submit a proposed contingency plan for potential problems that may arise during guided pipe ramming operations. The contingency plan shall address the observations that would indicate a problem as well as the remediation methods to address it. The plan shall include the following scenarios:

   a. Obstruction encountered at the leading edge of casing.
   b. Utility strike.
   c. Deviation from planned casing alignment.
   d. Inability to complete the pilot tube installation.
   e. Settlement in excess of provided tolerances.
   f. Ramming forces in excess of estimated maximums.

C. Daily Submittals: The following information shall be recorded during guided pipe ramming operations and submitted to the Owner on a daily basis. Information shall be submitted within 2 hours of completion of the daily events or shift change, whichever is more frequent.

1. Field drawings for recording as-built conditions. The drawings shall be marked with all field information and shall be properly dated. This set of drawings shall be kept up to date.

2. Log of the guided pipe ramming operations. At a minimum the log shall consist of the following:

    a. The date, and the starting and finishing time of the work.
    b. Inclination, operating pressure, and rate of advance.
    c. Hammer strokes per minute.
    d. Pipe lubricant used (in gallons) and pumping pressure.
    e. Any problems encountered.

D. No work, including the set up of traffic controls for the launch or receiving shafts, shall be performed until the submittals required for this Section and all other sections related to the installation of casing and pipe through the casing have been accepted by the Engineer.

1.07 SAFETY

A. The Owner has obtained from the State of California, Department of Industrial Relations, Division of Occupational Safety and Health Administration (Cal/OSHA) an underground classification of "Potentially Gassy" for these crossings. The tunnel classification is included in Appendix C. The work shall be performed in conformance with all applicable federal, state, and local safety requirements.

B. The Contractor shall submit a detailed safety plan in accordance with Cal/OSHA standards, including provisions for lighting, ventilations and electrical systems safeguards.

1.08 DESIGN CRITERIA

A. Pipe ramming equipment shall be guided with a pilot tube for line and grade accuracy.

B. Pipe ramming equipment shall be sized to provide a minimum ramming force of 1.5 times the anticipated ramming force.

C. Control settlement to values show in Subsection 1.05.

PART 2 - PRODUCTS

2.01 MATERIALS

A. Steel casing shall:

1. Be new, smooth wall carbon steel pipe which conforms to ASTM Specification A139, Grade B.

2. Have the capacity to withstand the maximum axial force anticipated with a safety factor of 2.0. The casing shall also be designed to withstand reasonably anticipated long-term soil and groundwater loads.

3. Have a minimum yield strength of 50,000 psi.

4. The casing diameter shall be as shown on the Drawings. Casing wall thickness shall be determined by the Contractor but shall not be less than ¾ inch. Casing lengths shall be determined by the Contractor.

5. Have a difference in roundness between the major and the minor outside diameters not exceeding 1% of the specified nominal outside diameter, or ¼ inch, whichever is less.

6. Have an outside circumference which is within 1% of the nominal circumference, or ½ inch, whichever is less.

7. Have a minimum allowable straightness deviation in any 10-foot length of 1/8 inch.

8. Be furnished with 1½ inch minimum diameter grout holes which conform to ASTM Specification A53, Schedule 40, with threaded plugs.

   a. Space holes regularly on 20-foot centers. Longitudinal spacing between grout holes may be decreased to provide more extensive grouting, but shall not exceed 20 feet.
   b. Grout holes shall be fitted with countersunk, full face, rubber gaskets to prevent infiltration of displaced earth during the ramming process.

B. Steel casing joints shall be (1) a pressure fit type (Permalok or equal), or (2) welded. Steel casing for welding shall be square cut with beveled ends, using a full-penetration butt weld.

C. Grout used for filling voids outside of the casing pipe shall:

1. Be Type V Portland Cement conforming to ASTM C150.

2. Contain at least 8 sacks of cement per cubic yard of mix.

3. Have a fineness modulus between 1.5 and 2.

Sieve Size	% Passing by Weight
No. 8	100
No. 16	95-100
No. 30	60-85
No. 50	20-50
No. 100	10-30
No. 200	0-5

4. Use Celebex 209X manufactured by Celtite, Inc. as fluidifier, or an approved equal.

5. Use other admixtures subject to acceptance of the Engineer.

6. Have a minimum compressive strength of 50 psi in 24 hours, 300 psi in 28 Calendar Days.

D. Lubrication shall consist of bentonite and/or polymers and potable water. Polymers shall be non-toxic and shall not be used until the MSDS is submitted and accepted.

2.02 EQUIPMENT

A. The Contractor shall use guided pipe ramming equipment specifically designed for ramming through the soil materials which could routinely be encountered or expected along the alignment of the proposed pipeline. In addition:

1. The pneumatic pipe pusher/driving device selected shall be a mono-bloc design with rear cushion and Teflon slide seals. No bolts or threaded connections will be allowed.

2. Spoils shall remain in the casing during ramming operations.

3. The soil removal system shall be capable of being operated in a manner which will prevent loss of ground.

4. The amount of overcut shall be limited to less than 1 inch larger on radius than the outside of the rammed casing.

5. Pipe ramming equipment shall be sized according to the manufacturer's recommendations and the Contractor's knowledge of ramming in soils similar to those at the Site.

6. The lead casing shall be fitted with a reinforcing band/cutting shoe on the inner and outer diameter to prevent damage to the leading edge.

7. A pipe lubrication injection system shall be used to inject lubricants around the outside of the casing as required to decrease ramming forces. Provide a suitable pressure gage on the lubrication supply line.

8. The cutting shoe shall be fitted with bullet bits or other cutting bits to be used for penetration through wood or other hard objects.

PART 3 - EXECUTION

3.01 GENERAL REQUIREMENTS

A. The Contractor shall not begin guided pipe ramming until the following conditions have been met:

1. Required submittals have been made and the Engineer has reviewed and accepted them.

2. Launch and receiving shaft excavation has been completed and supported in accordance with Section 02310 – Launch and Receiving Shafts.

3. Groundwater levels have been lowered 6 inches below the bottom of the shaft excavation.

B. The Contractor shall install casing between the limits indicated on the Drawings to the specified lines and grades. Utilize methods that include due regard for safety of workers, adjacent structures and improvements, utilities, and the public. Locate launch and receiving shafts as identified on the Drawings unless proposed otherwise in the Work Plan accepted by the Engineer.

C. The Contractor shall perform all work in accordance with the requirements of Cal/OSHA. Perform gas testing by a certified tester in accordance with Cal/OSHA requirements.

D. The Contractor shall furnish all necessary equipment, power, water, and utilities for excavation, pilot tube installation, pipe ramming, lubrication mixing and pumping, removal and disposal of spoils, grouting, and other associated work consistent with the methods of construction.

E. The Contractor shall conduct all operations such that trucks and other vehicles minimize dust or noise nuisance in the streets and adjacent properties.

F. The Contractor shall promptly clean up, remove, and dispose of any spoils or spillage in accordance with the spoils removal plan.

G. The Contractor shall perform all work so as not to disturb adjacent structures, roadways, or existing utilities. Immediately repair any damage to the satisfaction of the agency or utility having jurisdiction.

H. Include both invert and inside crown elevations of the manholes and connecting pipe.

3.02 INSTALLATION

A. The Contractor shall use benchmarks to maintain lines and grades to establish the location of the pilot tube using a guidance system.

B. The Contractor shall submit to the Owner copies of field notes used to establish all lines and grades. The Contractor remains fully responsible for the accuracy of the installation.

C. If the guidance system alignment shifts or is moved off of design alignment and grade for any reason, the Contractor shall halt pilot tube operations and the guidance system shall be reset by qualified surveying personnel in accordance with accepted procedures.

D. If the casing installation exceeds the specified tolerances, the Contractor is responsible for correcting the installation. All corrective work shall be performed as described in the accepted Contingency Plan at no additional cost to the Owner.

E. The Contractor shall ram casing into place without damaging the casing. In the event a casing section is damaged during the ramming operation, the Contractor shall repair the casing in a method accepted by the Engineer and to the satisfaction of the Owner.

F. The Contractor shall provide groundwater control as required for proper execution of the work in accordance with Section 02140 – Dewatering and Drainage.

G. The Contractor shall transport and dispose of all spoils properly. No stockpiling shall be permitted at the launch shaft sites. Only use the disposal sites identified in accepted submittals.

H. Obstruction removal is subject to the following requirements:

1. Notify the Owner immediately upon encountering an obstruction.

2. Upon written authorization by the Owner, proceed with removal of the obstruction in accordance with the Contractor's submitted and accepted obstruction removal plan.

3. The Contractor shall take all necessary steps to remove any obstruction or otherwise make it possible to continue boring operations.

4. All obstructions less than or equal to 80% of the casing outer diameter are the responsibility of the Contractor, and will not be considered for additional payment.

5. Only obstructions larger than 80% of the casing outer diameter will be considered obstructions subject to this section.

a. All costs associated with delay, removal, and continued boring for the first two obstructions larger than 80% of the casing outer diameter shall be the responsibility of the Contractor and shall be included in the base bid.

b. Additional obstruction removal for the third obstruction and beyond of larger than 80% of the casing outer diameter will be paid at the amount given in Bid Item No. 43.

c. The Contractor must produce the obstruction and allow visual observation by the Owner to be considered an obstruction subject to this section.

I. In the event the Contractor encounters a problem during the Work and the situation is not covered by the Contractor's Contingency Plan, the Contractor shall propose alternative solutions for Owner's acceptance.

J. All void space between the soil and the rammed casing shall be grouted immediately upon completion of the guided pipe ram.

3.03 INSTRUMENTATION AND MONITORING

A. All crossing utilities and all utilities located horizontally within 5 feet of the exterior of the casing shall be positively located prior to construction. Where positive location cannot be performed at the crossing location without obtaining additional permits (other than encroachment permits), positive location shall be accomplished at the nearest two locations where it can be performed without acquiring additional permits (other than encroachment permits). For utilities crossing the proposed alignment, the two locations shall be on either side of the alignment. For utilities parallel to the proposed alignment, the two locations shall be up-station and down-station of the proposed alignment.

B. Settlement utility points shall consist of a measurement rod installed within a casing placed on the top surface of the utility being monitored. The rod shall rest firmly on the utility, and shall be centered in the annular space of the casing using centralizers.

C. Settlement utility points shall be surveyed according to the Drawings.

D. Settlement utility points shall be removed once trenchless activity beneath the active point has been complete for at least four weeks. Remove and dispose of rods and casings to a depth of at least three feet below the final ground surface. Backfill holes to be even with the surrounding surfaces.

3.05 FINISHING

A. The Contractor shall removal all construction debris, spoils, slurry, oil, grease, and other materials from the installed casing.

B. Installed casing will be subject to visual inspection by the Owner.

END OF SECTION

This page intentionally left blank.

TECHNICAL PROVISIONS

SECTION 02320

GUIDED AUGER BORING

PART 1 - GENERAL

1.01 SCOPE OF WORK

A. The work specified in this Section includes the requirements for steel casing installation using guided auger boring as designated in the Contract Documents.

B. This Section defines in general terms the work to be completed. The Contractor shall have sole responsibility for the means and methods utilized to install the casing to the line and grade shown on the Drawings and to prevent settlement, all within the tolerances specified herein and subject to review by the Engineer and Owner.

1.02 DEFINITIONS

A. Guidance System: A system which utilizes a LED target mounted behind the steerable bit of the pilot tube and a camera system to install the pilot tube to a specified line and grade.

B. Guided Auger Boring: A hybrid trenchless technique which utilizes a steerable pilot tube to guide the jacking of a casing pipe from a launch shaft to a receiving shaft. Excavation is carried out within the jacked casing using auger flights to transport the soils to the launch shaft. The casing is advanced using hydraulic jacks located in the launch shaft.

C. Launch Shaft: An excavation from which trenchless technology equipment is advanced.

D. Obstruction: Any object or feature which stops the forward progress of the bore.

E. Pilot Tube: A steerable tube with a slant-faced head which is rotated to control the direction of tube advancement from the launch shaft to the receiving shaft. Once installed, the pilot tube provides a centerline for the casing installation.

F. Receiving Shaft: An excavation into which trenchless technology equipment is advanced and recovered following the installation of the casing.

1.03 REFERENCE STANDARDS

A. American Society for Testing and Materials (ASTM)

1. ASTM A139 - Standard Specification for Electric-Fusion (Arc)-Welded Steel Pipe.

2. ASTM A53 - Standard Specification for Pipe, Steel, Black and Hot-Dipped, Zinc-Coated, Welded and Seamless.

3. ASTM C150 – Standard Specification for Portland Cement.

1.04 RELATED WORK

A. Launch and Receiving Shafts are included in Section 02310.

B. Dewatering and Drainage is included in Section 02140.

C. Installation of Pipe in Casing is included in Section 02350.

D. Pipeline Testing is included in Section 02660.

E. Environmental protection is included in Section 2960.

F. Noise and vibration is included in Section 01560.

1.05 QUALITY ASSURANCE

A. The surveyor responsible for line and grade control shall be a Licensed Surveyor registered in the State of California who has prior experience with similar projects.

B. Allowable Installation Tolerance: The maximum deviation at any point along the casing shall not exceed 2 inches from the line and/or grade shown on the Drawings.

C. Allowable Ground Surface Settlement: Ground surface settlement shall be controlled to the following tolerances:

1. One half (½) inch for all roadways.

2. One (1) inch within open space areas with no surface facilities.

D. Allowable Utility Settlement: Settlement of any utilities, shown on the Drawings or not, shall not exceed ½ inch.

E. The Contractor shall immediately notify the Owner, in writing, if any problems that would cause a schedule delay or a change to the submitted process/procedure are encountered with equipment or materials.

F. The Owner shall have full access to the launch and receiving shafts prior to, during, and following all guided auger boring operations. This shall include, but is not limited to, visual inspection of installed pilot tubes and casings, and verification of line and grade. The Contractor shall provide safe access in accordance with all safety regulations.

1.06 SUBMITTALS

A. All submittals shall be in accordance with the requirements given in Section 01300 – Submittals. All submittals requiring structural design shall be signed by a professional civil or structural engineer registered in the State of California. The submittals shall include the following:

1. Work Plan: The Contractor shall submit a Work Plan which includes the details of the pilot tube and casing installation as well as the sequence of operations that will be utilized during all phases of construction. The work plan shall also include the following:

   a. A detailed description of the equipment and procedures to be employed during guided auger boring operations. Provide manufacturer's literature describing in detail the pipe jacking system and pilot tube guidance system to be used. Describe method and capabilities for controlling ground conditions at the tunnel heading and preventing loss of ground. Provide calculations showing the estimated jacking force required to complete the installation, including details on the estimation method used to calculate jacking forces.

   b. Excavation procedures including details of auger flights, safety systems, face support capabilities, and steering provisions. Include details of provisions for supporting the face during auger boring and when auger boring operations are interrupted.

   c. Shop drawings for all equipment, equipment setup areas, and staging areas in addition to launch and receiving shafts and casing alignment.

   d. Thrust block and jacking frame design and details, including reaction transfer calculations.

   e. Details of the pipe lubrication system and description of pipe lubricants to be used during pipe jacking, including manufacture's literature and Material Safety Data Sheets.

   f. A spoils removal plan which includes the location and sequence of disposal.

   g. Dewatering procedures and groundwater control details during trenchless operations.

h. Material specifications and shop drawings of casing showing the pipe wall thickness, steel grade, and the maximum allowable axial force. A pipe certification of compliance shall be submitted.
i. Calculations demonstrating that the pipe selected has been designed to support the maximum anticipated earth loads and superimposed live loads, both static and dynamic, which may be imposed on the pipe.

j. A safety plan in accordance with Subsection 1.07 B.

2. A detailed and legible schedule of work, in addition to the requirements of Section 01310, which shall include, but not be limited to:

   a. Mobilization
   b. Site preparation
   c. Pilot tube installation
   d. Auger boring
   e. Grouting

3. Contingency Plan: The Contractor shall submit a proposed contingency plan for potential problems that may arise during guided auger boring operations. The contingency plan shall address the observations that would indicate a problem as well as the remediation methods to address it. The plan shall include the following scenarios:

   a. Obstruction encountered that is removable through the casing.
   b. Utility strike.
   c. Deviation from planned casing alignment that exceeds specified allowable limits.
   d. Inability to complete the pilot tube installation.
   e. Settlement in excess of provided tolerances.
   f. Jacking forces in excess of estimated maximums.

B. Daily Submittals: The following information shall be recorded during guided auger boring operations and submitted to the Owner on a daily basis. Information shall be submitted within 2 hours of completion of the daily events or shift change, whichever is more frequent.

1. Field drawings for recording as-built conditions. The drawings shall be marked with all field information and shall be properly dated. This set of drawings shall be kept up to date.

2. Log of the guided auger boring operations. At a minimum the log shall consist of the following:

   a. The date, and the starting and finishing time of the work.
   b. Line and grade deviations.

c. Thrust force, torque, and rate of advance.
d. Pipe lubricant used (in gallons) and pumping pressure.
e. Any problems encountered.

C. No work, including the set up of traffic controls for the launch or receiving shafts, shall be performed until the submittals required for this Section and all other sections related to the installation of casing and pipe through the casing have been accepted by the Engineer.

1.07 SAFETY

A. The Owner has obtained from the State of California, Department of Industrial Relations, Division of Occupational Safety and Health Administration (Cal/OSHA) an underground classification of "Potentially Gassy" for these crossings. The tunnel classification is included in Appendix C. The work shall be performed in conformance with all applicable federal, state, and local safety requirements.

B. The Contractor shall submit a detailed safety plan in accordance with Cal/OSHA standards, including provisions for lighting, ventilations and electrical systems safeguards.

1.08 DESIGN CRITERIA

A. Auger boring equipment shall be guided with a pilot tube for line and grade accuracy.

B. Control settlement to values show in Subsection 1.05.

PART 2 - PRODUCTS

2.01 MATERIALS

A. Steel casing shall:

1. Be new, smooth wall carbon steel pipe which conforms to ASTM Specification A139, Grade B.

2. Have the capacity to withstand the maximum jacking load anticipated with a safety factor of 1.5. The casing shall also be designed to withstand reasonably anticipated long-term soil and groundwater loads.

3. Have a minimum yield strength of 35,000 psi.

4. Casing diameter shall be as shown on the Drawings. Casing wall thickness shall be determined by the contractor but shall not be less than ½ inch. Casing lengths shall be determined by the Contractor.

5. Have a difference in roundness between the major and the minor outside diameters not exceeding 1% of the specified nominal outside diameter, or ¼ inch, whichever is less.

6. Have an outside circumference which is within 1% of the nominal circumference, or ½ inch, whichever is less.

7. Have a minimum allowable straightness deviation in any 10-foot length of 1/8 inch.

8. Be furnished with 1½ inch minimum diameter grout holes which conform to ASTM Specification A53, Schedule 40, with threaded plugs.

   a. Space holes regularly on 20-foot centers. Longitudinal spacing between grout holes may be decreased to provide more extensive grouting, but shall not exceed 20 feet.
   b. Grout holes shall be fitted with countersunk, full face, rubber gaskets to prevent infiltration of displaced earth during the jacking process.

B. Steel casing joints shall be (1) a pressure fit type (Permalok or equal), or (2) welded. Steel casing for welding shall be square cut with beveled ends, using a full-penetration butt weld.

C. Grout used for filling voids outside of the casing pipe shall:

1. Be Type V Portland Cement conforming to ASTM C150.

2. Contain at least 8 sacks of cement per cubic yard of mix.

3. Have a fineness modulus between 1.5 and 2.

Sieve Size	% Passing by Weight
No. 8	100
No. 16	95-100
No. 30	60-85
No. 50	20-50
No. 100	10-30
No. 200	0-5

4. Use Celebex 209X manufactured by Celtite, Inc. as fluidifier, or an approved equal.

5. Use other admixtures subject to acceptance of the Engineer.

6. Have a minimum compressive strength of 50 psi in 24 hours, 300 psi in 28 Calendar Days.

D. Lubrication shall consist of bentonite and/or polymers and potable water. Polymers shall be non-toxic and shall not be used until the MSDS is submitted and accepted by the Engineer.

2.02 EQUIPMENT

A. The Contractor shall use guided auger boring equipment specifically designed for excavating, transporting and separating the soil materials which could routinely be encountered or expected along the alignment of the proposed pipeline. Equipment shall:

1. Be designed to sustain any ground loads which may be imposed upon it as well as any loads imposed by the thrust jacks and steering mechanisms.

2. Minimize the loss of ground ahead of and around the excavated face.

3. Be steerable in both the vertical and horizontal directions to maintain line and grade within the specified tolerances.

4. Limit overcut of the cutting shoe to less than ½ inch larger on radius than the outside of the jacked casing.

5. Be capable of continuously monitoring the jacking pressure, the rate of advancement, and the distance jacked. Develop the jacking system with a uniform distribution of jacking forces on the end of the casing.

6. Provide a pipe lubrication injection system to inject lubricants around the outside of the casing as required to decrease jacking forces. Provide a suitable pressure gage on the lubrication supply line.

PART 3 – EXECUTION

3.01 GENERAL REQUIREMENTS

A. The Contractor shall not begin guided auger boring until the following conditions have been met:

1. Required submittals have been made and the Engineer has reviewed and accepted them.

2. Launch and receiving shaft excavation has been completed and supported in accordance with Section 02310 – Launch and Receiving Shafts.

3. Groundwater levels have been lowered 6 inches below the bottom of the shaft excavation.

B. The Contractor shall install casing between the limits indicated on the Drawings to the specified lines and grades. Utilize methods that include due regard for safety of workers, adjacent structures and improvements, utilities, and the public. Locate launch and receiving shafts generally as identified on the Drawings unless proposed otherwise in the Work Plan accepted by the Engineer.

C. The Contractor shall perform all work in accordance with the requirements of Cal/OSHA. Perform gas testing by a certified tester in accordance with Cal/OSHA requirements.

D. The Contractor shall furnish all necessary equipment, power, water, and utilities for excavation, pilot tube installation, pipe jacking, lubrication mixing and pumping, removal and disposal of spoils, grouting, and other associated work consistent with the methods of construction.

E. The Contractor shall conduct all operations such that trucks and other vehicles minimize dust or noise nuisance in the streets and adjacent properties.

F. The Contractor shall promptly clean up, remove, and dispose of any spoils or spillage in accordance with the spoils removal plan.

G. The Contractor shall perform all work so as not to disturb adjacent structures, roadways, or existing utilities. Immediately repair any damage to the satisfaction of the agency or utility having jurisdiction.

3.02 INSTALLATION

A. The Contractor shall use benchmarks to maintain lines and grades to establish the location of the pilot tube using a guidance system.

B. The Contractor shall submit to the Owner copies of field notes used to establish all lines and grades. The Contractor remains fully responsible for the accuracy of the installation.

C. During pilot tube installation, the Contractor shall use a laser to verify line and grade on a minimum of 50-foot intervals. During auger boring, the Contractor shall verify line and grade on a minimum of 20-foot intervals, or as directed by the Owner.

D. If the casing installation exceeds the specified tolerances, the Contractor is responsible for correcting the installation. All corrective work shall be performed as described in the accepted Contingency Plan at no additional cost to the Owner.

E. The Contractor shall use augers that are appropriately sized to the casing. Augers that are more than one standard pipe diameter size smaller than the casing will not be allowed. Augers shall remain within the casing pipe throughout excavation,

maintaining a soil plug within the casing at all times. Advancing the augers in front of the casing will not be allowed.

F. The Contractor shall jack casing into place without damaging the casing. In the event a casing section is damaged during the jacking operation, repair the casing, subject to approval by the Owner.

G. The Contractor shall provide groundwater control as required for proper execution of the Work in accordance with Section 02140 – Dewatering and Drainage.

H. The Contractor shall transport and dispose of all spoils properly. No stockpiling shall be permitted at the launch shaft sites. Only use the disposal sites identified in accepted submittals.

I. Obstruction removal is subject to the following requirements:

1. Notify the Owner immediately upon encountering an obstruction.

2. Upon written authorization by the Owner, proceed with removal of the obstruction in accordance with the Contractor's submitted obstruction removal plan.

3. The Contractor shall take all necessary steps to remove any obstruction or otherwise make it possible to continue boring operations.

4. All obstructions less than 1/3 the outer diameter of the pipe casing in the minimum dimension are the responsibility of the Contractor and will not be considered for additional payment.

5. Only obstructions larger than 1/3 the outer diameter of the pipe casing in the minimum dimension will be considered obstructions subject to this section.

   a. All costs associated with delay, removal, and continued boring for the first three obstructions larger than 1/3 the outer diameter of the pipe casing in the minimum dimension shall be the responsibility of the Contractor and shall be included in the base bid.

   b. Additional obstruction removal for the fourth obstruction and beyond of larger than 1/3 the outer diameter of the pipe casing in the minimum dimension will be paid at the amount given in Bid Item No. 44.

   c. The Contractor must produce the obstruction and allow visual observation by the Owner to be considered an obstruction subject to this section.

J. In the event the Contractor encounters a problem during the Work and the situation is not covered by the Contractor's Contingency Plan, the Contractor shall propose alternative solutions for Owner's acceptance.

K. All void space between the soil and the rammed casing shall be grouted immediately upon completion of the guided pipe ram.

3.03 INSTRUMENTATION AND MONITORING

A. All crossing utilities and all utilities located horizontally within 5 feet of the exterior of the casing shall be positively located prior to construction. Where positive location cannot be performed at the crossing location without obtaining additional permits (other than encroachment permits), positive location shall be accomplished at the nearest two locations where it can be performed without acquiring additional permits (other than encroachment permits). For utilities crossing the proposed alignment, the two locations shall be on either side of the alignment. For utilities parallel to the proposed alignment, the two locations shall be up-station and down-station of the proposed alignment.

B. Settlement utility points shall consist of a measurement rod installed within a casing placed on the top surface of the utility being monitored. The rod shall rest firmly on the utility, and shall be centered in the annular space of the casing using centralizers.

C. Settlement utility points shall be surveyed according to the Drawings.

D. Settlement utility points shall be removed once trenchless activity beneath the active point has been complete for at least four weeks. Remove and dispose of rods and casings to a depth of at least three feet below the final ground surface. Backfill holes to be even with the surrounding surfaces.

3.04 FINISHING

A. The Contractor shall removal all construction debris, spoils, slurry, oil, grease, and other materials from the installed casing.

B. Installed casing will be subject to visual inspection by the Owner.

END OF SECTION

TECHNICAL PROVISIONS

SECTION 02325

JACKED STEEL CASING

PART 1 - GENERAL

1.01 SCOPE OF WORK

A. Furnish all labor, material, tools, equipment and incidentals required to furnish and install jacked steel casing. This Section also includes the installation of the carrier pipe within the steel casing. Carrier pipe requirements are specified in other Sections.

1.02 RELATED WORK

A. Trenching, backfilling and compaction are included in Section 02220.

B. Cement-sand slurry is included in Section 02250.

C. Soil-cement is included in Section 02270.

D. Installation of pipe in casing is included in Section 02350.

E. Sheeting, shoring and bracing is included in Section 02400.

F. Large diameter PVC pipe and Fittings are included in Section 02620.

G. HDPE pipe and fittings are included in Section 02623.

1.03 SUBMITTALS

A. Submit to the Owner in accordance with Section 01300 the following:

1. Detailed shop drawings showing materials, properties and details of fabrication for steel casing.

2. Drawings, including plans, sections and pertinent details for casing, jacking pit, and receiving pit.

3. Calculations and drawings for jacking and receiving pit sheeting, shoring and bracings.

4. Detailed plan and description of jacking operation and equipment to be used including jacking head.
5. Data for materials and mix design for pressure grout.

6. Data for materials and mix design for cement-sand slurry.

7. HAZWOPER training certifications for all personnel working on site in conjunction with the work in this section.

B. Submittal for bracings, jacking operation and jacking equipment will be reviewed for general requirements and filed for records. Review of these submittals in no way relieves the Contractor of the responsibility for making a satisfactory installation meeting the requirements of the Contract Documents.

1.04 REFERENCE STANDARDS

A. American Society for Testing and Materials (ASTM)

1. ASTM A36 - Specification for Carbon Structural Steel

2. ASTM A53 - Standard Specification for Pipe, Steel, Black and Hot-Dipped, Zinc-Coated, Welded and Seamless

3. ASTM A139 - Specification for Electric-Fusion (Arc)-Welded Steel Pipe (NPS 4-in and over).

4. ASTM 234 - Specification for Pipe Fittings for Wrought Carbon Steel and Alloy Steel for Moderate and Elevated Temperatures.

5. ASTM A283 - Specification for Low and Intermediate Tensile Strength Carbon Steel Plates.

6. ASTM A570 - Specification for Steel, Sheet and Strip, Carbon, Hot-Rolled, Structural Quality.

7. ASTM A572 - Specification for High-Strength Low-Alloy Columbium-Vanadium Structural Steel.

8. ASTM A907 - Specification for Steel, Sheet and Strip, Heavy Thickness Coils, Carbon, Hot-rolled, Structural Quality

9. ASTM C150 - Specification for Portland Cement.

B. American Water Works Association (AWWA)

1. AWWA C200 - Steel Water Pipe – 6 in. (150 mm) and Larger

1.05 PRE-JOB MEETING

A. The Contractor shall arrange a mandatory pre-job meeting with the Department of Industrial Relations (DIR) prior to start of any field work for the jacked casing. Refer to Special Condition No. 1-26 for additional information and requirements.

1.06 HAZWOPER TRAINING

A. All sub-contractor and Contractor personnel working on site in conjunction with the jacking and boring work shall have 40-hour HAZWOPER training. This training shall meet certification requirements pursuant to 49 CFR, 29CFR 1910.120, Title 8-CCR, and Title 13-CCR. Certifications shall be current and cover the anticipated jacking-boring schedule.

SAFETY

A. The Owner has obtained from the State of California, Department of Industrial Relations, Division of Occupational Safety and Health Administration (Cal/OSHA) an underground classification of "Potentially Gassy" for these crossings. The tunnel classification is included in Appendix C. The work shall be performed in conformance with all applicable federal, state, and local safety requirements.

B. The Contractor shall submit a detailed safety plan in accordance with Cal/OSHA standards, including provisions for lighting, ventilations and electrical systems safeguards.

PART 2 - PRODUCTS

2.01 MATERIALS

A. Steel casing shall be fabricated from steel sheets, plates or coils in accordance with AWWA C200, Section 4. The steel sheets shall conform to ASTM A36 or ASTM A570 Grade 33, 36 or 40, plates shall conform to ASTM A283 grade C or D or ASTM A572 Grade 42 or coil shall conform to the requirements of ASTM A139 Grades B or C. All welded seams, whether straight or spiral, shall be butt welded using an approved electric-fusion weld process.

B. Steel for cylinders shall additionally have a maximum carbon content of 0.25 percent and a minimum elongation of 22 percent in a 2-inch gauge length. Steel cylinders shall have butt welded longitudinal and girth welds, whether straight or spiral, and shall be welded with an approved electric fusion weld process.

C. Steel casing shall have smooth surfaces free from cracks, crazing and roughness.

D. Steel casings shall be furnished in required lengths to provide total length of steel casing as shown on drawings. If more than one piece of steel casing is required, they shall be butt-welded to provide a continuous steel casing.

E. Diameter and thickness of steel casing shall be as shown on Drawings. Thickness of steel casing shall not be less than ¾-inch unless otherwise shown.

PART 3 - EXECUTION

3.01 INSTALLATION

A. At locations indicated, the main line pipe shall be installed within the jacked casing.

B. Casing Installation.

1. Casing installations shall be performed by methods that will result in a minimum of overbreak during excavation and that will provide accurate alignment and grade for the pipe to be installed therein.

2. The approach trench for jacking operations shall be adequately anchored to safeguard existing structures and surface improvements, maintain traffic and to insure against ground movement in the vicinity of the jack supports. Jacking will not be allowed to proceed unless the work area has been dewatered producing an "in the dry" working condition with the water table maintained at least 6 inches below the bottom of excavation.

3. Heavy guide timbers of sufficient length to provide accurate control of jacking alignment shall be placed in the trench and firmly bedded to the required line and grade. The jack support shall consist of an adequately anchored structure of heavy timbers so placed to permit the insertion of the lengths of casing to be jacked and to insure action of the jacks in line with the axis of the casing.

4. Between the jacks and the end of the casing to which pressure is applied shall be interposed a bearing block consisting of a timber framework so constructed as to provide uniform end bearing over the entire perimeter of the casing and having sufficient strength to distribute the jacking pressure evenly thereon.

5. Application of jacking pressure and excavation of material ahead of the casing as it advances shall be carefully controlled to prevent the casing from becoming earthbound or deviating from required line and grade. Excavation of material shall be restricted to the least clearance to prevent binding.

6. The leading section of conduit shall be equipped with a jacking head securely anchored thereto to prevent any wobble or alignment variation during jacking operations. Excavation shall be carried out entirely within the jacking head and no excavation in advance thereof will be permitted. Every effort shall be made to avoid any loss of earth outside of the jacking head. Excavated material shall be removed from the conduit as excavation progresses, and no accumulation of such material within the conduit will be permitted.

7. After the jacked casing is brought to final position and prior to installation therein of the carrier pipe, the void spaces surrounding the casing shall be completely filled with pressure grout. Pressure grout for filling voids shall be low pressure, approximately 10 psi, except in cases of large cave-ins or voids, higher pressure may be required. Neat cement grout shall be used except that large voids shall be filled with grout containing sand. The quantity of water in grout shall be the minimum required to produce a mixture sufficiently workable and properly placed for the purpose intended.

3.02 BACKFILL

A. After installation of the casing carrier pipe and pipe within pits is completed, backfill pits using cement-sand slurry in accordance with Section 02250.

END OF SECTION

This page intentionally left blank.

TECHNICAL PROVISIONS

SECTION 02350

INSTALLATION OF PIPE IN CASING

PART 1 - GENERAL

1.01 SCOPE OF WORK

A. Perform the work required to install all piping shown, specified and required to provide for the construction of a complete and operable welded steel pipeline within the steel casing installed by auger boring or pipe ramming. Also, perform the work required to prepare the pipeline for blown sand backfilling of the annular space without deformation or migration of the carrier pipe from the specified line and grade.

1.02 RELATED AND/OR REFERENCED SECTIONS

A. Sand is included in Section 02230.

B. Guided Auger Boring is included in Section 02320.

C. Guided Pipe Ramming is included in Section 02315.

D. Jacked Steel Casing is included in Section 02325.

E. Launch and Receiving Shafts are included in Section 02310.

F. Steel Pipe and Fittings are included in Section 02620.

1.03 SUBMITTALS

A. Submit the following in accordance with Section 01300, Submittals.

1. Shop Drawings: Detailed fabrication shop drawings of pipe to be installed. These drawings shall be prepared and sealed by a Civil Engineer registered in the State of California Include the following installation information:

   a. Methods of controlling groundwater inflows in the tunnel including panning, drainage, vent pipe, and drain pipe details.

   b. Methods of grade control.

   c. Pipe installation procedure showing that the limits of the minimum bending radius are not exceeded during installation. Demonstrate those proper

clearances for pipe installation exists. Actual bending radius shall not exceed the limits as specified in Section 02620.

d. Submit details for installing and backfilling the pipe in the tunnel. Provide drawings indicating rails, concrete invert, blown sand placement pipes, and drain lines. Describe methods and equipment for joining and testing pipe, installing pipe in the shaft and tunnel, securing it in place, and placing backfill around pipe.

e. Calculated volume of blown sand to be placed in the annular space between the carrier pipe and the steel casing.

2. Installer's Qualifications: Description of experience demonstrating similar type of pipe installation in tunnels. Submit project name and details, contract, and telephone number for three projects completed within the last 5 years.

PART 2 - PRODUCTS (NOT USED)

PART 3 - EXECUTION

3.01 WORK PREPARATION

A. Prior to installation of pipe, the Contractor shall allow the Owner to review tunnel and shafts initial support. The Contractor shall not commence installation of the pipe until the Owner has favorably reviewed the tunnel and shaft support.

B. Once the Contractor has finally installed and prepared the casing to receive the carrier pipe, the Contractor shall notify the Owner such that the Owner may perform an inspection to ensure the casing is free from irregularities in roundness, casing welding irregularities, and misaligned casing joints. These deficiencies shall be corrected by the Contractor and reviewed by the Owner prior to the installation of the carrier pipe. Notification to the Owner must be sufficiently ahead of the scheduled pipe installation to allow for any required repairs or adjustments.

C. Pipe installation shall not commence until the Contractor verifies that the tunnel and shaft excavation has been stabilized and that all deformations of the initial supports have been successfully controlled and reviewed by the Engineer.

D. Install temporary drainage pipes and panning to control water infiltration that will be detrimental to the placement of sand or backfill and any piping required for air vents for the drainage and panning elements. When no longer needed, these drains shall be grouted after the installation of pipe and backfill.

E. All voids outside the steel casing shall be filled with grout prior to installation of the pipelines in the tunnels as required by the Engineer.

F. Clean up of the tunnel and shaft shall be complete prior to pipe installation. Clean up shall include the removal of all loose, disturbed soil or rock and standing water in the steel casing invert and shaft sidewalls.

G. Pipe installation shall not commence until the Owner confirms, in writing, that tunnel preparation and clean-up have been properly completed.

3.02 GENERAL REQUIREMENTS

A. Tolerances: Allowable rate of change in line and grade of carrier pipe shall conform to the requirements of Sections 02315, 02320, and 02325, as appropriate.

B. Surveys: Survey line and grade of invert prior to and after annular space backfill.

C. Tunnel groundwater inflows shall be controlled by means of cutoff grouting, installing drain pipes, panning, backdrains, underdrains, invert drains, channeling, pumping, or other means reviewed by the Engineer. Any drains installed shall be connected to grout pipes so that they can be contact grouted after placement of backfill. Tunnel groundwater inflows shall be handled, treated, and disposed of in accordance with Section 02140, Dewatering and Drainage.

D. The pipe shall be installed in the tunnel and shaft as indicated on the Drawings and accepted submittals for pipe installation. The pipe shall be installed without sliding or dragging in a manner that would damage the pipe. Any damage to the pipe during transport and installation, for any reason, shall be repaired to the satisfaction of the Engineer or replaced with a new section of pipe at no additional expense to the Owner.

E. The sections of pipe installed in the tunnel shall be placed to the required line and grade while maintaining the ability to install the blown sand and without encroaching on the spacers used between the pipe and the casing as indicated on the Drawings.

F. The pipeline segment shall be supported continuously to prevent settlement, lateral or axial movement of the pipe during placement of blown sand backfill.

G. Skids and/or spacers shall be spaced minimally as shown on the Drawings and additionally as required to prevent sagging or horizontal misalignment of the pipe during and after installation in the casing.

3.03 INSTALLATION OF PIPE IN TUNNELS AND SHAFTS

A. Care shall be taken to prevent the pipe from being in any way subjected to heavy shocks or damage.

B. The use of dogs or equivalent devices welded to the pipe for the purpose of forcing it into position will not be permitted.

C. After contact grouting, pipe installation, and blown sand backfill are complete, inspect pipe for damage and repair any damage to the pipe at no additional cost to the Owner. Repair methods shall be submitted to the Engineer for review and acceptance prior to performing the repairs.

3.04 FILLING OF ANNULAR SPACE

A. Sand used to fill the annular space between the pipe and casing shall be carefully measured during placement to ensure the calculated amount required to fill the annular space is being placed.

B. The Contractor shall devise a system for the placement of blown sand such that if the blown sand is not being placed properly, the Contractor and Owner will be able to detect such a problem. An example system would be the placement of a PVC pipe attached to the inside of the casing which is then drawn out at a predetermined rate as a measured quantity of sand adequate to fill the annular space at that rate is blown into the annular space. Filling of annular space from a stationary port or pipe from one side of the casing will not be allowed.

C. Should the rate of blown sand to fill the annular space not match the required volume of fill between the casing and the carrier pipe during installation, the Contractor shall stop filling the annular space and rectify the problem. If the Contractor cannot rectify the problem with the carrier pipe in place, then he may be required to remove the pipe and reinstall with a new or repaired system to complete the blown sand installation.

END OF SECTION

TECHNICAL PROVISIONS

SECTION 02400

SHEETING, SHORING AND BRACING

PART 1 - GENERAL

1.01 WORK OF THIS SECTION

A. Provide protective installation consisting of sheeting, shoring, bracing, piling, wales, anchorages and fastenings, or equivalent system for protection of workers and the Work.

B. This Section is intended to be general in scope and is applicable to all work of this Contract, including principally the following items as may be required in the performance of the Work:

1. Sheeting, shoring and bracing for trenches.

2. Sheeting, shoring and bracing for structural excavation.

C. Federal, state and local requirements for safety of public, workers, and property shall apply to work under this Section.

1.02 STATUTORY REQUIREMENTS

A. The work of this Section shall comply with current versions, with revisions, of the Construction Safety Orders, Division of Industrial Safety, State of California.

B. The Contractor shall comply with the provisions for "Shoring and Bracing Drawings" in Section 6705 of the California Labor Code. The Contractor, prior to beginning any trench or structure excavation 5 feet deep or greater, shall submit to the Engineer and shall be in possession of the Engineer's written acceptance for record of the Contractor's detailed plan showing design of all shoring, bracing, sloping of the sides of all excavations, or other provisions for worker protection against the hazard of caving ground during the excavation of such trenches or structure excavation. If such plan varies from the shoring system established in the Construction Safety Orders of the State of California, such alternative system plans shall be prepared, signed, and stamped by a Civil or Structural Engineer licensed in the State of California.

1.03 RELATED WORK

A. Dewatering and Drainage are included in Section 02140.

B. Earthwork is included in Section 02200.

C. Trenching, Backfilling and Compaction are included in Section 02220.

1.04 QUALITY ASSURANCE

A. Conform to the requirements of California Code of Regulations, Title 8, Division 1, Chapter 4.

B. Conform to the requirements of Section 6705, California Labor Code, Shoring and Bracing Drawings.

1.05 SUBMITTALS

A. Prior to commencing work involving sheeting, shoring and bracing, the Contractor shall submit to the Engineer for record, in accordance with Section 01300 and herein specified design drawings and supporting data as accepted by the CAL/OSHA. Submittals for sheeting, shoring, bracing shall be submitted for record purposes only. Contractor shall remain responsible for adequacy and safety of construction means, methods, and techniques.

1. The Contractor shall employ a California registered Civil Engineer to prepare, stamp seal, and sign design drawings and supporting data including calculations and specifications for the trench and excavation sheeting, shoring and bracing or equivalent systems including all components to be used for the performance of the Work.

2. Contractor and the engineer employed by him shall submit design drawings and supporting data to CAL/OSHA pursuant to the California Code of Regulations, Title 8, Chapter 3.2, Article 2, Section 341 for review and shall make such additions and modifications as are required for Division acceptance.

B. Prior to commencing work, submit certificates of all certified "Competent Persons" who will have the responsibilities described in Paragraph 3.01.I.

C. Prior to delivery of any mainline pipe to the project site or the Contractor's storage yard, submit general procedure of sheeting, shoring and bracing installation and removal which demonstrates the use of non-vibratory equipment as described in Paragraph 3.01.C of this Section.

PART 2 - PRODUCTS

2.01 MATERIALS

A. Use new or used materials complying with provisions of the approved sheeting, shoring and bracing design drawings. Materials shall be free from defects and damage that might in any way impair their protective function. Wood materials shall be pressure treated and be suitable for the application.

PART 3 - EXECUTION

3.01 INSTALLATION

A. Furnish, install, monitor and maintain excavation support (e.g., shoring, sheeting, bracing, trench boxes) as required by federal, state or local laws, ordinances, regulations and safety requirements and as required to perform the Work within excavation limits indicated. Support the sides of excavation, to prevent any movement which could in any way reduce the width of the excavation below that necessary for proper construction and protect adjacent structures and pavement from undermining, settlement or other damage. Take care to prevent the formation of voids outside of excavation supports. If voids do occur, immediately backfill and compact the voids with soil-cement, cement-soil slurry, or cement-sand slurry as approved by the Owner. Voids in locations that cannot be properly compacted upon backfilling shall be filled with lean concrete, cement-soil slurry, or cement sand-slurry as approved by the Owner.

B. Prior to the start of excavation or shoring installation, dewatering of the construction area must be completed per Section 02140.

C. Utilize shoring installation and removal methods that will not cause damage to adjacent structures, homes, or businesses. The use of low or high frequency vibration to install or remove shoring or shoring components will not be allowed. High impact driven piles will also not be allowed.

D. Abut members to exclude groundwater and fines, preventing the erosion of voids outside sheeting. In soft, wet ground, push sheeting to a lower level as excavation progresses so that sheeting is embedded in undisturbed earth. Install supports at close intervals so as to prevent displacement of the surrounding earth and to maintain safe conditions in the work area. Any damage shall be the responsibility of the Contractor.

E. Install excavation supports outside the neat lines of foundations. Supports shall be plumb and securely braced and tied in position. Excavation support shall be adequate to withstand all pressures to which the supports will be subjected. Any movement or bulging of supports shall be corrected to provide the necessary clearances, dimensions and structural integrity.

F. Withdraw individual members alternately as the backfill is raised, maintaining sufficient sheeting, shoring and bracing to protect the Work, workmen, adjacent structures, vehicular traffic, utilities or property. Remove bracing completely. Alternatively, thin sectioned shoring such as sheet piles may be removed following completion of backfill. If shoring is to be removed following backfill, then the Contractor must verify that there are no voids behind the shoring which will remain after the shoring is removed.

G. All voids left or caused by withdrawal of supports shall be immediately filled with cement-sand slurry, cement-soil slurry, or soil-cement and compacted.

H. Excavation Supports Left in Place

1. Only where unstable conditions occur in the underlying strata from any cause, and withdrawal of sheeting will endanger the Work, a portion of the sheeting, including bracing, may be left in place as indicated on the Drawings or with written approval of the Owner. Remove all wood within a zone extending four (4) feet below finished grade. The Contractor shall not regularly install a trench shoring system that will leave excavation supports in place.

2. The Owner or Engineer may direct that certain excavation supports remain in place, or be cut off at any specific elevation. Supports directed by the Owner or Engineer to be left in place and not so designated in the Contract Documents to remain in place, will be paid for in accordance with applicable article(s) in the General Conditions. If the Contractor believes that such a directive would entitle Contractor to Extra Work, the Contractor shall notify the Owner in accordance with the applicable article(s) in the General Conditions pertaining to changes in the Work.

3. The right of the Owner or Engineer to direct that certain excavation supports remain in place shall not be construed as creating any obligation on the Owner or Engineer to give such direction, nor shall failure to give such direction relieve the Contractor from liability for damages to persons or property occurring from or upon the Work occasioned by negligence or otherwise, growing out of a failure on the part of the Contractor to leave in place sufficient excavation supports to prevent any movement of the ground or damage to adjacent structures.

I. The Contractor shall at all times during excavation, sheeting, shoring and bracing operations have a certified "Competent Person" on site to observe and direct the safe and proper installation of all work covered in this Section.

J. The Contractor shall install the sheeting, shoring and bracing as shown on his/her submitted calculations. No substitute sheeting, shoring or bracing will be allowed unless it is at a minimum in conformance with the requirements of CAL/OSHA and submitted and accepted by the Engineer (not reviewed).

END OF SECTION

TECHNICAL PROVISIONS

SECTION 02510

TEMPORARY PAVEMENT

PART 1 - GENERAL

1.01 SCOPE OF WORK

A. Furnish all labor, materials, equipment and incidentals required to install and remove temporary pavement.

B. This section is intended to be in general in scope and is applicable to all work of this Contract, including the following:

1. Paving for temporary pavement extensions required to perform traffic control shown on the Drawings.

2. Maintenance of temporary AC.

C. Wherever sidewalks and driveways have been removed for purposes of construction, the Contractor shall place suitable asphalt concrete temporary sidewalks and driveways, as approved by the agency having jurisdiction, promptly after backfilling and shall maintain said temporary sidewalks and driveways in satisfactory condition until the final restoration of such improvements is made.

1.02 RELATED WORK

A. Dewatering and Drainage is included in Section 02140.

B. Earthwork is included in Section 02200.

C. Trenching, Backfilling and Compaction are included in Section 02220.

D. Asphalt Concrete Pavement and Base are included in Section 02512.

1.03 SUBMITTAL

A. Submit to the Engineer in Conformance with Section 01300:

1. A certified test report for liquid asphalt, aggregate materials, gradation and quality.

PART 2 - PRODUCTS

2.01 MATERIALS

A. Liquid Asphalt: Liquid asphalt shall be slow curing Grade SC 800 conforming to requirements of the California Department of Transportation Standard Specifications or SSPWC, Section 203-2.4.

B. Asphalt Concrete Mixture: Asphalt concrete shall be PG 64-10. The grading of the combined aggregates and the percentage of asphalt binder (liquid asphalt) shall conform to Class B mixture as specified in SSPWC, Section 203-6.4.3.

PART 3 - EXECUTION

3.01 INSTALLATION

A. Temporary paving shall conform to the requirements of Section 306-1.5 of the Standard Specifications for Public Works Construction.

B. Temporary Paving for Pavement Extensions: The Contractor shall excavate as necessary and place temporary pavement as required to maintain the traffic control as shown on the Drawings and as specified.

C. Thickness of temporary AC for roadways, sidewalks, driveways, etc. shall not be less than 4 inches.

D. Preparation of Surface. Prior to placing temporary pavement, existing surface shall be smooth, firm and at the grade as specified.

E. Place and compact approved mixture of temporary pavement materials in lifts not exceeding 3 inches. Total thickness shall be as specified on the Drawings or as required to match the adjacent finished grade.

F. Temporary pavement shall be brought up to the same level as existing pavement where abutting existing pavement, providing a smooth transition between the new and existing pavements.

G. Compaction shall be performed using steel wheel roller(s), vibratory roller(s), pneumatic roller(s) or other approved rolling methods.

H. Temporary pavement shall be firm, uniform and not cause discomfort to the traveling public. If in the opinion of the Owner and/or agency having jurisdiction, the temporary pavement does not provide an adequate level of comfort to the traveling public, the Contractor shall immediately adjust the temporary pavement profile, including any restriping necessary to perform the work, to the satisfaction of the Owner and/or

agency having jurisdiction. This adjustment shall be performed at no extra cost to the Owner.

I. Cost for temporary paving shall be included in the Contract Amount for the Work, and no extra compensation will be made to the Contractor

3.02 MAINTENANCE

A. All loose or weak temporary pavement materials shall be cleaned from the area periodically and replaced or repaired as necessary as directed by the Owner.

B. Irregularities which form on the temporary pavement after placement shall be immediately repaired by the Contractor.

C. At the discretion of the Owner and/or the agency having jurisdiction, the Contractor may be directed to repair or replace portions of temporary pavement which becomes unsatisfactory for any reason whatsoever. This repair work shall be performed immediately. This repair or replacement of temporary pavement shall be performed at no additional cost to the Owner.

END OF SECTION

This page intentionally left blank.

TECHNICAL PROVISIONS

SECTION 02512

ASPHALT CONCRETE PAVEMENT AND BASE

PART 1 - GENERAL

1.01 SCOPE OF WORK

A. Provide materials and installation of asphalt concrete pavement, base and asphalt concrete overlay within public rights of way.

B. This section is intended to be general in scope and is applicable to all work of this Contract, including principally the following items as may be required in the performance of the Work:

1. Restoration of ground surface over trenches.

2. Restoration or addition of pavement disturbed by the Contractor during his course of work or as directed.

3. Installation of new asphalt overlay as specified in the Contract Documents.

4. Installation of new asphalt concrete as specified in the Contract Documents.

C. All streets and highway surface improvements excavated or damaged by the Contractor shall be restored by him in accordance with the requirements of these Specifications and the agency having jurisdiction, and shall be subject to inspection and approval by the Owner and the agency having jurisdiction. All driveways and other facilities damaged by the Contractor and not under the jurisdiction of a public authority shall be repaired or replaced in kind by the Contractor at no additional cost to Owner.

1.02 RELATED WORK

A. Earthwork is included in Section 02200.

B. Trenching, Backfilling and Compaction are included in Section 02220.

C. Granular and Rock Materials are included in Section 02230.

D. Temporary Pavement is included in Section 02510.

E. Pavement Striping and Markings are included in Section 02525.

1.03 REFERENCE DOCUMENTS

A. Asphalt Concrete. Materials and workmanship shall conform to the requirements of Section 39 of the California Department of Transportation Standard Specifications.

B. Asphalt shall conform to the requirements of Section 92 of the California Department of Transportation Standard Specifications.

C. Asphaltic emulsion for seal coat (fog seal coat) shall conform to the requirements of Section 37 of the California Department of Transportation Standard Specifications.

D. Asphaltic emulsion for paint binder (tack coat) shall conform to the requirements of Section 94 of the California Department of Transportation Standard Specifications.

E. Aggregate Base. Materials, spreading and compaction shall conform to Section 26 of California Department of Transportation Standard Specifications.

F. Reference documents specified by governing agency having jurisdiction, if additionally restrictive, shall be used, where applicable.

1.04 REFERENCE STANDARDS

A. American Society for Testing and Materials (ASTM)

1. ASTM C117 - Standard Test Method for Materials Finer than 75-µm (No. 200) Sieve in Mineral Aggregates by Washing

2. ASTM C136 - Standard Test Method for Sieve Analysis of Fine and Coarse Aggregates

3. ASTM D6307 - Standard Test Method for Asphalt Content of Hot-Mix Asphalt by Ignition Method

1.05 SUBMITTALS

A. Submit to the Engineer in conformance with Section 01300:

1. Aggregate base material gradation.

2. Paving fabric manufacturer's catalog cut sheet and technical information.

3. Test reports for asphalt concrete and base materials, gradation and quality. Submit for each material to be incorporated into the Work.

4. At the time of delivery of each shipment of asphalt, the vendor supplying the material will deliver to the purchaser certified copies of the test report. The test report shall indicate the name of the vendor, type and grade of asphalt delivered, date and point of delivery, quantity delivered, delivery ticket number, purchase number, and results of the specified tests.

1.06 TRAFFIC CONTROL

A. Not all traffic controls required for the placement of AC pavement is shown on the Drawings. The Contractor shall provide temporary traffic controls required to perform the work of this Section as required by the governing agency.

B. Implementation of a traffic control method not shown on the Drawings will require the Contractor to prepare and submit traffic control plans as required to the Engineer and governing agency for approval in accordance with Section 13520. No work shall be performed until approval from the Engineer, Owner, and governing agency is acquired.

1.07 NOTIFICATION

A. The Contractor shall notify the governing agency and Owner in writing at least 2 Working Days in advance of the commencement of paving work.

B. For placement of overlay, the Contractor shall notify the Owner and agency having jurisdiction for inspection at the following times:

1. Completion of cold milling operation
2. Completion of surface preparation prior to application of tack coat
3. Completion of tack coat application
4. Completion of paving operations

1.08 PRODUCT HANDLING

A. Protection

1. Use all means necessary to protect bituminous concrete pavement materials before, during and after installation and to protect the installed work and materials of all other trades.

2. Paving materials delivered to the Site prior to placement shall be stockpiled in such a manner as to minimize surface water impact on the stockpile and minimize intrusion of soils adjacent to and beneath the stockpile.

B. Replacements

1. In the event of damage, immediately make all repairs and replacements necessary to the satisfaction of the Owner and agency having jurisdiction and at no additional cost to the Owner.

PART 2 - PRODUCTS

2.01 MATERIALS

A. Aggregate Base material shall be State of California Department of Transportation Standard Specification Section 26-1.02A Class 2 aggregate base, 3/4-inch gradation. Processed miscellaneous base material conforming to Standard Specifications for Public Works Construction Section 200-2.5, fine gradation shall be an acceptable alternative aggregate base material.

B. Rubberized Asphalt Concrete. Rubberized asphalt concrete pavement overlay shall be ARHM-GG-C asphalt concrete in accordance with Section 203-11 of the Standard Specifications for Public Works Construction. Asphalt shall be PG-64-16. Gradation of aggregate and asphalt content of the mix shall be such that smooth dense finished surface is produced. Unless otherwise shown on the Drawings, or as required by the agency having jurisdiction, the thickness of asphalt concrete excluding overlay shall be 4 inches and the thickness of asphalt concrete overlay shall be 1.5 inches.

C. Conventional Asphalt Concrete. Class of asphalt concrete (conventional asphalt concrete) shall be as indicated below. The Contractor shall use a PG-64-10 asphalt binder with aggregate class as shown for each agency. Gradation of aggregate and asphalt content of the mix shall be such that smooth dense finished surface is produced. Unless otherwise shown on the Drawings, or as required by the agency having jurisdiction, the thickness of asphalt concrete excluding overlay shall be 4 inches and the thickness of asphalt concrete overlay shall be 1.5 inches.

D. Asphaltic emulsions shall be composed of a bituminous material uniformly emulsified with water and an emulsifying or stabilizing agent. Polymer modified asphaltic emulsion shall also contain a polymer.

E. Paving Fabric. Paving fabric shall be a thermoplastic non-woven fiber, resistant to mildew, rot and chemical attack. Paving fabric shall be Petromat Style No. 4599 as manufactured by Propex Fabrics, Inc. or an approved equivalent. Paving fabric shall not be used under rubberized asphalt concrete.

F. Rock Dust Blotter. Rock dust blotter shall be in accordance with Section 200.1.2 of the SSPWC.

G. Asphalt Rubber Aggregate Membrane (ARAM). ARAM interlayer shall comply with the requirements set forth in Section 203-12 of the SSPWC.

H. Reclaimed Asphalt Pavement Slurry Seal.

1. The ingredients of the slurry mixture shall conform to the following:

   Bituminous Material: Shall be cationic quickset emulsified asphalt-type PMCQS-1h or an approved equivalent, meeting the following requirements:

Emulsion Properties	**ASTM**	**Limits**
Viscosity @ 77 deg. F., Saybolt Furol	D-244	20-100 sec.
Residue by distillation	D-244	57% min.
Sieve test, retained on 20 mesh	D-244	0.10% max.
Particle charge, electroplate		Positive

Residue Properties	**ASTM**	**Limits**
Penetration @ 77 deg. F.	D-5	40- 90 sec.
Solubility in Trichlorethylene	D-2042	97.5% min.
Ductility @ 77 deg. F.	D-113	40 cm min.
Torsional Recovery, %, min.	CA332	18 – 22

   The asphaltic emulsion shall have 2-1/2% latex additive by weight.

2. The retardant shall be of a type that will prevent slurry mix from setting up prematurely in the spreader box and to ensure the applied slurry mix can support vehicular traffic within 60 minutes after the last application. A retardant, when used, shall be in liquid form when added to the slurry mix in the mixing chamber of the continuous mixer.

3. RAP Aggregate: Shall consist of sound, durable milled and/or crushed reclaimed pavement. The material shall be free from vegetable matter, loop wires, paving fabric, crushed concrete, brick and other deleterious substances. When tested in accordance with ASTM C136 and ASTM C117, the percentage composition by weight of the RAP shall conform to the following grading:

RAP Gradation of Aggregates

Sieve Size	Percent Passing 1	**Percent Passing 2**
3/8" (9.5 mm)	**100**	100
No. 4 (4.75 mm)	**95 - 100**	95 - 100
No. 8 (2.36 mm)	**65 – 85**	70 - 90
No. 16 (1.18 mm)	**35 – 60**	50 – 75
No. 30 (600 um)	**18 - 38**	35 – 55
No. 50 (330 um)	**8 - 25**	22 – 40
No. 100 (150 um)	**5 - 20**	13 – 38
No. 200 (75 um)	**2 - 12**	1-0 -20
Residual Asphalt Content		6.5% Min.(based on dry aggregate weight)
1. On unextracted RAP	2. On extracted RAP	3. Determined by Binder Ignition ASTM 6307

The aggregate, as finally selected, shall have a gradation within the limits designated in the above table and should not vary from the low limit on one sieve to the high-limit on one sieve to the high-limit on the adjacent sieve and vice versa.

4. Sufficient water must be used to obtain a mix consistency that is smooth and homogeneous and does not segregate on standing or before the slurry seal is placed on the pavement.

PART 3 - EXECUTION

3.01 INSTALLATION

A. Cutting or Breaking Paved Surfaces

1. In cutting or breaking up street and roadway surfacing including asphalt and concrete pavement, the Contractor shall not use equipment which will injure or endanger nearby improvements of any type.

2. All Portland cement and asphaltic concrete pavements, gutters, driveways, curbs and sidewalks excavated or damaged shall be removed between neat vertical cuts made with a saw designed for such work. In the case of curbs, gutters and sidewalks, cuts shall be made at the nearest score marks beyond the damaged portion, as may be required in each case by the governing agency. In the event a joint or scoring line does not exist or that such joint is three feet or more from the removed or damaged portion, the existing concrete shall be removed and reconstructed to neat, plane faces.

3. All pavement sawcuts shall be neat and straight to provide an unfractured and level pavement joint for bonding existing surfacing with pavement replacement. All cut

edges shall provide clean, solid, vertical faces free from all loose material. Where large irregular surfaces are removed, such trimming or cutting as hereinafter provided, shall be parallel or at right angles to the road centerline.

4. In excavation areas, pavement shall be removed a minimum of 12 inches beyond excavation or as required by the agency having jurisdiction.

5. All existing crushed aggregate and asphaltic concrete removed shall be hauled away from the Site and legally disposed of by the Contractor.

B. Surface Facilities

1. All surface facilities such as monument wells, valve boxes, manhole covers, meter covers, cleanouts, etc. shall be protected from damage during pavement removal or restoration. Any such item damaged or destroyed shall be replaced in kind or repaired to the satisfaction of the agency having jurisdiction.

2. Prior to the start of cold milling for application of asphalt overlay, surface facilities shall be either removed and underlying facility protected or frames and covers be lowered 6 inches below finished grade.

C. Subgrade Preparation

1. Subgrade for pavement or other roadway structures shall not vary more than 0.02 foot from the specified grade and cross-section.

D. Pavement Restoration

1. In all existing pavement areas where the surface is removed, broken or damaged by equipment or in which the ground has caved in or settled due to the installation of the improvements, the surface shall be restored to the original grade by the Contractor. Prior to resurfacing, the existing surfacing shall be removed as specified herein. All broken and jagged edges of the pavement edge shall be sawed straight. Areas to be cut shall be indicated by the Owner and no permanent pavement shall be placed until these edges have been sawed. If during the initial removal of the existing pavement a method of removal was used which disturbed the adjoining pavement, or if during general construction operations the adjacent pavement or base material was disturbed, then this adjoining pavement must also be removed and replaced. Where irregular surfaces are to be surfaced, existing pavement shall be cut parallel to the alignment of the pipe or to the centerline of the roadway, at the discretion of the Owner. Asphalt concrete pavement shall be saw cut to a minimum depth of 2 inches at a point not less than 9 inches outside the limits of excavation or the previous pavement cut (made by pneumatic tools), whichever limits are the greater. Where a trench edge is less than 5 feet from the existing edge of pavement, gutter, or curb, the remaining existing pavement shall be removed and replaced with new base course and pavement.

2. Wherever asphalt cement pavement does not terminate against a curb, gutter, or another pavement, the Contractor shall provide and install a redwood header and stakes. Such headers and stakes shall remain in place upon completion of the improvements.

3. Headers shall be 2-inch (nominal size) boards, the vertical dimension of which shall at least be equal to the thickness of the pavement at the header line. Side stakes 2 inches by 3 inches (nominal size), 18 inches long or longer, and spaced not over 4 feet apart shall be driven on the outside of the headers to a depth of 1 inch below the top and then nailed to the header. The joints between the individual boards being used as headers shall be spliced with a 1-inch thick (nominal size) board of the same height as the header and not less than 24 inches long. Headers and stakes shall be redwood.

4. Permanent pavement shall be placed prior to removing traffic control and allowing traffic to travel through the area. This requirement applies to both potholes and installation of the work.

5. The pavement to be restored by the Contractor shall include all classes and types of pavements whether in main roadways, shoulders, curbs, gutters, driveways or sidewalks.

6. In order to obtain a satisfactory junction with adjacent surfaces, the Contractor shall cut back and trim the edges so as to provide a clean sound, vertical joint, before permanent replacement of an excavated or damaged portion of pavement, gutter, driveway, curb or sidewalk with the same kinds of materials as used in the original construction, and to the same thickness and other applicable dimensions, as nearly as may be, in such manner as to restore the affected portions of all said pavement facilities to a sound and serviceable condition satisfactory to the Owner and the agency having jurisdiction.

7. Where cement-sand slurry, cement-soil slurry, or soil cement is used as a base to backfill trench up to bottom of asphalt paving, as specified in the Contract Documents, aggregate base shall not be placed except as shown on the Plans.

8. An herbicide effective against native grasses and weeds of the area shall be applied on top of the subgrade in the quantity and according to the methods recommended by the manufacturer.

9. Prime coat shall be applied to in-place base at a rate as recommended by the manufacturer and as required by the SSPWC.

10. Apply tack coat of Grade SS1h on existing horizontal and vertical surfaces to come in contact with new asphalt pavement at the rate of 0.2 gallons per square yard or greater as recommended by paving fabric manufacturer. Width of tack coat shall be 6 inches greater than the paving fabric to be placed.

11. Preparation for placement of paving fabric shall be as recommended by the paving fabric manufacturer. Contractor shall not install more paving fabric than can be paved over in a day.

12. Install paving fabric either with mechanical equipment or manually. Fabric shall be installed in all locations to receive permanent pavement evenly with a minimal amount of joints, folds, and wrinkles. Joints in the paving fabric shall be overlapped no less than 2 inches and no greater than 6 inches.

13. Place and compact asphalt concrete to match original finished surface. Placement of asphalt concrete shall be done by use of an automated asphalt paving machine specifically designed for the placement of asphalt paving. Placement of permanent asphalt concrete with hand tools or walk behind devices will not be allowed. Physical appearance and quality of surface shall be as follows:

    a. All roller marks shall be eliminated and a density of 95% minimum to 98% maximum has been achieved per California Test 304.

    b. The completed surfacing shall be thoroughly compacted, smooth and free from ruts, humps, depressions or irregularities. Any ridges, indentations or other objectionable marks left in the surface of the asphalt concrete by blading or other equipment shall be eliminated by rolling or other means. The use of any equipment that leaves ridges, indentations or other objectionable marks in the asphalt concrete shall be discontinued, and acceptable equipment shall be furnished by the Contractor.

    c. When a straightedge 12 feet long is laid on the finished surface and parallel with the center line, the surface shall not vary more than 0.01-foot from the lower edge of the straightedge. The transverse slope of the finished surface shall be uniform to a degree such that no depressions greater than 0.02-foot are present when tested with a straightedge 12 feet long laid in a direction transverse to the center line and extending from edge to edge of a 12-foot traffic lane or road section.

14. Apply fog seal of the Grade SS1h at the rate of 0.1 gallon per square yard. Application of fog seal is not required where area is to receive subsequent asphalt overlay.

15. Apply rock dust blotter to prevent tracking. Rock dust shall not be spread until intermediate rolling is complete and pavement temperatures have dropped below 200 degrees Fahrenheit.

E. Asphalt Overlay

1. Perform asphalt overlay where indicated on the Drawings.

2. Following cold milling of pavement surface, cleaning and preparation for asphalt overlay shall be performed at least 24 hours and not more than 72 hours prior to overlay operations.

3. Width of asphalt overlay at street or driveway intersections shall be calculated as a straight line along the edge of pavement across the intersection the other side of the intersection.

4. Asphalt overlay shall be performed after all heavy equipment has been demobilized off the project area and pavement restoration is complete. The Contractor shall arrange his work such that none of the Contractor's equipment heavier than H-20 loading is allowed to travel over the new asphalt overlay.

5. Cold milled surfaces shall not be less than 1/8-inch the mill depth required.

6. Prior to placement of tack coat, pavement to receive overlay shall be thoroughly cleaned by use of a motorized sweeper followed by a motorized vacuum broom. All loose and deleterious matter shall be completely removed. The use of hand cleaning tools is not allowed in areas accessible by motorized equipment.

7. Placement of asphalt concrete overlay shall be done by use of an automated asphalt paving machine specifically designed for the placement of asphalt paving. Placement of permanent asphalt concrete with hand tools or walk behind devices will not be allowed. Physical appearance and quality of surface shall be as follows:

    a. Placement of asphalt concrete overlay shall be in conformance with the requirements of the SSPWC and as modified in the Contract Documents.

    b. All roller marks shall be eliminated and a density of 95% minimum to 98% maximum has been achieved per California Test 308.

    c. The completed surfacing shall be thoroughly compacted, smooth and free from ruts, humps, depressions or irregularities. Any ridges, indentations or other objectionable marks left in the surface of the asphalt concrete by blading or other equipment shall be eliminated by rolling or other means. The use of any equipment that leaves ridges, indentations or other objectionable marks in the asphalt concrete shall be discontinued, and acceptable equipment shall be furnished by the Contractor.

    d. When a straightedge 12 feet long is laid on the finished surface and parallel with the center line, the surface shall not vary more than 0.01-foot from the lower edge of the straightedge. The transverse slope of the finished surface shall be uniform to a degree such that no depressions greater than 0.02-foot are present when tested with a straightedge 12 feet long laid in a direction transverse to the center line and extending from edge to edge of a 12-foot traffic lane or road section.

8. Apply tack coat of Grade SS1h on existing horizontal and vertical surfaces to come in contact with new asphalt pavement at the rate of 0.1 gallon per square yard.

9. Install paving fabric beneath the overlay in accordance with manufacturer's recommendations.

10. Place 1 ½-inch minimum asphalt overlay or thicker as shown on the Plans to achieve smooth and even surfaces.

11. Apply fog seal of the Grade SS1h at the rate of 0.1 gallon per square yard.

F. Installation of New Pavement

1. Place the minimum asphalt concrete specified herein unless otherwise shown on Drawings or as required thicker by agency having jurisdiction. Placement of asphalt concrete shall be done by use of an automated asphalt paving machine specifically designed for the placement of asphalt paving. Placement of permanent asphalt concrete with hand tools or walk behind devices will not be allowed.

2. Pavement adjacent to structures and in other areas inaccessible to heavy rollers shall be compacted by means of heated hand tools.

3. All manholes, valve boxes and other surface structures (surface facilities) shall be brought to new paved grades, as required and in accordance with the requirements of the agency having jurisdiction.

4. Following restoration of surface facilities, lids and covers shall be cleaned and painted with one coat of black paint.

G. ARAM Placement

1. ARAM interlayer shall be constructed per the requirements set forth in Section 302-10 of the SSPWC.

2. Stockpiling of screenings for ARAM interlayer after preheating and precoating with paving asphalt is permitted, and screenings may be spread at ambient temperatures only under the condition that a heater is provided capable of uniform heating of the screenings in-place over a full width 10 to 14 feet to a temperature above 140ºF prior to rolling. The heater shall be fully functional on-site at the time of spreading the screenings. The heating panel shall be adjustable in height above screenings, such height being uniform above the surface. The heater shall be propane fired.

3. Removal of thermoplastic stripes and markings shall be done in a manner not to scar the asphalt surface more than ¼ inch in depth, if any pavement damage is caused when removing thermoplastic or raised pavement markings, Contractor shall mill and fill these areas with a 0.17' PG64-10 asphalt with Class C2 aggregate, level with the surrounding pavement prior to the ARAM being applied

4. All surface oil and grease shall be removed, or sealed with emulsified gilsonite or an approved equivalent, prior to application of the ARAM layer.

5. All cracks larger than ½" in width shall be cleaned and hot patched with asphalt concrete.

H. Slurry Seal Mixing Equipment, Operation, and Placement

1. The rate of application shall be per Subsection 302-4.3 of the SSPWC.

2. Immediately prior to the slurry sealing operation, the Contractor shall sweep the entire surface with vacuum assisted power brooms. Cleanliness and dryness of the surface to receive the slurry seal shall be approved by the agency having jurisdiction.

3. The surface may be pre-wetted by fogging ahead of the slurry box if required by local conditions. Water used in pre-wetting the surface shall be applied at such a rate that the entire surface is damp with no ponding of water.

4. Each machine shall have a spray bar attached to enable the fogging of the pavement surface with water.

5. The Contractor shall apply the slurry using a minimum of two continuous mixers, one mixer to be applying slurry, while the other machine is in transit to and from the batch site. The Contractor shall provide trained and adequate number of personnel to ensure proper progress of the work.

6. Transit mix trucks shall not be used.

7. Care shall be taken during the application of the slurry seal to avoid placement over concrete or other such hardscape which should not receive a slurry seal coat. Contractor shall thoroughly clean all hardscape items which have been mistakenly covered by the slurry seal.

I. Clean-Up

1. During the Work, all roads, public and private, shall be kept clean and neat. Any debris, rubbish, unused materials or equipment shall be expeditiously removed.

J. Acceptance

1. All pavement restoration and repair shall be completed to the satisfaction of such public agency having jurisdiction. Owner will not issue the Statement of Acceptance for the Work until the Owner has received approval from the public agency having jurisdiction that the Work has been satisfactorily completed.

3.02 DETECTORS

A. The Contractor shall immediately replace all traffic loop detectors removed or damaged as a part of the Work. Cost for equipment and installation shall be included in the Contract Amount for the Work and no extra compensation will be made to the Contractor.

3.03 MAINTENANCE OF SURFACE

A. Following the certification of completion by the Owner, the Contractor shall maintain the surface of the re-paved, overlayed and new pavement areas for a least the period of the guarantee of the Work.

B. All materials and labor required for the maintenance of paving shall be supplied by the Contractor, and the Work shall be done in a manner satisfactory to the Owner and agencies having jurisdiction.

END OF SECTION

This page intentionally left blank.

TECHNICAL PROVISIONS

SECTION 02525

PAVEMENT STRIPING AND MARKINGS

PART 1 - GENERAL

1.01 SCOPE OF WORK

A. Furnish all labor, materials, equipment and incidentals required and install pavement striping and markings

1.02 RELATED WORK

A. Asphalt Concrete Pavement and Base are included in Section 02512.

B. Miscellaneous Work and Cleanup are included in Section 02990.

C. Temporary Traffic Control is included in Section 13520.

1.03 SUBMITTALS

A. Submit to the Engineer, in accordance with Section 01300, completely detailed product data and manufacturer's instructions.

B. Proof of traffic striping applicator's minimum required experience.

C. Approved temporary traffic control plans and related permits.

1.04 REFERENCE STANDARDS

A. Traffic stripes and pavement markings. Material and workmanship shall conform to the requirements of Section 84 "Traffic Stripes and Pavement Markings" of the California Department of Transportation (Caltrans) Standard Specifications.

B. Pavement markers. Material and workmanship shall conform to the requirements of Section 85 "Pavement Markers" of the California Department of Transportation (Caltrans) Standard Specifications.

C. Glass beads. Material and workmanship shall conform to the requirements of State Specification.

1.05 QUALITY ASSURANCE

A. Documentation of all existing traffic striping to be disturbed by the Contractor shall be done in accordance with Section 02990. All pictures and videos shall be adequate enough to show the color, type and extent of all striping which will be disturbed by the Contractor.

B. Traffic striping and pavement marking shall be performed by a qualified technician having a minimum of five (5) years' practical experience and successful history in performing such work.

1.06 NOTIFICATION

A. The Contractor shall notify the Owner and the agency having jurisdiction at least 7 Calendar Days prior to start of striping and marking.

B. For placement of striping, the Contractor shall notify the Owner and agency having jurisdiction for inspection after completion of layout of traffic striping and pavement markings prior to the application of paint.

PART 2 - PRODUCTS

2.01 MATERIAL

A. Thermoplastic Striping and Marking: Thermoplastic striping and marking material used for permanent pavement striping and marking shall be 100 percent solid thermoplastic in accordance with Section 84, "Traffic Stripes and Pavement Markings," of the Caltrans Standard Specifications and as additionally required under these Specifications.

B. Paint Striping and Marking: Paint striping and marking material used for permanent pavement striping and marking shall be in accordance with Section 84, "Traffic Stripes and Pavement Markings," of the Caltrans Standard Specifications and as additionally required under these Specifications.

C. Temporary Pavement Striping and Marking Paint: Temporary pavement striping and marking paint shall be latex based and one of the following or approved equivalent:

1. Dunn-Edwards: No. W 801, Vin-L-Stripe, epoxy-modified acrylic-latex based paint.
2. Glidden: 63240 Series, UltraHide Latex Traffic Paint.
3. Sherwin Williams: Set fast acrylic water borne traffic marking paint.

D. Colors:

1. Text: White
2. Lane Delineators, Street Dividers: White or Yellow
3. No Parking Zone Markings: Yellow
4. No Parking Curb: Red

5. Directional Arrows: White.

E. Glass Beads: Glass beads shall conform to the requirements of California State Specifications 8010-004, Type II.

F. Raised Pavement Markers: Manufactured in accordance with Caltrans Standard Plans and Specifications.

PART 3 - EXECUTION

3.01 PREPARATION AND APPLICATION

A. Traffic striping and pavement marking shall be performed to replace all striping and markings that are disturbed, removed, or stained beyond restoration due to construction.

B. Permanent Striping and Marking Thickness

1. Minimum thermoplastic striping thickness is 0.06 inches and minimum marking thickness shall be 0.100 inches to 0.150 inches.

2. Minimum application rate for painted striping and marking shall be in accordance with Section 84-3.05 of the Caltrans Standard Specifications. Black paint may be placed in one coat. All other paints shall be placed in two coats.

C. Install temporary traffic controls as approved by the Engineer, Owner, and agency having jurisdiction.

D. Pavement striping and markings application procedures shall comply with applicable requirements of governmental agencies having jurisdiction, including airborne emissions and industrial waste disposal requirements.

E. Paint used for temporary pavement striping shall be performed when pavement is clean and thoroughly dry, ambient temperature is above 40 degrees Fahrenheit and precipitation is not expected within 12 hours of completion of application.

F. Permanent Striping Material Placement Locations:

1. Permanent pavement striping and marking within the Caltrans right-of-way shall be thermoplastic.

2. Permanent pavement striping and marking in the City of Camarillo jurisdiction shall be thermoplastic.

G. Temperature and Weather:

1. Thermoplastic shall be placed when the pavement surface temperature is between 61 degrees and 129 degrees Fahrenheit and in accordance with manufacturer's recommendation. Thermoplastic shall not be placed if rain is anticipated within 24 hours of placement.

2. Paint shall be placed when the atmospheric temperature is above 50 degrees Fahrenheit during placement and during anticipated drying period and in accordance with manufacturer's recommendation. Paint shall not be placed if paint may be damaged by rain, condensation, or other such water damage whatever the source during the anticipated drying period.

H. Prior to striping application pavement surface must be clean and thoroughly dry. Remove dirt, oil, grease, and other materials which may affect adhesion.

I. For painted surfaces, apply masonry conditioner on weathered or sandblasted surfaces, bricks, or stucco.

J. Apply paint at package consistency.

K. Glass Beads:

1. Glass beads for thermoplastic striping and marking shall be placed at a rate of not less than 8 pounds per 100 square feet.

2. Glass beads for painted striping and marking shall be placed following placement of the second coat of paint at rate of 5 pounds per gallon of paint.

L. Apply all striping with specifically designed and manufactured equipment for pavement striping and marking providing uniform straight edges without overspray.

M. Apply permanent traffic control striping and marking, including, but not limited to, stripes, directional arrows, cross walks and lettering and handicap striping and symbols as indicated on the Drawings and in accordance with local governing agency standards. Use stencils for arrows, lettering, and symbols.

N. Apply raised pavement markers in accordance with Caltrans Standard Plans and Specifications.

O. In areas where no work is being performed, temporary traffic controls have been removed, and pavement markings placed by the Contractor will be removed due to the future placement of overlay by the Contractor, the Contractor may place pavement markings using paint in lieu of thermoplastic. If the pavement markings will be installed for longer than 2 weeks, then the Contractor shall also install glass beads in the pavement markings.

3.02 CLEANING

A. During the work all access road, public and private, shall be kept clean and neat. Any debris, rubbish, unused materials or equipment shall be expeditiously removed.

B. Special care shall be taken to avoid discoloration of or material splashing on existing surfaces, including driveways, drainage ditches, curbs and gutters. The Contractor will be responsible for the removal of such discoloration, material overspray and splashes at the Contractor's sole expense.

END OF SECTION

This page intentionally left blank.

TECHNICAL PROVISIONS

SECTION 02620

STEEL PIPE AND FITTINGS

PART 1 - GENERAL

1.01 SCOPE OF WORK

A. Furnish all labor, material, tools, equipment and incidentals required to furnish, install and test all steel pipe and fittings, rubber gaskets, cement mortar and joint filler for inside joints and cement mortar for outside joints of all pipe, as well as for all associated and required pipeline materials, and as shown on the Drawings and as specified herein.

1.02 RELATED WORK

A. Trenching, backfilling and compaction are included in Section 02220.

B. Granular materials are included in Section 02230.

C. Installation of pipe in casing is included in Section 02350.

D. Water pipeline testing and disinfection are included in Section 02660.

E. Cold applied plastic tape coating is included in Section 09873.

F. Surface preparation and shop prime painting are included in Section 09910.

1.03 SUBMITTALS

A. Submit to the Engineer, as provided in Section 01300, supplier information, and shop drawings with a tabulated layout schedule showing the location of each piece, by mark number, for the entire job, method of manufacturing and installation of pipe, joint details, fittings and any specials.

B. Pipe material submittals shall be complete for the items submitted. Inclusion of additional or repeat previously-approved or non-approved items in subsequent submittals will not be allowed. The Engineer, at his option, may reject such submittal requiring the Contractor to divide the submittal into two or more separate submittals.

C. Partial or incomplete submittals may not be accepted by the Engineer as specified in Section 01300.

D. The Contractor shall submit a Welding Procedure Specification (WPS) for all welds required on the project, a welder's Procedure Qualification for all welders proposed on the project, and the certificate for the liquid-penetrant technician proposed on the project to the Engineer for review. These submittals shall be subject to the Owner's approval.

E. Pipe materials submittal shall include:

1. Certified dimensional drawings of all pipe, fittings, and appurtenances.

2. Joint and pipe/fitting wall construction details which indicate the type and thickness of steel pipe wall, the position, type, size, and area of reinforcement; manufacturing tolerances; and all other pertinent information required for the manufacture of the product. Joint details shall be submitted where deep bell or butt strap joints are required for control of temperature stresses.

3. Fittings and specials details such as couplings, elbows, wyes, tees, outlets, connections, test bulkheads, and nozzles or other specials, where indicated, which indicate amount and position of all reinforcement. All fittings and specials shall be properly reinforced to withstand the internal test pressure, both circumferential and longitudinal, and the external loading conditions required by the project installation.

4. Material lists and steel reinforcement schedules which include and describe all materials to be utilized.

5. Line layout in tabular form and marking diagrams which indicate the specific number of each pipe and fitting and the location of each pipe and the direction of each fitting in the completed line. In addition, the line layouts shall include: the pipe station and invert elevation at all changes in grade or horizontal alignment; the station and invert elevation to which the bell end of each pipe will be laid; all elements of curves and bends, both in horizontal and vertical alignment; and the limits of each reach of concrete encasement and welded joints.

6. Submittals shall document coordination with overall project horizontal control. Coordination documentation shall consist of digital file of coordinates (Northing and Easting) and elevations of each joint, ASCII or AUTOCAD 2000 format. Digital file shall be submitted in duplicate accompanying each line layout submittal.

7. Full and complete information regarding location, type, size, material method, and extent of all welds shall be shown on the shop drawings. The shop drawings shall distinguish between shop and field welds and shall identify welds which merit special welding sequences or techniques. Shop drawings shall indicate by welding symbols or sketches the details of the welded joints, and the preparation of parent metal required to make them. Joints or groups of joints in which welding sequence or technique are especially important shall be carefully controlled to minimize shrinkage stresses and distortion.

8. Shop and field welding procedures and welders qualification certification. Welders qualification certification shall be under the provisions of ANSI/AWS D1.1 by an independent local, approved testing agency and shall be dated not more than six (6) months prior to commencing work.

9. Design calculations for stulling and bracing demonstrating conformance with handling, transportation and installation deformation limits specified in Paragraph 1.06B herein.

10. Technical data sheet for dielectric coating, if specified, statement of suitability for the intended use, and manufacturer's instructions and recommendations for storage, mixing, handling, and application.

11. Shop applied primer or protective coating including color, minimum dry film thickness and manufacturer's data sheet.

F. Prior to shipment of pipe, submit certified test reports that the pipe for the Contract was manufactured and tested in accordance with the AWWA standards and the requirements specified herein.

G. Submit a comprehensive pipe inspection report for each pipe section manufactured. The report shall include the following.

1. As-built drawing with as-built dimensions.
2. Cylinder number from which pipe was manufactured.
3. Certified mill test reports corresponding to pipe and appurtenances.
4. Certified hydro test reports.
5. NDT reports.

H. Submit a summary list cross-referencing the heat numbers and pipe shop numbers with the pipe mark number.

I. Design Data

1. Minimum wall thickness of pipe and fittings smaller than 24 inches diameter shall be as shown on the Drawings. Minimum wall thickness of larger than 24-inch pipe shall be 0.3125 inches.

2. Unless otherwise shown on the Drawings, mortar lining thickness shall be as specified in Paragraph 2.02K.

3. Unless otherwise shown on the Drawings, minimum mortar coating thickness shall be as specified in Paragraph 2.02M.

4. Pipe and fitting minimum wall thickness, if not indicated on the Drawings, shall be designed in accordance with C200 and C208 and the requirements herein. Minimum wall thickness for fittings shall be equal to wall thickness of the adjacent pipe.

5. The wall thickness shall be increased, as required, at all bends, fittings and anchorage locations where thrust is transmitted by the pipe.

6. Pipe deflection under live plus dead loads shall be evaluated at depth of cover indicated on the Drawings plus 5 feet.

1.04 REFERENCE STANDARDS

A. American Association of State Highway and Transportation Officials (AASHTO)

1. Standard Specification for Highway Bridges.

B. American Society for Testing and Materials (ASTM)

1. ASTM A36 - Specification for Carbon Structural Steel

2. ASTM A53 - Standard Specification for Pipe, Steel, Black and Hot-Dipped, Zinc-Coated, Welded and Seamless

3. ASTM A139 - Specification for Electric-Fusion (Arc)-Welded Steel Pipe (NPS 4-in and over).

4. ASTM 234 - Specification for Pipe Fittings for Wrought Carbon Steel and Alloy Steel for Moderate and Elevated Temperatures.

5. ASTM A283 - Specification for Low and Intermediate Tensile Strength Carbon Steel Plates.

6. ASTM A572 - Specification for High-Strength Low-Alloy Columbium-Vanadium Structural Steel.

7. ASTM A1011 - Specification for Steel, Sheet and Strip, Hot-Rolled, Carbon, Structural, High-Strength Low-Alloy and High-Strength Low-Alloy with Improved Formability.

8. ASTM A1018 - Specification for Steel, Sheet and Strip, Heavy Thickness Coils, Hot-Rolled, Carbon, Commercial, Drawing, Structural, High-Strength Low-Alloy, and High-Strength Low-Alloy with Improved Formability.

9. ASTM C150 - Specification for Portland Cement.

10. ASTM E165 - Practice for Liquid Penetrant Examination.

11. ASTM E709 - Practice for Magnetic Particle Examination.

C. American Water Works Association (AWWA)

1. AWWA C200 - Steel Water Pipe - 6-in (150mm) and Larger

2. AWWA C205 - Cement-Mortar Protective Lining and Coating for Steel Water Pipe 4-in and Larger - Shop Applied.

3. AWWA C206 - Field Welding of Steel Water Pipe.

4. AWWA C207 - Steel Pipe Flanges for Waterworks Service-Sizes 4-in Through 144-in (100mm Through 3,600mm).

5. AWWA C208 - Dimensions for Fabricated Steel Water Pipe Fittings.

6. AWWA C210 - Liquid-Epoxy Coating Systems for the Interior and Exterior of Steel Water Pipelines

7. AWWA C600 - Installation of Ductile-Iron Water Mains and Their Appurtenances.

8. AWWA M11 - Steel Pipe - A Guide for Design and Installation.

D. American National Standards Institute (ANSI)

1. ANSI B16.1 - Cast Iron Pipe Flanges and Flanged Fittings.

2. ANSI B16.5 - Pipe Flanges and Flanged Fittings.

E. American Welding Society (AWS)

1. AWS D1.1 - Structural Welding Code - Steel.

F. American Society of Mechanical Engineers (ASME)

1. Pressure vessel code.

G. American Society for Nondestructive Testing Inc. (ASNT)

1. ASNT SNT-TC-1A - Recommended Practice

1.05 QUALITY ASSURANCE

A. The manufacturer is responsible for the performance of all inspection requirements as specified in AWWA C200. In addition, all pipe and fittings to be installed under this Contract may be inspected at the plant by the Owner for compliance with this Section by an independent testing laboratory selected and paid by the Owner. Specifically require the manufacturer to perform the following:

1. Notify the independent testing laboratory at least 10 Working Days prior to the start of any activity subject to inspection.

B. Inspection of the pipe and fittings will also be made by the Owner after delivery. The pipe shall be subject to rejection at any time on account of failure to meet any of the requirements specified herein, even through sample pipes may have been accepted as satisfactory at the place of manufacture. Pipe rejected after delivery shall be marked for identification and shall be removed from the Site at once.

C. All materials used in the manufacture of the pipe shall be tested at the factory in accordance with the requirements of AWWA C200, as applicable, and the requirements herein.

1. After the joint configuration is completed and prior to lining with cement-mortar, each length of pipe of each diameter and pressure class shall be shop-tested and certified to a pressure of at least 75 percent of the yield strength of the pipe steel cylinder.

2. Tensile tests of production welds on steel cylinders shall be accomplished at the start of production and at intervals thereafter not to exceed each 1,000 lineal feet of weld seam. Each test shall consist of two samples prepared and tested in accordance with the applicable provisions of AWWA C200 Section 4.11.5.1, except that test samples shall be taken each 1,000 lineal feet of weld and change of heat number. Cylinder samples shall develop a stress of not less than 90 percent of the indicated minimum strength of the material being tested. A guided bend test specimen shall be considered as having passed only if no crack or other open defect exceeding 1/8 inch measured in any direction is present in the weld metal or heat affected zone after bending.

3. In addition to those tests specifically required, the Owner may request additional samples of any material including tape wrap and mixed mortar and lining and coating samples for testing by the Owner. The additional samples shall be furnished at no additional cost to the Owner.

D. All welding procedures used to fabricate pipe shall be prequalified under the provisions of AWS D1.1. Welding procedures shall be required for, but not necessarily limited to, longitudinal and girth or spiral welds for pipe cylinders, spigot and bell ring attachments, reinforcing plates and ring flange welds, and plates for lug connections. All final passes of all manual welds shall be liquid penetrant tested as specified in AWS D1.1.

E. All welding shall be done by skilled welders, welding operators, and tackers who have had adequate experience in the methods and materials to be used. Welders shall be qualified under the provisions of AWS D1.1 by an independent local, approved testing agency not more than 6 months prior to commencing work on the pipeline. Machines and electrodes similar to those used in the Work shall be used in qualification tests. The Contractor shall furnish all material and bear the expense of qualifying welders.

F. Welding shall conform to AWWA C-200 and AWS D1.1 and the supplemental requirements specified below.

1. The maximum gap between edges of circumferential seams shall be 1/8-inch ± 1/16-inch.

2. Weld shall have no valley, groove or undercut along the edge or in the center of the weld.

3. Deposited metal shall be fused smoothly and uniformly into the plate surface at the edges of the joints.

4. Where welding is interrupted by faulty machine operation or for any other reasons, weld shall be chipped back up to the location where the presence of solid and clean metal is found. Welding operations shall be resumed from such location.

5. Coil splices for spiral seams shall be a minimum of 2 feet away from the ends of the pipe cylinder.

6. Welded joints shall be the type that will produce complete fusion of the plates and shall be free from unsound metal, pinholes and cracks.

7. The finish of welded joints shall be reasonably smooth and free from grooves, depressions, burrs, and other irregularities.

8. Prior to repairing defective weld, cracked portions of weld, trapped welding flux, porous weld material and other defects shall be removed to expose clean and sound metal surfaces. Weld repair work shall not be performed prior to approval of the surfaces by the inspector.

9. If the percent of the weld defect exceeds 10% for longitudinal seams or 5% of the spiral seams, the pipe section will be rejected.

10. Test the back-gouge and manually applied welds to fabricate fittings using liquid penetrant method if not hydro tested.

G. The Contractor shall furnish a certified affidavit of compliance stating that all pipe and other products or materials furnished under this Section of the Specifications comply with AWWA C200, C206, and C208, as applicable, and the following supplemental requirements:

1. Physical and chemical properties of all steel.

2. Hydrostatic test reports.

3. Results of production weld tests and inspections.

H. All expenses included in making samples for certification of tests shall be borne by the Contractor.

I. Field testing shall conform to the requirements of Section 02660.

1.06 HANDLING PIPE AND FITTINGS

A. Pipe shall be transported from the plant to the Site on padded bunks with nylon tie-down straps or padded banding to adequately protect the pipe and coating.

B. Each section of pipe 20-inches in diameter and larger, including bends and special fittings, shall be protected from undue deformation during handling, transportation and installation by proper internal bracing. The bracing shall be placed near each end of the pipe and at suitable intervals between the end bracings, at a minimum of two equally spaced locations for pipe lengths greater than 30 feet and one centered location for pipe lengths 30 feet and less, as required to prevent the pipe from exceeding 1.0 percent deformation measured on the pipe diameter. Such 1.0 percent deformation shall be a total combination of pipe deflection and the pipe manufacturer's tolerances, in accordance with AWWA C200 and AWWA C205, as applicable. Bracing of pipe 48 inches in diameter and larger shall have a minimum of six points of bearing on the pipe, shall be fitted to the curvature of the interior pipe surface, shall be wedged against the mortar lining in a manner which will secure the bracing during handling, installation and backfilling and shall also prevent damage of the interior lining. Bracing for pipe smaller than 48 inches in diameter shall be similar, except four points of bearing shall be acceptable. All internal bracing shall remain in place until the pipe has been installed and backfilled, or until its removal is otherwise authorized by the Owner.

C. Pipe shall be handled, stored and shipped in a manner that will prevent damage to the coating and lining. Pipe shall be handled with wide double belt slings with spreader bar or rubber padded forklifts. Chains, cables or other equipment likely to cause damage to the pipe or coating shall not be used.

D. No metal tools or heavy objects shall be permitted to come into contact unnecessarily with the finished coatings and linings. Workmen will be permitted to walk upon the coating only when necessary, in which case they shall wear shoes with rubber or composition soles and heels. All pipe and fittings, specials and couplings shall be examined before laying and no piece shall be installed which is found to be defective. Any damage to the coatings and linings shall be repaired as acceptable to the Owner.

E. If any pipe is found to be defective after it has been laid, it shall be removed and replaced with a sound pipe in a satisfactory manner by the Contractor, at his/her own expense.

F. Stored pipe shall at all times be supported on sawdust bags, sand bags, or other suitable support. Bags shall be of sufficient size to prevent contact of the pipe coating with the ground or any other obstruction. Rolling the pipe on the ground will not be permitted.

PART 2 - PRODUCTS

2.01 GENERAL

A. Steel pipe shall conform to AWWA C200 and the supplemental requirements specified herein.

B. The Contractor shall legibly mark all pipes and specials, on both the inside and outside of the pipe, in accordance with the laying schedule and marking diagram. Each pipe shall be numbered in sequence and said number shall appear on the laying schedule and marking diagram in its proper location for installation. Each full pipeline station shall also be marked on the inside left side (left midpoint while facing increasing stations) of the pipeline, and indicating the direction of increasing stations. All special pipe sections and fittings shall be marked at each end with top field centerline. The word "top" shall be painted or marked on the outside top spigot end of each pipe section.

C. Maximum pipe laying lengths shall normally be 50 feet with shorter lengths provided as required or indicated.

D. For pipe cylinder wall thickness of 3/8-inch or less, the maximum radial offset (misalignment) for submerged arc and gas metal arc welded pipe shall be 0.1875 times the cylinder wall thickness or 1/16-inch, whichever is larger. For pipe cylinder wall thickness of greater than 3/8-inch, the maximum radial offset shall be 0.1875 times the cylinder wall thickness or 5/32-inch, whichever is smaller.

E. The pipe shall have smooth dense interior surfaces and shall be free from fractures, excessive interior surface crazing and roughness.

F. Closures and connecting pieces shall be provided as required to compensate for different headings in the pipe laying operation and to adjust the pipe laying to conform to pipe stationing shown. The locations of correction pieces and closure assemblies shall be indicated on the Record Drawings.

G. All steel pipe and fittings shall be manufactured in the U.S. or Canada.

2.02 MATERIALS

A. Schedule Steel Pipe, Specials and Fittings: Pipe 12 inches and smaller unless otherwise shown on the Drawings shall conform to the following:

1. Schedule Steel Pipe, specials and fittings shall conform to ASTM A53 for Schedule 20 and 40 as shown on the Drawings. Where not otherwise specified herein or noted on the Drawings, schedule steel pipe, specials and fittings shall be Schedule 40. Mortar lining shall be as specified in Paragraph 2.02.K of this Section.

B. Steel pipe shall be fabricated from steel sheets, plates or coils in accordance with AWWA C200, Section 4. The steel sheets shall conform to ASTM A36 or ASTM A1101 Grade 33, 36 or 40, plates shall conform to ASTM A283 grade C or D or ASTM A572 Grade 42 or coil shall conform to the requirements of ASTM A139 Grades B or C. All welded seams, whether straight or spiral, shall be butt welded using an approved electric-fusion weld

process. Design stress for cement mortar coated pipe shall be limited to 50 percent of the yield or 16,500 psi whichever is less.

C. Steel for cylinders shall additionally have a maximum carbon content of 0.25 percent and a minimum elongation of 22 percent in a 2-inch gauge length. Steel cylinders shall have butt welded longitudinal and girth welds, whether straight or spiral, and shall be welded with an approved electric fusion weld process.

D. Cement for mortar shall conform to AWWA C205 and ASTM C-150 and shall be Type V. Fly ash or pozzolan shall not be used as a cement replacement unless otherwise specified.

E. Aggregates for mortar shall conform to ASTM C205, ASTM C-33 and Section 201-1.2.2 of the Standard Specifications.

F. Water for mortar shall conform to the quality requirements of Section 201-1.2.3 of the Standard Specifications.

G. Admixtures reducing water requirements or controlling set may be used in accordance with AWWA C205. The Contract shall submit for approval in writing any proposed admixture.

H. Fittings and specials shall be fabricated in accordance with AWWA C200, Section 4, and modified as noted herein, including non-destructive testing by dye penetrant of welds not previously tested in the straight pipe. Fittings shall conform to the dimensions of AWWA C208 and modified as noted herein, or may be fabricated into standard pipe lengths. Unless otherwise shown on the Drawings, elbows 22-1/2 degrees and smaller shall be two piece, greater than 22-1/2 degrees to 45 degrees shall be three piece, greater than 45 degrees to 67-1/2 degrees shall be four piece and greater than 67-1/2 degrees to 90 degrees shall be five piece. All tees, laterals and outlets shall be reinforced in accordance with the Drawings. Fittings and specials not detailed on the Drawings shall be submitted to the Engineer for review and shall conform to the details furnished by the manufacturer as allowed or approved by the Owner.

1. Specials and fittings shall conform to dimensions stipulated in AWWA C208 and modified as noted herein. Reinforcement for wyes, tees, outlets, and nozzles shall be designed in accordance with the Drawings. Reinforcement shall be designed for the pressure indicated and shall be in accordance with the Standard Drawings, where applicable. Specials and fittings shall be equal in pressure design strength and shall have the same lining and coating as the adjoining pipe.

2. Specials and fittings 24-inch and larger that cannot be mechanically lined shall be lined by hand-application, using the same materials as are used for the pipe and in accordance with the applicable AWWA C602 Standards. Lining applied in this manner shall provide protection equal to that indicated for the pipe. Fittings may be fabricated from pipe that has been mechanically lined. Areas of lining that have been damaged by such fabrication shall be repaired by hand-applications in accordance with applicable AWWA C602 Standards.

3. Access manholes with covers shall be as indicated. All threaded outlets shall be forged steel suitable for 300 psi service.

4. Outlets 12 inches and smaller may be fabricated from Schedule 30 or heavier steel pipe in the standard outside diameters, i.e., 12-3/4-inch, 10-3/4-inch, 8-5/8-inch, 6-5/8-inch, and 4-1/2-inch unless otherwise indicated on the Drawings or Standard Drawings.

5. In lieu of saddle or wrapper reinforcement as required by the design procedure shown on the Drawings, pipe or specials with outlets may be fabricated in their entirety of steel plate having a thickness equal to the sum of the pipe wall plus the required reinforcement.

6. Steel welding fittings shall conform to ASTM A234.

7. Fittings and specials shall be coated as specified for coating the straight pipe. The coating used shall be the same for all pipe, including straight pipe, fittings and specials. Pipe in structures shall be mortar coated unless indicated otherwise. Pipe which is indicated to be left uncoated shall be field painted as required in Sections 09910 and 09920.

8. A mark indicating the true vertical axis of the special shall be placed on the outside top and bottom of the special.

I. Pipe shall be furnished principally in 50-foot maximum net laying lengths with special lengths as required by plan and profile for location of elbows, tees, etc. or as required for installation. Pipe shall be furnished with O-ring joints unless otherwise noted on the Drawings. Shorter pipe lengths shall be provided as required on the Drawings.

J. Welded field joints shall be provided as shown on the Drawings. One end of each section of the joint shall be swaged out to form a “bell” end which will permit the “spigot” end. The angular deflection at lap welded field joints in square end pipe shall not exceed a pull of 3/4-inch and the spigot shall have a minimum penetration of 3/4-inch in the bell.

K. Interior surfaces of all steel pipe, fittings, and specials shall be cleaned and lined in the shop with cement mortar lining at a minimum mix of 1 part cement to 2 parts sand applied centrifugally in conformity with AWWA C205. Wire mesh reinforcement shall be used in the mortar lining of fittings and specials. After factory curing of the cement mortar lining and coating, the cement mortar lining of pipe and fittings shall be kept continually moist during storage, including storage at the site, by wrapping the ends with a plastic membrane and addition of water as needed.

1. During the lining operation and thereafter, the pipe shall be maintained in a round condition by suitable bracing or strutting. The lining machines shall be of a type that has been used successfully for similar work. Every precaution shall be taken to prevent damage to the lining. If lining is damaged or found faulty at the Site, the damaged or unsatisfactory portions shall be replaced with lining conforming to these Specifications at no additional cost to the Owner.

a. The minimum lining thickness shall be as follows, with a tolerance of plus or minus 25 percent:

Nominal Pipe Diameter (inches)	Lining Thickness (inches)
4-6	3/8
7-12	5/8
13-23	3/4
over 23	1

b. The pipe shall be left bare where field joints occur as indicated. Ends of the linings shall be left square and uniform. Feathered or uneven edges will not be permitted.

c. The lining material shall be installed in one continuous operation. Any deficiencies must be immediately removed and the lining cut back to a square shoulder and replaced full thickness. Lining patchwork along feather edged joints shall not be permitted.

d. The progress of the application of mortar lining shall be regulated in order that all hand work, including the repair of defective areas is cured in accordance with the applicable provisions of AWWA C200 and C205. Cement-mortar for patching shall be the same materials as the mortar for machine lining, except that a finer grading of sand and mortar richer in cement shall be used when field inspection indicates that such mix will improve the finished lining for the pipe.

e. For all pipe and fittings with plant-applied or cement-mortar linings, the Contractor shall provide a polyethylene or other suitable bulkhead on the ends of the pipe and on all special openings to prevent drying out of the lining. All bulkheads shall be substantial enough to remain intact during shipping and storage until the pipe is installed.

L. Buried pipe, specials, fittings and appurtenances shall be furnished with a cement mortar lining and coating in accordance with AWWA C205.

M. Cement mortar coating for cement mortar coated pipe shall be of 1-1/2-inch minimum thickness for pipes 24 inches and larger in diameter and 3/4-inch for smaller pipes. Reinforcement shall be spiral wire, wire fabric or wire mesh. Cement mortar coating shall be a minimum mix of 1 part cement to 2 parts sand

N. Coating system shall be continuous to the bell end of the pipe and shall be cut back sufficiently from the spigot end to permit field installation. Cement mortar coating "holdbacks" shall be provided at couplings, harness assemblies, joints for welding and tape wrapping, etc. as necessary for the proper assembly and installation of piping, valves, accessories, and other equipment specified or indicated. Contractor shall arrange for, and pipe manufacturer shall provide, coating holdbacks consistent with this requirement and the Contractor's proposed methods.

O. Restrained joints where indicated on the Drawings shall be restrained split-sleeve couplings, shouldered or grooved couplings or field welded bell and spigot joints with continuous fillet weld(s) as indicated.

P. No angular deflections will be permitted at butt-strap joints.

Q. For curved alignment requiring greater angular deflections at the joints than permitted for square end pipe by the limitations specified herein, bell ends only of pipe sections may be beveled a maximum of 2.0 degrees.

R. Miscellaneous materials indicated on the Drawings or otherwise required for proper completion of the Work shall be provided whether or not specifically set forth herein, and each item so provided shall be of high quality and shall be subject to rejection when, in the opinion of the Engineer, it fails to meet overall standards of quality and workmanship intended for the project. Such items shall include, but are not limited to, gratings, vents, valve boxes, valve and pipe supports, ladders, hangers, bolts, nuts, clamps and fasteners.

2.03 ADDITIONAL STEEL PIPE AND FITTINGS

A. Contractor shall provide additional welded steel pipe and fittings as tabulated herein.

B. Pipe and fittings shall be designed and fabricated in accordance with the Contract Documents.

C. Pipe, fittings and coatings shall be provided by the same manufacturer as the rest of the steel pipeline materials.

D. Pipe and fittings shall be provided in accordance with the following table.

Item	Quantity	Ends	Mark
48” dia., 20’ lay length pipe	2	Plain End by Bell	BL/Cl X
48” dia., 30’ lay length pipe	2	Plain End by Plain End	BL/Cl X
48” buttstrap	2	N/A	BL/Cl X

E. All pipe and fittings shall be designed and fabricated for Class 100 pipe, as specified herein. Cylinder thickness shall match the thickness used for the Class 100 pipe supplied for the SMP Phase 1D pipeline.

F. Buttstraps shall be fabricated in accordance with Standard Drawing 102. Air test ports and any other appurtenance shall be provided with the buttstrap.

G. The bell ends of pipe shall be provided in accordance with Standard Drawing 101B. Plain ends shall be furnished without shaping or any spigot rings.

H. Coatings and Linings:

1. Buttstraps shall be lined and coated with the pipe manufacturer's standard epoxy primer, applied in two coats of 2.0 mil dry film thickness in accordance with Section 09910.

2. Pipe:

   a. Lining and coating on pipe ends shall be held back a nominal 12 inches and two coats of the pipe manufacturer's standard epoxy primer shall be applied in two coats of 2.0 mil dry film thickness in accordance with Section 09910.

   b. The pipe shall be shop lined with coal-tar epoxy in conformance with AWWA C210.

   c. The "Mark" shown in the above table shall be placed on the top coating (latex coat) of each pipe and fitting using stenciled 2-inch high letters. The mark shall be placed at each end of the pipe on opposite sides.

3. Fittings:

   a. The "Mark" shown in the above table shall be placed on the top coating (latex coat) of each pipe and fitting using stenciled 2-inch high letters.

I. Adjustable galvanized steel stulling shall be used on the inside of the pipe sections.

J. Lining and coating systems shall be shop tested in full conformance with the procedures specified in AWWA C203, C210, and the Contract Documents.

K. The pipe and fittings specified herein shall be delivered to the District's Wellfield No. 2 at 6811 Grimes Canyon Rd. The Contractor shall provide equipment for unloading. The Contractor shall provide the District the delivery date at least 5 Working Days prior to the actual delivery.

PART 3 - EXECUTION

3.01 LAYING STEEL PIPE AND FITTINGS

A. Except as otherwise specified herein, pipe and fittings shall be installed in accordance with the requirements of AWWA M11.

B. All pipe shall be sound and clean before laying. When laying of pipe is not in progress, including lunchtime, the open ends of the pipe shall be closed by a watertight plug or other approved means. Good alignment shall be preserved in laying. The deflections at joints shall not exceed those recommended by the manufacturer and as specified herein. Fittings, in addition to those shown on the Drawings, shall be provided as required.

C. The Contractor shall permit and aid in the inspection of the coating and linings of the pipe at the time of installation and shall repair any damage before lowering the pipe into the trench. While being laid, the pipe shall not be rolled, skidded, or otherwise moved, when it contacts the ground at any point.

D. The method of jointing the pipe shall be in strict accordance with the manufacturer's instructions. Under ordinary conditions of laying, pipe shall be laid with bell ends upstream, unless otherwise approved by the Owner.

E. Prior to assembling the rubber gasketed joint or lap welded joint in position, metal or wooden spacers shall be placed against the inside shoulder of the bell to provide the proper space for mortar between abutting ends of the pipe.

F. The Contractor shall excavate bell holes in the trench as required for filling or coating exterior recesses at joints, and spaces sufficient to permit removal of the slings without damage to the pipe coating.

G. After the joint is assembled, a thin metal feeler gauge shall be inserted between the bell and spigot and the position of the rubber gasket checked around the complete circumference of the pipe. If the gasket is not in the proper position, the pipe shall be withdrawn, the gasket checked to see that it is not cut or damaged, the pipe re-laid, and the gasket again checked. During jointing, the pipe shall be held in place by partial backfilling between joints in such manner as to not interfere with the required work at the joints.

H. Each section of pipe shall be laid in the order and position shown on the laying schedule. The pipe shall be laid to the set line and grade, within approximately 1-inch plus or minus. The intent is to lay to grade on grades of zero slope.

I. Where necessary to raise or lower the pipe due to unforeseen obstructions or other causes, the Owner may change the alignment or the grades. Such change shall be made by the deflection of joints, by the use of bevel adapters, or by the use of additional fittings. However, in no case shall the deflection in the joint exceed the maximum joint pull as specified in Paragraph 2.02J herein. No joint shall be misfit any amount which will be detrimental to the strength and water tightness of the finished joint. In all cases, the joint

opening, before finishing with the protective mortar inside the pipe, shall be the controlling factor.

J. Except for short runs which may be permitted by the Owner, pipes shall be laid uphill on grades exceeding 10 percent. Pipe which is laid on a downhill grade shall be blocked and held in place until sufficient support is furnished by the following pipe to prevent movement. All bends shall be properly installed as shown on the Drawings.

K. Pipe struts shall be left in place until backfilling operations have been completed. After the backfill has been placed, the struts shall be removed and shall remain the property of the Contractor.

L. As soon as the excavation is completed to the bottom of the excavation, the pipe shall be firmly bedded in the bedding material to conform to the line and grade indicated on the Drawings. Granular fill shall be placed and compacted for the bedding and pipe zone as specified in Section 02220 to a point 1 foot above the top of the pipe. Blocking under the pipe will not be permitted.

M. Bedding material shall be compacted to give complete vertical and lateral support of the pipe. A depression shall be left in the supporting bedding material at the joint to prevent contamination of the rubber gasket immediately before being forced home. Before the pipe is lowered into the trench, the bell and spigot shall be cleaned and free from dirt. Gasket and bell shall be lubricated with a vegetable lubricant furnished by the manufacturer. The lubricant shall not be soluble in water, and shall be harmless to the rubber gasket. As soon as the spigot is centered in the bell of the previously laid pipe, it shall be forced home with jacks or come-along, if used. After the pipe is brought fully home, the gasket shall be carefully checked for proper position around the full circumference of the joint. The jacks or come-along (if used) shall be anchored sufficiently back along the pipeline so that the pulling force will not dislodge the pieces of pipe already in place.

N. The inside of all joint recess shall be mortared. The exposed steel along with the lining in both the bell and spigot ends shall first be coated with Sikadur 32 Hi-Mod or Sikadur 32 Hi-Mod LPL as manufactured by Sika or an approved equivalent. A stiff mortar shall be placed on the shoulder of the bell. The joint shall then be closed. Pointing of joints for pipe less than 24 inches in diameter shall be from handholes or a rubber sewer ball or squeegee shall be pulled through the pipe to remove excess mortar extruded on the inside surface of the pipe. Pointing of joints for pipe 24 inches and larger shall be by hand from inside the pipe.

Where bends and other fittings in the smaller diameter pipe preclude the use of balls or squeegees, detail fabrication and assembly drawings to minimize the need for handholes to finish interior mortar joints. Provide handholes or buttstrap with handhole closures as necessary to hand point all interior mortar joints not finished otherwise.

Mortar for the inside of pipe joints shall be mixed in the portion of not richer than 1 part, by weight, of cement to 1 part, by weight, of clean well-graded sand; and not leaner than 1

part, by weight, of cement to 2 parts, by weight, of clean, well-graded sand, and just sufficient water to obtain the proper consistency. To improve workability of the mortar, the Contractor, with the Owner's approval, may replace not more than 7 percent, by weight, of cement with hydrated lime or replace not more than 30 percent, by weight, of cement with approved pozzolan, or may add an approved air-entraining agent in the mortar, or may use any combinations of these. Any mortar which has become so stiff that proper placement without retempering cannot be assured shall be wasted. The Contractor shall prepare the mortar in small batches so as to avoid stiffening of the mortar prior to its application. The finished joint shall be smooth and flush with the adjacent pipe surfaces.

Where a quick setting mortar is required, Quikrete Companies, Quick-Setting Cement #1240 may be used. Contractor to ensure proper preparation of pipe surface in accordance with the manufacturer's recommendations prior to assembly of the joint for placement of cement mortar lining. All other parts of product use shall be per manufacturer's recommendations, except that the pipe may be placed in service after 24 hour damp cure.

O. After laying, the exterior joint recess of cement mortar coated pipe shall be filled with grout, unless shown otherwise in the details. Exterior joint recesses of cement mortar coated steel pipe and joint recesses of specials, fittings and appurtenance piping for steel pipe shall be filled with grout. Grout used for filling the outside joints by the pouring method shall be mixed in proportions of 1 part cement, by weight, to not more than 2 parts, by weight, of sand passing a No. 16 mesh screen and thoroughly mixed with water to the consistency of rich cream. A cloth band 9 inches wide shall be placed around the outside of the pipe and centered over the joint. The joint band shall be bound to the pipe by use of steel box strapping. The band shall completely and snugly encase the joint except for an opening at the top through which to pour the grout. The outside grout space, prior to filling with grout, shall be flushed with water so that the surfaces of the joint to be in contact with the grout filling will be thoroughly moistened when the grout is poured. Fluid grout shall be poured in only one opening in this joint and pouring shall be continuous until grout appears at the other side. The grout shall be rodded on both sides of the pipe, if necessary, to settle the grout and more grout added to fill the joint completely. The bands shall not be removed from the joint, and exposed portions of the joint, after filling, shall be covered with wet burlap or moist earth.

P. All non-welded joints shall be electrically bonded using bonding wire or clips and brazing cartridges furnished by the pipe manufacturer. In addition, bond across all valves, including insulating valves, flanges and couplings as shown on the Drawings and Standard Drawings. Bond in accordance with details shown on the Drawings and Standard Drawings. Install joint bonds with a cable loop extended above the field joint coating. Make the overall length of the conductor sufficient to provide flexibility at the pipe joint without transferring any tensile stress to the cable.

Q. Have on hand a sufficient supply of assorted short pipe lengths, adaptors and any other fittings necessary to prevent delays in pipe laying.

R. Restrained joints shall be installed to the limits indicated on the Drawings or as directed by the Engineer in accordance with applicable provisions of the above. Restraining shall be

as indicated and shall be by restrained split-sleeve couplings, shouldered or grooved couplings or field welding.

S. Unwelded o-ring joints and restrained joints using harnessed dresser couplings shall be electrically bonded using bonding wire and brazing cartridges furnished by the pipe manufacturer. Repair exterior pipe coatings at bonded joints with stiff mortar grout as indicated.

T. The Contractor shall excavate holes in the trench as required for coating exterior surfaces at joints, and spaces sufficient to permit removal of the slings without damage to the pipe coating.

U. Install insulating flanged joints at all exposed valves in vaults, manholes, and as shown on the Drawings. Clean all insulating components of the insulating flanged gasket set of all dirt, grease, oil, and other foreign materials immediately prior to assembly. Align bolt holes in mating flanges at the time bolts and insulating sleeves are inserted to prevent damage to the insulation. After flange bolts have been tightened, inspect each insulating washer for cracks or other damage. Replace all damaged washers. After assembly, measure resistance between each bolt and flange with a favorably reviewed ohmmeter. Minimum resistance shall be 50,000 ohms. Where the insulating joint is assembled in the shop and shipped as a unit, measure resistance between the flanges and between each bolt and flange in the shop.

V. As pipe laying progresses, the Contractor shall keep the pipe interior free of all debris. The Contractor shall completely clean the interior of the pipe of all sand, dirt, mortar splatter and any other debris following completion of pipe laying, pointing of joints and any necessary interior repairs prior to testing and disinfecting the completed pipeline.

3.02 MANUAL FIELD WELDING

A. Field welded joints shall be in accordance with AWWA C206 and the following.

B. Where exterior welds are performed, adequate space shall be provided for welding and inspection of the joints.

C. Buttstraps, where used or required, shall be per Calleguas Municipal Water District Standard Drawing No. 107 unless otherwise shown on the Drawings.

D. After the pipe and pipe joint are properly positioned in the trench, the length of pipe between joints shall be backfilled to at least one foot above the top of the pipe. Care shall be exercised during the initial backfilling to prevent movement of the pipe and to prevent any backfill material from being deposited on the joint.

E. To control temperature stresses, the unbackfilled joint areas of the pipe shall be shaded from the direct rays of the sun by the use of properly supported awnings, umbrellas, tarpaulins, or other suitable materials for a minimum period of two hours prior to the beginning of the welding operation and until the weld has been completed. Shading

materials at the joint area shall not rest directly on the pipe, but shall be supported to allow air circulation around the pipe. Shading of the pipe joints need not be performed when the ambient air temperature is below 45 degrees F.

F. Prior to the beginning of the welding procedure, any tack welds used to position the pipe during laying shall be removed. Any annular space between the laying surfaces of the bell and spigot shall be equally distributed around the circumference of the joint by shimming, jacking, or other suitable means. The weld shall then be made in accordance with AWWA C206. Each pass except the first and final one shall be peened to relieve shrinkage stresses; and all dirt, slag, and flux shall be removed before the succeeding bead is applied.

G. All welding procedures used to install pipe shall be prequalified under provisions of AWS D1.1. Welding procedures shall be required for field attachments and field welded joints.

H. Welds shall be fillet welds sized equal to the thickness of the cylinder or bell ring, as indicated. Welding shall be done by the Shielded Metal Arc Weld (SMAW) method. SMAW will be applied by means of continuous stringer beads or a weave pattern. The total width of each individual bead shall not exceed 3-1/2 times the electrode diameter. The electrode used on the root pass shall be E-6010 down. The remaining passes shall be E-7018 up. Each pass shall be completed and cleaned around the entire circumference of the pipe before commencing the next pass. No more than 1/8-inch of throat thickness shall be deposited per pass. Electrode diameter shall not exceed 1/8-inch. Completed fillet welds shall be convex. Only one welder shall be allowed per weld joint at any given time. During welding, a qualified welding foreman shall be on site at all times. The applicable reference standards are AWS D1.1-Structural Welding Code-Steel, and AWWA C206-Field Welding of Steel Water Pipe.

I. Weld Quality and Inspection

1. All welded joints shall be of a type that will produce complete fusion of the plates and shall be free from unsound metals, pinholes, and cracks. The finish of welded joints shall be reasonably smooth and free from grooves, depressions, burrs, and other irregularities, and there shall be no valley or undercut in the center or edges of the weld.

2. As soon as practicable after the welding of each joint, all field-welded joints will be examined and tested by the Owner as specified herein. All defects shall be removed, rewelded and retested. Upon retest, the repaired area shall show no cracks, leaks or other defects.

3. The Owner will visually inspect all welds and will require hydrostatic testing of all welded joints. Standards for acceptance for visual inspection shall be in accordance with ANSI/AWS D1.1, Section 10.17. When hydrostatic testing of a joint is not feasible, or if the Owner determines in its sole discretion that nondestructive testing is necessary to assure the quality of welded joints, the Owner may require the use of liquid-penetrant testing. When directed by the Owner, the root pass of welds shall be inspected by liquid-penetrant testing before the ensuing pass is made. The final pass of the welds shall also be inspected by liquid-penetrant testing. In all cases where

temporary attachments have been made, the base metal shall be tested by liquid penetrant and inspected for tears. The Contractor shall provide a technician certified to apply the liquid penetrant for examination by the Owner, and the Contractor shall bear all costs resulting from any directed nondestructive testing. Liquid-penetrant testing will not be required for those welds scheduled on the plans to be air-tested.

4. The Owner may demand the removal of any welder whose work on the pipe is deemed unsatisfactory, regardless of the results of liquid-penetrant and air testing.

J. Following testing of the joint, the exterior joint spaces shall be coated in accordance with these specifications after which backfilling may be completed.

K. At the Contractor's option, fillet welds may be made on either the inside or the outside of the pipe.

L. The Contractor shall provide ventilation during welding and joint mortaring operations in conformance with Cal/OSHA construction safety orders Sections 1532 and 1536.

3.03 CLEANING

A. At the conclusion of the laying and prior to testing, thoroughly clean all of the new pipelines by sweeping or spraying with water or other means to remove all dirt, stones, wood struts, pieces of wood or other material which may have entered during the construction period. Debris cleaned from the lines shall be removed at pipe ends. If, after this cleaning, obstructions remain, they shall be removed.

B. After the pipelines are cleaned and if the groundwater level is above the pipe, or following a heavy rain, the Owner will examine the pipe for leaks. If defective pipes or joints are discovered at this time, they shall be repaired or replaced.

3.04 INSTALLATION OF PIPE APPURTENANCES

A. All valves shall be handled in a manner to prevent any injury or damage to any part of the valve. All joints shall be thoroughly cleaned and prepared prior to installation. The Contractor shall adjust all stem packing and operate each valve prior to installation to insure proper operation.

B. All buried valves shall be coated and protected in accordance with Sections 09910, 09920 and 09930.

C. All valves shall be installed so that the valve stems are plumb and in the location shown.

D. Before flanged joints are assembled, the flange faces shall be thoroughly cleaned of all foreign material with a power wire brush. The gasket shall be centered and the connecting flanges drawn up watertight without unnecessarily stressing the flanges. All bolts shall be tightened in a progressive diametrically opposite sequence and torqued with a suitable, approved and calibrated torque wrench. All clamping torque shall be applied to the nuts only.

E. All buried flanges shall be coated and protected in accordance with Section 09930.

F. Insulated joints and appurtenant features shall be installed and constructed by the Contractor as shown on the Drawings. The Contractor shall exercise special care when installing these joints to prevent electrical conductivity across the joint. After the insulated joint is completed, an electrical resistance test will be performed by the Contractor and observed by the Owner. Should the resistance test indicate a short circuit, the Contractor shall remove the insulating units to inspect for damages, replace all damaged portions, and reassemble the insulating joint. The insulated joint shall then be re-tested to assure proper insulation.

END OF SECTION

This page intentionally left blank.

TECHNICAL PROVISIONS

SECTION 02623

HDPE PIPE AND FITTINGS

PART 1 - GENERAL

1.01 SCOPE OF WORK

A. Furnish all labor, materials, equipment and incidentals required and install high-density polyethylene (HDPE) pipe and fittings.

1.02 RELATED WORK

A. Earthwork is included in Section 02200.

B. Trenching, Backfilling and Compaction are included in Section 02220.

C. Pipeline Testing is included in Section 02660

D. Tracer Wire and Warning Tape are included in Section 13510.

1.03 SUBMITTALS

A. Test reports and certificates for qualification of pipe manufacturer for specified pipe size and material code designation.

B. Submit to the Engineer, in accordance with Section 01300, completely detailed working drawings and schedules of all high density polyethylene (HDPE) pipes and fabricated and molded fittings required. Shop drawings shall include but not be limited to; dimensioning, locations of outlets and manholes, locations of supports, anchorage, grade of materials, and all pertinent technical specifications for all piping to be furnished.

C. Pipe and fitting materials submittal shall include:

1. Manufacturing method and material standards
2. Grade of material
3. Wall thickness and tolerances
4. Pressure rating
5. Fitting fabrication details

D. Prior to each shipment of pipe, submit 3 copies each of the following certified test reports and certificates/affidavits.

1. Affidavit that all materials delivered comply with the AWWA 906 Standards and these Specifications, including the testing requirements.

2. Automated continual nuclear testing reports for thickness of pipe wall straight lengths taken during the manufacture of the pipe.

3. Two copies of certified test reports for all the tests to be performed in accordance with these Specifications and the AWWA – 906 Standards.

4. Stress regression test certification as per Section 2.01 B herein.

5. Certification of compliance of resin material as Specified in Section 2.01 C herein.

E. A detailed plan and description of recommended method for butt fusion of pipe, its procedure and parameters, and recommended equipment.

F. Certificates of qualifications of technicians/operators that will perform butt fusion for joining HDPE pipe and fittings. The pipe and fitting manufacturers shall also approve, in writing, qualifications of heat fusion equipment and operators/technicians. Operator/technician shall have the minimum experience as specified in this section under quality assurance.

G. If HDPE pipe and fittings are manufactured/fabricated by different organizations, then each organization shall submit a written guarantee stating compatibility between pipe and fittings such that they will perform together in accordance with the requirements of the Specifications.

1.04 REFERENCE STANDARDS

A. American Society for Testing and Materials (ASTM)

1. ASTM D638 - Standard Test Method for Tensile Properties of Plastics.

2. ASTM D790 - Standard Test Methods for Flexural Properties of Unreinforced and Reinforced Plastics and Electrical Insulating Materials.

3. ASTM D1238 - Standard Test Method for Flow Rates of Thermoplastics by Extrusion Plastometer.

4. ASTM D1248 - Standard Specification for Polyethylene Plastics Molding and Extrusion Materials.

5. ASTM D1505 - Standard Test Method for Density of Plastics by the Density- Gradient Technique.

6. ASTM D1599 - Standard Test Method for Short-Time Hydraulic Failure Pressure of Plastic Pipe, Tubing, and Fittings.

7. ANSI/ASTM D1603 - Standard Test Method for Carbon Black in Olefin Plastics.

8. ASTM D1693 – Standard Test Method for Environmental Stress – Cracking of Ethylene Plastics.

9. ASTM D2122 - Standard Method of Determining Dimensions of Thermoplastic Pipe and Fittings

10. ASTM D2290 - Standard Test Method for Apparent Tensile Strength of Ring or Tubular Plastics and Reinforced Plastics by Split Disk Method.

11. ASTM D2837 - Standard Test Method for Obtaining Hydrostatic Design Basis for Thermoplastic Pipe Materials.

12. ANSI/ASTM D2839 - Standard Practice for Use of a Melt-Index Strand for Determining Density of Polyethylene.

13. ASTM D3035 - Standard Specification for Polyethylene (PE) Plastic Pipe (SDR-PR) Based on Controlled Outside Diameter.

14. ASTM D3261 – Butt Heat Fusion Polyethylene (PE) Plastic Fittings for Polyethylene (PE) Plastic Pipe and Tubing.

15. ASTM D3350 – Standard Specification for Polyethylene Plastics Pipe and Fittings Material.

16. ASTM D4218 - Standard Test Method for Determination of Carbon Black Content in Polyethylene Compounds by the Muffle-Furnace Technique.

17. ASTM F714 - Standard Specification for Polyethylene (PE) Plastic Pipe (SDR- PR) Based on Outside Diameter.

B. American Water Works Association (AWWA)

1. AWWA C906 – Standard for Polyethylene (PE) Pressure Pipe and Fittings, 4 in. Through 63 in. for Water Distribution.

C. Plastic Pipe Institute (PPI)

1. PPI TR-3 - Policies and Procedures for Developing Recommended Hydrostatic Design Stresses for Thermoplastic Pipe Materials.

2. PPI TR-4 PPI Listing of Hydrostatic Design Bases (HDB), Strength Design Bases (SDB), Pressure Design Bases (PDB) and Minimum Required Strength (MRS) Ratings for Thermoplastic Piping Materials or Pipe.

D. Where reference is made to one of the above standards, the revision in effect at the time of bid opening shall apply.

1.05 QUALITY ASSURANCE

A. Pipe and fitting manufacturer shall have a minimum of 5 years of experience in the manufacture of similar size and type of HDPE pipe. One size of pipe manufactured in each of the following three size ranges; 4 to 12 in., greater than 12 to 24 in., and greater than 24 in. in each particular standard material code designation shall be tested by the elevated-temperature sustained-pressure test by the manufacturer. Each particular standard

material code designation to be used shall be tested in at least one specified size of pipe at the beginning of production.

B. Plant Inspection

1. The manufacturer is responsible for the performance of all inspection requirements as specified in AWWA C906.

2. All pipe and fittings to be installed under this Contract may be inspected at the plant by the Owner for compliance with these Specifications using an independent testing laboratory selected and paid for by the Owner.

3. Manufacturer shall notify the Owner/independent testing laboratory at least 72 hours in advance, if plant is within 250 miles of the Owner's office, or 10 calendar days in advance, if outside of 250 miles of the Owner's office, prior to requesting inspections or performing tests. The inspector shall have free access to those parts of a manufacturer's plant that are necessary to ensure that products comply with all requirements.

4. The manufacturer shall make available for use by the inspector, without charge, such tools and assistance as are necessary for inspection and handling of materials.

5. The Owner will bear the cost of inspection for any one plant producing HDPE pipe or fittings at any one time. Should two or more different manufacturing plants produce HDPE pipe or fittings at the same time, the Contractor shall bear the cost of labor, travel and lodging associated with inspection for all but the closest manufacturing plant. The labor cost basis shall be as per Special Condition Number 1-21.

C. The Owner will make inspection of the pipe and fittings after delivery. The pipe shall be subject to rejection at any time on account of failure to meet any of the requirements specified herein, even though sample pipes may have been accepted as satisfactory at the place of manufacture. Pipe rejected after delivery shall be marked for identification and shall be removed from the job immediately and shall not be allowed to be reworked or reused on any portion of the job.

D. All materials used in the manufacture of the pipe shall be tested at the factory in accordance with the requirements of AWWA C906, as applicable, and the requirements herein.

E. All straight lengths of high-density polyethylene (HDPE) pipe shall be from a single manufacturer. If straight lengths of HDPE and fittings of HDPE are from different manufacturers, then both manufacturers shall guarantee, in writing, that the straight pipe and fitting system will be compatible to each other in all respects and perform to the requirements of these Specifications.

F. Workmanship and Testing

1. The Owner may select the time and pipe or fitting piece to be tested except for at the beginning of production run which will be conducted as specified herein.

2. The manufacturer shall take adequate measures in the checking of incoming materials and in the production of pipe to ensure compliance with the requirements of these Specifications. The following tests relative to qualification of compounds and manufacturing processes and for quality assurance shall be conducted not less frequently than at the indicated intervals. Higher frequencies of these tests and additional tests shall be conducted, if necessary, and as determined by the manufacturer's quality-control program, to ensure compliance with the requirements of this Specifications and AWWA 906.

   a. All incoming lots of raw polyethylene materials shall be sampled and tested for melt-flow index and density. The testing results shall fall within the limits established between the material supplier and piping manufacturer.

   b. Each length of pipe surface shall be visually checked inside and outside for defects. The presence of these defects shall be cause to reject the pipe.

   c. Dimensions and tolerances shall be measured once per hour or once per length of pipe, whichever is less frequent.

   d. Bend-back test shall be performed at the beginning of each production run and at every 5,000 feet of pipe for each pipe size. The specimens tested shall be representative of the entire inside surface of the pipe. The elongation-at-break test may be substituted for this test.

   e. Ring-tensile strength test shall be performed at least once per production run, at 2,500 feet and at every 5,000 feet thereafter. The quick burst test may be substituted for this test.

   f. Carbon black content shall be determined for each individual lot of pre-compounded black PE material.

   g. A five-second-pressure test shall be performed at least once per production run. The elevated-temperature sustained-pressure test may be substituted for this test.

   h. Melt-flow index test shall be run on samples from the pipe at least once per day.

   i. Density test shall be run on samples from the pipe once per day, or once per lot of pre-compounded black PE material, whichever is less.

   j. Marking on each length of pipe shall be visually examined and checked for marking accuracy and legibility.

k. Each fitting shall be visually checked inside and outside for defects and the presence of defects shall be cause to reject the fitting.

l. A five-second pressure test shall be performed on the first fitting of a particular size and every fiftieth fitting thereafter. For purposes of this test, manhole outlets shall be considered as fittings.

G. Reworked materials shall meet all the requirements AWWA 906 and shall be subject to approval by the Owner's inspector. In no case such materials shall exceed 5% of total pipe materials for this project. Recycled materials will not be allowed in manufacture of HDPE pipe.

H. The heat fusion machine shall be capable of providing a detailed report of fusion parameters at each joint.

I. The pipe fusion machine operator/technician shall have a minimum of 3 years of experience for similar type and same or larger size of pipe being fused.

1.06 DELIVERY AND HANDLING

A. Marking

1. Pipe and fittings shall bear identification markings that will remain legible during normal handling and storage. The marking shall be printed indelibly in ink, or molded thereon in a manner that will not reduce the strength or otherwise damage the pipe.

2. Marking on the pipe shall be applied so that intervals between markings are no longer than 5 feet. Marking on the pipe and fittings shall include the following:

   a. Manufacturer's name or trade mark
   b. Nominal size and OD base
   c. Standard material code designation
   d. Dimension ratio
   e. Pressure class
   f. AWWA designation number, AWWA C906-90
   g. Manufacturer's lot number, production code including day, month, and year. (Manufacturer's code must allow traceability to supplier of raw material.)
   h. Material test category

B. Delivery, Handling, and Storing

1. All pipe and fittings shall, unless otherwise specified, be prepared for standard commercial shipment.

2. Care shall be taken in loading, transporting, and unloading to prevent injury to the pipe. Pipe shall be delivered to the site properly secured on delivery trucks so as to prevent

damage or excessive ovaling of the pipe. Stacking and support methods shall be per manufacturer's recommendations.

3. Pipe shall be stored on site neatly and on flat level ground, properly supported to prevent rolling or damage to the pipe. Storage of pipe shall be per manufacturer's recommendations.

PART 2 - PRODUCTS

2.01 MATERIAL

A. HDPE pipe and fittings shall not be supplied or manufactured by JM Eagle or any of its parent or subsidiary companies.

B. Materials used for the manufacture of polyethylene pipe and fittings shall be extra high molecular weight, high density ethylene/hexene copolymer PE 3408 polyethylene resin meeting the following physical property and pipe performance requirements:

Property	Specification	Units	Nominal Values
Material Designation	PPI/ASTM	-	PE3408
Cell Classification	ASTM D-3350	-	334434C (Min.)
Density	ASTM D-1505	gm/cm3	0.955
Melt Flow	ASTM D-1238	Gm/b mm	0.11 @ 2.16 kg (1)
Flex Modulus	ASTM D-790	Psi	135,000 (2)
Tensile Strength	ASTM D-638	Psi	3,000 (3)
ESCR	ASTM D-1693	F_0, Hrs.	$F_0 > 5000$
HDB @ 73^0F	ASTM D-2837	Psi	1,600
U-V Stabilizer	ASTM D-1603	%C	2.5

(1) Average Melt Index Value with a standard deviation of 0.01.
(2) Average Flexural Modulus with a standard deviation of 2000 psi.
(3) Average Tensile Stress at Yield with a standard deviation of 150 psi.

C. The polyethylene pipe manufacturer shall provide certification that stress regression testing has been performed on the specific product. Said certification shall include a stress life curve per ASTM D-2837. The stress regression testing shall have been done in accordance with ASTM D-2837, and the manufacturer shall provide a product supplying a minimum Hydrostatic Design Basis (HDB) of 1,600 psi, as determined in accordance with ASTM D-2837.

Further, the material shall be listed by PPI (the Plastics Pipe Institute, a division of the Society of the Plastics Industry) in PPI TR-4 with a 73°F hydrostatic design stress rating of 800 psi, and a 104°F hydrostatic design stress rating of 400 psi. The PPI listing shall be in the name of the pipe manufacturer, and shall be based on ASTM D-2837 and PPI TR-3 testing and validation of samples of the pipe manufacturer's production pipe.

D. The Manufacturer's certification shall state that the pipe was manufactured from one specific resin in compliance with these Specifications. The certificate shall state the specific resin used, its source, and list its compliance to these Specifications.

E. Material shall contain no recycled compound.

2.02 PIPE

A. The DR (Dimension Ratio), of the pipe supplied shall be as specified on the Drawings. Measurements shall be made according to the methods specified in ASTM D2122. Variation of pipe wall thickness as measured and calculated according to ASTM D2122 in any diametrical cross section of the pipe shall not exceed 12 percent.

B. Pipe shall be homogeneous throughout, uniform in color, opacity and density, and free from sticky or tacky material. The pipe walls shall be free from cuts, cracks, holes, blisters, voids, foreign inclusions, or other defects that are visible to the naked eye and that may affect the wall integrity.

C. HDPE straight lengths of pipe shall be manufactured black. The black color of the pipe shall be derived from a well-dispersed and finely divided carbon black. Sufficient antioxiclant shall be added to meet thermal stability requirements contained in ASTM D3350.

D. All pipe shall have product traceability.

E. 32-inch OD HDPE pipe shall be designed for a minimum of 60 psi working pressure with a dimension ratio of 21 unless otherwise shown the Drawings.

F. Pipe smaller than 32-inches shall be designed for a minimum of 100 psi working pressure with a maximum Dimension Ratio of 17 unless otherwise shown the Drawings.

2.03 FITTINGS

A. Fittings to be joined to polyethylene piping shall be manufactured for thermal heat fusion. Polyethylene fittings may be molded, thermoformed from pipe sections, or fabricated by heat fusion joining polyethylene components prepared from pipe, molded fittings, thermoformed pipe, or polyethylene sheet or block. Fiberglass wrap or other similar wrap will not be allowed for the fabrication of fittings. Molded fittings shall meet the requirements of ASTM D3261 for butt-type fittings, and the requirements of this Specification.

B. Fittings for 32-inch pipe shall be designed for a minimum working pressure the same as the working pressure for the pipe.

C. Fittings shall be homogeneous throughout and essentially uniform in color, opacity, density, and other properties. The inside and outside surfaces shall be semi-matte to glossy in appearance and free from sticky or tacky material. The walls shall be free from

cuts, cracks, holes, blisters, voids, foreign inclusions, or other defects that are visible to the naked eye and that may affect the wall integrity.

D. Molded fittings shall conform to the dimensional requirements set forth in the applicable ASTM fitting standard. Fabricated fittings shall meet the minimum dimensional requirements and tolerances of the pipe at the point of fusion.

E. Each polyethylene fusion fitting shall meet all the material requirements established for the pipe to which the fitting is to be joined.

F. The wall thickness of an outlet may be the same as the wall thickness of the pipe to which the outlet is to be joined. All fittings shall be properly rated according to the manufacturer's written recommendations, and clearly labeled on each fitting as such. In any event, after rating, each fitting shall be designed and manufactured to operate at not less than the design pressure of the pipe system for which it is intended with an included 2:1 safety factor.

G. Fitting shall meet the five-second-pressure test. The first fitting of a particular size and configuration made during a production run of that fitting, and thereafter every fiftieth fitting of that production run shall be subjected to the five-second-pressure test.

H. Standard fittings are tees, elbows, flange adapters, reducers, transition fittings, branch and service saddles, and hot-tap tees.

I. All fittings shall have product traceability. This shall be accomplished by the inclusion of markings as specified in Section 1.06.

J. All fittings shall be fabricated, complete, at the manufacturer's facility unless otherwise allowed by the Owner in writing.

2.04 JOINING

A. Polyethylene piping shall not be joined by solvent cements, adhesives (such as epoxies), or threaded-type connections.

B. Unless otherwise shown on the Drawings or as approved by the Owner, all HDPE pipe shall be butt fused according to ASTM D3261 and the manufacturer's recommendations. Flange adapters and back-up flanges shall be used where shown on the Drawings.

C. All ferrous steel material, except stainless steel, shall be wrapped with tape coating in accordance with Section 09930.

D. Bolts, nuts and washers for mechanical couplers and devices shall be stainless steel.

PART 3 - EXECUTION

3.01 LAYING PIPE AND FITTINGS

A. Handling and laying of pipe and fittings shall be in accordance with the manufacturer's instructions, as specified herein, and to line and grades as shown on the Drawings.

B. Pipe or fittings shall not be dropped. All pipe or fittings shall be examined before laying and no piece shall be installed which is found to be defective. Any damage to the pipe shall be repaired as directed by the manufacturer and approved by the Engineer. If any defective pipe is discovered after it has been laid, it shall be removed and replaced with a sound pipe in a satisfactory manner at the Contractor's own expense.

C. All pipe and fittings shall be thoroughly cleaned before laying, shall be kept clean until they are used in the work and shall conform to the lines and grades required when laid. Good alignment shall be preserved in laying. Fittings, in addition to those shown on the Drawings, shall be provided, if required, for crossing utilities or other obstructions that may be encountered upon opening the trench.

D. Dragging of pipe shall be kept to a minimum. Continuous dragging of long lengths of pipe for transport or installation will not be allowed. Damage to pipe, caused by dragging is the responsibility of the Contractor and may be cause for repair or replacement of damaged portion as determined by the Owner.

E. Pipe shall be installed on grade as shown on the Drawings. Elevation at each joint shall not deviate from that shown on the Drawings by +½- inch for 1,000 feet of pipe and at all times must slope in the same direction as shown on the Drawings.

F. Except for short runs, which may be permitted by the Owner, pipes shall be laid uphill on grades exceeding 10 percent. Pipe, which is laid on a downhill grade, shall be blocked and held in place until the following pipe to prevent movement furnishes sufficient support. All bends shall be properly installed as shown on the Drawings.

G. Pipe fused above ground shall be carefully handled to avoid damage to the pipe. Chains or cable type chokers will not be allowed when lifting fused sections of pipe. Nylon or other wide fabric slings or other similar lifting apparatus with spreader bars, shall be used where necessary.

H. The length of open trench required to construct the pipeline shall be kept to a minimum. Lengths of open trench not required for construction of the pipe shall be backfilled and paved such as to allow that portion of the roadway to be opened to the public. The maximum length of open trench shall not exceed 300 feet, unless otherwise approved by the Owner and agencies having jurisdiction.

I. Prior to installing a pipe section, the bedding material shall be brought to grade along the entire length of the section to be installed. The pipe bedding materials shall be as shown on the Drawings and as per these Specifications.

J. Bending of the pipe to achieve horizontal or vertical changes in direction is allowed. The minimum bending radius, measured along the centerline axis of the pipe is 50 times the nominal pipe size.

K. Vertical pipe deflections shall be checked in the presence of Owner's representative as soon as practicable after backfill has reached ground elevation with the use of a measuring device approved by the Owner. Measurement of inside diameter of pipe shall be true vertical and shall be between pipe soffit and pipe invert (12 and 6 o'clock positions). Percentage deflection of pipe shall be calculated as:

$$\text{Percent Deflection} = \frac{(\text{Base ID-Measured Vertical ID}) \times 100}{\text{Base ID}}$$

Base ID = 28.73 inches

A maximum 3 1/2 percent deflection of pipe will be allowed. Owner may measure pipe deflection at later date. Where pipe deflection is found to be more than 3 1/2 percent (1.89 inches), the pipe will be rejected. The contractor shall perform all corrective measures as directed by the Owner.

L. The Contractor shall excavate holes in the trench as required to permit removal of the slings, install flanges and providing coating and protective covers.

M. As pipe laying progresses, the Contractor shall keep the pipe interior free of all debris. The Contractor shall completely clean the interior of the pipe of all sand, dirt, and any other debris following completion of pipe laying and fusing of joints prior to testing the completed pipeline.

N. Until the pipe is backfilled, trench shall be free of water and kept dry to avoid floatation of the pipe. Laying of pipe with water in trench shall not be allowed.

O. The Contractor shall provide anchors if required and as recommended by the pipe manufacturer and approved by the Owner to avoid floatation of pipe until the pipe is backfilled at no additional cost to the Owner.

P. Install tracer wire and warning tape as shown on the Drawings and per Section 13510.

Q. Backfill trench in accordance with these Specifications and Drawings.

R. Perform hydrostatic and leak tests of all completed HDPE piping systems or completed portions of systems whichever is more convenient; however, all piping shall be leak tested. Leak tests shall be witnessed by the Owner.

3.02 HEAT FUSION OF PIPE

A. The joining method shall be the butt fusion method and shall be performed in strict accordance with the pipe manufacturer's recommendations. The butt fusion equipment used in the joining procedures shall be capable of meeting all conditions and procedures recommended by the pipe manufacturer, including but not limited to, temperature requirements, alignment, and interfacial fusion pressure and automatic recording of parameters for jointing.

B. Joining of HDPE pipe by butt fusion shall be performed by qualified technicians with a minimum of 3 years of experience for similar type and size of pipe. The heat fusion machines shall be approved or supplied by the pipe manufacturer and shall be capable of providing a detailed report of fusion parameters at each joint.

C. Sections of polyethylene pipe should be joined into continuous lengths on the job site above ground or in the pipe trench as applicable or required.

D. Heat fusion joining shall be 100% efficient offering a joint weld strength equal to or greater than the tensile strength of the pipe. Socket fusion shall not be used. Extrusion welding or hot gas welding of HDPE shall not be used.

E. Butt fusion procedure shall include the following steps but not limited to;

1. Securely fasten the pipe to be joined
2. Face the pipe ends
3. Align the pipe profile
4. Melt the pipe interfaces at recommended temperature
5. Join the two profiles together
6. Hold under recommended pressure
7. Cool down period.

F. In situations where different polyethylene piping materials must be joined, both pipe manufacturers should be consulted to determine the appropriate fusion procedures.

G. Submit detailed fusion joint reports as recorded by the heat fusion machine for all joints. If any joint as indicated by these reports is found to be unsatisfactory, the Contractor shall remove portions of the pipe containing such joint and install a new pipe piece as required and approved by the Owner.

H. The first fusion shall be a trial fusion to be performed in the field in the presence of the Owner. The trial fusion shall be allowed to cool completely, and then fusion test straps shall be cut out. The test strap shall be the longer of 12 inches or 30 times the wall thickness in length with the fusion in the center, and 1 inch minimum or 1.5 times the wall thickness in width. The test strap shall then be bent until the ends of the strap touch. If the fusion fails

at the joint, a new trial fusion shall be made, cooled completely and tested. Butt fusion of the pipe to be installed shall not commence until the trial fusion has passed the bent strap test.

I. Following the successful initial trial fusion, the bent strap test shall be performed once every fiftieth joint or once per month, whichever comes first.

3.03 CROSSING AND RELOCATING EXISTING UTILITIES

A. Perform any work required in crossing culverts, water courses, including brooks and drainage ditches, storm drains, gas mains, water mains, electric, telephone, gas and water services and other utilities. This work shall include: bracing, hand excavation, backfill and any other work required for crossing the utility or obstruction. Notification of utility companies shall be as specified elsewhere in the Specifications.

B. In locations where existing utilities cannot be crossed without interfering with the construction of the work as shown on the Drawings, contact Owner immediately for direction.

C. At pipe crossings and where designated by the Owner, firmly support the existing utility or pipe for its entire exposed length.

3.04 PIPE REPAIR AND REPLACEMENT

A. If pipeline fails any of the requirements specified herein, including; deflection, physical damage, inadequate beading of joints, etc. the affected length of pipe as determined by the Owner shall be repaired or removed and replaced. The option of repair or removal and replacement shall be at the discretion of the Owner and at no additional cost to the Owner.

3.05 CLEANING

A. At the conclusion of the work, thoroughly clean all of the new pipelines to remove all dirt, stones, and pieces of wood or other debris material which may have entered during the construction period.

END OF SECTION

This page intentionally left blank.

TECHNICAL PROVISIONS

SECTION 02625

SMALL DIAMETER PVC PIPE AND FITTINGS

PART 1 - GENERAL

1.01 SCOPE OF WORK

A. Furnish all labor, materials, equipment and incidentals required and install polyvinyl chloride (PVC) piping and appurtenances smaller than 18 inches as specified in the Contract Documents, and as required to completely interconnect all piping for a complete and operable system.

B. PVC pressure pipe and fittings shall be installed using gasketed joints, unless otherwise specified.

1.02 RELATED WORK

A. Trenching, Backfilling and Compaction are included in Section 02220.

B. Concrete work is included in Division 3.

C. Pipe Detection System is included in Section 13510.

1.03 SUBMITTALS

A. Shop Drawings and product data, in accordance with Section 01300, shall include the following:

1. Shop Drawings, including piping layouts and schedules, shall be submitted to the Engineer and shall include dimensioning, fittings, locations of valves, if any, and appurtenances, joint details, methods and locations of supports, anchorage, grade of material, and all other pertinent technical specifications for all piping to be furnished.

2. Shop Drawing submittals for piping under this Section shall include manufacturer's data and information required for the complete piping systems.

B. Certificates: The Contractor shall furnish a sworn certificate from the pipe manufacturer that the pipe materials to be furnished are in full compliance with these Specification requirements.

C. Manufacturer's technical data and printed instructions for the installation of plastic pipe.

1.04 REFERENCE STANDARDS

A. American Society for Testing and Materials (ASTM).

1. ASTM D1784 - Standard Specification for Rigid Poly (Vinyl Chloride) (PVC) Compounds and Chlorinated Poly (Vinyl Chloride) (CPVC) Compounds.

2. ASTM D1785 - Standard Specification for Poly (Vinyl Chloride) (PVC) Plastic Pipe, Schedule 40, 80 and 120.

3. ASTM D2122 - Standard Test Method for Determining Dimensions of Thermo-plastic Pipe and Fittings.

4. ASTM D2466 - Standard Specification for Poly (Vinyl Chloride) (PVC) Plastic Pipe Fittings, Schedule 40.

5. ASTM D2467 - Standard Specification for Poly (Vinyl Chloride) (PVC) Plastic Pipe Fittings, Schedule 80.

6. ASTM D2774 – Standard Practice for Underground Installation of Thermoplastic Pressure Piping.

7. ASTM D3139 - Standard Specification for Joints for Plastic Pressure Pipes Using Flexible Elastomeric Seals.

8. ASTM F477 - Standard Specification for Elastomeric Seals (Gaskets) for Joining Plastic Pipe.

B. American Water Works Association (AWWA)

1. AWWA C605 – Underground Installation of Polyvinyl Chloride PVC Pressure Pipe and Fittings for Water.

2. AWWA C900 – Polyvinyl Chloride (PVC) Pressure Pipe and Fabricated Fittings, 4 in. Through 12 in. (100 mm Through 300 mm), for Water Distribution

C. Plastic Pipe Institute (PPI)

1. PPI TR-3 - Policies and Procedures for Developing Recommended Hydrostatic Design Stresses for Thermoplastic Pipe Materials.

1.05 QUALITY ASSURANCE

A. All plastic pipe and fittings of each type shall be furnished by a single manufacturer who is experienced in the manufacture of the items to be furnished; however, it shall not be a requirement that the pipe and fittings be manufactured by the same manufacturer, provided that the pipe and fittings are compatible in all respects. The pipe and fittings shall be

designed, constructed and installed in accordance with the best practices and methods and shall be suitable for the intended service.

B. Each pipe production run shall meet or exceed the test requirements for materials, workmanship, burst pressure, flattening and extrusion quality defined in AWWA C900 and as specified herein.

1.06 DELIVERY AND HANDLING

A. Marking

1. Pipe and fittings shall have markings that will remain legible after normal handling, and storage and installation. The markings shall be printed indelibly in ink or molded thereon in a manner that will not reduce the strength of any component.

2. Markings on straight lengths of pipe shall include all those required under AWWA C900, excepting that the testing seal for potable-water service is not required. Markings shall include, at a minimum, the following:

   a. Pipe designation (PVC)

   b. Nominal diameter and dimension ratio

   c. Pressure rating and manufacturing standard (AWWA C900)

   d. Manufacturer's name or trade mark

   e. Marking on spigot end for depth of stab.

   f. Second mark on spigot end to indicate a depth of stab which will initially bottom out the spigot against the bell end of the adjoining pipe piece. This mark may be placed in the field with an indelible marker or paint which will be clearly visible following the pipe assembly process. Should the pipe be marked by anyone except for the manufacturer, the depth of the mark shall be approved by the Owner.

B. Delivery, Handling and Storing

1. All pipe and fabricated fittings shall, unless otherwise specified, be prepared for standard commercial shipment. Plastic pipe shall be transported in a vehicle having a bed long enough to provide support for the full length of the pipe. Any length of pipe or fitting that has been damaged or distorted shall be replaced.

2. Care shall be exercised in handling, loading, unloading and storing pipe to avoid distortion, scratches, gouges, dents and in particular, scuffing of the ends. All plastic pipe shall be stored under cover in a flat, horizontal position, and protected from the sun and all elements until ready for installation.

PART 2 - PRODUCTS

2.01 MATERIALS

A. PVC pipe and fittings shall not be supplied or manufactured by JM Eagle or any of its parent or subsidiary companies.

B. Poly Vinyl Chloride (PVC) Gasketed Pipe and Fittings

1. PVC Pipe and fabricated fittings shall be pressure rated and manufactured from PVC compounds meeting ASTM D1784, Class 12454-B and shall qualify for a design basis of 4,000 psi at 73.4^{o} F per the requirements of PPI TR-3.

2. All PVC pipe and fittings shall be Class 150, with a minimum dimension ratio of 18 unless otherwise shown as having a higher pressure class or lower dimension ratio on the Drawings.

3. Fittings shall be fabricated from PVC pipe meeting ASTM D1784, Class 12454-B.

4. Joints: Bell-end pipe and fabricated fittings designed for making PVC joints using elastomeric gaskets to affect the pressure seal shall meet requirements of ASTM D3139.

5. Gaskets and lubricants: Gaskets and lubricants for PVC pipe and fittings shall be made from materials that are compatible with the pipe and with each other.

6. Elastomeric gaskets: One gasket shall be furnished with each bell end of pipe, fitting and coupling. Elastomeric gasket shall meet the requirements of ASTM F477.

7. The pipe shall be manufactured in the USA by an ISO 9001 certified manufacturer.

8. All pipe shall be stored indoors after production at the manufacturing site until shipped from the factory.

9. PVC pipe shall be manufactured in strict accordance to the requirements of ASTM D2122 for physical dimensions and tolerances.

B. Flanged Joints

1. Where flanged joints are shown on the Drawings, they shall be supplied with gaskets in accordance with Section 02644.

2. Flange bolt spacing, number and dimensions shall conform to the requirements of Section 02644. Two-piece sleeved flanges (Van Stone type) shall not be acceptable.
3. Bolts, nuts and washers for flanged joints shall be in accordance with Section 02644.

C. Fittings, specials, unions and flanges shall be of the same schedule number and manufactured of the same materials as the pipe. Whenever unions are called out on the Drawings, flanged connections may be substituted, provided that dimensional controls do not preclude use of flanges.

D. Expansion joints for PVC sizes 0.5 inches to 6-in shall be telescoping type as manufactured by Plastinetics, Inc.; ASAHI/America or equal. Expansion in pipes smaller than 1/2 inch shall be accommodated with expansion loops.

PART 3 - EXECUTION

3.01 INSTALLATION OF GASKETED PVC PRESSURE PIPE AND FITTINGS

A. The installation of PVC pipe shall be strictly in accordance with the manufacturer's technical data and printed installation instructions, AWWA C605, and as specified herein. Where differences are found, the strictest requirement shall apply.

B. Laying and jointing of pipe shall conform to AWWA C605, except as specifically modified or supplemented herein. Pipe shall be on a prepared bed as indicated in the Contract Documents and as specified in Section 02220.

C. Rubber Gasket Joints shall be used for coupling sections of pipe and for making connections to fittings. Rubber gaskets and the design of the fittings used in the joints shall be such as to produce water-tightness for the conveyance of water at pressures shown on the Drawings.

D. Laying PVC Pipe

1. The pipe, including fittings for pipelines, shall be laid to the line and grades shown on the Drawings or as ordered. Departure from and return to established alignment and grades shall not exceed 1/16 inch per foot of pipe with a total of not more than 1 inch departure.

2. The use of cast iron, ductile iron, or steel fittings is not allowed in lieu of PVC fittings unless approved by the Owner.

3. Long radius curves may be constructed by bending of the pipe. No deflection at the joints will be allowed. The minimum radius shall be the larger of 400 times the nominal diameter of the pipe or as recommended by the pipe manufacturer.

4. When PVC pipe is in place and before backfilling, the pipe detection system shall be installed per the Drawings and Section 13510.

E. Install concrete thrust blocks where indicated in the Contract Documents.

F. Backfill material and backfilling of pipe trenches for PVC pipe shall be performed in the same manner as the main pipeline and in accordance with Section 02220 unless otherwise

shown on Drawings. Backfill material shall be placed carefully on each side of the pipe simultaneously in such manner as to prevent disturbing or damaging the pipe joints.

G. Where plastic pipe passes through wall sleeves, the space between the pipe and sleeve shall be sealed in accordance with Standard Drawing No. 704 or as indicated on the Drawings.

END OF SECTION

TECHNICAL PROVISIONS

SECTION 02642

SMALL VALVES AND PIPES

PART 1 - GENERAL

1.01 SCOPE OF WORK

A. Furnish all labor, materials, equipment, appurtenances and incidentals required for project small valves and pipes 3 inches and smaller, complete as specified in the Contract Documents.

1.02 RELATED WORK

A. Surface Preparation and Shop Painting and Coating are included in Section 09910.

B. Field Painting and Protective Coating are included in Section 09920.

C. Petrolatum Tape and Petroleum Wax Tape Coatings are included in Section 09930.

1.03 SUBMITTALS

A. Submit to the Engineer, in accordance with Section 01300, a list of materials to be furnished, equipment data and details, instruction manuals, the names of the suppliers and additional information as specified herein.

1.04 REFERENCE STANDARDS

A. American Society of Mechanical Engineers (ASME)

1. B16.22 – Wrought Copper and Cooper Alloy Solder Joint Pressure Fittings

2. B16.26 – Cast Copper Alloy Fittings for Flared Copper Tubes

B. American Society for Testing and Materials (ASTM)

1. ASTM B43 – Standard Specification for Seamless Red Brass Pipe, Standard Sizes

2. ASTM B88 – Standard Specification for Seamless Copper Water Tube

C. United States Department of Defense (USDoD)

1. A-A-59326 – Coupling Halves, Quick Disconnect, Cam-Locking Type

PART 2 - PRODUCTS

2.01 MATERIALS

A. Small Valves – Small valves 3 inches in diameter and smaller, unless otherwise specified on Drawings, shall conform to the following:

1. Ball Valves shall be constructed of stainless steel with PTFE and packing. Valves shall have lever handles. Ball valves shall be Stockham T-2852-SSR-66 or approved equal.

2. Valve Materials. Valve shall be so designed that no metals other than stainless steel shall come in contact with the water.

3. Pipe Nipples. Pipe nipples shall be Schedule 40 stainless steel, Type 304.

B. Quick-Connect Couplings. Quick connect couplings shall be of the cam and groove type consisting of a male adapter conforming to USDoD Specification A-A59326. Male adapters shall be 316 stainless steel and designed to receive a female coupler without requiring threading, bolting, or tools. Connections shall remain tight and leakproof under pressures up to 300 psig. Each adapter shall be furnished with a dust cap complete with an 18-inch long security chain of corrosion resistant material. Coupling shall be as manufactured by Dover Corporation, Ever-tite, or equal.

C. All pipe shall be continuously and permanently marked with manufacturer's name, type of material, size, pressure rating, and where applicable, ASTM#, ANSI, or UL, listing. On plastic pipe, date of extrusion must also be so marked.

D. Brass Pipe – Brass Pipe shall be standard sizes, extra strong. Fittings shall be extra strong, conforming to ASTM B43.

E. Bushings – Threaded bushings shall be provided to isolate dissimilar metals from direct contact to each other. Bushings used shall meet all other requirements specified herein. Whether shown or not on the Drawings or Standard Drawings, bushings shall be provided at no additional cost to the Owner.

F. Copper Pipe Schedule Number: Description

P-1 Copper drainage tube, underground, Type L hard, ASTM B88 (current issue) by Mueller Brass, Cerrobrass, or approved equal. Used inside structures for pressure water control, meter, and miscellaneous piping. Connection shall be made with soldered “sweat” type fittings, conforming to ASME B16.22 using 95-5 tin-antimony or 95-5 lead-tin solder as specified therein. Type P-4 copper tubing shall be used between instruments and their isolation valves.

P-2 Copper drainage tube, inside structure and above ground. Type DWV hard, ASTM B306, by Mueller Brass, Anaconda, Cerrobrass, Cambridge-Lee Halstead, or approved equal. Used for underground non-pressure waste drainage.

P-3 Copper water tube, Type L soft, ANSI H23.1, ASTM B88, IAPMO IS. Mueller Brass, Cambridge-Lee Halstead, or approved equal. Used inside structures where flexibility for installation is required as shown on the Drawings or approved by the Engineer.

P-4 Copper water tube, Type K hard, ANSI H23.1, ASTM B88, IAPMO 1S, by Mueller Brass, Cerrobrass, Cambridge-Lee Halstead, or approved equal. Fittings shall be flared type conforming to ASME B16.26. Used aboveground and buried for pressure water service piping, 2-inch and smaller AVARV piping, and all long run piping.

Type of copper pipe or tube used shall be as indicated above unless otherwise specified or shown on the Drawings.

G. Pipe Fittings Schedule Number: Description

PF-1 Cast brass drainage fittings ASA B16.23, ASTM 145-4B for use with copper drainage tube, P-2. Mueller Brass, Nibco, Stanley Flagg or Lee Brass.

PF-2 Wrought copper - solder type ANSI B16.22 for use with P-1, P-3 and P-4 by Mueller Brass, Nibco or Lee Brass.

Note: Pipe, solder, and flux shall be "lead free" for drinking water.

H. Pipe Isolator Schedule Number: Description

PLA-1 Pipe isolator absorption pad shall be not less than 1/2" thick, unloaded. Pad shall completely encircle pipe and shall be model Trisolator as manufactured by Elmdor Stoneman, model PR-Isolator as manufactured by Potter-Roemer, or an approved equivalent. Pipe isolators shall be installed at every pipe hanger and pipe support.

I. Unions:

1. Unions shall be furnished and installed in accordance with following requirements (unless flanges are used instead):

   a. At each threaded or soldered connection to all equipment and tanks, whether indicated or not.

b. At downstream, threaded connection to each manually operated threaded valve and cock, and each threaded check valve, and except those in yard boxes or access boxes, whether indicated or not.

c. At each threaded connection to all threaded automatic valves such as reducing valves, whether indicated or not.

2. Unions shall be located so that piping can be easily disconnected for removal of equipment, tank or valve.

PART 3 - EXECUTION

3.01 EXPOSED VALVE INSTALLATION

A. Exposed valves and specials shall be installed true and plumb as indicated. Coordinate operator locations as indicated. Provide pipe supports at piping locations as indicated and as necessary and adjust to provide firm and substantial support throughout the piping system.

B. Provide valve drains and appurtenances as indicated and as required.

3.02 TESTING

A. Testing of small valves shall be in conjunction with testing of the water main as specified in Section 02660. Operation shall be satisfactory to the Owner in all respects.

3.03 PAINTING AND PROTECTIVE COATINGS

A. Exterior protective coating material and application shall be in accordance with Sections 09910, 09920 and 09930.

END OF SECTION

TECHNICAL PROVISIONS

SECTION 02644

PIPE APPURTENANCES

PART 1 - GENERAL

1.01 SCOPE OF WORK

A. Furnish all labor, material, tools, equipment and incidentals required to furnish, install and test pipe appurtenances.

1.02 RELATED WORK

A. Steel Pipe and Fittings are included in Section 02620

B. HDPE Pipe and Fittings are included in Section 02623.

B. Small Diameter PVC Pipe and Fittings are included in Section 02625.

C. Surface Preparation and Shop Painting and Coating are included in Section 09910.

D. Field Painting and Protective Coating are included in Section 09920.

E. Petrolatum Tape and Petroleum Wax Tape Coatings are included in Section 09930.

F. Butterfly Valves are included in Section 11262.

G. Plug Valves are included in Section 11264.

1.03 SUBMITTALS

A. Submit to the Engineer, as provided in Section 01300, supplier information, and complete detailed Shop Drawings showing materials, properties and details of fabrication, construction and installation.

1.04 REFERENCE STANDARDS

A. American Society of Mechanical Engineers (ASME)

1. B16.1 - Cast Iron Pipe Flanges and Flanged Fittings Classes 25, 125, and 250

2. B16.5 - Pipe Flanges and Flanged Fittings NPS 1/2 Through NPS 24
3. B18.2.1 - Square and Hex Bolts and Screws (Inch Series)

B. American Society for Testing and Materials (ASTM)

1. A193 - Standard Specification for Alloy-Steel and Stainless Steel Bolting Materials for High-Temperature Service

2. A194 - Standard Specification for Carbon and Alloy Steel Nuts for Bolts for High-Pressure or High-Temperature Service, or Both

C. American Water Works Association (AWWA)

1. AWWA C207 - Steel Pipe Flanges for Waterworks Service-Sizes 4-in Through 144-in (100mm Through 3,600mm)

2. AWWA C213 – Fusion Bonded Epoxy Coating for the Interior and Exterior of Steel Water Pipelines

3. AWWA C219 – Bolted, Sleeve-Type Couplings for Plain-end Pipe

PART 2 - PRODUCTS

2.01 MATERIALS

A. Flanges:

1. Flanges for pipe shall have the minimum class and drillings in accordance with AWWA C207 Class B Table 2 for design pressures to 50 psi, Class D Table 2 for design pressure to 175 psi, and Class E Table 4 for design pressures to 275 psi.

2. Contractor shall be responsible for proper mating of all flanged connections.

3. Flanges shall be flat-faced with serrated finish (32 serrations per inch, 1/64-inch deep, spiral or concentric) and shall be back-faced or spot-faced at bolt holes. Spot facing shall be large enough to accommodate installed washers, nuts, and bolts.

4. Flange bolts shall be stainless steel ASTM A193 Grade B8N with ASTM A194 Grade 8 nuts. Bolts and nuts shall have hexagonal dimensions in accordance with ANSI/ASME B18.2.1. Antisieze compound for stainless steel bolts and nuts shall be of a molybdenum disulfide base such as Molycoat-G or equal.

5. Flange gaskets for flanges Class B and D on pipe of 14-inch diameter and smaller shall be 1/16-inch thick rubber with cloth insertions and for pipe greater than 14-inch diameter shall be 1/8-inch thick rubber with cloth insertions. Flange gaskets for flanges Class E shall be 1/16-inch thick nonasbestos. Gaskets shall be John Crane Co. Style 777, Manville No. 109, or an approved equivalent.

6. Blind flanges shall have gaskets covering the entire inside face of the blind flange and shall be cemented to the blind flange.

B. Grooved Coupling: Grooved coupling shall be made of ductile iron. Grooved coupling shall be designed to accommodate contraction of the pipe and small deflections and shall be manufactured by Victaulic Style 77 or an approved equivalent.

C. Grooved Cap: Grooved cap shall be of ductile iron if tapping or other modifications are not required. If grooved cap is required to be tapped or modified in any manner for installation of valves or other appurtenances, it shall be of stainless steel materials.

D. Flanged Adapters

1. Flanged adapters for joining PVC pipe to a mating steel or cast iron mating flange shall be similar to and tested in accordance with AWWA C219 and be manufactured specifically for the connection of plain end PVC pipe to a mating steel or ductile iron flange.

2. Flanged adapters shall be constructed of stainless steel or ASTM A538 ductile iron.

3. Sleeve, flange, and follower of the flanged adapter shall be coated with fusion bonded epoxy. All other surfaces shall be coated as per Sections 09910, 09920 and 09930.

2.02 THREADED INSULATING CONNECTIONS

A. Threaded insulating bushings, unions, and couplings shall be used for joining threaded pipes of dissimilar metals and for piping systems where corrosion control and cathodic protection are indicated.

B. Threaded insulating connections shall be of nylon, Teflon, polycarbonate, polyethylene, or other non-conductive materials and shall have ratings and properties suitable for the service and loading conditions indicated.

2.03 PIPE THREADS

A. Pipe threads shall comply with ANSI/ASME B1.20.

PART 3 - EXECUTION

3.01 INSTALLATION AND INSPECTION

A. The Contractor shall permit and aid in the inspection of the internal and external coatings of appurtenances at the time of installation and shall repair any damage before assembling such appurtenance.

B. The method of assembly and operation of appurtenances shall be in strict accordance with the manufacturer's instructions.

C. The Contractor shall excavate holes in the trench as required for installation of pipe appurtenances.

D. All appurtenances shall be handled in a manner to prevent any injury or damage to any part of the valve. All joints shall be thoroughly cleaned and prepared prior to installation.

E. Before flanged joints are assembled, the flange faces shall be thoroughly cleaned of all foreign material with a power wire brush. The gasket shall be centered and the connecting flanges drawn up watertight without unnecessarily stressing the flanges. All bolts shall be tightened in a progressive diametrically opposite sequence and torqued with a suitable, approved and calibrated torque wrench. All clamping torque shall be applied to the nuts only.

F. All appurtenances, including flanges and couplings, shall be protected in accordance with Sections 09910, 09920 and 09930.

END OF SECTION

TECHNICAL PROVISIONS

SECTION 02660

PIPELINE TESTING

PART 1 - GENERAL

1.01 SCOPE OF WORK

A. The work of this Section includes flushing and testing of all pressure pipelines and appurtenant piping, complete, including providing test water and all disposal thereof.

1.02 RELATED WORK

A. Steel Pipe and Fittings are included in Section 02620.

B. HDPE Pipe and Fittings are included in Section 02623

C. Pipe Appurtenances are included in Section 02644.

D. Environmental Protection is included in Section 02960.

E. Petrolatum Tape and Petroleum Wax Tape Coatings are included in Section 09930.

F. Butterfly Valves are included in Section 11262.

G. Plug Valves are included in Section 11264.

1.03 REFERENCE STANDARDS

A. APHA, AWWA and WEF Standard Methods for the Examination of Water and Wastewater

B. AWWA C200 – Steel Water Pipe – 6 In. (150 mm) and Larger

C. AWWA M11 – Steel Pipe – A Guide for Design and Installation.

1.04 TESTING SCHEDULE

A. The following shall be submitted:

1. A testing schedule, including proposed plans and locations for water conveyance and discharge, shall be submitted in writing to the Engineer for acceptance. The submittal shall also include the Contractor's plan for the release of water from pipelines after testing has been completed. Contractor will not be allowed to begin testing until the

proposed Testing Schedule has been favorably reviewed (review returned to the Contractor as "Approved" or "Make Corrections Noted"). Testing shall be coordinated with the Owner. Release of water shall be coordinated with the Owner, who will notify the Ventura County Watershed Protection District and Regional Water Quality Control Board. Discharges shall be in accordance with the General Permit for Discharges of Low Threat Hydrostatic Test Water to Surface Waters, which is included in Appendix C.

2. Procedure and equipment to be used for testing electrical continuity.

1.05 SUBMITTALS

A. Shop drawings shall be submitted in accordance with Section 01300 and shall include the following:

1. Test bulkhead locations and design calculations, pipe attachment details, and methods to prevent excessive pipe wall stresses.

2. Methods of bulkheading air vents.

B. Testing Schedule per Paragraph 1.04, including copies of certificates of accuracy from an independent testing laboratory for testing equipment to be used.

PART 2 - PRODUCTS

2.01 MATERIALS REQUIREMENTS

A. All test equipment, temporary valves, temporary blow-offs, temporary bulkheads and blind flanges, temporary manual air release valves or other water control equipment and materials shall be determined and furnished by the Contractor. No materials shall be used which would be injurious to the pipeline or its future function. The Contractor shall be held solely responsible for ensuring that a sufficient water source is available for all operations.

B. Temporary manual air-release valves shall be provided as necessary for pipeline test. The pipe outlet shall be constructed in the same manner as for a permanent air valve and after use, sealed with a blind flange, pipe cap or plug. Coat and wrap all steel parts to remain per Section 09930.

C. Test bulkheads per the Drawings shall be installed at locations which make it possible for the Contractor to test the entire new pipeline before connections to existing pipelines are made. Air-release and water drainage connections shall be included.

D. Potential local potable water sources include the Camrosa Water District.

PART 3 - EXECUTION

3.01 GENERAL

A. All portions of the pipeline shall be hydrostatically tested.

B. The Contractor shall make all necessary arrangements for conveying the water to the points of use.

C. All labor, materials, tools, and equipment for testing shall be furnished by the Contractor. The cost of all testing in this Section shall be borne by the Contractor.

D. All pressure pipelines shall be tested to the test pressure shown on the Drawings. All testing operations shall be performed in the presence of the Owner.

E. Pipeline shall be swept and flushed of deleterious materials such as construction debris, dirt, or rocks prior to hydrostatic testing.

3.02 HYDROSTATIC TESTING OF PIPELINES

A. All hydrostatic testing shall be performed by the Contractor. Testing shall use gauges and meters which have been calibrated and certified by an independent testing laboratory within the previous 12 months. Prior to hydrostatic testing, the interior of all pipelines 24 inches and larger shall be visually inspected for infiltration of groundwater. If infiltration of groundwater is suspected or found, it shall be repaired in a manner satisfactory to the Owner.

B. Internal pipe bulkheads (plugs) may be used and care shall be taken so as not to cause undue force on the walls of the pipe which may damage or deform the pipe during the test.

C. All labor, materials, tools, and equipment for testing shall be furnished by the Contractor. The test shall not be conducted against a closed valve inline to the mainline pipeline. Ends of each test section, open ends of pipes, and fittings shall be suitably closed.

D. Prior to hydrostatic testing, all pipelines shall be flushed and cleaned. The Contractor shall test all pipelines either in sections or as a unit to the minimum test pressure indicated on the Drawings. No section of the pipeline shall be tested until all concrete or mortar placed against pipes being tested has attained an age of 7 Calendar Days.

E. The test shall be made by placing temporary bulkheads as required and filling the line slowly with water. The Contractor shall be responsible for ascertaining that all test bulkheads are suitably restrained to resist the thrust of the test pressure without damage to, or movement of, the adjacent pipe. Any unharnessed joints, couplings, expansion joints, or other sliding joints shall be restrained or suitably anchored prior to the test, to avoid movement and damage to piping and equipment. Any temporary concrete or restraints

used for purposes of the hydrostatic test shall be removed following successful hydrostatic test.

F. The pipeline shall be filled at a rate which will not cause any surges or exceed the rate at which the air can be released through the air valves at a reasonable velocity and all the air within the pipeline shall be properly purged. The pipeline shall be filled at a rate such that the average velocity of flow is no greater than 1 fps. At no time shall the maximum velocity of flow exceed 2 fps.

G. All air shall be purged from the pipeline before checking for leaks or performing pressure tests on the system. To accomplish this, if air valves or hydrants or other outlets are not available at high points, taps shall be made to expel the air, and these taps shall be tightly plugged after testing.

H. Pipe Leakage Allowance:

1. Steel Pipe: The hydrostatic and leakage test will be a 2 hour test in accordance with AWWA M11 during which a measured amount of make-up water may be added to the pipeline to maintain the test pressure. The total allowed make-up water during the test phase for the 30-inch welded steel pipe is 0.237 gallons per hour, per 100 feet of pipe installed. Sufficient water shall be added to maintain the test pressure. No leakage shall be allowed during testing of individual joints.

2. HDPE Pipe: The hydrostatic and leakage test will be a 5 hour test. The pipe shall be pressurized to the test pressure and allowed to expand through the first 4 hours. During the last 1 hour, the pressure shall be monitored. A drop in pressure of less than 5 percent of the test pressure indicates a successful test. The use of make-up water is not allowed during the last hour of the test.

I. During the test period, bulkheads, valves, and connections shall be examined for leaks. If leaks are found, corrective measures satisfactory to the Owner shall be taken.

J. If a large quantity of water is required to increase the pressure during the steel pipe testing or a larger pressure drop is indicated during the HDPE testing expansion period, entrapped air, leakage at joints, or a broken pipe may be suspected. TESTS SHOULD BE DISCONTINUED until the source of trouble is identified and corrected.

K. If the required make-up water during the steel pipe test phase is greater than allowed or a larger than allowed pressure drop is indicated during the HDPE pipe test phase, then leakage of the system will be assumed to be occurring. In the case of pipelines that fail to pass the prescribed leakage test, the Contractor shall determine the location(s) and cause(s) of the leakage, shall take corrective measures necessary to repair the leaks, and shall again test the pipelines. In the case of pipelines that fail to pass the prescribed leakage test, the Contractor, at his own expense, shall determine the cause of the leakage, shall take corrective measures necessary to repair the leaks, and shall again test the pipelines, including but not limited to, excavating as necessary to locate and repair leaks or other defects which may develop under test, replacing such excavated material, and making all

repairs necessary to secure the required watertightness. The pressure test shall be repeated until the pipe meets test requirements. The cost of all water used in both testing and retesting shall be paid by the Contractor.

L. After satisfactory test, water shall be drained and temporary test bulkheads and other test facilities removed.

M. Test water shall be disposed of in accordance with the requirements of the Contract Documents and the requirements of Low Threat Hydrostatic Test Water to Surface Waters permit, which is included in Appendix C. Water shall be dechlorinated such that the chlorine residual is less than 0.1 mg/l prior to discharge. The Contractor shall take field tests for chlorine residual at least once every half-hour at each point of discharge to confirm that the water contains less than 0.1 mg/L chlorine residual.

END OF SECTION

This page intentionally left blank.

TECHNICAL PROVISIONS

SECTION 02700

PRECAST CONCRETE MANHOLES AND BOXES

PART 1 - GENERAL

1.01 SCOPE OF WORK

A. The work of this Section includes providing precast concrete manholes for access manhole structures, blow offs, and related appurtenances.

1.02 RELATED WORK

A. Earthwork is included in Section 02200.

B. Cast-in-Place Concrete is included in Section 03300.

C. Metal Fabrications are included in Section 05500.

D. Waterproofing is included in Section 07900.

1.03 REFERENCE STANDARDS

A. American Society for Testing and Materials (ASTM)

1. ASTM A48 Specification for Gray Iron Castings

2. ASTM C478 Specification for Precast Reinforced Concrete Manhole Sections

1.04 SUBMITTALS

A. The following shall be submitted in compliance with Section 01300:

1. Design calculations and detailed drawings of manhole component sections.

2. Shop drawings of cast iron frames, grates and covers, steel grates and covers, and all appurtenances.

PART 2 - PRODUCTS

2.01 PRECAST SECTIONS

A. Precast concrete manhole risers, grade rings, tops, and base sections and precast concrete boxes shall be designed and constructed in accordance with the requirements of ASTM C478.

B. Mortar for joining manhole and box sections shall consist of 1 part cement to 2-1/2 parts of sand by volume.

C. Exterior of manhole shall have waterproofing applied in conformance with Section 07900.

D. Minimum wall thickness of any precast structure shall be 6 inches. Minimum wall thickness of precast rectangular structures with any inside plan dimension of 5 feet or greater shall be 8 inches.

2.02 FRAMES AND COVERS

A. Manhole frames and covers shall be non-rocking and shall conform to the requirements of ASTM A48, Class 30. Unless otherwise indicated, manhole frames and covers shall be vandal proof and heavy-duty cast iron type with 42-inch opening. Manhole cover insert shall be as shown on Standard Drawings Nos. 603 and 707 with lettering identifying the Calleguas Municipal Water District (reference Paragraph 2.06 in Section 05500).

Imported covers, cover inserts, and frames shall have the country of origin marking in compliance with Federal regulations.

B. Cast iron grates and frames shall conform to the requirements of ASTM A48, Class 30.

C. Steel grates, covers and frames shall be galvanized and conform to the requirements of Section 05500.

2.03 MANUFACTURERS

A. Products shall be manufactured as shown on the Standard Drawings, or if not indicated, by one of the following (or equal):

1. Manhole Sections: Ameron; Precon; Utility Precast, Inc.

2. Boxes: Utility Precast, Inc.; Brooks Products, Inc.; Jensen Precast

3. Frames and Covers: Alhambra Foundry; Neenah Foundry Co.; Vulcan Foundry, Inc.

4. Warning Sign: W.H. Brady Company; Seton Nameplate Corporation

PART 3 - EXECUTION

3.01 INSTALLATION

A. Precast concrete manholes and boxes shall be installed in strict conformance with the manufacturer's written instructions and additionally as shown on the Standard Drawings and Drawings.

B. Manhole and box foundations shall be installed “in the dry” condition on 6 inches of Caltrans Class II aggregate base material compacted to 95% relative density unless shown otherwise on the Drawings.

C. Manhole and box joints for joining sections shall be mortared both inside and outside.

D. Where pipe penetration sleeves or flanges are required, they shall be cast into the manhole structure at the same time that portion of the structure is being cast. Coring of walls will not be allowed for placement of penetration sleeves or flanges. Should the Contractor be unable to have the pipe penetration sleeves or flanges cast with the manhole structure, then the Contractor shall cast in place the portion of wall which has the penetration. The cast in place portion shall be a complete segment or ring of the structure and least 6 inches above and below the furthest extents of the penetration sleeve or flange.

3.02 INSPECTION

A. Upon request, the Contractor shall provide the Owner adequate ventilation and a workman with ladder or other safe and adequate means for inspection access.

END OF SECTION

This page intentionally left blank.

TECHNICAL PROVISIONS

SECTION 02820

LANDSCAPING

PART 1 - GENERAL

1.01 SCOPE OF WORK

A. The work of this Section includes providing landscaping and all appurtenant work to restore disturbed areas to original condition or to a condition specified herein.

B. Landscaping as referred to herein shall include soil preparation, installation of headers, weed control, finish grading, furnishing and installing seeds, plant materials, tree staking and tying, and all other pertinent work as required and as indicated.

1.02 RELATED WORK

A. Earthwork is included in Section 02200.

B. Granular and Rock Materials are included in Section 02230.

1.03 STANDARD SPECIFICATIONS

A. Except as otherwise indicated in this Section of the Specifications, the Contractor shall comply with the Standard Specifications for Public Works Construction (SSPWC).

1.04 CODES

A. The work of this Section shall comply with the current editions, with revisions, of the following codes:

1. Agricultural Code of the State of California

1.05 SPECIFICATIONS AND STANDARDS

A. Except as otherwise indicated, the current editions of the following apply to the work of this Section:

1. Commercial Standards:

ANSI/ASTM D 422	Method for Particle-Size Analysis of Soils
ANSI Z60.1	Nursery Stock

American Association of Nurserymen, Inc.	Rules and Grading Provisions

1.06 SHOP DRAWINGS

A. The following shall be submitted:

1. Vegetation. Type of vegetation to be installed.

2. Vegetation establishment plan. Plan shall include detail on how vegetation will be irrigated for the guarantee period or as indicated in this Section.

3. Hydroseed mix, including application rate, seed type percentages, mulch, fertilizer, etc.

1.07 CERTIFICATES TO BE FURNISHED WITH EACH DELIVERY OR SHIPMENT

A. Certificates of inspection of plant material concerning plant diseases and infestations, as required by federal, state, or other authorities having jurisdiction, shall be furnished with each shipment.

1.08 INSPECTION

A. All indicated inspections will be made by the Owner and the agency having jurisdiction. The Contractor shall request inspection at least 24 hours in advance of the time inspection is required. Inspection will be required on the following stages of the work:

1. Following finish grading and application of soil amendments, if required.

2. When all specified planting work in an area has been completed.

3. Final inspection at the completion of the maintenance period.

B. Plants and seeds will be subject to inspection and approval or rejection by the Owner and the agency having jurisdiction at the place of growth and upon delivery to the Site at any time before and during progress of the Work. Plants and seeds will be inspected for:

1. Quantity, quality, size, and variety;

2. Latent defects and injuries resulting from handling, disease, and insects.

C. Plants approved at the place of growth shall be rejected at the Site if found to have degraded ball and root conditions or latent defects and injuries.

D. Rejected plants shall be identified in an obvious manner, removed from the Site and replaced with acceptable equals.

1.09 CLEANUP

A. Upon completion of planting operations in any area, the portion of the Site used for a work by the Contractor shall be cleaned of all debris, superfluous materials, and equipment.

B. All walks or pavement with open access to the public shall be swept or washed clean daily and again upon completion of the planting work.

C. Overspray from hydroseeding shall be thoroughly cleaned from all surfaces during or immediately upon completion of hydroseeding.

D. During the Work, plant containers that have been cut or removed from plant materials shall be removed from the Site daily.

1.10 DELIVERY, STORAGE, AND HANDLING

A. Plants shall not be pruned prior to delivery except upon approval by the Owner and the agency having jurisdiction.

B. If plants delivered to the Site are not immediately planted, the Contractor shall protect the stock in a temporary nursery where it shall be protected from sun and drying winds and shall be shaded, kept moist, and protected with damp soil, moss, or other material. Plants shall be planted within 2 Working Days after delivery.

C. Fertilizers, additives, seed, peat, etc. subject to moisture damage shall be kept in a weatherproof storage place to preserve dryness.

PART 2 - PRODUCTS

2.01 GENERAL

A. Landscaping materials shall conform to the requirements of SSPWC Subsection 212-1 and the requirements of this Section of the Specifications.

B. All landscaping materials for soil conditioning, weed abatement, or planting shall be first-grade, commercial quality. If requested by the Owner, submit certificates indicating the source of material, analysis, quantity, or weight attached to each sack or container or provided with each delivery. Delivery certificates, if requested by the Owner, shall be given to the Owner as each shipment of material is delivered.

C. All plants furnished by the Contractor shall be true to type or name as the original plant it is to replace and shall be tagged in accordance with the standard practice recommended by the Agricultural Code of the State of California.

2.02 TOPSOIL

A. Exiting Improved Landscaped Areas. The topsoil in existing improved landscape areas shall be the same soil recovered from the area during excavation and be free of roots, clods, stones larger than 1-inch in the greatest dimension, pockets of coarse sand, noxious weeds, sticks, lumber, brush and other litter. Topsoil shall be friable and have sufficient structure in order to give good tilth and aeration to the soil.

B. Existing Native/Unimproved Areas. The topsoil in existing improved landscape areas shall be the same soil recovered from the area during excavation or be imported topsoil and be free of roots, clods, stones larger than 1-inch in the greatest dimension, pockets of coarse sand, noxious weeds, sticks, lumber, brush and other litter. Topsoil shall be friable and have sufficient structure in order to give good tilth and aeration to the soil.

2.03 FERTILIZERS AND ADDITIVES

A. Fertilizer shall be furnished in bags or other standard containers with name, weight, and guaranteed analysis of contents clearly marked thereon.

2.04 ORGANIC SOIL AMENDMENT

A. Organic soil amendment shall be Type 2 complying with SSPWC Subsection 212-1.2.4.

2.05 MULCH

A. Mulch ground cover shall be Agromin ES-2 or an approved equivalent. A 2" mulch blanket shall be spread evenly over planting areas but not in vehicular travel paths, hydroseed or sod areas.

2.06 PLANTS

A. Plants furnished for replacement of existing plants shall be the same as existing and comply with SSPWC Subsection 212-1.4 and shall meet requirements of the agency having jurisdiction and these Specifications. Plants shall be in accordance with the botanical names and applicable standards of quality, size, condition, and type. They shall be true to name, genera, species, and variety in accordance with reference publications.

B. No trees will be accepted with their leaders cut, or so damaged that cutting is necessary.

C. Plants shall be healthy, vigorous and free from plant disease, shall be well-branched, shall have full foliage when in leaf, and shall have a healthy, well-developed normal root system. Cold storage plants will not be accepted.

D. Trees shall comply with SSPWC Subsection 212-1.4.2 and shall have straight trunks and all old abrasions and cuts shall be completely callused over. In no case shall trees be topped before delivery.

2.07 HYDROSEED

A. Hydroseed shall be a non-irrigation mulch mix of 89% native shrubs, 10% native grass and 1% wildflowers as provided by Quality Hydroseeding & Restoration or an approved equivalent. Non-irrigation mulch mix is intended to be planted with irrigation to establish seeded plants.

B. Following establishment of plants by the Contractor, hydroseeded areas will not have irrigation. Plant seeds for the hydroseed mix shall be selected to be drought tolerant and suited for the geographic area planted.

C. Hydroseed mix shall have a dark contrasting color to the area being hydroseeded. Color shall be such that adequate coverage of the hydroseeded area can be visually inspected for approval.

2.08 SOD

A. Sod shall be the same as removed and as approved by the agency having jurisdiction. Grass seeds, stolons or hydroseeding shall not be used to resurface areas with existing sod.

2.09 MISCELLANEOUS MATERIALS

A. Use plastic edging with tubular top edge or if replacing existing edging, use identical type of edging as removed, where edging is required.

B. Jute mesh shall be new and shall be of a uniform, open, plain-weave, flame-retardant mesh. The mesh shall be natural brown-tan and shall be made from unbleached single jute yarn. The yarn shall be of loosely twisted construction and shall not vary in thickness by more than 1/2 its normal diameter. Jute mesh shall be furnished in rolled strips and shall meet the following requirements:

1. Width - 48 inches, with a tolerance of one inch wider or narrower.
2. Not less than 78 warp ends per width.
3. Not less than 41 weft ends per yard.
4. Weight shall average 1.22 pounds per linear yard, with a tolerance of 5 percent heavier or lighter.

2.10 MANUFACTURERS

A. Landscaping materials shall be of the following brand names (or equal):

1. Fertilizer tablets: "Agriform" or "Leslie"

2. Erosion control blanket: "Curlex" by American Excelsior Company

PART 3 - EXECUTION

3.01 GENERAL

A. Landscape work shall be performed in compliance with SSPWC Section 308 and as indicated herein.

B. The landscape work shall not be performed at any time when it may be subject to damage by climatic conditions.

C. Prior to removal of existing vegetation in improved landscape areas, the Contractor shall identify the area of removal and inventory plants to be removed. Inventory list shall contain both name of plant and quantity to be removed and be submitted to the Owner and agency having jurisdiction for approval. No removal of plants will be allowed until approval from the Owner and agency having jurisdiction is obtained by the Contractor.

D. Any failed areas of seeding or sodding or death of any plants during the guarantee period shall be cause for the Contractor to replant the failed areas at no additional cost to the Owner.

3.02 SOIL PREPARATION

A. Landscaping shall not begin until all areas of settlement, erosion, rutting, etc., have been repaired, and the soils have been re-established, recompacted, and refinished to finish grades.

B. Areas requiring grading, including adjacent transition areas, shall be uniformly level or sloping between finish elevations to within 0.10-foot above or below required finish elevations.

C. Landscaping shall not proceed until after walks, curbs, pavings, edging, and irrigation systems are in place. Other work shall be completed to a degree where the landscape areas will not be disturbed when the other work is completed. The subgrade shall be cleaned free of waste materials of all kinds.

D. During grading, waste materials in the planting areas such as weeds, rocks 2 inches and larger, building materials, rubble, wires, cans, glass, lumber, sticks, etc. shall be removed from the Site. Weeds shall be dug out by the roots in improved landscape areas.

E. After removal of waste materials the planting areas subgrade shall be scarified and pulverized to a depth of not less than 6 inches and all surface irregularities below the cover of topsoil removed.

F. Finish grading shall consist of:

1. Placing all soil additives and fertilizers.

2. Making minor adjustment of finish grades as directed by the Owner and agency having jurisdiction.

G. Any unusual subsoil condition that will require special treatment shall be reported to the Owner.

H. Topsoil shall be uniformly distributed over all areas where required. Subgrade and topsoil shall be damp.

I. Surface drainage shall be provided as shown by molding the surfaces to facilitate the natural run-off of water. Low spots and pockets shall be filled with topsoil and graded to drain properly.

J. Finish grade of all planting areas shall be 1 inch below finish grades of adjacent pavement of any kind.

K. Jute mesh shall be installed loosely up and down 4:1 or greater slopes. The installed mesh shall fit the soil surface contour and shall be held in place by 12-inch long, 11-gauge (minimum) steel wire staples driven vertically into the soil at approximately 24-inch spacing. Jute mesh strips shall overlap along the sides at least 6 inches. Ends of strips shall be buried into the soil at least 6 inches. Staples shall be driven into side overlap at 2 points per side overlap.

3.03 PROTECTION AND HANDLING OF PLANTS

A. Plants shall be planted on the day of delivery, if possible.

B. Plants shall not be picked up or moved by stem or branches, but shall be lifted and handled from the bottom or sides of the containers.

C. Plants shall be lifted and handled from the bottom of the ball. Plants with balls cracked or broken before or during planting operations will not be accepted and shall be immediately removed from the work site.

3.04 PROTECTION AND HANDLING OF SOD

A. Sod shall be placed the same day as delivery and shall not be allowed to dry out.

B. Addition, type, and frequency of sod fertilizing shall be in accordance with the suppliers or manufacturer's recommendations.

C. Sod bare areas or voids under sod between the sod and finished ground shall not be allowed.

3.05 TREE AND PLANT LOCATIONS

A. The Contractor shall locate and stake all tree and shrub locations and have the locations approved by the Owner and agency having jurisdiction before starting excavation for same. The plant locations shall be observed, and their locations shall be adjusted as directed by Owner or agency having jurisdiction before final approval.

B. No trees shall be located closer than 72 inches to structures unless otherwise indicated. Ground covers and shrubs may be planted up to structures or curbs.

3.06 PLANT PITS

A. Plant pits, centered on location stakes, shall be excavated circular pits with vertical sides and flat or saucer shape bottom in accordance with the following sizes unless shown otherwise:

1. Depth shall equal that of the soil in the conatiner. Width will be twice as wide as the container soil.

3.07 PREPARED BACKFILL

A. Tree and shrub pit backfilling soil shall consist of 4 parts topsoil, and 1 part peat or soil-aid by volume. Commercial fertilizer shall be mixed with the prepared topsoil, using 5 lb/cu yd or as required by manufacturer's printed recommendations.

B. Planting pit, bin, and trench filling and bedding soil shall consist of 4 parts by volume topsoil mixed with 1 part manure and 5 lb of commercial fertilizer per cubic yard. Specification applies to import and on-site soil.

C. Materials shall be thoroughly rotary-mixed on the Site before placement. Mixing of additives in pits, bins, trenches or beds will not be permitted.

D. Tree and shrub pits shall be provided with fertilizer tablets as follows:

1 per one-gallon can plant
3 per 5-gallon can plant
5 per 15-gallon can plant

3.08 ROCKS OR UNDERGROUND OBSTRUCTIONS

A. In the event that rock or underground obstructions are encountered in the excavation of plant pits, alternative locations shall be selected by the Owner or agency having jurisdiction. Moving of trees to alternative locations shall not be reason for Extra Work.

3.09 SETTING PLANTS, SHRUBS AND TREES

A. The soil shall not be worked when the moisture content is so great that excessive compaction will occur, nor when it is so dry that dust will form or that clods will not break readily. Water shall be applied if necessary to provide ideal moisture for filling and for planting as herein indicated.

B. Plants shall be set in center of pits as indicated. They shall be set plumb and straight and at such a level that after settlement the crown of the plant will be 2 inches above the finished grade.

C. All ground cover plants shall be evenly spaced, staggered in rows, and set at the intervals indicated, so as to produce a uniform effect. Plants shall be watered immediately after planting operations have been completed.

D. All shrubs and vines shall be pruned to remove damaged branches. All bare root shrubs shall be pruned and shaped to compensate for transplant root loss.

E. Planting soil around roots or balls shall be thoroughly compacted and watered. After planting, the soil in the shrub beds shall be cultivated between shrubs, raked smooth, and neatly outlined. Muddy soil shall not be used for backfilling. All broken or frayed roots shall be properly cut off.

F. Trees and shrubs on slopes steeper than 6 to 1 shall be provided with watering dams or berms.

G. All trees shall be thoroughly watered immediately after planting.

3.10 STAKING AND GUYING

A. Staking of trees shall be done immediately after they are planted. Plants shall stand plumb after staking.

3.11 PRUNING AND MULCHING

A. Each tree and shrub shall be pruned in accordance with standard horticultural practice to preserve the natural character of the plant in the manner fitting its use in the landscape design, as approved by the Owner.

B. All dead wood or suckers and all broken or badly bruised branches shall be removed by thinning out and shortening branches. Deciduous bare-rooted plants shall have not less than 1/3 of their respective leaf surfaces removed. All cuts shall be made just above a healthy bud. Pruning shall be done with clean, sharp tools.

C. Plants shall be mulched after planting and cultivating have been completed. A layer of mulch materials shall be spread on the finished landscaping grade within all

planting areas to a depth of 4 inches. The mulch around isolated plants shall be 6 inches greater in diameter than the planting hole. All shrub and ground cover beds shall be completely covered with the mulch.

3.12 HYDROSEEDING

A. Area to be hydroseeded shall be thoroughly saturated prior to hydroseeding and allowed to dry to provide residual moisture in the top 1/4-inch of the surface.

B. Hydroseed shall be placed in accordance with the supplier's or manufacturer's recommendations.

C. Spray the area with a visible uniform coat, leaving no bare patches.

D. Hydroseed slurry shall not be allowed to be in the machine for more than two hours or shorter as recommended by the supplier or manufacturer. Any hydroseed slurry allowed to be stored for longer than specified will not be considered adequate for hydroseeding and shall be removed from the Site and disposed or amended in accordance with the recommendations of the supplier or manufacturer. Such amendment can include the addition of a minimum of 50% more seed mix.

3.13 MISCELLANEOUS ITEMS

A. Watering in existing irrigated areas shall be continued by the existing irrigation system. Contractor shall adjust, repair, or replace irrigation system components as required to ensure proper irrigation of new plants.

B. In areas where there is no existing irrigation, Contractor shall, through his own efforts, be responsible for the delivery of water to the area to be irrigated through the guarantee period. Owner will not provide water for irrigation during the guarantee period.

END OF SECTION

TECHNICAL PROVISIONS

SECTION 02960

ENVIRONMENTAL PROTECTION

PART 1 - GENERAL

1.01 SCOPE OF WORK

A. Furnishing all labor, materials and equipment and perform all work required for the prevention of environmental pollution in conformance with applicable laws and regulations, during and as the result of construction operations under this Contract. For the purpose of this Section, environmental pollution is defined as the presence of chemical, physical, or biological elements or agents which adversely affect human health or welfare; unfavorably alter ecological balances of importance to human life; affect other species of importance to man; or degrade the utility of the environment for aesthetic and/or recreational purposes.

B. The control of environmental pollution requires consideration of air, water and land and involves management of noise and solid waste, as well as other pollutants.

C. This Section is intended to ensure that construction is achieved with a minimum of disturbance to the existing ecological balance between a water resource and its surroundings. These are general guidelines. It is the Contractor's responsibility to determine the specific construction techniques to meet these guidelines.

D. Noise and vibration is discussed in Section 01560.

1.02 APPLICABLE REGULATIONS

A. Comply with all applicable federal, state and local laws and regulations concerning environmental pollution control and abatement.

1.03 NOTIFICATIONS

A. The Owner will notify the Contractor in writing of any non-compliance with the foregoing provisions or of any environmentally objectionable acts and corrective action to be taken. State or local agencies responsible for verification of certain aspects of the environmental protection requirements may notify the Contractor in writing, through the Owner, of any non-compliance with state or local requirements. After receipt of such notice from the Owner or from the regulatory agency through the Owner, the Contractor shall immediately take corrective action. Such notice, when delivered to the Contractor or his/her authorized representative at the Site, shall be deemed sufficient for the purpose.

PART 2 - PRODUCTS (NOT USED)

PART 3 - EXECUTION

3.01 PROTECTION OF STREAMS

A. Do not discharge waters from dewatering operations directly into any live or intermittent stream, channel, wetlands, surface water or any storm drain.

3.02 PROTECTION OF LAND RESOURCES

A. Land resources within the project boundaries and outside the limits of permanent work shall be restored to a condition, after completion of construction, matching that prior to construction and not detracting from the appearance of the project area. Confine all construction activities to areas shown on the Drawings.

B. Outside of areas requiring earthwork for the construction of the new facilities, do not deface, injure, or destroy trees or shrubs, nor remove or cut them without prior approval. No ropes, cables, or guys shall be fastened to or attached to any existing nearby trees for anchorage unless specifically authorized by the Owner. Where such special emergency use is permitted, first wrap the trunk with a sufficient thickness of burlap or rags over which softwood cleats shall be tied before any rope, cable, or wire is placed. The Contractor shall in any event be responsible for any damage resulting from such use.

C. Where trees may possibly be defaced, bruised, injured, or otherwise damaged by the Contractor's equipment, dumping or other operations, protect such trees by placing boards, planks, or poles around them. Monuments and markers shall be protected similarly before beginning operations near them.

D. Any trees or other landscape feature scarred or damaged by the Contractor's equipment or operations shall be restored as nearly as possible to its original condition. The Owner will decide what method of restoration shall be used and whether damaged trees shall be treated and healed or removed and replaced.

1. All scars made on trees by equipment, construction operations, or by the removal of limbs larger than 1-inch in diameter shall be coated as soon as possible with an approved tree wound dressing. All trimming or pruning shall be performed in an approved manner by experienced workmen with saws or pruning shears. Tree trimming with axes will not be permitted.

2. Climbing ropes shall be used where necessary for safety. Trees that are to remain, either within or outside established clearing limits, that are subsequently damaged by the Contractor and are beyond saving in the opinion of the Engineer shall be immediately removed and replaced.

3.03 PROTECTION OF AIR QUALITY

A. Burning - The use of burning at the project site for the disposal of refuse and debris will not be permitted.

B. The Contractor shall comply with the requirements of the Ventura County APCD Rule 55, Fugitive Dust, which is provided in Appendix G.

C. The Contractor shall prepare a construction emissions reduction plan and submit it to Ventura County APCD to facilitate equipment selection and document specific commitments to minimize emissions.

END OF SECTION

This page is intentionally left blank.

TECHNICAL PROVISIONS

SECTION 02970

STORM WATER POLLUTION PREVENTION

PART 1 - GENERAL

1.01 SCOPE OF WORK

A. Implement all measures necessary to comply with the waste discharge requirements for discharges of storm water runoff associated with construction activity set forth in SWRCB Order No. 99-08-DWQ, NPDES General Permit No. CAS000002 (General Permit), which may be found on the Internet at www.swrcb.ca.gov/water_issues/programs/stormwater/docs/finalconstpermit.pdf.

B. Prepare a SWPPP which complies with the requirements of the General Permit. Amend the SWPPP as required by the General Permit.

C. Furnish, install, and maintain all erosion and sediment control measures described in the approved SWPPP.

D. Implement monitoring programs, record keeping, maintenance, inspection, repair, training, and sampling as required in the General Permit.

E. Complete an annual Certificate of Compliance Form before July 1st of each year.

1.02 RELATED WORK

A. Dewatering and Drainage is included in Section 02140.

1.03 DEFINITIONS

A. BMPs – Best Management Practices

B. General Permit - SWRCB Order No. 99-08-DWQ, NPDES General Permit No. CAS000002

C. NPDES - National Pollutant Discharge Elimination System

D. RWQCB – Regional Water Quality Control Board

E. SWRCB – State Water Resources Control Board

F. SWPPP – Storm Water Pollution Prevention Plan

1.04 APPLICABLE REGULATIONS

A. Implement all measures necessary to comply with all requirements of the General Permit. A copy may be found on the Internet at www.swrcb.ca.gov/water_issues/programs/stormwater/docs/finalconstpermit.pdf.

B. The SWPPP is considered a report that shall be available to the public under section 308(b) of the Clean Water Act. Make the SWPPP available, upon request, to Owner and/or the RWQCB.

1.05 SUBMITTALS

A. The Contractor shall prepare and submit a SWPPP to Owner (not the Engineer) at least 25 Working Days prior to the start of any field work, including potholing. Owner's review comments will be provided to the Contractor within 15 Working Days, and the Contractor shall revise the SWPPP and re-submit the SWPPP to Owner. The SWPPP shall be completed to the satisfaction of Owner at least 5 Working Days prior to the start of any field work on the project. The SWPPP shall be prepared in accordance with all of the requirements of the General Permit. The Contractor shall provide the Owner with five copies of the Final SWPPP.

B. Before July 1st of each year that field work is being performed, the Contractor shall submit to Owner a copy of the annual Certificate of Compliance Form.

C. The Contractor shall submit to Owner copies of any amendments to the SWPPP.

1.06 OWNER RESPONSIBILITIES

A. The Engineer has prepared descriptions of the BMPs to reduce pollutants in storm water discharges after all construction phases have been completed at the site (Post-Construction BMPs). This information is provided as Appendix D and must be incorporated into the Contractor's SWPPP.

B. Owner has filed a Notice of Intent (NOI) for the project. A copy of the NOI and the SWRCB acknowledgement of receipt of the NOI are included as Appendix C.

PART 2 - PRODUCTS

2.01 MATERIALS

A. The Contractor shall use the "California Stormwater Quality Association Stormwater Best Management Practice Handbook for Construction" as guidance in developing and implementing a SWPPP for this project. To use the electronic version, go to the following internet website: www.cabmphandbooks.org/construction.asp.

B. The SWPPP shall include a page after the title page with the following certification:

Certification

I certify under penalty of law that to the best of my knowledge and belief, storm water pollution prevention controls and inspections are in compliance with the General Permit and site specific Storm Water Pollution Prevention Plan for the Salinity Management Pipeline, Phase 2A. I am aware that there are significant penalties for submitting false information, including the possibility of fine and imprisonment for knowing violations.

Owner

Name: _____	Title: _____
Signature: _____	Date: _____

PART 3 - EXECUTION

3.01 IMPLEMENTATION

A. Prior to commencement of field work, the Contractor shall meet with Owner to review implementation of the SWPPP. The purpose of the meeting will be to review the Contractor's procedures and to develop mutual understandings relative to compliance with the SWPPP and administration of the Contractor's erosion control and pollution prevention program.

B. All storm water management and erosion/sediment control devices and practices described in the SWPPP shall be in place in an area prior to any construction activity in that area.

C. The SWPPP shall remain on the Site while the Site is under construction.

D. Amend the SWPPP as required in the General Permit. All amendments shall be submitted to Owner for acceptance prior to implementation. The SWPPP shall also be amended if the Contractor violates any condition of the General Permit or has not achieved the general objective of reducing or eliminating pollutants in storm water discharges. If Owner or the RWQCB determine that the Contractor is in violation of the General Permit, the SWPPP shall be amended and implemented in a timely manner, but in no case more than 14 Calendar Days after notification by Owner or the RWQCB. All amendments should be dated and directly attached to the SWPPP.

E. Maintain all facilities constructed for erosion and pollution control as long as the construction operations creating the erosion or pollutant are being carried out or until

the material concerned has become stabilized to the extent that erosion or pollution is no longer being created, whichever is later.

3.02 CONSEQUENCES OF NON-COMPLIANCE

A. If the Contractor is out of compliance with the requirements of the General Permit or the approved SWPPP, he/she will be notified either by Owner or by a government agency with jurisdiction over stormwater pollution prevention requirements. Notifications by Owner will be in writing. After receipt of such notice from Owner or from the regulatory agency, the Contractor shall immediately take corrective action.

B. If the Contractor fails to adopt and implement the provisions of the SWPPP, and the Contractor's amendments thereto, Owner reserves the right to implement any required provisions of the SWPPP and will withhold payments in accordance with Section 6.2 of the General Conditions.

C. The Contractor shall bear the costs of any fines levied against the Contractor or Owner for failure to comply with applicable laws and regulations during and as a result of construction under this contract due to the Contractor's negligent acts. Owner will retain from the Contractor's progress payment monies necessary to pay such fines levied again Owner plus 25% of such fines for potential costs for coordination and administrative efforts, and acquiring technical and legal advice.

3.03 COMPLETION OF CONSTRUCTION ACTIVITIES

A. Upon completion of construction activities, remove all construction materials, equipment, trash and debris from the project site.

B. Establish permanent stabilization of all soils disturbed during construction activities. Permanent stabilization shall consist of a permanent vegetative cover and/or equivalent erosion control measures implemented on all bare soils disturbed by construction activities. Areas stabilized with vegetative cover must have a minimum density equivalent to 70 percent of the pre-construction background vegetative cover.

C. Upon approval by Owner, remove all temporary erosion and sediment control measures related to the Work.

END OF SECTION

TECHNICAL PROVISIONS

SECTION 02990

MISCELLANEOUS WORK AND CLEANUP

PART 1 - GENERAL

1.01 SCOPE OF WORK

A. Furnish all labor, materials, equipment and incidentals required and perform the miscellaneous work not specified in other sections but necessary for the proper completion of the Work as shown on the Drawings.

B. When applicable, perform the Work in accordance with other related Sections. When no applicable specification exists, perform the Work in accordance with the best modern practice and/or as directed by the Owner.

C. The work of this Section includes, but is not limited to, the following:

1. Crossing and relocating existing utilities.
2. Restoring driveways and sidewalks.
3. Cleaning up.
4. Incidental work.
5. Job photographs and video recordings.
6. Protection and/or removal and reinstallation of signs, lampposts and mailboxes.
7. Restoration and replacement of curbing.
8. Protection and bracing of utility poles.
9. Restoring rights-of-way.
10. Temporary facilities.
11. Restoring irrigation pipes and appurtenances

PART 2 - PRODUCTS

2.01 MATERIALS

A. Materials required for this Section shall be the same quality of materials that are to be restored. Where feasible and as approved by the Owner or agency having jurisdiction, reuse existing materials that are removed.

PART 3 - EXECUTION

3.01 CROSSING AND RELOCATING EXISTING UTILITIES

A. Perform work required in crossing culverts, water courses including brooks, drainage ditches, storm drains, gas mains, water mains, electric, telephone, gas and water services and other utilities. This work shall include bracing, hand excavation, backfill and any other work required for crossing the utility or obstruction. Notification of utility companies shall be as specified in General and Special Conditions.

B. Locate and pothole existing utilities which may interfere with construction and provide Owner with a potholing report in accordance with General Conditions Section 5.25.

C. Contractor shall notify in writing all Utility Companies 30 Calendar Days in advance of construction of potential crossing or conflict with construction. Owner shall be provided an opportunity to review and comment on the notification 2 Working Days in advance and shall be carbon-copied on the notification issued to the Utility Company.

D. In locations where existing utilities cannot be crossed without interfering with the construction of the Work as shown on the Drawings, remove and relocate the utility as directed by the Owner or cooperate with the Utility Companies concerned if they relocate their own utility.

E. Support all utility crossings as shown on the Drawings and in accordance with Calleguas Standard Drawings Series 1100 where not otherwise shown.

3.02 RESTORING DRIVEWAYS AND SIDEWALKS

A. Existing public and private driveways disturbed by the construction shall be replaced at the Contractor's expense. Paved drives shall be repaved to the limits and thicknesses existing prior to construction. Gravel drives shall be replaced and regraded in kind.

B. Existing public and private sidewalks disturbed by the construction shall be replaced with sidewalks of equal quality and dimension at the Contractor's expense.

3.03 RESTORING IRRIGATION PIPES AND APPURTENANCES

A. Irrigation pipes, heads, valves, boxes, and other such appurtenances damaged or removed during construction shall be restored or repaired to equal or better condition to the satisfaction of the agency having jurisdiction.

B. Upon completion of restoration work, all pipes, valves, heads, and other such irrigation transmission component shall be flushed and cleared of all debris which may inhibit the operation of the irrigation system. Flushing and clearing shall be for all irrigation components within the entire irrigation zone affected, regardless if some irrigation components were not directly involved in the construction.

C. Contractor shall monitor the operation of irrigation system for a period of 30 Calendar Days. Should any irrigation component clog or foul within 30 Calendar Days, the Contractor shall be responsible for that component's replacement and reflush of irrigation zone as described in Paragraph 3.03.B of this Section.

D. Additional inspections beyond the initial inspection by the City of Port Hueneme inspector will be paid for by the Contractor in accordance with Special Conditions 1-42.

3.04 CLEANING UP

A. Remove all construction material, excess excavation, buildings, equipment and other debris remaining on the job as a result of construction operations and restore the Site to a neat and orderly condition.

3.05 INCIDENTAL WORK

A. Do all incidental work not otherwise specified, but necessary to the proper completion of the work as specified in the Contract Documents.

3.06 VIDEO RECORDING OF PROJECT

A. Prior to the Contractor placing any equipment or materials on the Site, the Contractor shall document existing conditions of the Site, including length of pipeline alignment, using color motion video.

B. The video shall be in color with a date and time stamp in the video. Prior to submittal, the video shall be transferred to DVD(s) in the MP3 or MPA digital file format, with a video rate not less than 128 kbps and formatted for use with the Microsoft Windows XP operating system.

C. All video shall be adequate in visual detail and resolution to show the color, type and extent of all items being documented. Upon submittal, if the Owner, in the Owner's own opinion, determines that the extent or detail of the video are inadequate, the Contractor shall correct the deficiencies and resubmit the required copies to the Owner at no additional cost to the Owner.

D. Videos shall document all existing features which may be affected by construction activities. At a minimum, the following shall be documented prior to the start of construction:

1. Entire road width, including condition of pavement and striping along entire pipeline alignments and 200 feet minimum beyond at all ends.

2. Surrounding vegetation including windrows, decorative trees and bushes and agricultural crops.

3. Areas to be used as staging or storage.

4. Along pipeline alignment and adjacent areas.

5. Any facility whose condition is damaged, deteriorated or otherwise not in good condition.

6. Fences, rails, utility boxes, mailboxes, utility poles, control boxes, light standards, signs, and any other such surface and utility appurtenances.

7. Condition of reinforced concrete boxes, internal and visible external components.

8. Paved and unpaved driveways near construction.

9. Drainage ditches, including condition of sidesloped areas.

10. Areas where project facilities will be constructed.

11. All existing surface facilities which will have to be removed and replaced as a result of construction activities.

12. Condition of entire width of existing crossing roads including pavement and striping, up to 200 feet along the crossing road on both sides beyond the pipeline alignment beyond the furthest extent of striping modifications which will be performed due to temporary traffic controls.

13. Outside of all buildings within 200' of pipe alignment to the extent that they can be filmed from public right-of-way.

E. Record the individual features of each item with particular attention being focused upon the existence of any existing faults, fractures, or defects.

F. Control pan rate, rate of travel, camera height, and zoom rate to maintain a steady clear view.

G. Limit recorded coverage to one side of any street at any one time.

H. Create a single, continuous, unedited recording which begins and ends within each portion of a particular construction area. The recording shall proceeding in the direction of ascending baseline stationing.

I. Audio Content

1. Simultaneously record audio content during videotaping.

2. Audio recording shall assist in viewer orientation and in any needed identification, clarification, or description of features being recorded.

3. Audio recording shall only consist of camera operator commentary,

J. The Contractor shall submit to the Owner two copies of DVD(s) of the Site.

K. The Contractor shall maintain an identical set of DVD(s) at the Site in a secure location throughout the duration of the Work.

3.07 TRAFFIC CONTROL PHOTOS

A. Digital photos of all traffic control installations and facilities at each construction area shall be taken every Calendar Day that has traffic control in place, including weekends. Photos shall clearly show all facilities and installations, temporary striping and signal modifications, and signage. Photos shall be copied to a compact disc and submitted to the Owner, with each Working Day's photos combined in a separate folder named for the Working Day. The weekly submittal shall clearly show the project name (Specifications 486) and date for the end of the week on the CD. All photos shall be date stamped. Separate copies of these photos are not required. These photos shall be submitted every Monday by 4 p.m. for the previous week.

3.08 REMOVAL AND REPLACEMENT OF SIGNS, LAMPPOSTS AND MAILBOXES

A. Existing signs, lampposts and mailboxes which may be damaged or removed during the course of installing the new pipelines or other facilities shall be promptly reinstalled in a vertical position at the same location from which they were removed. Replace damaged items with items of equal or better quality than the damaged items. Provide a concrete anchor as necessary to ensure a rigid alignment. Exercise care in the reinstallation of all items to prevent damage to the newly installed pipelines. Traffic signs shall be installed in accordance with the applicable jurisdictional standards and to the satisfaction of the agency having jurisdiction. See General Conditions for additional requirements.

3.09 RESTORATION AND REPLACEMENT OF CURBING

A. Existing concrete or bituminous curbing shall be protected. If necessary, curbing shall be removed and replaced after backfilling. Curbing which is damaged during construction shall be replaced with curbing of equal quality and dimension. Joints between sections

shall be pointed as required after resetting. Bituminous berms shall conform to governing agency standards and requirements.

3.10 COOPERATION WITH OTHER CONTRACTORS AND CONNECTION TO WORK BY OTHERS

A. Construction on other contracts may be carried on during the same period as construction under this Contract. It will be necessary for the Contractor to plan his/her work and cooperate with other contractors to prevent any interference and delay for which he/she shall receive no other compensation than that agreed upon for the Work.

3.11 PROTECTION AND BRACING OF UTILITY POLES

A. Make all arrangements with the proper utility companies for bracing and protection of all utility poles that may be damaged or endangered by the operations. Work under this item shall include the related removal and reinstallation of guy wires, or support poles whether shown on the Drawings or not.

3.12 RESTORING RIGHTS-OF-WAY

A. The Contractor shall be responsible for all damage to public and private property due to his operations. Protect from injury all walls, fences, cultivated shrubbery and vegetables, trees, pavement, underground facilities, such as water, gas and electrical lines, or other utilities that may be encountered during the course of work. If removal and replacement are required, it shall be done in a workmanlike manner so that replacement is equivalent to that which existed prior to construction.

B. Existing lawn and sod surfaces damaged by construction shall be replaced. Cut and replace the lawn and sod, or restore the areas with an equivalent depth and quality of loam, seed and fertilizer as necessary to produce a stand of grass at least equal to that existing prior to construction. These areas shall be maintained and resodded or reseeded, if necessary, until all work under this Contract has been completed and accepted. Any additional work required to restore property to the original condition shall be performed.

C. Existing trees, shrubs, plants and bushes shall be fully protected as specified in Section 02960. The Work shall also include removing and replacing those trees, shrubs and bushes as indicated on the Drawings. It shall include the careful excavation of the rootball which shall be wrapped with burlap while out of the ground. Replant after backfilling the trench, stake in an upright position; and periodically water replanted trees, bushes and shrubs. Contractor shall be fully responsible for ensuring that any and all trees, bushes and shrubs removed and replanted "take" and return to a viable state. Any replanted item that fails to "take" or that is so damaged as to be unsuitable for replanting shall be replaced, at no additional cost to the Owner, with a tree, bush or shrub equal in type and size to the one removed.

D. The Owner will inspect all work for acceptance upon receipt of the Contractor's Certificate of Completion in accordance with Section 6.4.1 of the General Conditions.

E. All plants shall be guaranteed for not less than 1 full year from Statement of Acceptance.

1. At the end of this period, any plant that is missing, dead, or not in satisfactory growth, as determined by the Owner, shall be replaced by the Contractor.

2. All replacements shall be plants of the same kind and size. They shall be furnished and planted as specified herein. The cost of replacement shall be borne by the Contractor except where it can be definitely shown that loss resulted from vandalism or the Owner's failure to maintain planting as instructed.

3.13 TEMPORARY FACILITIES

A. Furnish, install, maintain and remove all temporary facilities required for construction.

END OF SECTION

This page is intentionally left blank.

TECHNICAL PROVISIONS

SECTION 03100

CONCRETE FORMWORK

PART 1 - GENERAL

1.01 SUMMARY OF SECTION

A. Furnish all labor, materials, equipment, and incidentals required and design, install and remove formwork for cast-in-place concrete as shown on the Drawings and as specified herein.

B. Secure to forms as required or set for embedment as required all miscellaneous metal items, sleeves, reglets, anchor bolts, inserts and other items furnished under other Sections and required to be cast into concrete.

1.02 RELATED WORK

A. Concrete Reinforcement is included in Section 03200.

B. Concrete Joints and Joint Accessories are included in Section 03250.

C. Cast-in-Place Concrete is included in Section 03300.

D. Grout is included in Section 03600.

1.03 SUBMITTALS

A. Submit to the Engineer, in accordance with Section 01300, Shop Drawings and product data showing materials of construction and details of installation for the following:

1. Form release agent

2. Form ties

3. Bond breakers

1.04 REFERENCE STANDARDS

A. American Concrete Institute (ACI)

1. ACI 117 – Standard Tolerances for Concrete Construction and Materials
2. ACI 301 - Specifications for Structural Concrete for Buildings
3. ACI 318 - Building Code Requirements for Reinforced Concrete

4. ACI 347 - Guide to Formwork for Concrete

B. American Plywood Association (APA)

1. Material grades and designations as specified

C. US Department of Commerce Product Standard, PS-1 – Structural Plywood.

D. Construction Safety Orders, Division of Industrial Safety, State of California.

1.05 SYSTEM DESCRIPTION AND DESIGN

A. Architectural Concrete: Architectural concrete is wall, slab, beam or column concrete which will have surfaces exposed to view in the finished work.

B. Structural Design Responsibility: All forms and shoring shall be designed at the Contractor's expense by a Civil Engineer registered in the State of California. Formwork shall be designed and erected in accordance with the requirements of ACI 301 and ACI 318 and as recommended in ACI 347 and shall comply with all applicable regulations and codes. The design shall consider any special requirements due to the use of plasticized and/or retarded set concrete. All forms shall be designed for the static head of plastic concrete.

1.06 PRODUCT DELIVERY, STORAGE AND HANDLING

A. On delivery to the Site, place the material in area protected from weather.

B. Store material above ground on framework or blocking. Cover wood for forms with protective waterproof covering. Provide for adequate air circulation or ventilation.

C. Handle materials to prevent damage.

PART 2 - PRODUCTS

2.01 GENERAL

A. The usage of a manufacturer's name and model or catalog number is for the purpose of establishing the standard of quality and general configurations required.

2.02 MATERIALS

A. General

1. Forms for cast-in-place concrete shall be made of wood, metal, or other approved material.

2. All forms shall be designed and constructed to provide a flat, uniform concrete surface requiring minimal finishing or repairs.

3. Form materials shall be of material that will not adversely affect the concrete and will facilitate placement of concrete to the shape, form, line, and grade shown.

4. Unless otherwise indicated, exterior corners in concrete members shall be provided with 3/4-inch chamfers. Re-entrant corners in concrete members shall not have fillets unless other indicated.

5. Wood Forms

   a. Wood forms for the Work shall be new and unused. Construct wood forms of sound lumber or plywood of suitable dimensions and free from knotholes and loose knots. Where used for exposed surfaces, dress and match boards. Sand plywood smooth and fit adjacent panels with tight joints.

   b. Lumber shall be Douglas Fir or Southern Pine, construction grade or better.

   c. Wood forms for surfaces to be painted shall be Medium Density Overlaid plywood, MDO Ext. Grade, unless otherwise noted.

6. Metal Forms

   a. Metal forms may be used when approved by the Engineer.

   b. Metal forms shall be an approved type that will accomplish satisfactory results

B. Form Release Agent

1. Coat all forming surfaces in contact with concrete which will not be painted using an effective, non-staining, non-residual, water based, bond-breaking form coating unless otherwise noted.

2. Release agent used for color concrete shall be non-staining, one which minimizes formation of "bug holes" in surface of concrete, and as per recommendations of color additive manufacturer.

C. Form Ties

1. Form ties encased in concrete other than those specified in the following paragraphs shall be designed so that after removal of the projecting part, no metal shall remain within 1 1/2 inches of the face of the concrete. The part of the tie to be removed shall be at least 1/2 inch in diameter or be provided with a wood or metal cone at least 1/2 inch in diameter and 1 1/2 inches long. Form ties in concrete exposed to view shall be the cone-washer type.

2. Form ties for exposed exterior and interior walls shall be as specified in the preceding paragraph except that the cones shall be of approved wood or plastic.

3. Flat bar ties for panel forms shall have plastic or rubber inserts having a minimum depth of 1 1/2 inches and sufficient dimensions to permit proper patching of the tie hole.

4. Common wire shall not be used for form ties.

5. Alternate form ties consisting of tapered through-bolts at least 1 inch in diameter at the smallest end or through-bolts that utilize a removable tapered sleeve of the same minimum size may be used at the Contractor's option. Obtain Engineer's acceptance of system and spacing of ties prior to ordering or purchase of forming. The Contractor shall be responsible for water tightness of the form ties and any repairs needed.

6. Form ties shall be fiberglass rod tinted to match concrete color where color concrete is used.

PART 3 - EXECUTION

3.01 GENERAL

A. Forms shall be surfaced, designed and constructed in accordance with the recommendations of ACI 347 and shall meet the additional requirements specified herein.

B. The forms shall conform to the shapes, lines and dimensions of members shown; as required to obtain accurate alignment, location and grades; and to obtain level and plumb work in finish structures.

C. Forms shall be sufficiently rigid to withstand construction loads and vibration and to prevent displacement or sagging between supports. Construct forms so that the concrete will not be damaged by their removal. The Contractor shall be entirely responsible for the adequacy of the forming system. Adjacent edges and ends of panels of all forms shall be effectively held together and in accurate alignment so as to prevent the formation of ridges, fins, offsets or similar surface defects in the finished concrete. The forms shall be tight in order to prevent the loss of water and cement during placing and vibrating of the concrete.

D. Concrete forms shall be substantial, free from surface defects, and sufficiently tight to prevent leakage. Forms shall be properly braced or tied together to maintain their position and shape under a load of freshly-placed concrete. If adequate foundation for shores cannot be secured, trussed supports shall be provided.

E. Provide openings, offsets, keyways, recesses, moldings, rustications, reglets, chamfers, blocking, screeds, bulkheads, anchorages and inserts, and other features required. Use selected materials to obtain required finishes. Unless otherwise shown, chamfer strips shall be provided at horizontal and vertical projecting corners to produce a 3/4-inch chamfer. Rectangular or trapezoidal moldings shall be placed in locations requiring sealants.

F. The design and inspection of concrete forms, falsework, and shoring shall comply with applicable local, state and federal regulations. Plumb and string lines shall be installed before concrete placement and shall be maintained during placement. During concrete placement, the Contractor shall continually monitor plumb and string line form positions and immediately correct deficiencies.

G. All form surfaces in contact with concrete shall be thoroughly cleaned, all damaged places repaired, all projecting nails withdrawn and all protrusions smoothed. Reuse of wooden forms for other than rough finish will not be permitted.

H. Cleaning and Tightening

1. Thoroughly clean forms and adjacent surfaces to receive concrete. Remove chips, wood, sawdust, dirt or other debris just before concrete is to be placed. Retighten forms immediately after concrete placement as required to eliminate mortar leaks.

I. Forms shall be used for all cast-in-place concrete including sides of footings except for pipe and conduit encasements where concrete may be placed directly against the side of the trench. Forms shall be constructed and placed so that the resulting concrete will be of the shape, lines, dimensions and appearance indicated on the Drawings.

J. Forms for Exposed-to-View Concrete

1. Do not use metal cover plates for patching holes or defects in forms.

2. Provide sharp, clean corners at intersecting planes, without visible edges or offsets. Back joints with extra studs or girts to maintain true, square intersections.

3. Use extra studs, walers and bracing to prevent bowing of forms between studs and to avoid bowed appearance in concrete. Do not use narrow strips of form material that will produce bow.

4. Assemble forms so they may be readily removed without damage to exposed concrete surfaces.

5. Form molding shapes, recesses, rustication joints and projections with smooth-finish materials and install in forms with sealed joints to prevent displacement.

3.02 FORM DESIGN

A. All forms shall be true in every respect to the required shape and size, shall conform to the established alignment and grade, and shall be of sufficient strength and rigidity to maintain their position and shape under the loads and operations incident to placing and vibrating the concrete.

B. Suitable and effective means shall be provided on all forms for holding adjacent edges and ends of panels and sections tightly together and in accurate alignment so as to prevent the formation of ridges, fins, offsets, or similar surface defects in the finished concrete.

C. Plywood, 5/8 inch and greater in thickness, may be fastened directly to studding if the studs are spaced close enough to prevent visible deflection marks in the concrete.

D. The forms shall be tight so as to prevent the loss of water, cement and fines during placing and vibrating of the concrete.

3.03 FORM CONSTRUCTION AND PREPARATION

A. Wood forms which will not be painted and will come in contact with concrete shall be coated with an effective release agent prior to form installation.

B. Steel forms shall be thoroughly cleaned and mill scale and other ferrous deposits shall be sandblasted or otherwise removed from the contact surface for all forms except those utilized for surfaces receiving a rough finish. All forms shall have the contact surfaces coated with a release agent unless the concrete contact surface is to be painted.

C. Vertical Surfaces. All vertical surfaces of concrete members shall be formed, unless otherwise approved in writing by the Engineer. Not less than 1 inch of concrete shall be added to the thickness of the concrete member as shown where concrete is permitted to be placed against trimmed ground in lieu of forms. Such permission will be granted only for members of comparatively limited height and where the character of the ground is such that it can be trimmed to the required lines and will stand securely without caving or sloughing until the concrete has been placed.

D. Construction Joints. Concrete construction joints will not be permitted at locations other than those shown or specified except as may be acceptable to the Engineer. When a second lift is placed on hardened concrete, special precautions shall be taken in the way of the number, location, and tightening of ties at the top of the old lift and bottom of the new to prevent any unsatisfactory affect whatsoever on the concrete. Pipe stubs and anchor bolts shall be set in the forms where required.

E. Form Ties

1. Embedded Ties. Holes left by the removal of form tie cones shall be reamed with suitable toothed reamers so as to leave the surface of the holes clean and rough before being filled with mortar as indicated in Section 03300. Wire ties for holding forms will not be permitted. No form-tying device or part thereof, other than metal, shall be left embedded in the concrete. Ties shall not be removed in such manner as to leave a hole extending through the interior of the concrete members. The use of snap-ties which cause spalling of the concrete upon form stripping or tie removal will not be permitted. If steel panel forms are used, rubber grommets shall be provided where the ties pass through the form in order to prevent loss of cement paste. Where metal rods extending through the concrete are used to support or to strengthen forms, the rods shall remain embedded and shall terminate not less than 1 inch back from the formed face or faces of the concrete.

2. Removable Ties. Where taper ties are approved for use, the larger end of the taper tie shall be on the wet side of walls in water-retaining structures. After the taper tie is removed, the hole shall be thoroughly cleaned and roughened for bond. A pre-cast neoprene or polyurethane tapered plug shall be located at the wall centerline. The hole shall be completely filled with non-shrink grout for water-bearing and below-grade walls. The hole shall be completely filled with non-shrink or regular cement grout for above-grade walls which are dry on both sides. Exposed faces of walls shall have the outer 2 inches of the exposed face filled with a cement grout which shall match the color and texture of the surrounding wall surface.

F. Installation of Embedded Items

1. Set and built into formwork, anchorage devices and other embedded items shown on the Drawings and specified or required by other Sections.

2. Set edge forms or bulkheads and intermediate screed strips for slabs to obtain required elevations and contours in the finished slab surface. Provide and secure units to support screeds.

3.04 REUSE OF FORMS

A. Forms may be reused only if in good condition and only if acceptable to the Owner. Split, frayed, delaminated or otherwise damaged form facing material will not be acceptable. Apply new form coating compound material to concrete contact surfaces as specified for new formwork. Light sanding between uses will be required wherever necessary to obtain uniform surface texture on all exposed concrete surfaces.

B. When forms are extended for successive concrete placement, thoroughly clean surfaces, remove fins and laitance, and tighten form to close all joints. Align and secure joints to avoid offsets. Do not use "patched" forms for exposed concrete surfaces. Form surfaces shall be subject to Engineer's and Owner’s approval.

3.05 REMOVAL OF FORMS

A. The Contractor shall be responsible for all damage resulting from removal of forms. Forms and shoring for structural slabs or beams shall remain in place in accordance with ACI 301 and ACI 347. Form removal shall conform to the requirements specified in Section 03300.

B. Careful procedures for the removal of forms shall be strictly followed, and this work shall be done with care so as to avoid injury to the concrete. No heavy loading on green concrete will be permitted.

C. Do not remove supporting forms or shoring until the members have acquired sufficient strength to safely support their weight and the load upon them. Results of suitable control tests may be used as evidence that the concrete has attained sufficient strength.

3.06 FIELD INSPECTION

A. Notify the Owner when the forms are complete and ready for inspection at least 24 hours prior to the proposed concrete placement.

B. Failure of the forms to comply with the requirements specified herein or to produce concrete complying with requirements of this Section shall be grounds for rejection of that portion of the concrete work. Rejected work shall be repaired or replaced as directed by the Engineer at no additional cost to the Owner. Such repair or replacement shall be subject to the requirements of this Section.

END OF SECTION

TECHNICAL PROVISIONS

SECTION 03200

CONCRETE REINFORCEMENT

PART 1 - GENERAL

1.01 SCOPE OF WORK

A. Furnish all labor, materials, equipment, and incidentals required and install all concrete reinforcement complete as shown on the Drawings and as specified herein.

B. The work includes fabrication and placement of reinforcement, including bars, ties and supports, and welded wire fabrics for concrete and encasements.

1.02 RELATED WORK

A. Concrete Formwork is included in Section 03100.

B. Concrete Joint and Joint Accessories are included in Section 03250.

C. Cast-In-Place Concrete is included in Section 03300.

D. Grout is included in Section 03600.

1.03 SUBMITTALS

A. Submit to the Engineer, in accordance with Section 01300, Shop Drawings and product data showing materials of construction, and details of installation for:

1. Reinforcing steel. Placement drawings shall conform to the recommendations of ACI 315. All reinforcement in a concrete placement shall be included on a single placement drawing or cross-referenced to the main pertinent placement drawing. This drawing shall include bar lists, schedule, bending details, placing plans and elevations, concrete cover, splice locations, splice lengths, and the additional reinforcement (around openings, at corners, etc.) shown on the standard detail sheets. Bars to have special coatings and/or to be of special steel or special yield strength are to be clearly identified.

2. Bar bending details. The bars shall be referenced to the same identification marks shown on the placement drawings.

B. Where mechanical couplers are required or permitted to be used to splice reinforcement steel, manufacturer's literature shall be submitted which contains instructions and recommendations for installation for each type of coupler used, certified test reports which

verify the load capacity of each type and size of coupler used, and Shop Drawings which show the location of each coupler with details of how they are to be installed in the formwork.

C. Submit Test Reports for each of the following items.

1. Certified copy of mill test on each steel proposed for use showing the physical properties of the steel and the chemical analysis.

2. Certified copy of test reports for each foreign manufactured steel proposed for use in the fabrication of reinforcement. The tests shall be specifically made for this project at the expense of the Contractor by a domestic, independent testing laboratory certified to perform the tests. The testing shall be for conformity to the applicable ASTM standard.

1.04 REFERENCE STANDARDS

A. American Concrete Institute (ACI)

1. ACI 211.2 - Standard Practice for Selecting Proportions for Structural Lightweight Concrete

2. ACI 301 - Specifications for Structural Concrete for Buildings

3. ACI 315 - Details and Detailing of Concrete Reinforcement

4. ACI 318 - Building Code Requirements for Reinforced Concrete

5. SP-66 (ACI 315) ACI Detailing Manual

B. American Society for Testing and Materials (ASTM)

1. ASTM A82 - Specification for Steel Wire, Plain, for Concrete Reinforcement

2. ASTM A185 - Standard Specification for Welded Steel Wire Fabric for Concrete Reinforcement

3. ASTM A615 - Standard Specification for Deformed and Plain Billet-Steel Bars for Concrete Reinforcement

4. ASTM A706 - Standard Specification for Low-Alloy Steel Deformed Bars for Concrete Reinforcement

C. American Welding Society (AWS)

1. AWS D1.4 - Structural Welding Code Reinforcing Steel

D. Concrete Reinforcing Steel Institute (CRSI)

1. Manual of Standard Practice

1.05 DELIVERY, HANDLING AND STORAGE

A. Reinforcing steel shall be substantially free from mill scale, rust, dirt, grease, or other foreign matter.

B. Reinforcing steel shall be shipped and stored with bars of the same size and shape fastened in bundles with durable tags, marked in a legible manner with waterproof markings showing the same "mark" designations as those shown on the submitted placing drawings.

C. Reinforcing steel shall be stored off the ground, protected from moisture and kept free from dirt, oil, or other injurious contaminants.

PART 2 - PRODUCTS

2.01 MATERIALS

A. Materials shall be new and shall comply with the following material specifications.

B. Deformed Concrete Reinforcing Bars: ASTM A706, Grade 60 deformed bars or the following alternate materials are allowed:

1. ASTM A615 Grade 60 may be used for ASTM A706 provided the following requirements are satisfied:

a. The actual yield strength of the reinforcing steel based on mill tests shall not exceed the specified yield strength by more than 18,000 psi. Re-tests shall not exceed this value by more than an additional 3000 psi.

b. The ratio of the actual ultimate tensile strength to the actual tensile yield strength of the reinforcement shall not be less than 1.25.

c. The carbon equivalency (CE) of ASTM A615 bars shall be 0.55 or less.

C. Reinforcing Steel Accessories

1. Plastic Protected Bar Supports: CRSI Bar Support Specifications, Class 1 - Maximum Protection.

2. Stainless Steel Protected Bar Supports: CRSI Bar Support Specifications, Class 2 - Moderate Protection.

3. Precast Concrete Block Bar Supports: CRSI Bar Support Specifications, Precast Blocks. Blocks shall have equal or greater strength than the surrounding concrete.

D. Tie Wire

1. Tie Wires for Reinforcement shall be 14-gauge or heavier, black annealed wire.

E. Mechanical Couplers

1. Mechanical couplers shall be provided where shown and where approved by the Owner. The couplers shall develop a tensile strength which exceeds 125 percent of the yield strength of the reinforcement bars being spliced at each splice.

2. Where the type of coupler used is composed of more than one component, all components required for a complete splice shall be supplied. This shall apply to all mechanical splices, including those splices intended for future connections.

3. The reinforcement steel and coupler used shall be compatible for obtaining the required strength of the connection. Straight-threaded type couplers shall require the use of the next larger size reinforcing bar or shall be used with reinforcing bars with specially forged ends which provide upset threads which do not decrease the basic cross section of the bar.

4. Mechanical couplers shall be BPI Standard Barsplicer System or Lenton Form Saver by Erico Products or approved equivalent.

F. Welded Steel Wire Fabric

1. Welded wire fabric reinforcement shall conform to the requirements of ASTM A185 and as indicated, provided that welded wire fabric with longitudinal wire of W4 size wire and smaller shall be either furnished in flat sheets or in rolls with a core diameter of not less than 10 inches, and provided further that welded wire fabric with longitudinal wires larger than W4 size shall be furnished in flat sheets only.

G. Spiral Reinforcement

1. Spiral reinforcement shall be cold-drawn steel wire conforming to the requirements of ASTM A82.

H. Welded Splices

1. Welded splices shall be provided only where shown and where approved by the Owner. All welded splices of reinforcement steel shall develop a tensile strength

which exceeds 125 percent of the yield strength of the reinforcement bars which are connected.

2. All materials required to conform the welded splices to the requirements of AWS D1.4 shall be provided.

2.02 FABRICATION

A. Fabrication of reinforcement shall be in compliance with the CRSI Manual of Standard Practice.

B. Bars shall be cold bent. Bars shall not be straightened or rebent. Bars with kinks or bends not scheduled will be rejected.

C. Bars shall be bent around a revolving collar having a diameter of not less than that recommended by the CRSI.

D. Bar ends that are to be butt spliced, placed through limited diameter holes in metal, or threaded shall have the applicable end(s) saw-cut. Such ends shall terminate in flat surfaces within 1 1/2 degrees of a right angle to the axis of the bar.

PART 3 - EXECUTION

3.01 GENERAL

A. All reinforcement steel, welded wire fabric, couplers, and other appurtenances shall be fabricated and placed in accordance with the requirements of the applicable codes and the supplementary requirements specified herein and as shown on the Drawings.

B. Surface condition, bending, spacing and tolerances of placement of reinforcement shall comply with the CRSI Manual of Standard Practice. The Contractor shall be solely responsible for providing an adequate number of bars and maintaining the spacing and clearances shown on the Drawings.

3.02 FABRICATION

A. General:

1. Reinforcement steel shall be accurately formed to the dimensions and shapes shown, and the fabricating details shall be prepared in accordance with ACI 315 and ACI 318 except as indicated. Bars shall be bent cold.

2. The Contractor shall fabricate reinforcement bars for structures in accordance with bending diagrams, placing lists, and placing drawings.

3. Reinforcing steel bars shall not be field bent except where shown on the Drawings or

specifically authorized in writing by the Engineer. If authorized, bars shall be cold-bent around the standard diameter spool specified in the CRSI. Do not heat bars. Closely inspect the reinforcing steel for breaks. If the reinforcing steel is damaged, replace, Cadweld or otherwise repair as directed by the Engineer. Do not bend reinforcement after it is embedded in concrete.

B. Fabricating Tolerances: Bars used for concrete reinforcement shall meet the following requirements for fabricating tolerances:

1. Sheared length: $\pm$ 1 inch

2. Depth of truss bars: + 0, - 1/2 inch

3. Stirrups, ties, and spirals: $\pm$ 1/2 inch

4. All other bends: $\pm$ 1 inch

C. No reinforcing steel bars shall be welded either during fabrication or erection unless specifically shown on the Drawings or specified herein, or unless prior written approval has been obtained from the Engineer. All bars that have been welded, including tack welds, without such approval shall be immediately removed from the Work.

3.03 PLACING

A. Reinforcement steel shall be accurately positioned and shall be supported and wired together to prevent displacement, using annealed iron wire ties or suitable clips at intersections. All reinforcement steel shall be supported by concrete, plastic or metal supports, spacers or metal hangers which are strong and rigid enough to prevent any displacement of the reinforcement steel. Where concrete is to be placed on the ground, supporting concrete blocks (or dobies) shall be used in sufficient numbers to support the bars without settlement, but in no case shall such support be continuous. All concrete blocks used to support reinforcement steel shall be tied to the steel with wire ties which are embedded in the blocks. For concrete over formwork, the Contractor shall furnish concrete, metal, plastic, or other acceptable bar chairs and spacers.

B. Limitations on the use of bar support materials shall be as follows:

1. Concrete Dobies: Permitted at all locations except where architectural finish is required.

2. Wire Bar Supports: Permitted only at slabs over dry areas, interior dry wall surfaces, and exterior wall surfaces.

3. Plastic Bar Supports: Permitted at all locations except on grade.

C. Tie wires shall be bent away from the forms in order to provide the specified concrete coverage.

D. Bars additional to those shown which may be found necessary or desirable by the Contractor for the purpose of securing reinforcement in position shall be provided by the Contractor at no additional cost to the Owner.

E. Unless otherwise specified, reinforcement placing tolerances shall be within the limits specified in Section 7.5 of ACI 318.

F. Bars may be moved as necessary to avoid interference with other reinforcement steel, conduits, or embedded items. If bars are moved more than one bar diameter or enough to exceed the above tolerances, the resulting arrangement of bars shall be subject to the approval of the Engineer.

G. Welded wire fabric reinforcement placed over horizontal forms shall be supported on slab bolsters. Slab bolsters shall be spaced not more than 30 inches on centers, shall extend continuously across the entire width of the reinforcement mat, and shall support the reinforcement mat in the plane indicated.

H. Welded wire fabric placed over the ground shall be supported on wired concrete blocks (dobies) spaced not more than 3 feet on centers in any direction. The construction practice of placing welded wire fabric on the ground and hooking into place in the freshly placed concrete shall not be used.

I. Accessories supporting reinforcing bars shall be spaced such that there is no deflection of the accessory from the weight of the supported bars. When used to space the reinforcing bars from wall forms, the forms and bars shall be located so that there is no deflection of the accessory when the forms are tightened into position.

J. Except as otherwise indicated on the Drawings, the minimum concrete cover of reinforcement shall be as follows:

1. Concrete cast against and permanently exposed to earth: 3 inches

2. Concrete exposed to soil, water, sewage, sludge and/or weather (cover to be measured from deepest part of architectural reveals):

   a. No. 6 bars and larger: 2 inches
   b. No. 5 bars and smaller: 1 1/2 inches

3. Concrete not exposed to soil, water, sewage, sludge and/or weather:

   a. Slabs (top and bottom cover), walls, joists, shells and folded plate members: 1 inch

3.04 SPACING OF BARS

A. The clear distance between parallel bars (except in columns and between multiple layers of

bars in beams) shall be not less than the nominal diameter of the bars nor less than 1-1/3 times the maximum size of the coarse aggregate, nor less than one inch.

B. Where reinforcement in beams or girders is placed in 2 or more layers, the clear distance between layers shall be not less than one inch.

C. The clear distance between bars shall also apply to the distance between a contact splice and adjacent splices or bars.

3.05 SPLICING

A. General:

1. Reinforcement bar splices shall only be used at locations indicated. When it is necessary to splice reinforcement at points other than where shown, the character of the splice shall be as acceptable to the Owner.

B. Splices of Reinforcement:

1. The length of lap for reinforcement bars, unless otherwise indicated, shall be in accordance with ACI 318. Splices in adjacent bars shall be staggered. Splices in two curtains where used shall not occur in the same location. Class A splices may be used when 50 percent or less of the bars are spliced within the required lap length. Class B splices shall be used at all other locations.

2. Laps of welded wire fabric shall be in accordance with the ACI 318. Adjoining sheets shall be securely tied together with No. 14 tie wire, one tie for each 2 running feet. Wires shall be staggered and tied in such a manner that they cannot slip.

3. Splices in column spiral reinforcement shall be tension lap splices the greater of either 48 bar diameters or 1-1/2 turn, but not less than 12 inches in length. Welded splices shall only be used where specifically approved by the Engineer in writing.

C. Bending or Straightening: Reinforcement shall not be straightened or rebent in a manner which will injure the material. Bars with kinks or bends not shown shall not be used. All bars shall be bent cold, unless otherwise permitted by the Engineer. No bars partially embedded in concrete shall be field-bent except as shown or specifically permitted in writing by the Engineer.

D. Couplers which are located at a joint face shall be a type which can be set either flush or recessed from the face as shown. The couplers shall be sealed during concrete placement to completely eliminate concrete or cement paste from entering. Couplers intended for future connections shall be recessed a minimum of 1/2 inch from the concrete surface. After the concrete is placed, the coupler shall be plugged with plastic plugs which have an O-ring seal and the recess filled with sealant to prevent any contact with water or other corrosive materials. Threaded couplers shall be plugged.

E. Unless indicated otherwise, mechanical coupler spacing and capacity shall match the spacing and capacity of the reinforcing shown for the adjacent section.

F. Tack welding of reinforcing bars is prohibited.

3.06 CLEANING AND PROTECTION

A. Reinforcement steel shall at all times be protected from conditions conducive to corrosion until concrete is placed around it.

B. The surfaces of all reinforcement steel and other metalwork to be in contact with concrete shall be thoroughly cleaned of all dirt, grease, loose scale and rust, grout, mortar and other foreign substances immediately before the concrete is placed. Where there is delay in depositing concrete, reinforcement shall be re-inspected and, if necessary, re-cleaned.

C. Reinforcement which will be exposed for a considerable length of time after being placed shall be coated with a heavy coat of neat cement slurry.

3.07 EMBEDMENT OF DRILLED REINFORCING STEEL DOWELS

A. Hole Preparation:

1. The hole diameter shall be as recommended by the epoxy manufacturer but shall be no larger than 0.25 inch greater than the diameter of the outer surface of the reinforcing bar deformations.

2. The depth of the hole shall be as recommended by the epoxy manufacturer to fully develop the bar but shall not be less than 12 bar diameters, unless noted otherwise.

3. The hole shall be drilled by methods which do not interfere with the proper bonding of epoxy.

4. Existing reinforcing steel in the vicinity of proposed holes shall be located prior to drilling. The location of holes to be drilled shall be adjusted to avoid drilling through or nicking any existing reinforcing bars.

5. The hole shall be blown clean with clean, dry compressed air to remove all dust and loose particles.

6. Epoxy shall be injected into the hole through a tube placed to the bottom of the hole. The tube shall be withdrawn as epoxy is placed but kept immersed to prevent formation of air pockets. The hole shall be filled to a depth that insures that excess material will be expelled from the hole during dowel placement.

7. Dowels shall be twisted during insertion into the partially filled hole so as to guarantee full wetting of the bar surface with epoxy. The bar shall be inserted slowly enough to avoid developing air pockets.

3.08 REINFORCEMENT AROUND OPENINGS

A. Unless specific additional reinforcement around openings is shown on the Drawings, provide additional reinforcing steel on each side of the opening equivalent to 1/2 of the cross-sectional area of the reinforcing steel interrupted by an opening. The bars shall have sufficient length to develop bond at each end beyond the opening or penetration. Show these openings on the reinforcing placement drawings and provide additional reinforcing at each side of opening.

3.09 FIELD INSPECTION

A. In no case shall any reinforcing steel be covered with concrete until the installation of the reinforcement including the size, spacing and position of the reinforcement has been observed by the Owner and the Owner's release to proceed with the concreting has been obtained. The Owner shall be given a minimum of 24 hours prior notice of the readiness of placed reinforcement for observation. The forms shall be kept open until the Owner has finished his/her observations of the reinforcing steel.

END OF SECTION

TECHNICAL PROVISIONS

SECTION 03250

CONCRETE JOINTS AND JOINT ACCESSORIES

PART 1 - GENERAL

1.01 SCOPE OF WORK

A. Furnish all labor, materials, equipment and incidentals required and install accessories for concrete joints as shown on the Drawings and as specified herein.

1.02 RELATED WORK

A. Concrete Formwork is included in Section 03100.

B. Concrete Reinforcement is included in Section 03200.

C. Cast-In-Place Concrete is included in Section 03300.

D. Concrete Finishing is included in Section 03350.

E. Grout is included in Section 03600.

F. Metal Fabrications are included in Section 05500.

1.03 SUBMITTALS

A. Submit to the Engineer, in accordance with Section 01300, Shop Drawings and product data. Submittal shall include the following:

1. Premolded joint fillers: Product data including catalog cut, technical data, storage requirements, installation requirements, location of use and conformity to ASTM standards.

2. Bond breaker: Product data including catalog cut, technical data, storage requirements, installation requirements, location of use and conformity to ASTM standards.

3. Bonding agents: Product data including catalog cut, technical data, storage requirements, product life, application requirements and conformity to ASTM standards.

4. Joint location: Submit Shop Drawings showing location of each type of joint for each structure.

B. Certifications

1. Certification that all materials used within the joint system are compatible with each other.

1.04 REFERENCE STANDARDS

A. American Concrete Institute (ACI)

1. ACI 301 - Specifications for Structural Concrete for Buildings

B. American Society for Testing and Materials (ASTM)

1. ASTM A675 - Standard Specification for Steel Bars, Carbon, Hot-Wrought, Special Quality, Mechanical Properties

2. ASTM A775 - Standard Specification for Epoxy-Coated Steel Reinforcing Bars

3. ASTM C881 - Standard Specification for Epoxy-Resin-Base Bonding Systems for Concrete

4. ASTM C920 - Specifications for Elastomeric Joint Sealants

5. ASTM C1059 - Standard Specification for Latex Agents for Bonding Fresh to Hardened Concrete

6. ASTM D412 - Test Methods for Rubber Properties in Tension

7. ASTM D624 - Test Method for Rubber Property -- Tear Resistance

8. ASTM D638 - Test Method for Tensile Properties of Plastics

9. ASTM D746 - Test Method for Brittleness Temperature of Plastics and Elastomers by Impact

10. ASTM D747 - Test Method for Apparent Bending Modulus of Plastics by Means of a Cantilever Beam

11. ASTM D1056 - Specification for Flexible Cellular Materials -- Sponge or Expanded Rubber

12. ASTM D1752 - Standard Specification for Preformed Sponge Rubber and Cork Expansion Joint Fillers for Concrete Paving and Structural Construction

13. ASTM D2240 - Test Method for Rubber Property -- Durometer Hardness

C. Federal Specifications:

1. TT-S-0227E(3) - Sealing Compound, Elastomeric Type, Multi-Component for Caulking, Sealing, and Glazing Buildings and Other Structures

D. United States Army Corps of Engineers (USACE)

1. CRD C572 – Specification for Polyvinylchloride Waterstops

1.05 TYPES OF JOINTS

A. Construction Joints. When fresh concrete is placed against a hardened concrete surface, the joint between the two pours is called a construction joint.

B. Contraction Joints: Contraction joints are similar to construction joints except that the fresh concrete shall not bond to the hardened surface of the first pour which shall be coated with a bond breaker. The slab reinforcement shall be stopped 4 1/2 inches from the joint which is provided with a sleeve-type dowel to allow shrinkage of the concrete of the second pour. Waterstop and/or sealant groove shall also be provided when specified or shown.

C. Expansion Joints: To allow the concrete to expand freely, a space is provided between the two pours, and spacing for the joint shall be formed as shown. This space is obtained by placing a filler joint material against the first pour which acts as a form for the second pour.

D. Premolded expansion joint material shall be installed with the edge at the indicated distance below or back from the finished concrete surface and shall have a slightly tapered, dressed, and oiled wood strip secured to or placed at the edge thereof during concrete placement. The wood strip shall later be removed to form space for sealing material.

The space so formed shall be filled with a joint sealant material as indicated below. In order to keep the two wall or slab elements in line, the joint shall also be provided with a sleeve-type dowel if shown.

E. Control Joints: The function of the control joint is to provide a weaker plane in the concrete where shrinkage cracks will probably occur. A groove of the shape and dimensions shown is formed or saw-cut in the cement. This groove is afterward filled with a joint sealant material.

PART 2 - PRODUCTS

2.01 GENERAL

A. The use of manufacturer's name and model or catalog number is for the purpose of establishing the standard of quality and general configuration required.

B. All materials used together in a given joint (bond breakers, backer rods, joint fillers, sealants, etc.) shall be compatible with one another. Coordinate selection of suppliers and products to ensure compatibility. Under no circumstances shall asphaltic bond breakers or joint fillers be used in joints receiving sealant.

2.02 BOND BREAKER

A. Bond breaker tape shall be an adhesive-backed glazed butyl or polyethylene tape which will satisfactorily adhere to the premolded joint filler or concrete surface as required. The tape shall be the same width as the joint.

B. Bond breaker for concrete other than where tape is specifically called for shall be either bond breaker tape or a nonstaining type bond prevention coating such as Williams Tilt-up Compound by Williams Distributors Inc.; Silcoseal 77, by SCA Construction Supply Division, Superior Concrete Accessories; Super Bond Breaker WB by Burke Co., San Mateo, CA; or approved equivalent.

2.03 BONDING AGENT

A. Epoxy bonding agent shall be a two-component, solvent-free, moisture insensitive, epoxy resin material conforming to ASTM C881, Type V. The bonding agent shall be Sikadur 32 Hi-Mod by Sika Corporation of Lyndhurst, N.J.; Concresive Liquid (LPL) by Master Builders of Cleveland, OH; or approved equivalent.

2.04 JOINT SEALANT

A. Joint sealant shall be polyurethane polymer designed for bonding to concrete which is continuously submerged in water.

B. Joint sealant material shall meet the following requirements (73° F and 50 percent relative humidity):

Work Life	45 - 180 minutes
Time to Reach 20 Shore "A" Hardness (at 77° F, 200 gr quantity)	24 hours, maximum
Ultimate Hardness (ASTM D2240)	20 - 45 Shore "A"
Tensile Strength (ASTM D412)	200 psi, minimum

Ultimate Elongation (ASTM D412)	400 percent, minimum
Tear Resistance (Die C ASTM D624)	75 pounds per inch of thickness, minimum
Color	Light Gray

C. Sealants shall be Permapol RC-270 by Product Research & Chemical Corp.; Elastothane 227R by Pacific Polymers; PSI-270 by Polymer Systems, Inc. or Silkflex 2C by Sika Corporation.

D. Wherever colored concrete is used, provide joint sealant with matching color. Color shall be approved by the Owner.

2.05 JOINT MATERIALS

A. Bearing Pad: Bearing pad to be neoprene conforming to ASTM D1752 Type I, 40 durometer hardness unless otherwise noted.

B. Neoprene Sponge: Sponge to be neoprene, closed-cell, expanded, conforming to ASTM D1056, type RE-45-E1, with a compression deflection, 25 percent deflection (limits), 119 to 168 kPa (17 to 24 psi) minimum.

C. Preformed Joint Filler: Preformed joint filler material for water retaining applications shall be the preformed, non-extruding type constructed of cellular neoprene sponge rubber or polyurethane of firm texture. Bituminous fiber type will not be permitted. All non-extruding and resilient-type preformed expansion joint fillers shall conform to the requirements and tests set forth in ASTM D 1752 for Type I except as otherwise specified herein.

2.06 BACKING ROD

A. Backing rod shall be an extruded closed-cell, polyethylene foam rod. The material shall be compatible with the joint sealant material used and shall have a tensile strength of not less than 40 psi and a compression deflection of approximately 25 percent at 8 psi. The rod shall be 1/8-inch larger in diameter than the joint width except that a one-inch diameter rod shall be used for a 3/4-inch wide joint.

2.07 WATERSTOP

A. Waterstop shall be extruded elastomeric plastic, ribbed-type, flat waterstop. Provide shop-fabricated waterstop fittings for all intersections. Only straight butt joint splices may be made in the field. The waterstop conform to CRD-C572 and unless otherwise specified, shall be 6 inches wide Waterstop shall be 3/8-inch thick, Style R6-38 as manufactured by Vinylex Corporation or an approved equivalent.

PART 3 - EXECUTION

3.01 CONSTRUCTION JOINTS

A. Make construction joints only at locations shown on the Drawings or as approved by the Engineer. Any additional or relocation of construction joints proposed by the Contractor must be submitted to the Engineer for written approval.

B. Unless otherwise shown, all joints shall be perpendicular to main reinforcement. Continue reinforcing steel through the joint as indicated on the Drawings. When joints in beams are allowed, provide a shear key and inclined dowels as approved by the Engineer.

C. At all construction joints and at concrete joints designated on the Drawings to be "roughened," uniformly roughen the surface of the concrete to a full amplitude (distance between high and low points or side to side) of approximately 1/4-inch with suitable tools to expose a fresh face. Thoroughly clean joint surfaces of loose or weakened materials by waterblasting or sandblasting and prepare for bonding. At least 2 hours before and again shortly before the new concrete is deposited, the joints shall be saturated with water. After glistening water disappears, the joints shall be given a thorough coating of neat cement slurry mixed to the consistency of very heavy paste. The surfaces shall receive a coating at least 1/8-inch thick, well scrubbed-in by means of stiff bristle brushes whenever possible. Horizontal wall joints with no access to the earlier concrete placement surface shall have the roughened surface thoroughly coated with a neat cement slurry of pouring consistency. New concrete shall be deposited before the neat cement dries.

D. Keyways in construction joints shall be provided where shown on the Drawings or approved by the Engineer.

E. Joint Sealant:

1. Where shown on the Drawings, construction joints shall be provided with grooves which shall be filled with a joint sealant. The material used for forming the grooves shall be left in the grooves until just before the grooves are cleaned and filled with joint sealant. After removing the forms from the grooves, all laitance and fins shall be removed and the grooves shall be sand-blasted. The grooves shall be allowed to become thoroughly dry, after which they shall be blown out; immediately thereafter, they shall be primed, bond breaker tape placed in the bottom of the groove, and filled with the construction joint sealant. The primer used shall be supplied by the same manufacturer supplying the sealant. No sealant will be permitted to be used without a primer. Care shall be used to completely fill the sealant grooves. Areas designated to receive a sealant fillet shall be thoroughly cleaned as outlined for the grooves, prior to application of the sealant.

2. The primer and sealant shall be placed strictly in accordance with the printed recommendations of the manufacturer, taking special care to properly mix the sealant prior to application. The sides of the sealant groove shall not be coated with bond breaker, curing compound, or any other substance which would interfere with proper

bonding of the sealant. All sealant shall achieve final cure at least 7 Calendar Days before the structure is filled with water.

3. All sealant shall be installed by a competent waterproofing specialty contractor who has a successful record of performance in similar installations.

4. Thorough, uniform mixing of 2-part, catalyst-cured materials is essential; special care shall be taken to properly mix the sealer before its application.

5. Any joint sealant which after the manufacturer's recommended curing time for the job conditions of the Work hereunder fails to fully and properly cure shall be completely removed, the groove shall be thoroughly sandblasted to remove all traces of the uncured or partially cured sealant and primer, and shall be re-sealed with the specified joint sealant. All costs of such removal, joint treatment, re-sealing, and appurtenant work shall be at the expense of the Contractor.

F. Waterstops

1. Waterstops shall be installed at all joints between walls and floor slab for all buried concrete vaults and as shown on the Drawings.

2. Waterstops shall be placed in the center of the joint. Waterstops shall be secured in place so that the waterstop will be perpendicular to the joint and remain in the required position during concrete placement.

END OF SECTION

This page intentionally left blank.

TECHNICAL PROVISIONS

SECTION 03300

CAST-IN-PLACE CONCRETE

PART 1 - GENERAL

1.01 SCOPE OF WORK

A. Furnish all labor, materials, equipment, and incidentals required and install cast-in-place concrete complete as shown on the Drawings and as specified herein.

1.02 RELATED WORK

A. Earthwork is included in Section 02200.

B. Concrete Formwork is included in Section 03100.

C. Concrete Reinforcement is included in Section 03200.

D. Concrete Joints and Joint Accessories are included in Section 03250.

E. Concrete Finishes are included in Section 03350.

F. Grout is included in Section 03600.

G. Modifications and Repair to Concrete are included in Section 03740.

H. Waterproofing is included in Section 07900.

I. Sealants are included in Section 07920.

J. Electrical Work is included in Division 16.

1.03 SUBMITTALS

A. Submit to the Engineer, in accordance with Section 01300, Shop Drawings and product data including the following:

1. Concrete Mix Designs: Concrete mix design for each formulation of concrete proposed for use including constituent quantities per cubic yard, water cement ratio, concrete slump, type and manufacturer of cement.

    a. Standard deviation data for each proposed concrete mix based on statistical records.

b. Water cementitious ratio curve for concrete mixes based on laboratory tests. Provide average cylinder strength test results at 28 Calendar Days for laboratory concrete mix designs. Provide results of 7 and 14 Calendar Days tests if available.

2. Name and contact information for ready mix concrete supplier.

3. Sources of cement, pozzolan, and aggregates.

4. Product data including catalogue cut, technical data, storage requirements, product life, recommended dosage, temperature considerations and conformity to ASTM standards, and certifications for all admixtures used.

5. Material Safety Data Sheets (MSDS) for all concrete components and admixtures.

6. Sheet curing material. Product data including catalogue cut, technical data and conformity to ASTM standard.

7. Liquid curing compound. Product data including catalogue cut, technical data, storage requirements, product life, application rate and conformity to ASTM standards. Identify proposed locations of use.

8. Color additives: Submit product data and manufacturer's instructions for color additives, including color charts and dosage rates. Submit sample color chips as requested by the Engineer.

9. Certified Delivery Tickets: Furnish certified delivery tickets for ready-mixed concrete at the time of delivery of each load of concrete complying with requirements of Paragraph 3.02 F of this Section.

B. Test Reports

1. Fine aggregates - sieve analysis, physical properties, and deleterious substance.

2. Coarse aggregates - sieve analysis, physical properties, and deleterious substances.

3. Cements - chemical analysis and physical properties for each type.

4. Pozzolans - chemical analysis and physical properties.

C. Certifications

1. Certify admixtures used in the same concrete mix are compatible with each other and the aggregates.

2. Submit certification from qualified laboratory for each type of aggregate from the proposed source in accordance with ASTM C1077, confirming that the aggregates are

innocuous/non-reactive. Certified test results from ASTM C289 for potential reactivity of aggregates shall be included.

1.04 REFERENCE STANDARDS

A. American Concrete Institute (ACI).

1. ACI 117 - Specifications for Tolerances for Concrete Construction and Materials

2. ACI 301 - Specifications for Structural Concrete for Buildings

3. ACI 304R - Guide for Measuring, Mixing, Transporting and Placing Concrete

4. ACI 305R - Hot Weather Concreting

5. ACI 306R - Standard Specification for Cold Weather Concreting

6. ACI 318 - Building Code Requirements for Structural Concrete

B. American Society for Testing and Materials (ASTM)

1. ASTM A185 - Standard Specification for Welded Steel Wire Fabric for Concrete Reinforcement

2. ASTM C31 - Standard Practice for Making and Curing Concrete Test Specimens in the Field

3. ASTM C33 - Standard Specification for Concrete Aggregates

4. ASTM C39 - Standard Test Method for Compressive Strength of Cylindrical Concrete Specimens

5. ASTM C40 - Standard Test Method for Organic Impurities in Fine Aggregates for Concrete

6. ASTM C42 - Standard Test Method for Obtaining and Testing Drilled Cores and Sawed Beams of Concrete

7. ASTM C88 - Standard Test Method for Soundness of Aggregate by Use of Sodium Sulfate or Magnesium Sulfate

8. ASTM C94 - Standard Specification for Ready-Mixed Concrete

9. ASTM C136 - Standard Test Method for Sieve Analysis for Fine and Coarse Aggregate

10. ASTM C138 - Standard Test Method for Unit Weight, Yield and Air Content of Concrete

11. ASTM C143 - Standard Test Method for Slump of Hydraulic Cement Concrete

12. ASTM C150 - Standard Specification for Portland Cement

13. ASTM C156 - Standard Test Method for Water Retention by Liquid Membrane-Forming Curing Compounds for Concrete

14. ASTM C157 - Standard Test Method for Length Change of Hardened Hydraulic-Cement Mortar and Concrete

15. ASTM C171 - Standard Specification for Sheet Materials for Curing Concrete

16. ASTM C172 - Standard Test Method of Sampling Freshly Mixed Concrete

17. ASTM C173 - Standard Test Method for Air Content of Freshly Mixed Concrete by the Volumetric Method

18. ASTM C231 - Standard Test Method for Air Content of Freshly Mixed Concrete by the Pressure Method

19. ASTM C260 - Standard Specification for Air-Entraining Admixtures for Concrete

20. ASTM C289 - Standard Test Method for Potential Alkali-Silica Reactivity of Aggregates (Chemical Method)

21. ASTM C309 - Standard Specification for Liquid Membrane-Forming Compounds for Curing Concrete

22. ASTM C311 - Standard Test Method for Sampling and Testing Fly Ash or Natural Pozzolans for Use as a Mineral Admixture in Portland-Cement Concrete

23. ASTM C330 - Specification for Lightweight Aggregates for Structural Lightweight Concrete

24. ASTM C332 - Specification for Lightweight Group 1 Aggregates

25. ASTM C494 - Standard Specification for Chemical Admixtures for Concrete

26. ASTM C596 - Standard Test Method for Drying Shrinkage of Mortar Containing Hydraulic Cement

27. ASTM C618 - Standard Specification for Coal Fly Ash and Raw or Calcined Natural Pozzolan for Use as a Mineral Admixture in Concrete
28. ASTM C979 - Pigments for Integrally Colored Concrete.

29. ASTM C1017 - Standard Specification for Chemical Admixtures for Use in Producing Flowing Concrete

30. ASTM C1077 - Standard Practice for Laboratories Testing Concrete and Concrete Aggregate for Use in Construction and Criteria for Laboratory Evaluation

31. ASTM C2419 - Standard Practice for Sand Equivalent Value of Soils and Fine Aggregate

1.05 QUALITY ASSURANCE

A. Reinforced concrete shall comply with ACI 318 and other stated requirements, codes and standards. The most stringent requirement of the codes, standards and this Section shall apply when conflicts exist.

B. Only one source of cement and aggregates shall be used on any one structure. Concrete shall be uniform in color and appearance.

C. At the Owner's discretion, field testing and inspection services will be provided by the Owner at the Owner's discretion. The cost of such work, except as specifically stated otherwise, will be paid by the Owner.

D. Evaluation and Acceptance of Concrete and Concrete Materials:

1. Evaluation and acceptance of the concrete will be made based on the test results of test specimens and requirements set forth herein this Section.

2. Should concrete fail to meet the requirements of this Section, including compressive strength requirements and shrinkage limitation, immediate corrective measure shall be taken to correct the noted deficiency. The Owner shall have the right to one or more of the following corrective measures, which will not be considered Extra Work.

    a. Require changes in proportion of concrete constituents for the remaining work and performing additional tests as required.
    b. Require the Contractor to take core samples from the structure for testing.
    c. Require additional curing for those portions of the structure represented by the test specimens which failed.
    d. Require strengthening of deficient portion of the structure.
    e. Complete removal and replacement of those portions of the structure represented by the test specimens which failed.

3. If during the progress of the Work, the materials from the sources originally accepted change in characteristics, the Contractor shall, at his expense, make new acceptance tests of aggregates and establish new design mixes.
4. All testing, changes, repairs and corrective measures so ordered shall be made at the Contractor's expense.

E. Construction Tolerances:

1. The Contractor shall set and maintain concrete forms and perform finishing so as to ensure that the completed work is within the tolerances specified herein.

2. Tolerance is the specified permissible variation from lines, grades, or dimensions shown. Surface defects and irregularities are defined as finishes and are to be distinguished from tolerances. Where tolerances are not stated in the Specifications, permissible deviations will be in accordance with ACI 117.

3. The following construction tolerances are hereby established and apply to finished walls and slab unless otherwise noted.

Item	Tolerance
Variation of the constructed linear outline from the established position in plan.	¼ inch
Variation from the level or from the grade shown.	¼ inch
Variation from the plumb	¼ inch
Variation in the thickness slabs or walls	¼ inch

1.06 DELIVERY, STORAGE AND HANDLING

A. Cement: Store in weathertight buildings, bins or silos to provide protection from dampness and contamination and to minimize warehouse set.

B. Aggregate: Arrange and use stockpiles to avoid excessive segregation or contamination with other materials or with other sizes of like aggregates. Build stockpiles in successive horizontal layers not exceeding 3-ft in thickness. Complete each layer before the next is started. Do not use frozen or partially frozen aggregate.

C. Sand: Arrange and use stockpiles to avoid contamination. Allow sand to drain to a uniform moisture content before using. Do not use frozen or partially frozen aggregates.

D. Admixtures: Store in closed containers to avoid contamination, evaporation or damage. Provide suitable agitating equipment to assure uniform dispersion of ingredients in admixture solutions which tend to separate. Protect liquid admixtures from freezing and other temperature changes which could adversely affect their characteristics.

E. Pozzolan: Store in weathertight buildings, bins or silos to provide protection from dampness and contamination.

F. Sheet Curing Materials: Store in weathertight buildings or off the ground and under cover.
G. Liquid Curing Compounds: Store in closed containers.

H. Color Additives: Comply with manufacturer's instructions. Deliver color additives to the Site or batch plant in original, unopened packaging. Store in dry conditions.

PART 2 - PRODUCTS

2.01 GENERAL

A. The use of manufacturer's name and model or catalog number is for the purpose of establishing the standard of quality and general configuration desired.

B. Like items of materials shall be the end products of one manufacturer in order to provide standardization for appearance, maintenance and manufacturer's service.

2.02 MATERIALS

A. Materials shall comply with this Section and any applicable state or local requirements.

B. Cement: Domestic Portland cement complying with ASTM C150. Air entraining cements shall not be used. Cement brand shall be subject to approval by the Engineer and one brand shall be used throughout the Work. The following cement type(s) shall be used:

1. All classes of concrete – Type V with all optional characteristics specified in Table 2 of ASTM C150.

C. Aggregates: Special care shall be taken to obtain non-reactive aggregates. Fine and coarse aggregates shall be considered innocuous on the basis of tests for potential reactivity of aggregates in accordance with ASTM C289. The Contractor shall submit certified laboratory test results indicating that the aggregates conform to these specifications as required in Paragraph 1.03C of this Section.

1. Fine Aggregate: Fine aggregate shall be washed inert natural sand conforming to the requirements of ASTM C33.

2. Coarse Aggregate: Coarse aggregate shall be well-graded crushed stone or washed gravel conforming to the requirements of ASTM C33. Grading requirements shall be as listed in ASTM C33 Table 2 for the specified coarse aggregate size number. Limits of Deleterious Substances and Physical Property Requirements shall be as listed in ASTM C33 Table 3 for severe weathering regions. Size numbers for the concrete mixes shall be as shown in Table 1 herein.

D. Water: Potable water free from injurious amounts of oils, acids, alkalis, salts, organic matter, or other deleterious substances.

E. Admixtures: Admixtures shall be free of chlorides and alkalis (except for those attributable to water). When it is required to use more than one admixture in a concrete

mix, the admixtures shall be compatible. Admixtures shall be compatible with the concrete mix.

1. Air-Entraining Admixture: The admixture shall comply with ASTM C260. Proportioning and mixing shall be in accordance with manufacturer's recommendations.

2. Water-Reducing Agent: The admixture shall comply with ASTM C494, Type A. Proportioning and mixing shall be in accordance with manufacturer's recommendations.

3. High-Range Water-Reducer (Plasticizer): The admixture shall comply with ASTM C494, Type F and shall result in non-segregating plasticized concrete with little bleeding and with the physical properties of low water/cement ratio concrete. The treated concrete shall be capable of maintaining its plastic state in excess of 2 hours. Proportioning and mixing shall be in accordance with manufacturer's recommendations. HRWR shall not be used without prior approval by the Engineer.

4. Admixtures causing retarded or accelerated setting of concrete shall not be used without written approval from the Engineer. When allowed, the admixtures shall be retarding or accelerating water reducing or high range water reducing admixtures.

F. Pozzolan (Fly Ash):

1. Pozzolan shall be Class C or Class F fly ash complying with ASTM C618 except the Loss on Ignition (LOI) shall be limited to 3 percent maximum.

2. Testing of fly ash and/or fly ash and concrete mixture is required to provide test data confirming that the fly ash in combination with the cement to be used meets all strength requirements and is compatible with the other concrete additives. The testing shall be performed by the independent testing laboratory engaged by the Contractor.

   a. Pozzolan shall be tested in compliance with ASTM C311 with the following restriction: A minimum of one sample weighing 4 lbs. shall be taken from each 200 tons of pozzolan supplied for the project.

G. Sheet Curing Materials: Waterproof paper, polyethylene film or burlap-polyethylene sheeting all complying with ASTM C171.

1. Polyethylene sheet use for concrete curing blanket shall be white (clear where specified) and shall have a nominal thickness of 6 mils minimum. The loss of moisture when determined in accordance with the requirements of ASTM C156 shall not exceed 0.055 gram per square centimeter of surface.

2. Polyethylene-coated waterproof paper sheeting for use as a curing blanket shall consist of polyethylene sheeting free of visible defects, uniform in appearance, having a nominal thickness of 2 mils and permanently bonded to waterproof paper

confirming to the requirements of Federal Specification UU-B-790A. The loss of moisture when determined in accordance with the requirements of ASTM C156 shall not exceed 0.055 gram per square centimeter of surface.

3. Polyethylene-coated burlap for use as concrete curing blanket shall be 4-mil thick minimum, white opaque polyethylene film impregnated or extruded into one side of the burlap. Burlap shall weigh not less than 9 ounces per square yard. The loss of moisture when determined in accordance with the requirements of ASTM C156 shall not exceed 0.055 gram per square centimeter of surface.

H. Liquid Curing Compound: Liquid membrane-forming curing compound shall comply with the requirements of ASTM C309, Type 1-D (clear or translucent with fugitive dye) and shall contain no wax, paraffin, or oil. It shall be Concure Concentrate as manufactured by ConCrete Tie, Compton, CA or an approved equivalent.

I. Waterproofing: Waterproofing system and materials shall be in accordance with Section 07900.

J. Color Additives:

1. Color additives shall contain pure, concentrated mineral pigments specially processed for mixing into concrete and complying with ASTM C979.

2. Color additives containing carbon black are not acceptable.

3. Packaging: If color additives are to be added to mix at site, furnish color additives in pre-measured Mix-Ready disintegrating bags to minimize job site waste.

4. Calcium chloride admixtures shall not be used.

5. Fly ash shall not be used for cast-in-place color concrete.

6. Colored additives for integrally colored concrete shall be as manufactured by Davis Colors, 800-356-4848.

2.03 CONCRETE MIXES

A. General:

1. Concrete shall be composed of Portland cement, fine and coarse aggregates, water and admixtures. These materials shall be of the qualities specified herein. Fly ash may be included in the mix up to 15% the volume of cement.
2. In general, the mix shall be designed to produce a concrete capable of being deposited so as to obtain maximum density and minimum shrinkage and, where deposited in forms, to have good consolidation properties and maximum smoothness of surface.

3. In mix designs, the percentage of sand of the total weight of fine and coarse aggregate shall not exceed 50.

4. The aggregate gradations shall be formulated to provide fresh concrete that will not promote rock pockets around reinforcing steel or embedded items.

5. All concrete shall be ready-mixed concrete complying with ASTM C94 except as otherwise permitted by the Engineer.

B. Concrete Mix Requirements:

1. Select proportions of ingredients to meet the design strength and materials limits specified in Table 1 and to produce concrete having proper consistency, durability, strength, appearance and other required properties. Proportion ingredients to produce a homogenous mixture which will readily work into corners and angles of forms and around reinforcement without permitting materials to segregate or allowing excessive free water to collect on the surface.

2. The design mix shall be based on standard deviation data of prior mixes with essentially the same proportions of the same constituents or, if not available, be developed by laboratory tests. The resulting mix shall not conflict with the limiting values for maximum water cementitious ratio and net minimum cementitious content as specified in Table 1.

Table 1 - Concrete Mix Requirements		
	Class B	Class D
Design Strength (1)	3,000 psi	4,000 psi
Cement (2)	C150 Type V with all optional characteristics as specified in Table 2 of ASTM C150	C150 Type V with all optional characteristics as specified in Table 2 of ASTM C150
Fine Aggregate (2)	C33	C33
Coarse Aggregate (3)	57 1 in. to 4 no.	57 1 in. to 4 no.
Cementitious Content (4)	495 min.	611 min.
W/C Ratio (5)	0.54 max.	0.44 max.
Fly Ash	---	15% if Used
AE Range (6)	3.5 to 5 (if used)	3.5 to 5 (if used)
WR (7)	Optional	Optional
HRWR (8)	See Note 8	See Note 8
Slump Range Inches (9)	1 – 3	2 – 4

NOTES:
(1) Minimum compressive strength in psi at 28 Calendar Days
(2) ASTM designation
(3) Size Number in ASTM C33
(4) Cementitious content in lbs/cu yd
(5) W/C is Water-Cementitious ratio by weight
(6) AE is percent air-entrainment, if used
(7) WR is water-reducer admixture
(8) HRWR is high-range water-reducer admixture. Can be used only as approved by the Engineer.
(9) Slump values listed are for concrete mixes without WR admixture. Maximum slump shall not be more than 5 inches for concrete with WR admixture.

PART 3 - EXECUTION

3.01 MEASURING MATERIALS

A. Concrete shall be composed of Portland cement, fine aggregate, coarse aggregate, water and admixtures as specified and shall be produced by a plant acceptable to the Engineer.

All constituents, including admixtures, shall be batched at the plant except a high-range water reducer may also be added in the field if approved for use.

B. Measure materials for batching concrete by weighing in conformity with and within the tolerances given in ASTM C94 except as otherwise specified. Scales shall have been certified by the local Sealer of Weights and Measures within 1 year of use.

C. Measure the amount of free water in fine aggregates within 0.3 percent with a moisture meter. Compensate for varying moisture contents of fine aggregates. Record the number of gallons of water as-batched on printed batching tickets.

D. Admixtures shall be dispensed either manually using calibrated containers or measuring tanks or by means of an automatic dispenser approved by the manufacturer of the specific admixture.

1. Charge air-entraining and chemical admixtures into the mixer as a solution using an automatic dispenser or similar metering device.

2. Inject multiple admixtures separately during the batching sequence.

3.02 MIXING AND TRANSPORTING

A. Concrete shall be ready-mixed concrete produced by equipment acceptable to the Engineer. No hand-mixing will be permitted. Clean each transit mix truck drum and reverse drum rotation before the truck proceeds under the batching plant. Equip each transit-mix truck with a continuous, nonreversible, revolution counter showing the number of revolutions at mixing speeds.

B. Ready-mix concrete shall be transported to the Site in watertight agitator or mixer trucks loaded not in excess of their rated capacities as stated on the name plate.

C. Dispatch trucks from the batching plant so they arrive at the Site just before the concrete is required, thus avoiding excessive mixing of concrete while waiting or delays in placing successive layers of concrete in the forms.

D. Retempering (mixing with or without additional cement, aggregate, or water) of concrete or mortar which has reached initial set will not be permitted.

E. Handle concrete from mixer to placement as quickly as practicable while providing concrete of required quality in the placement area.

F. Furnish a delivery ticket for ready-mixed concrete to the Owner as each truck arrives. Each ticket shall provide a printed record of the weight of cement and each aggregate as batched individually. Use the type of indicator that returns for zero punch or returns to zero after a batch is discharged. Clearly indicate the weight of fine and coarse aggregate, cement and water in each batch, the quantity delivered, the time any water is added, and

the numerical sequence of the delivery. Show the time of day batched and time of discharge from the truck. Indicate the number of revolutions of the truck mixer.

G. Color Additives: Mix in accordance with manufacturer's instructions. Mix until color additives are uniformly dispersed throughout mixture and disintegrating bags, if used, have disintegrated.

H. Temperature and Mixing Time Control

1. In cold weather, do not allow the as-mixed temperature of the concrete and concrete temperatures at the time of placement in the forms to drop below 40° F.

2. If water or aggregate has been heated, combine water with aggregate in the mixer before cement is added. Do not add cement to mixtures of water and aggregate when the temperature of the mixture is greater than 90° F.

3. In hot weather, cool ingredients before mixing to maintain temperature of the concrete below the maximum placing temperature of 90° F. If necessary, substitute well-crushed ice for all or part of the mixing water.

4. The maximum time interval between the addition of mixing water and/or cement to the batch and the placing of concrete in the forms shall not exceed the values shown in Table 2.

Table 2 - Maximum Time to Discharge of Concrete	
Air or Concrete Temperature (whichever is higher)	Maximum Time
80 to 90 Degrees F (27 to 32 Degrees C)	45 minutes
70 to 79 Degrees F (21 to 26 Degrees C)	60 minutes
40 to 69 Degrees F (5 to 20 Degrees C)	90 minutes

If an approved high-range water-reducer (plasticizer) is used to produce plasticized concrete, the maximum time interval shall not exceed 90 minutes.

3.03 CONCRETE APPEARANCE

A. Concrete mix showing either poor cohesion or poor coating of the coarse aggregate with paste shall be remixed. If this does not correct the condition, the concrete shall be rejected. If the slump is within the allowable limit, but excessive bleeding, poor workability, or poor finishability are observed, changes in the concrete mix shall be obtained only by adjusting one or more of the following:

1. The gradation of aggregate.
2. The proportion of fine and coarse aggregate.
3. The percentage of entrained air, within the allowable limits.

B. Concrete for the Work shall provide a homogenous structure which, when hardened, will have the required strength, durability and appearance. Mixtures and workmanship shall be such that concrete surfaces when exposed will require no finishing. When concrete surfaces are stripped, the concrete when viewed in good lighting from 10 feet away shall be pleasing in appearance and at 20 feet shall show no visible defects.

C. Concrete Colors: Match colors selected by Owner.

3.04 PREPARATION OF SURFACES PRIOR TO PLACING CONCRETE

A. Prior to the placing of any concrete on earth surface, such surface shall be thoroughly wetted and kept moist by frequent sprinkling until concrete is placed. The surface shall be firm and free from any debris, mud or standing water at the time of placing concrete. Any ground water shall be kept below subgrade until the concrete has set. No concrete shall be deposited until subgrade surface has been accepted by the Owner.

B. Surfaces of construction joints against which concrete is to be placed shall be thoroughly cleaned. Surfaces of vertical joints shall be wire brushed and then washed clean. Surfaces of horizontal construction joints shall be cleaned of all laitance and defective concrete by wet sandblasting and then washed clean.

C. Horizontal construction joints shall be covered with a layer of mortar approximately 6 inches thick immediately prior to placing concrete. The mortar shall contain cement and sand with coarse aggregate omitted, unless otherwise directed by the Owner. The cement quantity of this mortar shall be adjusted to compensate for lack of coarse aggregate so that the resulting concrete strength is the same as that required for the remaining portion of the structure.

D. All reinforcement, anchor bolts, sleeves, inserts, and similar items shall be set and secured in the forms where shown on the Drawings and required.

E. The surfaces of all metalwork to be in contact with concrete shall be thoroughly cleaned of all dirt, grease, oil, loose scale and rust, grout, mortar and other foreign substances immediately before the concrete is placed.

F. Openings for pipes, inserts for hangers and brackets, and the setting of anchors shall, where practicable, be provided.

G. No concrete shall be placed until all formwork, preparation of the surfaces against which concrete is placed, and installation of parts to be embedded, including, but not limited to, the steel reinforcing bars, anchor bolts, etc. have been reviewed by the Owner.

3.05 PLACING AND COMPACTING

A. Placing – General:

1. Only methods of transporting and placing which will deliver concrete of the proper consistency into the Work without separation and which will not endanger existing improvements will be permitted.

2. No concrete shall be placed except in the presence of the Owner and after his review of forms, anchors, inserts, ties, and steel reinforcement. Twenty-four hours shall be allowed for the Owner to conduct such a review. Concrete which upon or before placing is found not to conform to the quality requirements of these Specifications, as determined by the Owner, shall be rejected and immediately removed from the Work and replaced at no additional cost to the Owner.

3. The Contractor shall submit a proposed schedule of placing concrete to the Engineer for review. Placement of slabs, supporting beams, walls and footings shall be required to allow for expansion and shrinkage and minimum curing time as specified herein.

4. Verify that all formwork completely encloses concrete to be placed and is securely braced prior to concrete placement. Remove ice, excess water, dirt and other foreign materials from forms. Confirm that reinforcement and other embedded items are securely in place. Sprinkle semi-porous subgrades or forms to eliminate suction of water from the mix.

5. Concrete shall be deposited in the forms as close as possible to its final position.

6. Place concrete continuously at a rate which ensures the concrete is being integrated with fresh plastic concrete. Do not deposit concrete which has partially hardened or has been contaminated by foreign materials or on concrete which has hardened sufficiently to cause formation of seams or planes of weakness within the section. If the section cannot be placed continuously, place construction joints with waterstops as specified or as approved.

7. The temperature of concrete when it is being placed shall be not more than 90 degrees F or less than 55 degrees F for sections less than 12 inches thick or less than 50 degrees F for all other sections. If concrete is placed when the weather is such that the temperature of concrete would exceed 90 degrees F, the Contractor shall employ effective means, such as pre-cooling of aggregates and mixing ice for equivalent amount of water, as necessary to maintain the temperature of concrete, as it is placed, below 90 degrees F.

8. Remove temporary spreaders from forms when the spreader is no longer useful. Temporary spreaders may remain embedded in concrete only when made of galvanized metal or concrete and if prior approval has been obtained.

9. Do not place concrete for supported elements until concrete previously placed in the supporting element has reached adequate strength.

10. Place concrete in forms using tremie tubes and taking care to prevent segregation. Bottom of tremie tubes shall preferably be in contact with the concrete already placed. Do not permit concrete to drop freely more than 4 feet.

B. Placement in Slabs:

1. After suitable bulkheads, screeds and jointing materials have been positioned, the concrete shall be placed continuously between construction joints beginning at a bulkhead, edge form, or corner. Each batch shall be placed into the edge of the previously placed concrete to avoid stone pocket and segregation.

2. Placing of concrete in sloping slabs shall proceed uniformly from the bottom of the slab to the top along full width of the pour. The concrete shall be carefully vibrated and worked into place. Screeding of the surfaces shall be in the upslope direction.

3. Avoid delays in casting. If there is a delay in casting, the concrete placed after the delay shall be thoroughly spaded and consolidated at the edge of that previously placed to avoid cold joints. Concrete shall then be brought to correct level and struck off with a straightedge. Bullfloats or darbies shall be used to smooth the surface leaving it free of humps or hollows.

4. Where slabs are to be placed integrally with the walls below them, place the walls and compact as specified. Allow 1 hour to pass between placement of the wall and the overlying slab to permit consolidation of the wall concrete. Keep the top surface of the wall moist so as to prevent cold joints.

C. Placement in Wall Forms:

1. Concrete shall not be dropped through reinforcement steel or into any deep form. Place concrete in forms using tremie tubes and taking care to prevent segregation. Bottom of tremie tubes shall preferably be in contact with the concrete already placed. Do not permit concrete to drop freely more than 4 feet. Place concrete for walls in 12- to 24-inch lifts, keeping the surface horizontal. For plasticized concrete higher drop and lifts will be allowed as approved by the Owner.

2. The rate at which concrete is being placed in forms shall not exceed 5 feet of vertical rise per hour.

3. Wall footings shall be cured for a minimum of 7 Calendar Days before vertical walls are placed.

D. Concrete Schedule

1. The following (Table 3) are the general applications for the various concrete classes and design strengths and shall be used as a minimum unless otherwise indicated on the Drawings.

Table 3 - Concrete Schedule		
Class	Design Strength (psi)	Description
B	3,000	Concrete overlay, concrete fill, ditches, pavements, flatwork, thrust blocks, duct encasement; unreinforced concrete
D	4,000	Walls, slabs on grade, suspended slab systems, columns, footings, ring beams, vaults & all other structural concrete; all reinforced concrete

2. Concrete flatwork and surfaces shall be restored with the following thicknesses of concrete: five (5) inches of concrete for residential driveways; six (6) inches for commercial/industrial driveways, five (5) inches of concrete for streets or match existing thickness whichever is greater; five (5) inches of concrete for sidewalks in driveway approaches; five (5) inches of concrete for sidewalks not in a driveway approach.

E. Compacting

1. As concrete is placed in the forms or excavations, it shall be thoroughly settled and compacted, throughout the entire depth of the layer which is being consolidated, into a dense, homogeneous mass filling all corners and angles, thoroughly embedding reinforcement and embedded items. Consolidate concrete by vibration, puddling, spading, rodding or forking. Puddling, spading, etc. shall be continuously performed along with vibration of the placement to eliminate air or stone pockets which may cause honeycombing, pitting or planes of weakness.

2. Unless otherwise specified, all concrete shall be compacted with mechanical vibrators. No concrete shall be ordered until sufficient approved vibrators (including standby units in working order) are on the Site. The number and size of the units shall be adequate to perform satisfactory compaction.

3. Concrete Slabs: Concrete for slabs less than 8 inches thick shall be consolidated with vibrating screeds; slabs 8 to 12 inches thick shall be compacted with internal vibrators and (optionally) with vibrating screeds. Vibrators shall always be placed into concrete vertically and shall not be laid horizontally or laid over.

4. Walls and Columns: Internal vibrators (rather than form vibrators) shall be used unless otherwise approved by the Engineer. In general, for each vibrator needed to melt down the batch at the point of discharge, one or more additional vibrators must be used to densify, homogenize and perfect the surface. The vibrators shall be inserted vertically at regular intervals through the fresh concrete and slightly into the previous lift if any.

5. Amount of Vibration: Vibrators are to be used to consolidate properly placed concrete but shall not be used to move or transport concrete in the forms. Do not over vibrate so as to segregate. Insert vibrators and withdraw at points from 18 to 30 inches apart. At each insertion, vibrate sufficiently to consolidate concrete, generally from 5 to 15 seconds until:

   a. Frequency returns to normal.

   b. Surface appears liquefied, flattened and glistening.

   c. Trapped air ceases to rise.

   d. Coarse aggregate has blended into surface, but has not disappeared.

3.06 PUMPED CONCRETE

A. The use of pumped concrete will be permitted. If the pump concrete does not produce satisfactory results, discontinue the pumping operation and proceed with the placing of concrete using conventional methods.

B. Mix design, minimum compressive strength, and cement content requirements shall comply with these Specifications. Gradation of coarse aggregates shall meet ASTM C33 and these Specifications. Admixtures, water and slump test requirements shall comply with these Specifications.

C. The concrete pump must have two cylinders and shall be designed to operate with only one cylinder in case the other one is not functioning; otherwise a stand-by pump shall be provided. Pumping equipment or part thereof which in the opinion of the Owner is not functioning properly shall be replaced.

D. Pumping equipment and hoses shall be in accordance with ACI 304.2R and adequate to pump concrete of specified characteristics. Aluminum conduits for conveying the concrete will not be permitted.

3.07 CURING AND DAMP-PROOFING CONCRETE

A. All concrete shall be cured for a minimum of 14 Calendar Days after placing. Concrete made with fly ash added shall be cured for a minimum of 19 Calendar Days after placing. Methods of curing for different parts of the Work shall be as specified below and approved by the Owner.

Table 4 - Curing Schedule	
Surface to be Cured or Damp-proofed	Method of Curing
All concrete surfaces not specifically provided for elsewhere in this Paragraph.	C-1 or C-3
Exterior buried surfaces of roof slabs	C-1 or C-3
Surfaces of walls	C-1, C-3, or C-4
Unstripped forms	C-5
Construction joints	C-6
Concrete encasement and thrust blocks	C-7
Colored concrete	C-8

B. Method C-1

1. Curing compound shall be applied as soon as finishing operations is completed, and the concrete has hardened enough to prevent marring on unformed surfaces, and within two hours after removal of forms from contact with formed surfaces. If application of curing compound is delayed, the entire concrete surface shall be kept damp by applying water using nozzles that atomize the flow so that the surface is not marred or washed. Such a water curing shall continue until curing compound is applied.

2. Curing compound shall be applied in accordance with the manufacturer's instructions at a coverage rate not exceeding 200 square feet per gallon. Care shall be taken to ensure that all surfaces are covered with a uniform film and sealed thoroughly.

3. Curing compound shall be as specified in Part 2. Care shall be exercised to avoid damage to curing compound seal coat during the curing period. Should the seal be damaged before the expiration of the curing period, the damaged section shall be repaired without delay by applying an additional curing compound over the damaged section.

4. Curing compound can be used on concrete surfaces to be coated, waterproofed, or where any coverings are to be placed provided the curing compound is completely removed by wet sandblasting prior to application of coating or waterproofing. Curing compound shall not be applied to construction joints, except where specifically called for on the Drawings or directed by the Owner. Wherever curing compound is applied to interior surfaces or has been applied by mistake to surfaces, it shall be entirely removed by wet sandblasting.

C. Method C-3

1. As soon as the surface finish treatment is completed and concrete has taken its initial set or within two hours after removal of forms from contact with formed surfaces, the concrete surface shall be wet cured by covering with absorptive mats or fabrics such as burlap and kept continuously wet. No curing compound shall be applied to surfaces except where specifically called for on the Drawings or directed by the Owner. When the wet cure period has ended, the absorptive mats or fabrics shall remain in place and allowed to naturally dry prior to removal.

D. Method C-4

1. Immediately after forms are removed or the concrete has taken an initial set, the exposed concrete surfaces shall be moistened with light spray of water through fog nozzle until the surface will not absorb more moisture. During this curing process, the concrete shall not be allowed to dry. This method of curing will not be allowed during windy conditions or when the water mist cannot be maintained around the entire portion to be cured.

E. Method C-5

1. Unstripped wooden forms shall be kept wet with water from the time the concrete has been placed until their removal. If steel forms are used, the exposed concrete surfaces shall be kept continuously wet with absorptive mats or fabrics or by a light spray of water until forms are removed.

2. If forms are removed prior to the end of the 14-Calendar Day or 19-Calendar Day minimum curing period, curing of the exposed concrete surfaces shall continue until the end of the remaining curing period in accordance with the applicable method.

F. Method C-6

1. The exposed surfaces of the construction joints shall be covered with absorptive mats or fabrics and shall be kept continuously wet with water for the full curing period or until covered with continued concrete work. No curing compound shall be applied to surfaces except where specifically called for on the Drawings or directed by the Owner. When the wet cure period has ended, the absorptive mats or fabrics shall remain in place and allowed to naturally dry prior to removal.

G. Method C-7

1. Concrete encasements or thrust blocks shall be covered with moist earth not later than 24 hours or earlier than 4 hours after concrete is placed. Structure or manhole bases around pipe is not considered to be a concrete encasement.

2. The earth cover shall not exceed 18 inches during the first 7 Calendar Days after concrete is placed or 10 Calendar Days if fly ash is included in concrete. Where the

pipe is concrete encased, the backfill of the pipe trench above the initial 18 inches required for curing shall not be placed until the strength of concrete reaches 75 percent of the specified concrete strength as determined by the concrete cylinder test or 10 Calendar Days whichever is first.

H. Method C-8

1. Colored concrete shall be cured using a compound which conforms to ASTM C309 and requirements of the color additive manufacturer.

2. Use of plastic sheets, water curing or curing product which discolor shall not be allowed. Wood and other objects left on curing concrete cause discoloration.

3.08 COLD WEATHER CONCRETING

A. "Cold weather" is defined as a period when for more than 3 successive Calendar Days the average daily outdoor temperature drops below 40° F. The average daily temperature shall be calculated as the average of the highest and the lowest temperature during the period from midnight to midnight.

B. No concrete shall be mixed, placed or cured while the atmospheric temperature is below 40° F unless adequate means satisfactory to the Owner are employed for heating the concrete ingredients and protecting placed concrete during curing period. All concrete placed in forms shall have a temperature in accordance with Paragraph 3.05.A.7 of this Section. Adequate means shall be provided to maintain this minimum temperature for at least 3 Calendar Days. Concrete shall not be placed on ground that is frozen at any depth, nor shall it be placed against any surface covered with ice.

C. Cold weather concreting shall conform to ACI 306 and the additional requirements specified herein. Temperatures at the concrete placement shall be recorded at 12-hour intervals (minimum).

D. Salt, manure or other chemicals shall not be used for protection.

E. The protection period for concrete being water cured shall not be terminated during cold weather until at least 24 hours after water curing has been terminated.

3.09 HOT WEATHER CONCRETING

A. "Hot weather" is defined as any combination of high air temperatures, low relative humidity and wind velocity which produces a rate of evaporation estimated in accordance with ACI 305R, approaching or exceeding 0.2 lbs/sq ft/hr.

B. Concrete placed during hot weather shall be batched, delivered, placed, cured and protected in compliance with the recommendations of ACI 305R and the additional requirements specified herein.

1. Temperature of concrete being placed shall not exceed 90° F and every effort shall be made to maintain a uniform concrete mix temperature below this level. The temperature of the concrete shall be such that it will cause no difficulties from loss of slump, flash set or cold joints.

2. All necessary precautions shall be taken to promptly deliver and promptly place the concrete upon its arrival at the Site and to provide vibration immediately after placement.

3. The Engineer may direct the Contractor to immediately cover plastic concrete with plastic sheeting material. The plastic sheeting shall be replaced as soon as practical and prior to the initial set with the appropriate curing method as defined in Part 3.07 of this Section.

C. All necessary precautions shall be taken to eliminate flash or early setting of concrete. Such precautions may include scheduling placement of concrete during cooler hours of the day, proper and timely application of specified curing methods and the use of special admixture that conforms to construction requirements.

D. All cracks that may occur due to flash setting of concrete shall be satisfactorily repaired by the Contractor and at his expense. No concrete shall be placed under extreme heat and wind conditions. The Contractor shall not be entitled to any additional compensation because of cold or hot weather conditions or delays attributed thereto.

3.10 REMOVAL OF FORMS

A. Except as otherwise specifically authorized by the Engineer, forms shall not be removed before the concrete has attained a strength of at least 30 percent of its specified design strength, nor before the number of Calendar Days specified below (whichever is the longer):

Table 5 - Minimum Time to Form Removal	
Forms for:	Calendar Days
Beams and slabs	10
Walls and vertical surfaces	3

B. Shores shall not be removed until the concrete has attained at least 70 percent of its specified design strength and also sufficient strength to support safely its own weight and construction live loads.

3.11 INSPECTION AND FIELD TESTING

A. The batching, mixing, transporting, placing and curing of concrete shall be subject to the inspection of the Owner at all times. The Contractor shall advise the Owner of his/her readiness to proceed at least 24 hours prior to each concrete placement. The Owner will inspect the preparations for concreting including the preparation of previously placed concrete, the reinforcing steel and the alignment, cleanliness and tightness of formwork. No placement shall be made without the inspection and acceptance of the Owner.

B. At the Owner's discretion, sets of field control cylinder specimens will be taken by the Owner's Materials Inspector during the progress of the Work, in compliance with ASTM C31.

1. A "set" of test cylinders will generally consist of four cylinders: one to be tested at 7 Calendar Days and two to be tested and their strengths averaged at 28 Calendar Days. The fourth may be used for a special test at 3 Calendar Days or to verify strength after 28 Calendar Days if 28 Calendar Day test results are low. Additional cylinders may also be taken at the Owner's discretion.

2. When the average 28 Calendar Day compressive strength of the cylinders in any set falls below the specified design strength or below proportional minimum 7 Calendar Day strengths (where proper relation between seven and 28 Calendar Day strengths have been established by tests), proportions, water content, or temperature conditions shall be changed to achieve the required strengths at no additional cost to the Owner.

C. Slump tests will be made in the field immediately prior to placing the concrete. Such tests will be made in accordance with ASTM C143. If the slump is greater the specified range, the concrete shall be rejected.

D. At the Owner's discretion, test for air content will be made on fresh concrete samples. Air content for concrete made of ordinary aggregates having low absorption will be made in compliance with either the pressure method complying with ASTM C231 or by the volumetric method complying with ASTM C173. If lightweight aggregates or aggregates with high absorptions are used, the latter test method will be used.

E. The Owner may have cores taken from any questionable area in the concrete work such as construction joints and other locations as required for determination of concrete quality. The results of tests on such cores shall be the basis for acceptance, rejection or determining the continuation of concrete work.

F. Contractor's Responsibilities:

1. The Contractor shall cooperate in the making of tests by allowing free access to the work for obtaining samples, specimens and cores.

2. The Contractor shall provide furnish material and labor required for the purpose of taking concrete cylinders, samples and cores, including insulated closed curing boxes for specimens, ladders, scaffolding and others as required.

3. The Contractor shall repair all core holes.

4. The Contractor shall take necessary precautions to protect the concrete cylinders, samples and cores against injury or loss through the operation.

5. The cost of shipping and testing of all specimens will be paid for by the Owner.

3.12 CARE, PATCHING AND REPAIRS

A. It is the intent of this Section to require quality work, including adequate forming, proper mixture and placement of concrete and curing, so completed concrete surfaces will require no patching.

B. The Contractor shall protect all concrete from damage from excessive heat, lack of moisture, overstress, or any other cause until final acceptance. Any concrete found to be damaged or which may have been originally defective or becomes defective prior to final acceptance of the Work or which departs from line or grade or which for any other reason does not conform to these Specifications shall be satisfactorily repaired or removed and replaced by the Contractor at his expense.

C. The concrete roof and floor slabs shall not be overstressed by any heavy equipment traffic, including cranes. After curing of roof and floor slabs, foot traffic and light loading will be allowed. Only light vehicles with prior approval of Owner will be allowed access on the new roof and floor slabs.

D. As soon as forms are removed, all exposed surfaces shall be carefully examined and any irregularities shall be immediately rubbed or ground down in a satisfactory manner so as to secure a smooth, uniform and continuous surface. Plastering or coating of surfaces to be smoothed will not be permitted. No repairs shall be made until after inspection by the Owner and then only as directed.

E. Immediately after removal of forms, remove plugs and break off metal ties as required by Section 03100. Promptly fill holes upon stripping as follows: Moisten the hole with water, followed by a 1/16-inch brush coat of neat cement slurry mixed to the consistency of a heavy paste. Immediately plug the hole with a 1 to 1.5 mixture of cement and concrete sand mixed slightly damp to the touch (just short of "balling"). Hammer the grout into the hole until dense, and an excess of paste appears on the surface in the form of a spiderweb. Trowel smooth with heavy pressure. Avoid burnishing.

F. Holes left by tie rod cones, drill holes, and other imperfections having a depth greater than their least surface dimension shall not be gunited, but shall be repaired in an approved manner with dry packed mortar. The mortar shall be prepared from the same sand and cement and mixed in the same proportions as in the concrete. White cement shall be added

to the mix for use in exposed exterior wall surfaces in an amount such that the finished patch will match the color of the formed concrete. Regular holes shall be reamed prior to repair so as to leave the surfaces of the holes clean and rough. Rub lightly with a fine Carborundum stone at an age of 1 to 5 Calendar Days if necessary to bring the surface down with the parent concrete. Exercise care to avoid damaging or staining the virgin skin of the surrounding parent concrete. Wash thoroughly to remove all rubbed matter.

G. Defective concrete and honeycombed areas as determined by the Owner shall be repaired, or completely removed and replaced as directed by the Owner. In no case will extensive patching of honeycombed concrete be permitted.

1. Remove honeycombed and defective concrete to sound concrete and 1-inch minimum depth. The side of all removal and repair shall be square.

2. Patch small areas by applying an epoxy bonding agent and then packing the void with non-shrink grout. Finish flush with surrounding concrete.

3. If concrete removal results in cavities exceeding 3-inch in depth and 1 square foot in area, first apply an epoxy bonding agent. Then pack the void with 5,000 psi concrete. Form surfaces as required to prevent sagging. Finish flush with the surrounding concrete.

H. All repairs shall be built up and shaped using approved methods which will not disturb the bond or cause sagging or horizontal fracture. Surfaces shall be made smooth and hard by steel troweling and shall have the same surface finish and receive the same kind and amount of curing treatment as required for the concrete in the repaired section.

I. Cleaning Color Concrete

1. Efflorescence: Remove efflorescence as soon as practical after it appears.

2. Use least aggressive cleaning techniques possible.

3. Wear protective eye wear, gloves and clothing suitable to work and as required by cleaner manufacturer.

4. If proprietary cleaning agents are used, pre-wet wall, test cleaning agent on a small, inconspicuous area, and check effects prior to proceeding. Begin cleaning at the top and work down. Thoroughly rinse wall afterwards with clean water. Follow cleaner manufacturer's instructions.

5. Do not use muriatic (hydrochloric) acid on colored concrete.

END OF SECTION

This page intentionally left blank.

TECHNICAL PROVISIONS

SECTION 03350

CONCRETE FINISHING

PART 1 - GENERAL

1.01 SCOPE OF WORK

A. Furnish all labor, materials, equipment and incidentals required and finish cast-in-place concrete surfaces as shown on the Drawings and as specified herein.

1.02 RELATED WORK

A. Concrete Formwork is included in Section 03100.

B. Cast-In-Place Concrete is included in Section 03300.

C. Grout is included in Section 03600.

D. Waterproofing is included in Section 07900.

E. Sealants are included in Section 07920.

E. Surface Preparation and Shop Painting and Coating are included in Section 09910.

F. Field Painting and Protective Coating are included in Section 09920.

1.03 REFERENCE STANDARDS

A. American Concrete Institute (ACI)

1. ACI 301 - Specifications for Structural Concrete for Buildings

B. American Society for Testing and Materials (ASTM)

1. ASTM C33 - Standard Specification for Concrete Aggregates

PART 2 - PRODUCTS (NOT USED)

PART 3 - EXECUTION

3.01 GENERAL

A. All concrete surfaces shall conform accurately to shape, alignment, and grade shown on the Drawings. Surfaces shall be free from fins, bulges, ridges, offsets, honeycombing or roughness of any kind and shall present a finished, smooth and continuous hard surface. Defective areas shall be repaired in accordance with these Specifications. Except as specified otherwise or directed by the Owner, the concrete finishes shall be in accordance with the following schedule.

Type of Construction and Exposure	Type of Finish
Concrete not exposed to view and not scheduled to receive an additional applied finish or material	I – Rough-Form Finish
Exterior and interior vertical concrete exposed to view except those surfaces where special architectural finishes are required.	I –Rough Form Finish
Interior or exterior horizontal concrete not requiring floor hardener or sealer	Type II – Floated Finish
Concrete slabs and floors having a slope flatter than 8:1	Type III - Steel Trowel Finish.

3.02 FINISHES

A. Type I - Rough-Form Finish

1. Immediately after stripping forms and before concrete has changed color, carefully remove all fins and projections.

2. Promptly fill holes left by tie cones and repair defective areas in accordance with Section 03300.

B. Type II - Floated Finish

1. Machine Floating

a. Screed floors and slabs with straightedges to the established grades shown on the Drawings. Immediately after final screeding, a dry cement/sand shake in the proportion of two sacks of Portland cement to 350 pounds of coarse natural concrete sand shall be sprinkled evenly over the surface at the rate of approximately 500 lbs /1,000 sq ft of floor. Do not sprinkle neat, dry cement on the surface.

b. The application of the cement/sand shake may be eliminated at the discretion of the Engineer if the base slab concrete exhibits adequate fattiness and homogeneity and the need is not indicated. Begin floating when the concrete surface has stiffened sufficiently.

c. Start floating along walls and around columns and then move systematically across the surface leaving a matte finish.

d. Troweling machines equipped with float (shoe) blades that are slipped over the trowel blades may be used for floating. Floating with a troweling machine equipped with normal trowel blades will not be permitted. The use of any floating or troweling machine which has a water attachment for wetting the concrete surface during finishing will not be permitted.

2. Hand Floating

a. In lieu of power floating, small areas may be compacted by hand floating. The dry cement/sand shake previously specified shall be used unless specifically prohibited by the Engineer. Screed the floors and slabs with straightedges to the established grades shown on the Drawings. While the concrete is still green, but sufficiently hardened to support a finisher and kneeboards with no more than ¼-in indentation, wood float to a true, even plane with no coarse aggregate visible. Use sufficient pressure on the wood floats to bring moisture to the surface.

3. Finishing Tolerances

a. Level floors and slabs to a tolerance of ±1/8-inch when checked with a 10-foot straightedge placed anywhere on the slab in any direction. Where drains occur, pitch floors to drains such that there are no low spots left undrained. Failure to meet either of the above requirements shall be cause for removal, grinding, or other correction as directed by the Engineer.

C. Type III – Steel Trowel Finish

1. Finish concrete as specified under Finish Type III.

2. When the concrete has stiffened sufficiently to maintain small surface indentations, draw a bristle broom lightly across the surface in the direction of drainage, or, in the case of walks and stairs, perpendicular to the direction of traffic to provide a non-slip surface.

3. Then, hand steel trowel to a perfectly smooth hard even finish free from high or low spots or other defects.

3.03 APPROVAL OF FINISHES

A. All concrete surfaces, when finished, will be inspected by the Owner.

B. Surfaces which do not meet the requirements in this Section shall be refinished or reworked.

C. After finishing surfaces, regardless of the finishing procedure specified, the concrete shall be cured in compliance with Section 03300 unless otherwise directed by the Engineer.

END OF SECTION

TECHNICAL PROVISIONS

SECTION 03600

GROUT

PART 1 - GENERAL

1.01 SCOPE OF WORK

A. Furnish all labor, materials, equipment and incidentals required and install grout complete as shown on the Drawings and as specified herein.

B. Perform all sampling and furnish all testing of materials and products by an independent testing laboratory acceptable to the Engineer but engaged by and at the expense of the Contractor.

1.02 RELATED WORK

A. Concrete Formwork is included in Section 03100.

B. Concrete Reinforcement is included in Section 03200.

C. Concrete Joints and Joint Accessories are included in Section 03250.

D. Cast-in-Place Concrete is included in Section 03300.

E. Metal Fabrications are included in Section 05500

1.03 SUBMITTALS

A. Submit to the Engineer, in accordance with Section 01300, Shop Drawings and product data showing materials of construction and details of installation for:

1. Commercially manufactured nonshrink cementitious grout. The submittal shall include catalog cuts, technical data, storage requirements, product life, working time after mixing, temperature considerations, conformity to required ASTM standards and Material Safety Data Sheets.

2. Commercially manufactured nonshrink epoxy grout. The submittal shall include catalog cuts, technical data, storage requirements, product life, working time after mixing, temperature considerations, conformity to required ASTM standards and Material Safety Data Sheets.

B. Samples

1. Samples of commercially manufactured grout products when requested by the Engineer.

1.04 REFERENCE STANDARDS

A. American Society for Testing and Materials (ASTM)

1. ASTM C531 - Standard Test Method for Linear Shrinkage and Coefficient of Thermal Expansion of Chemical Resistant Mortars, Grouts and Monolithic Surfacings

2. ASTM C827 - Standard Test Method for Change in Height at Early Ages of Cylindrical Specimens from Cementitious Mixtures

3. ASTM C1107 - Standard Specification for Packaged Dry, Hydraulic-Cement Grout (Nonshrink)

4. ASTM D695 - Standard Test Method for Compressive Properties of Rigid Plastics

B. U.S. Army Corps of Engineers Standard (USACE)

1. CRD-C 621 - Corps of Engineers Specification for Nonshrink Grout

1.05 QUALITY ASSURANCE

A. Qualifications

1. Grout manufacturer shall have a minimum of 10 years experience in the production and use of the type of grout proposed for the work.

1.06 DELIVERY, STORAGE AND HANDLING

A. Deliver materials to the Site in original, unopened packages, clearly labeled with the manufacturer's name, product identification, batch numbers and printed instructions.

B. Store materials in full compliance with the manufacturer's recommendations. Total storage time from date of manufacture to date of installation shall be limited to 12 months or the manufacturer's recommended storage time, whichever is less.

C. Material which becomes damp or otherwise unacceptable shall be immediately removed from the Site and replaced with acceptable material at no additional expense to the Owner.

D. Nonshrink cement-based grouts shall be delivered as preblended, prepackaged mixes requiring only the addition of water.

E. Nonshrink epoxy grouts shall be delivered as premeasured, prepackaged, three component systems requiring only blending as directed by the manufacturer.

1.07 DEFINITIONS

A. Nonshrink Grout: A commercially manufactured product that does not shrink in either the plastic or hardened state, is dimensionally stable in the hardened state and bonds to a clean base plate.

PART 2 - PRODUCTS

2.01 GENERAL

A. The use of a manufacturer's name and product or catalog number is for the purpose of establishing the standard of quality required.

B. Like materials shall be the products of one manufacturer or supplier in order to provide standardization of appearance.

2.02 MATERIALS

A. Nonshrink Cementitious Grout (Nonshrink Grout)

1. Nonshrink grouts shall meet or exceed the requirements of ASTM C1107 Grades B or C and CRD-C 621. Grouts shall be Portland cement based, contain a pre-proportioned blend of selected aggregates and shrinkage compensating agents and shall require only the addition of water. Nonshrink grouts shall not contain expansive cement or metallic particles. The grouts shall exhibit no shrinkage when tested in conformity with ASTM C827.

   a. General purpose nonshrink grout shall conform to the standards stated above and shall be SikaGrout 212 by Sika Corp.; Set Grout by Master Builders, Inc.; Gilco Construction Grout by Gifford Hill & Co.; Euco NS by The Euclid Chemical Co.; NBEC Grout by U. S. Grout Corp. or approved equivalent.

   b. Flowable (Precision) nonshrink grout shall conform to the standards stated above and shall be Masterflow 928 by Master Builders, Inc.; Hi-Flow Grout by the Euclid Chemical Co.; SikaGrout 212 by Sika Corp.; Supreme Grout by Gifford Hill & Co.; Five Star Grout by U. S. Grout Corp. or approved equivalent.

B. Nonshrink Epoxy Grout

1. Nonshrink epoxy-based grout shall be a pre-proportioned, three-component, 100 percent solids system consisting of epoxy resin, hardener, and blended aggregate. It shall have a compressive strength of 14,000 psi in 7 Calendar Days when tested in conformity with ASTM D695 and have a maximum thermal expansion of 30 x 10^{-6}

when tested in conformity with ASTM C531. The grout shall be Ceilcote 648 CP by Master Builders, Inc.; Five Star Epoxy Grout by U.S. Grout Corp.; Sikadur 42 Grout-Pak by Sika Corp.; High Strength Epoxy Grout by the Euclid Chemical Co. or approved equivalent.

PART 3 - EXECUTION

3.01 PREPARATION

A. Grout shall be placed over cured concrete which has attained its full design strength unless otherwise approved by the Engineer in writing.

B. Concrete surfaces to receive grout shall be clean and sound; free of ice, frost, dirt, grease, oil, curing compounds, laitance and paints and free of all loose material or foreign matter which may affect the bond or performance of the grout.

C. Roughen concrete surfaces by chipping, sandblasting, or other mechanical means to ensure bond of the grout to the concrete. Remove loose or broken concrete. Irregular voids or projecting coarse aggregate need not be removed if they are sound, free of laitance and firmly embedded into the parent concrete.

   1. Air compressors used to clean surfaces in contact with grout shall be the oilless type or equipped with an oil trap in the air line to prevent oil from being blown onto the surface.

D. Remove all loose rust, oil or other deleterious substances from metal embedments or bottom of baseplates prior to the installation of the grout.

E. Concrete surfaces shall be washed clean and then kept moist for at least 24 hours prior to the placement of cementitious or cement grout. Saturation may be achieved by covering the concrete with saturated burlap bags, use of a soaker hose, flooding the surface, or other method acceptable to the Engineer. Upon completion of the 24 hour period, visible water shall be removed from the surface prior to grouting. The use of an adhesive bonding agent in lieu of surface saturation shall only be used when approved by the Engineer for each specific location of grout installation.

F. Epoxy-based grouts do not require the saturation of the concrete substrate. Surfaces in contact with epoxy grout shall be completely dry before grouting.

G. Construct grout forms or other leakproof containment as required. Forms shall be lined or coated with release agents recommended by the grout manufacturer. Forms shall be of adequate strength, securely anchored in place and shored to resist the forces imposed by the grout and its placement.

   1. Forms for epoxy grout shall be designed to allow the formation of a hydraulic head and shall have chamfer strips built into forms.

H. Level and align the structural or equipment bearing plates in accordance with the structural requirements and the recommendations of the equipment manufacturer.

I. Equipment shall be supported during alignment and installation of grout by shims, wedges, blocks or other approved means. The shims, wedges and blocking devices shall be prevented from bonding to the grout by appropriate bond breaking coatings and removed after grouting unless otherwise approved by the Engineer.

3.02 INSTALLATION - GENERAL

A. Mix, apply and cure products in strict compliance with the manufacturer's recommendations and this Section.

B. Have sufficient manpower and equipment available for rapid and continuous mixing and placing. Keep all necessary tools and materials ready and close at hand.

C. Maintain temperatures of the foundation plate, supporting concrete, and grout between 40 and 90 degrees F during grouting and for at least 24 hours thereafter or as recommended by the grout manufacturer, whichever is longer. Take precautions to minimize differential heating or cooling of baseplates and grout during the curing period.

D. Take special precautions for hot weather or cold weather grouting as recommended by the manufacturer when ambient temperatures and/or the temperature of the materials in contact with grout are outside of the 60 and 90 degrees F range.

E. Install grout in a manner which will preserve the isolation between the elements on either side of the joint where grout is placed in the vicinity of a control joint.

F. Reflect all existing underlying expansion, control and construction joints through the grout.

3.03 INSTALLATION - NONSHRINK GROUTS

A. Mix in accordance with manufacturer's recommendations. Do not add cement, sand, pea gravel or admixtures without prior written approval by the Engineer.

B. Mix in a mortar mixer (with moving blades). Add pre-measured amount of water for mixing, followed by the grout. Begin with the minimum amount of water recommended by the manufacturer and then add the minimum additional water required to obtain workability. Do not exceed the manufacturer's maximum recommended water content.

C. Placements greater than 3 inches in depth shall include the addition of clean, washed pea gravel to the grout mix when approved by the manufacturer and Engineer. Comply with the manufacturer's recommendations for the size and amount of aggregate to be added.

D. Place grout into the designated areas in a manner which will avoid segregation or entrapment of air. Do not vibrate grout to release air or to consolidate the material.

Placement should proceed in a manner which will ensure the filling of all spaces and provide full contact between the grout and adjoining surfaces. Provide grout holes as necessary.

E. Place grout rapidly and continuously to avoid cold joints. Do not place cement grouts in layers. Do not add additional water to the mix (retemper) after initial stiffening.

F. Just before the grout reaches its final set, cut back the grout to the substrate at a 45 degree angle from the lower edge of bearing plate unless otherwise approved by the Engineer. Finish this surface with a wood float finish.

G. Begin curing immediately after form removal, cutback, and finishing. Keep grout moist and within its recommended placement temperature range for at least 24 hours after placement or longer if recommended by the manufacturer. Saturate the grout surface by use of wet burlap, soaker hoses, ponding or other approved means. Provide sunshades as necessary. If drying winds inhibit the ability of a given curing method to keep grout moist, erect wind breaks until wind is no longer a problem or curing is finished.

3.04 INSTALLATION - NONSHRINK EPOXY GROUTS

A. Mix in accordance with the procedures recommended by the manufacturer. Do not vary the ratio of components or add solvent to change the consistency of the grout mix. Do not overmix. Mix full batches only to maintain proper proportions of resin, hardener and aggregate.

B. Monitor ambient weather conditions and contact the grout manufacturer for special placement procedures to be used for temperatures below 60 or above 90 degrees F.

C. Place grout into the designated areas in a manner which will avoid trapping air. Placement methods shall ensure the filling of all spaces and provide full contact between the grout and adjoining surfaces. Provide grout holes as necessary.

D. Minimize "shoulder" length (extension of grout horizontally beyond base plate). In no case shall the shoulder length of the grout be greater than the grout thickness.

E. Finish grout by puddling to cover all aggregate and provide a smooth finish. Break bubbles and smooth the top surface of the grout in conformity with the manufacturer's recommendations.

F. Epoxy grouts are self curing and do not require the application of water. Maintain the formed grout within its recommended placement temperature range for at least 24 hours after placing, or longer if recommended by the manufacturer.

3.05 SCHEDULE

A. The following list indicates where the particular types of grout are to be used:

1. General purpose nonshrink grout: Use at all locations where non shrink grout is called for on the Drawings except for base plates greater in area than 3-ft. wide by 3-ft. long and except for the setting of anchor rods, anchor bolts or reinforcing steel in concrete.

2. Flowable nonshrink grout: Use under all base plates greater in area than 3-ft. by 3-ft. Use at all locations indicated to receive flowable nonshrink grout by the Drawings. The Contractor, at his/her option and convenience, may also substitute flowable nonshrink grout for general purpose nonshrink grout.

3. Nonshrink epoxy grout: Use for the setting of anchor rods, anchor bolts and reinforcing steel in concrete and for all locations specifically indicated to receive epoxy grout.

END OF SECTION

This page intentionally left blank.

TECHNICAL PROVISIONS

SECTION 03740

MODIFICATIONS AND REPAIRS TO CONCRETE

PART 1 - GENERAL

1.01 SCOPE OF WORK

A. Furnish all labor, materials, equipment and incidentals required and cut, remove, repair or otherwise modify parts of existing concrete structures or appurtenances as shown on the Drawings and as specified herein. Work under this Section shall also include bonding new concrete to existing concrete.

1.02 RELATED WORK

A. Concrete Formwork is included in Section 03100.

B. Concrete Reinforcement is included in Section 03200.

C. Concrete Joints and Accessories are included in Section 03250.

D. Cast-in-Place Concrete is included in Section 03300.

E. Grout is included in Section 03600.

F. Metal Fabrications are included in Section 05500.

1.03 SUBMITTALS

A. Submit to the Engineer, in accordance with Section 01300, Shop Drawings and product data showing materials of construction and details of installation for:

1. Manufacturer's technical literature on all product brands proposed for use, to the Engineer for review. The submittal shall include the manufacturer's installation and/or application instructions.

2. When substitutions for acceptable brands of materials specified herein are proposed, submit brochures and technical data of the proposed substitutions to the Engineer for approval before delivery to the Site.

1.04 REFERENCE STANDARDS

A. American Society for Testing and Materials (ASTM)

1. ASTM C881 - Standard Specification for Epoxy-Resin-Base Bonding Systems for Concrete.

2. ASTM C882 - Standard Test Method for Bond Strength of Epoxy-Resin Systems Used with Concrete by Slant Sheer.

3. ASTM C883 - Standard Test Method for Effective Shrinkage of Epoxy-Resin Systems Used with Concrete.

4. ASTM D570 - Standard Test Method for Water Absorption of Plastics.

5. ASTM D638 - Standard Test Method for Tensile Properties of Plastics.

6. ASTM D695 - Standard Test Method for Compressive Properties of Rigid Plastics.

7. ASTM D732 - Standard Test Method for Shear Strength of Plastics by Punch Tool.

8. ASTM D790 - Standard Test Methods for Flexural Properties of Unreinforced and Reinforced Plastics and Electrical Insulating Materials.

1.05 QUALITY ASSURANCE

A. No existing structure or concrete shall be shifted, cut, removed, or otherwise altered until authorization is given by the Owner.

B. When removing materials or portions of existing structures and when making openings in existing structures erect all necessary barriers, shoring and bracing and other protective devices to prevent damage to the structures beyond the limits necessary for the new work, protect personnel, control dust and exercise care to prevent damage to the structures or contents by falling or flying debris. Unless otherwise permitted or specified, line drilling will be required in cutting existing concrete.

C. Manufacturer Qualifications: The manufacturer of the specified products shall have a minimum of 5 years experience in the manufacture of such products and shall have an ongoing program of training, certifying and technically supporting the Contractor's personnel.

1.06 DELIVERY, STORAGE AND HANDLING

A. Deliver the specified products in original, unopened containers with the manufacturer's name, labels, product identification and batch numbers.

B. Store and condition the specified product as recommended by the manufacturer.

PART 2 - PRODUCTS

2.01 MATERIALS

A. General

1. Materials shall comply with this Section and any state or local regulations.

B. Epoxy Bonding Agent

1. General

a. The epoxy bonding agent shall be a two-component, solvent-free, asbestos-free moisture insensitive epoxy resin material used to bond plastic concrete to hardened concrete complying with the requirements of ASTM C881, Type II and the additional requirements specified herein.

2. Material

a. Properties of the cured material:

1) Compressive Strength (ASTM D695): 8,500 psi minimum at 28 Calendar Days.

2) Tensile Strength (ASTM D638): 4,000 psi minimum at 14 Calendar Days.

3) Flexural Strength (ASTM D790 - Modulus of Rupture): 6,300 psi minimum at 14 Calendar Days.

4) Shear Strength (ASTM D732): 5,000 psi minimum at 14 Calendar Days.

5) Water Absorption (ASTM D570 - 2 hour boil): One percent maximum at 14 Calendar Days.

6) Bond Strength (ASTM C882) Hardened to Plastic: 1,500 psi minimum at 14 Calendar Days moist cure.

7) Effective Shrinkage (ASTM C883): Passes Test.

8) Color: Gray.

3. Approved products include: Sikadur 32 Hi-Mod by Sika Corporation of Lyndhurst, NJ; Concresive Liquid (LPL) by Master Builders/ChemRex, Inc. Shakopee, MN or approved equivalent.

C. Epoxy Paste

1. General

a. Epoxy Paste shall be a two-component, solvent-free, asbestos free, moisture insensitive epoxy resin material used to bond dissimilar materials to concrete such as setting railing posts, dowels, anchor bolts and all-threads into hardened concrete and shall comply with the requirements of ASTM C881, Type I, Grade 3 and the additional requirements specified herein. It may also be used to patch existing surfaces where the glue line is 1/8-inch or less.

2. Material

a. Properties of the cured material:

1) Compressive Properties (ASTM D695): 10,000 psi minimum at 28 Calendar Days.

2) Tensile Strength (ASTM D638): 3,000 psi minimum at 14 Calendar Days. Elongation at Break - 0.3 percent minimum.

3) Flexural Strength (ASTM D790 - Modulus of Rupture): 3,700 psi minimum at 14 Calendar Days.

4) Shear Strength (ASTM D732): 2,800 psi minimum at 14 Calendar Days.

5) Water Absorption (ASTM D570): 1.0 percent maximum at 7 Calendar Days.

6) Bond Strength (ASTM C882): 2,000 psi at 14 Calendar Days moist cure.

7) Color: Concrete grey.

3. Approved products include:

a. Overhead or vertical applications: Sikadur Hi-mod 31 Gel by Sika Corporation, Lyndhurst, NJ; Concresive 1420 by Master Builders/ChemRex, Inc., Shakopee, MN or approved equivalent.

D. Non-Shrink Precision Cement Grout, Non-Shrink Cement Grout and Non-Shrink Epoxy Grout are included in Section 03600.

E. Crack Repair Epoxy Adhesive

1. General

   a. Crack Repair Epoxy Adhesive shall be a two-component, solvent-free, moisture insensitive epoxy resin material suitable for crack grouting by injection or gravity feed. It shall be formulated for the specific size of opening or crack being injected.

2. Material

   a. Properties of the cured material

      1) Compressive Properties (ASTM D695): 10,000 psi minimum at 28 Calendar Days.

      2) Tensile Strength (ASTM D638): 5,300 psi minimum at 14 Calendar Days. Elongation at Break - 2 to 5 percent.

      3) Flexural Strength (ASTM D790 - Modulus of Rupture): 12,000 psi minimum at 14 Calendar Days (gravity); 4,600 psi minimum at 14 Calendar Days (injection)

      4) Shear Strength (ASTM D732): 3,700 psi minimum at 14 Calendar Days.

      5) Water Absorption (ASTM D570 - 2 hour boil): 1.5 percent maximum at 7 Calendar Days.

      6) Bond Strength (ASTM C882): 2,400 psi at 2 Calendar Days dry; 2,000 psi at 14 Calendar Days dry plus 12 Calendar Days moist.

      7) Effective Shrinkage (ASTM C883): Passes Test.

3. Approved products include:

   a. For standard applications: Sikadur 35 Hi-Mod LV by Sika Corporation, Lyndhurst, NJ; Master Builders Inc., Cleveland, OH - Concressive 1380 or approved equivalent.

   b. For very thin applications: Sika Corporation, Lyndhurst, NJ - Sikadur Hi-Mod LV; Master Builders Inc., Cleveland, OH - Concressive 1468 or approved equivalent.

PART 3 - EXECUTION

3.01 GENERAL

A. Cut, repair, reuse, demolish, excavate or otherwise modify parts of the existing structures or appurtenances, as indicated on the Drawings, specified herein, or necessary to permit completion of the Work. Finishes, joints, reinforcements, sealants, etc. are specified in respective Sections. All work shall comply with other requirements of this of Section and as shown on the Drawings.

B. All commercial products specified in this Section shall be stored, mixed and applied in strict compliance with the manufacturer's recommendations.

C. In all cases where concrete is repaired in the vicinity of an expansion joint or control joint the repairs shall be made to preserve the isolation between components on either side of the joint.

D. When drilling holes for dowels/bolts at new or existing concrete, drilling shall stop if rebar is encountered. The hole at which drilling is stopped because of interference of rebar shall be repaired using epoxy grout. As approved by the Engineer, the hole location shall be relocated to avoid rebar. Rebar shall not be cut without prior approval by the Engineer. Where possible, rebar locations shall be identified prior to drilling using "rebar locators" so that drilled hole locations may be adjusted to avoid rebar interference.

3.02 CONCRETE REMOVAL

A. Concrete designated to be removed to specific limits as shown on the Drawings or directed by the Engineer, shall be done by line drilling at limits followed by chipping or jack-hammering as appropriate in areas where concrete is to be taken out. Remove concrete in such a manner that surrounding concrete or existing reinforcing to be left in place and existing in place equipment is not damaged. Saw cutting at limits of concrete to be removed shall only be done if indicated on the Drawings, or after obtaining written approval from the Engineer.

B. Where existing reinforcing is exposed due to saw cutting/core drilling and no new material is to be placed on the sawcut surface, a coating or surface treatment of epoxy paste shall be applied to the entire cut surface to a thickness of 1/4-inch.

C. In all cases where the joint between new concrete or grout and existing concrete will be exposed in the finished work, except as otherwise shown or specified, the edge of concrete removal shall be a 1-inch deep saw cut on each exposed surface of the existing concrete.

D. Concrete specified to be left in place which is damaged shall be repaired by approved means to the satisfaction of the Engineer.

E. The Owner may from time to time direct the Contractor to make additional repairs to existing concrete. These repairs shall be made as specified or by such other methods as may be appropriate.

3.03 CONNECTION SURFACE PREPARATION

A. Connection surfaces shall be prepared as specified below for concrete areas requiring patching, repairs or modifications as shown on the Drawings, specified herein, or as directed by the Owner.

B. Remove all deteriorated materials, dirt, oil, grease, and all other bond inhibiting materials from the surface by dry mechanical means (e.g., sandblasting, grinding) as approved by the Engineer. Be sure the areas are not less than 1/4-inch depth. Irregular voids or surface stones need not be removed if they are sound, free of laitance, and firmly embedded into parent concrete, subject to the Owner's final inspection.

C. If reinforcing steel is exposed, it must be mechanically cleaned to remove all contaminants, rust, etc., as approved by the Owner. If half of the diameter of the reinforcing steel is exposed, chip out behind the steel. The distance chipped behind the steel shall be a minimum of 1/2-inch. Reinforcing to be saved shall not be damaged during the demolition operation.

D. Reinforcing from existing demolished concrete which is shown to be incorporated in new concrete shall be cleaned by mechanical means to remove all loose material and products of corrosion before proceeding with the repair. It shall be cut, bent or lapped to new reinforcing as shown on the Drawings and provided with 1-inch minimum cover all around.

E. The following are specific concrete surface preparation "methods" to be used where called for on the Drawings, specified herein or as directed by the Owner.

1. Method A: After the existing concrete surface at connection has been roughened and cleaned, thoroughly moisten the existing surface with water. Brush on a 1/16-inch layer of cement and water mixed to the consistency of a heavy paste. Immediately after application of cement paste, place new concrete or grout mixture as detailed on the Drawings.

2. Method B: After the existing concrete surface has been roughened and cleaned, apply epoxy bonding agent at connection surface. The field preparation and application of the epoxy bonding agent shall comply strictly with the manufacturer's recommendations. Place new concrete or grout mixture to limits shown on the Drawings within time constraints recommended by the manufacturer to ensure bond.

3. Method C: Drill a hole 1/4-inch larger than the diameter of the dowel. The hole shall be blown clear of loose particles and dust just prior to installing epoxy. The drilled hole shall first be filled with epoxy paste and then dowels/bolts shall be buttered with paste and inserted by tapping. Unless otherwise shown on the Drawings, deformed

bars shall be drilled and set to a depth of ten bar diameters and smooth bars shall be drilled and set to a depth of fifteen bar diameters. If not noted on the Drawings, the Engineer will provide details regarding the size and spacing of dowels.

4. Method D: Combination of Method B and C.

3.04 GROUTING

A. Grouting shall be as specified in Section 03600.

3.05 CRACK REPAIR

A. Cracks on horizontal surfaces shall be repaired by gravity feeding crack sealant into cracks per manufacturer's recommendations.

B. Cracks on vertical and overhead surfaces shall be repaired by pressure injecting crack sealant through valves sealed to surface with crack repair epoxy adhesive per manufacturer's recommendations.

END OF SECTION

TECHNICAL PROVISIONS

SECTION 05120

STRUCTURAL STEEL

PART 1 - GENERAL

1.01 SCOPE OF WORK

A. Furnish all labor, materials and incidentals required and install structural steel including bearing plates, columns, trusses, beams and miscellaneous shapes and plates required to erect the structures as shown on the Drawings and as specified herein.

B. Furnish all anchor bolts with templates to be installed under Division 3. Furnish and install nuts and washers for anchor bolts.

1.02 RELATED WORK

A. Grouting of baseplates is included in Section 03600.

B. Metal Fabrication is included in Section 05500.

C. Field painting, except as specified herein, is included in Section 09920.

1.03 SUBMITTALS

A. Submit to the Engineer, in accordance with Section 01300, erection drawings, detailed shop drawings, schedules and data for all structural steel. Approval will be for strength and general conformity to the Drawings and shall not relieve the Contractor of responsibility for proper fit of members, of connections not detailed on the Drawings, or for supplying all material required by the Contract Documents. Mark numbers painted on the shop assembled pieces of steel shall be the same mark numbers used on the detailed shop and erection drawings.

B. Certified mill test reports of the structural steel and the bolting materials.

C. Certifications that welders are qualified in accordance with AWS D1.1 for each process, position, and joint configuration, on the shop and field welding procedures to be used.

D. Written Welding Procedure Specifications (WPS's) in accordance with AWS D1.1 for each different welded joint proposed for use whether prequalified or qualified by testing.

E. Electrode manufacturer data.

1.04 REFERENCE STANDARDS

A. American Institute of Steel Construction (AISC)

1. AISC S302 - Code of Standard Practice for Steel Buildings and Bridges.

2. AISC S326 - Specification for the Design, Fabrication and Erection of Structural Steel for Buildings.

3. AISC S335 - Specification for Structural Steel Buildings Allowable Stress Design and Plastic Design with Commentary.

4. AISC M011 - Manual of Steel Construction for Shop and Field Welding.

5. AISC M016 - Manual of Steel Construction Allowable Stress Design.

B. American Society for Testing and Materials (ASTM)

1. ASTM A36 - Standard Specification for Structural Steel Shapes.

2. ASTM A53 - Standard Specification for Pipe, Steel, Black and Hot-Dipped, Zinc-coated, Welded and Seamless.

3. ASTM A123 - Standard Specification for Zinc (Hot-Dipped Galvanized) Coatings on Iron and Steel Products.

4. ASTM A153 - Standard Specification for Zinc Coating (Hot-Dip) on Iron and Steel Hardware.

5. ASTM A307 - Standard Specification for Carbon Steel Bolts and Studs, 60,000 psi Tensile Strength.

6. ASTM A325 - Standard Specification for Structural Bolts, Steel, Heat Treated, 120/105 ksi Minimum Tensile Strength.

7. ASTM A490 – Standard Specification for Structural Bolts, Alloy Steel, Heat Treated, 150 ksi Minimum Tensile Strength.

8. ASTM A500 - Standard Specification for Cold-Formed Welded and Seamless Carbon Steel Structural Tubing in Rounds and Shapes.

9. ASTM B695 – Standard Specification for Coatings of Zinc Mechanically Deposited on Iron and Steel.

C. American Welding Society (AWS)

1. AWS A5.1 - Specification for Carbon Steel Electrodes for Shielded Metal Arc Welding.

2. AWS D1.1 - Structural Welding Code Steel.

D. Research Council on Structural Connections of the Engineering Foundation (RCSCEF)

1. Specification for Structural Joints using ASTM A325 or ASTM A490 Bolts.

1.05 QUALITY ASSURANCE

A. Structural steel shall be in accordance with the AISC Standard for Structural Steel Buildings - Allowable Stress Design and Plastic Design and the Code of Standard Practice for Steel Buildings and Bridges, unless otherwise specified herein.

B. Welding shall be done by certified welders and shall be in accordance with AWS D1.1 unless otherwise specified herein or in the AISC Standard.

1. WPS's for each joint type shall indicate proper AWS qualification and be available where welding is performed.

1.06 DELIVERY, STORAGE, AND HANDLING

A. Deliver materials promptly so as to cause no delay with other parts of the Work.

B. Store materials on skids and not on the ground. Pile and block materials so that they will not become bent or otherwise damaged. Do not allow metals to stain concrete.

C. Handle materials with cranes or derricks as far as practicable. Do not dump steel off cars or trucks nor handle in any other manner likely to cause damage.

PART 2 - PRODUCTS

2.01 MATERIALS

A. Structural shapes, plates, rods and bars unless otherwise noted: ASTM A36.

B. Structural tube: ASTM A500, Grade B.

C. Structural pipe: ASTM A53, Type S, Grade B.

D. Welding electrodes: AWS A5.1, E70XX.

E. High strength steel bolts, nuts and washers: ASTM A325X unless noted otherwise. When galvanized material is to be connected, use ASTM A325, mechanically galvanized to ASTM B695, Class 50, Type II.

F. Anchor bolts: ASTM A307.

G. Shop primer: As specified in Section 09910.

H. Galvanizing: Zinc with 0.05 percent (minimum) nickel added.

I. Galvanized surface primer: 95 percent zinc dust, organic vehicle primer.

2.02 FABRICATION

A. Fabrication shall be in accordance with AISC S326 and indicated requirements. All structural steel welding in off-site fabrication shops may be continuously inspected by the Owner's Materials Inspector. The continuous inspection may be waived if the work is done in a shop certified by the Council of American Building Officials (CABO) or listed by the International Conference of Building Officials (ICBO) Evaluation Services, Inc. This shall be at no extra cost to the Owner.

B. Match-mark materials for field assembly. Ream unmatched holes in shop assembly of field connections. Reject and replace with new pieces any piece weakened by reaming to a point where the strength of the joint is impaired.

C. Welding of parts shall be done only where shown in the Contract Documents and by welders and welding operators qualified for the procedures used.

2.03 SURFACE PREPARATION AND SHOP COATINGS

A. Prepare and shop prime paint non-galvanized members as specified in Section 09910. Do not prime paint faying surfaces of slip critical connections.

B. Galvanize members and their attachments exposed in whole or part to the weather or where frequent water contact is likely. Galvanize other members as indicated on the Drawings. Galvanizing shall be done after fabrication and in accordance with ASTM A123. Hardware galvanizing shall be in accordance with ASTM A153 and Section 09910.

PART 3 - EXECUTION

3.01 INSTALLATION

A. General:

1. Structural assemblies and shop and field welding shall meet the requirements of AISC M011 and AISC S326.

2. Measurements and dimensions shall be verified at the work site.

3. Bolt holes shall be 1/16 inch larger than the nominal size of bolts. Where thick metals are indicated, holes shall be sub-punched and drilled or reamed.

4. Dissimilar metals shall be protected from galvanic corrosion by means of pressure tapes, coatings or isolators.

5. Bolts shall not be permitted to drift and holes shall not be enlarged to correct misalignment. In the event of mismatching of holes, new materials shall be provided.

6. Structural steel completely encased in concrete shall not be galvanized or painted and shall have a clean surface for bonding to concrete.

7. Damaged structural steel shall be replaced. Use of salvaged, reprocessed, or scrap materials shall not be permitted.

8. Furnish and install temporary bracing to provide stability during erection and to prevent distortion or damage to the framing due to wind, seismic, or erection forces. Remove temporary bracing when erection is complete.

9. No field cutting or modification for any structural steel member shall be allowed without prior written approval from the Engineer.

B. Bolted and Welded Connections:

1. Where bolted connections are indicated, they shall comply with AISC Specifications for Framed Beam Connections for bearing type connections. The threaded portion of bolts shall not occur at shear planes.

2. Make all steel to steel connections by high strength bolting except where field welding is shown or specified. Provide not less than two 3/4-inch bolts per connection and use not less than 1/4-inch thick clip angles or plates.

3. Tighten bolted connections designated as bearing-type connections to the snug tight condition. Tighten all other bolted connections to full pretension by turn-of-nut or calibrated wrench tightening.
4. Each bolting crew and welder shall be assigned an identification mark. This mark shall be made at each completed connection with a paint stick.

5. Field welding shall be done only where shown or specified and only by welders qualified for the procedures used. Weld only in accordance with approved WPS's which are to be available to welders and inspectors during the production process. No welding shall be done when surfaces are wet, exposed to rain or wind, or when welders are exposed to inclement conditions that will hamper good work.
6. Welding shall comply with AWS Code for Arc Welding in Building Construction, Section 4, Workmanship. Electrodes shall be matching per AWS.

3.02 CORROSION PROTECTION

A. Unless otherwise indicated, all structural steel including that used in the fabrication of process equipment shall be surface-prepared and coated in accordance with Division 9 and shall include the following operations:

1. Exterior and interior edges of flame-cut pieces shall be ground smooth.

2. Sharp edges and punched holes shall be ground smooth.

3. Uneven or rough welds shall be ground smooth.

B. After erection, prime paint abrasions, field welds and unprimed surfaces using shop primer except surfaces designated to be unpainted or surfaces in contact with concrete.

C. After erection, prime paint abrasions, field welds, on galvanized surfaces with galvanized surface primer.

D. After installation, damaged surfaces of shop-primed structural steel shall be cleaned and touched-up with same material used for shop coat.

3.03 FIELD TESTING

A. Field inspection services required will be provided by the Owner.

B. Allow the Owner free access to the Work. Notify the Owner in writing 10 Working Days in advance of high strength bolting or field welding operations.

C. High strength bolting will be inspected visually. All high strength bolts shall have the turned portion marked with reference to the steel being connected after the nut has been made snug and prior to final tightening. Retighten rejected bolts or remove and provide new bolts. In cases of disputed bolt installations, the bolts in question shall be checked using a calibrated wrench certified by an independent testing laboratory approved by the Owner. The certification shall be at the Contractor's expense.

D. Field welding will be inspected visually and by non-destructive testing by AWS-certified welding inspectors provided by the Owner at the Owner's option. Comply with all requests of inspectors to correct deficiencies.

E. The fact that steel work has been accepted at the shop and mill will not prevent its final rejection at the Site, before or after erection, if it is found to be defective.

F. Remove rejected steel work from the Site within 10 Working Days after notification of rejection.

3.04 PAINTING

A. All structural steel, connections, accessories, anchors and bolts shall be painted as per Sections 09910 and 09920.

B. Colors shall be as approved by the Owner.

END OF SECTION

This page intentionally left blank.

TECHNICAL PROVISIONS

SECTION 05500

METAL FABRICATIONS

PART 1 - GENERAL

1.01 SCOPE OF WORK

A. Furnish all labor, materials, equipment and incidentals required to complete and install fabricated metal items. Furnish all supplementary items necessary for their proper installation.

B. Check Drawings carefully and furnish all anchors, sleeves, bolts, brackets, clips, inserts, angles, plates and other miscellaneous metal not distinctly specified under other sections but necessary to complete the Work.

1.02 RELATED WORK

A. Surface Preparation and Shop Painting and Coating are included in Section 09910.

B. Field Painting and Protective Coating are included in Section 09920.

1.03 REFERENCE STANDARDS

A. American Association of State Highway and Transportation Officials (AASHTO).

1. Standard Specification for Highway Bridges

B. American Institute of Steel Construction (AISC)

1. Steel Construction Manual, Ninth Edition

2. Manual of Steel Construction - Load & Resistance Factor Design, Second Edition

C. American National Standards Institute (ANSI)

1. ANSI B18.2.1 - Square and Hex Bolts and Screws, Inch Series

D. American Society for Testing & Materials (ASTM)

1. ASTM A36 - Standard Specification for Structural Steel

2. ASTM A48 - Specification for Gray Iron Castings

3. ASTM A53 - Standard Specification for Pipe, Steel, Black and Hot-Dipped, Zinc-Coated Welded and Seamless

4. ASTM A108 - Standard Specification for Steel Bars, Carbon, Cold Finished, Standard Quality

5. ASTM A123 - Standard Specification for Zinc (Hot-Dip Galvanized) Coatings on Iron and Steel Products

6. ASTM A125 - Specification for Steel Springs, Helical, Heat Treated

7. ASTM A153 - Standard Specification for Zinc Coating (Hot-Dip) on Iron and Steel Hardware

8. ASTM A167 - Standard Specification for Stainless and Heat-Resisting Chromium-Nickel Steel Plate, Sheet and Strip

9. ASTM A193 - Standard Specification for Alloy-Steel and Stainless Steel Bolting Materials for High-Temperature Services

10. ASTM A194 - Standard Specification for Carbon and Alloy Steel Nuts for High Pressure or High Temperature Service, or Both

11. ASTM A276 - Standard Specification for Stainless and Heat-Resisting Steel Bars and Shapes

12. ASTM A283 - Standard Specification for Low and Intermediate Tensile Strength Carbon Steel Plates

13. ASTM A307 - Standard Specification for Carbon Steel Bolts and Studs, 60,000 psi Tensile Strength

14. ASTM A312 - Standard Specification for Seamless and Welded Austenitic Stainless Steel Pipe

15. ASTM A320 - Specification for Alloy-Steel Bolting Materials for Low-Temperature Service

16. ASTM A325 – Standard Specification for Structural Bolts, Steel, Heat Treated, 120/105 ksi Minimum Tensile Strength

17. ASTM A366 – Standard Specification for Steel, Carbon, Cold-Rolled Sheet, Commercial Quality

18. ASTM A563 – Standard Specification for Carbon and Alloy Steel Nuts

19. ASTM F436 – Standard Specification for Hardened Steel Washers

20. ASTM F594 – Standard Specification for Stainless Steel Nuts

21. ASTM A500 - Standard Specification for Cold-Formed Welded and Seamless Carbon Steel Structural Tubing in Rounds and Shapes

22. ASTM A563 - Standard Specification for Carbon and Alloy Steel Nuts

23. ASTM A569 - Specification for Steel, Carbon, (0.15 Maximum Percent) Hot Rolled, Sheet and Strip, Commercial Quality

24. ASTM A575 - Specification for Steel Bars, Carbon, Merchant Quality, M-Grades

25. ASTM A1008 - Standard Specification for Steel, Sheet, Cold-Rolled, Carbon, Structural, High-Strength Low Alloy and High-Strength Low-Alloy with Improved Formability

26. ASTM B98 - Specification for Copper-Silicon Alloy Rod, Bar, and Shapes

27. ASTM B210 - Specification for Aluminum and Aluminum-Alloy Drawn Seamless Tubes

28. ASTM B221 - Specification for Aluminum and Aluminum-Alloy Extruded Bars, Rods, Wire, Shapes and Tubes

29. ASTM B438 - Specification for Sintered Bronze Bearings (Oil-Impregnated)

30. ASTM B695 - Standard Specification for Coatings of Zinc Mechanically Deposited on Iron and Steel

E. American Welding Society (AWS)

1. AWS D1.1 Structural Welding Code - Steel

2. AWS D1.2 Structural Welding Code - Aluminum

3. AWS A2.0 Standard Welding Symbols

F. Federal Specifications

1. FSSQQ-F-461 C (1) - Floor Plate, Steel, Rolled

G. The Society for Protective Coatings (SSPC)

1. SSPC SP-1 - Surface Preparation Specification No.1 “Solvent Cleaning”

2. SSPC SP-2 - Surface Preparation Specification No.2 “Hand Tool Cleaning”

3. SSPC SP-3 - Surface Preparation Specification No.3 “Power Tool Cleaning”

4. SSPC SP-6 - Surface Preparation Specification No.6 “Commercial Blast Cleaning”

5. SSPC SP-10 - Surface Preparation Specification No.10 “Near-White Blast Cleaning”

1.04 SUBMITTALS

A. Prior to fabrication, submit Shop Drawings and product data in accordance with Section 01300, showing methods of assembly, anchorage and connection to other members. Indicate welded connections in accordance with AWS A2.0. Shop Drawings will be required for all items included under this Section.

B. Submit samples as requested by the Owner during the course of construction.

1.05 QUALITY ASSURANCE

A. Coordinate completely the work of this Section with the work of other Sections. Verify at the Site both the dimensions and work of other trades adjoining items of work in this Section before fabrication and installation of the items specified.

B. Furnish to the pertinent trades all items included under this section that are to be built into the work of other Sections.

C. All welding shall be performed by qualified welders and shall conform to the applicable AWS welding code. Welding of steel shall conform to AWS D1.1.

1.06 DELIVERY, STORAGE AND HANDLING

A. Deliver items to be incorporated into the work of other trades in sufficient time to be checked prior to installation.

B. Store delivered items off the ground and protected from dirt and weather.

PART 2 - PRODUCTS

2.01 STEEL FABRICATIONS

A. Materials

1. Structural steel shapes, plates, bars and rods: ASTM A36

2. Steel plates - bent or cold-formed: ASTM A283, Grade C

3. Welded and seamless rectangular steel tubing: ASTM A500, Grade B

4. Steel sheets: ASTM A366

5. Carbon steel bolts, studs, nuts and washers: ASTM A307

6. High strength bolts, studs, nuts and washers for structural steel:

   a. Elevated temperature exposures: ASTM A325-Type I

   b. General application: ASTM A325-Type I or II
      Exterior application: ASTM A325 Mechanically Galvanized per ASTM B695, Class 50, Type II

7. Welding Materials AWS D1.1

8. Shop and Touch-up Primer: SSPC Paint 15 Type I red oxide

B. Fabrication

1. See general fabrication requirements in Paragraph 2.04.

2. Fabricate miscellaneous steel in accordance with the Drawings. Fabrications include beams, angles, support brackets, anchor bolts and any other miscellaneous steel called for on the Drawings and not otherwise specified.

3. Thoroughly clean steel fabrications of all loose mill scale, rust, grease or oil, moisture, dirt, or other foreign matter and finish in compliance with Paragraph 2.01.C.

C. Finishes

1. Shop priming and field coating shall be as per Division 9.

2.02 STAINLESS STEEL FABRICATIONS

A. Materials

1. Plates, sheets and structural shapes:

   - exterior, submerged or industrial use ASTM A167, Type 316
   - interior and architectural use ASTM A167, Type 304

2. Pipes: ASTM A312

3. Bolts, nuts and washers: ASTM A276, Type 316 or Type 304

B. Fabrication

1. See general fabrication requirements in Paragraph 2.04.

2.03 ANCHORS, BOLTS, AND FASTENING DEVICES

A. Furnish anchors, bolts, fasteners, etc., as necessary for installation of the work of this Section or for securing the work of other Sections to in-place construction.

B. The bolts used to attach the various members to the anchors shall be the sizes shown or required. Attach aluminum and stainless steel to concrete by means of stainless steel machine bolts. Attach iron or steel with steel machine bolts unless otherwise specifically noted. Bolts and nuts shall be hexagon type.

C. Bolt Requirements: Bolts shall comply with the following:

1. The nuts shall be capable of developing the full strength of the bolts. Threads shall be Coarse Thread Series conforming to the requirements of the American Standard for Screw Threads. Bolts and cap screws shall have hexagon heads and nuts shall be Heavy Hexagon Series.

2. The length of all bolts shall be such that after joints are made up, each bolt shall extend through the entire nut, but in no case more than 1/2-inch beyond the nut.

D. Standard Service Bolts (Not Buried or Submerged): Except where otherwise indicated, bolts and nuts shall be steel and shall be galvanized after fabrication. Threads on galvanized bolts and nuts shall be formed with suitable taps and dies such that they retain their normal clearance after hot-dip galvanizing. Except as otherwise indicated herein, steel for bolts, anchor bolts and cap screws shall be in accordance with the requirements of ASTM A325 or threaded parts of ASTM A36. ASTM A320 and A325 bolts and nuts shall not be galvanized.

E. Flange bolts for standard service shall be ASTM A193, Grade B7 with ASTM A194 Grade 1 nuts. Flange bolts for buried or submerged service shall be ASTM A193 Grade B8N

with ASTM A194 Grade 8 nuts. Bolts and nuts shall have hexagonal dimensions in accordance with ANSI/ASME B18.2.1.

F. Anchor bolts shall comply with the following:

1. Anchor bolts shall be fabricated of materials complying with SSPWC Subsections 206-1.4.3 and 209-3.2, and as follows:

Steel bolts	ASTM A325
Fabricated steel bolts	ASTM A36
Stainless steel bolts, nuts, washers	ASTM A320, type 316

2. Anchor bolt holes in equipment support frames shall not exceed the bolt diameters by more than 25 percent, up to a maximum oversizing of 1/4-inch. Unless otherwise indicated, minimum anchor bolt diameter shall be 1/2-inch. Anchor bolts for equipment shall be 316 stainless steel and shall be provided with leveling nuts which shall be tightened against flat surfaces to not less than 10 percent of the bolt's safe tensile stress.

3. Tapered washers shall be provided where mating surface is not square with the nut.

4. Expansion, wedge, or adhesive anchors set in holes drilled in the concrete after the concrete is placed is not permitted as substitution for anchor bolts except where otherwise indicated. Upset threads shall not be acceptable.

5. ASTM A307 anchor bolts are prohibited.

G. Automatic end welded headed anchor studs shall be flux ended studs made from cold drawn steel, ASTM A108 Grades C-1010 through C-1020. Headed anchor studs shall be Nelson, H4L Headed Concrete Anchors or Nelson, S3L Shear Connectors or equal.

H. For structural purposes, unless otherwise noted, drilled-in concrete anchors shall be adhesive or expansion type anchor bolts. Drilled-in anchors shall have ICBO certified permissible values and comply with the requirements of Section 2624(d) of the California Building Code.

1. Adhesive Anchors shall be a two-part stud and cartridge resin anchoring system. Stud assemblies shall be as indicated on the Drawings and shall include all-thread anchor rod with nut and washer. Provide manufacturer's recommended drive units and adaptors for installing studs. Install anchors in full compliance with the manufacturer's recommendations. Adhesive anchors shall be Hilti HIT HY-150 systems by Hilti, Inc., Tulsa, OK; Anchor-it Fastening Systems by Adhesives Technology Corporation, Kent, WA; Epcon System by ITW Ramset/Red Head, Wooddale, IL, or equal.

2. Expansion Anchors shall be wedge type anchors of the sizes noted on the Drawings complete with nuts and washers. Unless otherwise noted, provide zinc plated carbon steel anchors. Stainless steel anchors, where required, shall be all AISI Type 316

construction. When the length or embedment of the bolt is not noted on the Drawings, provide length sufficient to place the wedge and expansion sleeve portion of the bolt at least one inch behind the reinforcing steel within the concrete.

a. Acceptable Manufacturers: Hilti: "Kwik-Bolt II," ITW Ramset/Red Head: "Trubolt Wedge," or equal.

2.04 FABRICATION - GENERAL

A. Form all miscellaneous metal work true to detail, with clean, straight, sharply defined profiles, and smooth surfaces of uniform color and texture. Provide fabrications free from defects impairing strength or durability. Drill or punch holes and smooth edges. Ease exposed edges to a small, uniform radius. Fabricate supplementary pieces necessary to complete each item though such pieces are not definitely shown or specified.

B. Supply components required for anchorage of fabrications. Steel accessories and connections to steel or cast iron shall be steel, unless otherwise specified. Threaded connections shall be made so that the threads are concealed by fitting.

C. Welded joints shall be rigid and continuously welded or spot welded as specified or shown. Dress the face of welds flush and smooth. Continuously weld and grind smooth welds that will be exposed. Exposed joints shall be close fitting and jointed where least conspicuous. Conceal fastenings where practical. Punch or drill for temporary field connections and for attachment of the work of other trades.

D. Welding of parts shall be in compliance with the latest edition of the AWS structural welding code for steel (D1.1). Welding shall be performed only by welders certified to perform the required welding in compliance with the requirements of the AWS Code.

E. Castings shall be of good quality, strong, tough, even-grained, smooth, free from scale, lumps, blisters, sand holes and defects of any kind which render them unfit for the service for which they are intended. Thoroughly clean castings. Castings may be subjected to a hammer inspection in the field by the Owner. All finished surfaces shown on the Drawings and/or specified shall be machined to a true plane surface allowing pieces to seat at all points without rocking. Make allowances in the patterns so that thicknesses specified or shown will not be reduced in obtaining finished surfaces. Castings will not be acceptable if the actual weight is less than 95 percent of the theoretical weight computed from the dimensions shown. Provide facilities for weighing castings in the presence of the Owner and show true weights, certified by the supplier.

F. Shop painting will not be required for galvanized metal, stainless steel, aluminum, copper, brass and bronze unless specifically specified.

2.05 IRON CASTINGS

A. Castings shall conform to the requirements of ASTM A48 unless otherwise indicated. Castings weighing less than 100 pounds shall be hot-dip galvanized after machining. Castings weighing greater than 100 pounds shall be galvanized where indicated.

2.06 MANHOLE, PUMP WELL AND VALVE BOX FRAMES AND COVERS

A. Except as otherwise indicated, manhole frames and covers shall comply with SSPWC Subsection 206-3 and shall be fabricated of cast iron complying with ASTM A48, Class 30 and shall be the heavy-duty type designed for H-20 highway loading, with a clear frame opening as shown on the Drawings and Standard Drawings and a minimum frame height of 4 or 6 inches. Cover pattern shall be per Standard Drawing No. 603 and shall have concealed or closed pick holes with sufficient dimensions to allow for removal without special equipment. Bearing and wedging surfaces shall be machined to ensure a tight fit and prevent rocking. The use of salvaged or scrap materials will not be permitted.

1. Manhole access structure cover shall be Alhambra Foundry Vandal Proof No. A-1251-B-6 with diamond tread or equal, modified for identification per Standard Drawing No. 603.

2. Blow-off manhole cover shall be Alhambra Foundry No. A-1310 with diamond tread or equal, modified for identification per Standard Drawing No. 603.

3. Valve box cover shall be Alhambra Foundry No. A-29610 or No. A-29608, Reliable Foundry or approved equivalent, modified for identification per Standard Drawing No. 603.

B. Locking type, nongasketed frames and covers shall be provided where indicated. Unless otherwise specified, locking covers shall have two locking wedges in the frame. Covers shall have two fingers which engage the locking wedges when the cover is positioned in the frame and turned.

PART 3 - EXECUTION

3.01 INSTALLATION - GENERAL

A. Install all items furnished except items to be embedded in concrete which shall be installed under Division 3. Items to be attached to concrete after such work is completed shall be installed in compliance with the details shown. Furnish to appropriate trades all anchors, sockets, or fastenings required for securing work to other construction.

B. Set metal work level, true to line and plumb as indicated.

C. Weld field connections and grind smooth where practicable. Clean and strip primed, steel items to bare metal where site welding is required. Conceal fastenings where practicable.

D. Secure metal to wood with lag screws, of adequate size, with appropriate washers.

E. Touch-up abrasions to finish or primer coatings immediately after erection and prior to both final coating and final acceptance.

F. Break contact between dissimilar metals as shown on the Drawings or as specified in Paragraph 3.01G.

G. Field-apply coatings for installation of metal fabrications according to the following schedule.

1. Embedded items and embedded portions of items.

2. All steel surfaces in contact with exposed concrete shall receive a protective coating of an approved heavy bitumastic troweling mastic applied in compliance with the manufacturer's instructions prior to installation.

3. Where aluminum contacts a dissimilar metal, apply a heavy brush coat of zinc-chromate primer followed by two coats of aluminum metal and masonry paint to the dissimilar metal.

4. Where aluminum contacts concrete, apply a heavy coat of zinc chromate primer to the surface of the aluminum.

5. Where aluminum contacts wood, apply two coats of aluminum metal and masonry paint to the wood.

6. Exposed items and parts shall be field painted as per Section 09920.

3.02 INSTALLATION OF ADHESIVE AND EXPANSION ANCHOR BOLTS

A. Installation of adhesive, capsule and expansion anchors shall comply with the following:

1. Anchor diameter and grade of steel shall comply with equipment supplier specifications. Anchor shall be threaded or deformed full length of embedment and shall be free of rust, scale, grease, and oils.

2. Use shall be limited to applications where exposure to fire or exposure to concrete or rod temperature above 120 degrees F is not indicated. Overhead applications (such as pipe supports) shall not be allowed.

3. Adhesive capsules of different diameters may be used to obtain proper volume for the embedment, but no more than two capsules per anchor may be used. When installing different diameter capsules in the same hole, the larger diameter capsule shall be installed first. Any extension or protrusion of the capsule from the hole is prohibited.

4. Holes shall have rough surfaces, such as can be achieved using a rotary percussion drill.

5. Holes shall be blown clean with compressed air and be free of dust or standing water prior to installation.

6. Anchor shall be left undisturbed and unloaded for full adhesive curing period.

7. Adhesive anchors used in structural applications shall be subject to special inspection.

3.03 INSTALLATION OF ADHESIVE ANCHOR BOLTS

A. Installation of adhesive and capsule anchors shall comply with the following:

1. Use shall be limited to locations where exposure to acid concentrations higher than 10 percent, to chlorine gas, or to machine or diesel oils, is not indicated.

2. All installation recommendations by the anchor system manufacturer shall be followed carefully, including maximum hole diameter.

3. Concrete temperature (not air temperature) shall be compatible with curing requirements recommended by adhesive manufacturer. Anchors shall not be placed in concrete below 25 degrees F.

3.04 INSTALLATION OF SEAT ANGLES, SUPPORTS AND GUIDES

A. Seat angles shall be set flush with the floor.

3.05 INSTALLATION OF DRILLED ANCHORS

A. Drilled anchors shall be installed in strict accordance with the manufacturer's instructions. Holes shall be roughened with a brush on a power drill, cleaned and dry. Drilled anchors shall not be installed until the concrete has reached the indicated 28-day compressive strength. Adhesive anchors shall not be loaded until the adhesive has reached its indicated strength in accordance with the manufacturer's instructions.

END OF SECTION

This page intentionally left blank.

TECHNICAL PROVISIONS

SECTION 05515

STEPS AND SAFETY EQUIPMENT

PART 1 - GENERAL

1.01 SCOPE OF WORK

A. Furnish all labor, materials, equipment and incidentals required to provide complete manhole steps and accessories as specified in the Contract Documents.

1.02 RELATED WORK

A. Grout is included in Section 03600.

B. Miscellaneous Metals are included in Section 05500.

C. Surface Preparation and Shop Painting and Coating are included in Section 09910.

D. Field Painting and Protective Coating are included in Section 09920.

1.03 SUBMITTALS

A. Prior to fabrication, submit manufacturer's Shop Drawings, in accordance with Section 01300, showing dimensions, material lists, methods of support, methods of anchoring, connections to other embers and finishes.

B. Submit samples as requested by the Owner during the course of construction.

1.04 REFERENCE STANDARDS

A. American Institute of Steel Construction (AISC)

1. Manual of Steel Construction, Eighth Edition.

2. Manual of Steel Construction - Load & Resistance Factor Design, First Edition.

B. American National Standards Institute (ANSI)

1. ANSI B18.22.1 - Lock Washers.

C. American Society for Testing & Materials (ASTM)

1. ASTM A36 - Standard Specification for Carbon Structural Steel.

2. ASTM A153 - Standard Specification for Zinc Coating (Hot-Dip) on Iron and Steel Hardware.

3. ASTM A167 - Standard Specification for Stainless and Heat-Resisting Chromium-Nickel Steel Plate, Sheet and Strip.

4. ASTM A193 - Standard Specification for Alloy-Steel and Stainless Steel Bolting Materials for High-Temperature Services.

5. ASTM A276 - Standard Specification for Stainless and Heat-Resisting Steel Bars and Shapes.

6. ASTM A283 - Standard Specification for Low and Intermediate Tensile Strength Carbon Steel Plates.

7. ASTM A307 - Standard Specification for Carbon Steel Bolts and Studs, 60,000 psi Tensile Strength.

8. ASTM A312 - Standard Specification for Seamless and Welded Austenitic Stainless Steel Pipe.

9. ASTM A325 - Standard Specification for Structural Bolts, Steel, Heat Treated, 120/105 ksi Minimum Tensile Strength.

10. ASTM A366 - Standard Specification for Steel, Carbon, Cold-Rolled Sheet, Commercial Quality.

11. ASTM A489 - Specification for Carbon Steel Eyebolts.

12. ASTM A563 - Standard Specification for Carbon and Alloy Steel Nuts.

13. ASTM A615 - Standard Specification for Deformed and Plain Carbon Steel Bars for Concrete Reinforcement

14. ASTM D4101 - Standard Specification for Polypropylene Injection and Extrusion Materials.

15. ASTM F436 - Standard Specification for Hardened Steel Washers.

16. ASTM F594 - Standard Specification for Stainless Steel Nuts.

D. American Welding Society (AWS)

1. AWS D1.1 Structural Welding Code - Steel.

2. AWS A2.0 Standard Welding Symbols.

E. Occupational Safety and Health Standards (OSHA).

1. Code of Federal Regulations, 29 CFR Part 1910.

1.05 QUALITY ASSURANCE

A. Coordinate completely the work of this Section with the work of other Sections. Verify at the Site both the dimensions and work of other trades adjoining items of work in this Section before fabrication and installation of the items specified.

B. Furnish to the pertinent trades all items included under this section that are to be built into the Work of other Sections.

C. All welding shall be performed by qualified welders and shall conform to the applicable AWS welding code. Welding of steel shall conform to AWS D1.1 and welding of aluminum shall conform to AWS D1.2.

1.06 DELIVERY, STORAGE AND HANDLING

A. Deliver items to be incorporated into the work of other trades in sufficient time to be checked prior to installation.

B. Store delivered items off the ground and protected from dirt and weather.

C. Repair or replace items which have become damaged or corroded to the satisfaction of the Owner prior to incorporating them into the Work.

PART 2 - PRODUCTS

2.01 STEEL FABRICATIONS

A. Materials

1. Structural steel shapes, plates, bars and rods: ASTM A36.

2. Steel plates - bent or cold-formed: ASTM A283, Grade C.

3. Steel sheets: ASTM A366.

4. Carbon steel bolts, studs, nuts and washers: ASTM A307.

5. High strength bolts, studs, nuts and washers for structural steel:

   a. Elevated temperature exposures: ASTM A325-Type I.
   b. General application: ASTM A325-Type I or II.

6. Welding Materials AWS D1.1.

B. Fabrication

1. See general fabrication requirements in Paragraph 2.06.

2. Fabricate miscellaneous steel in accordance with the Drawings. Fabrications include bars and any other miscellaneous steel called for on the Drawings and not otherwise specified.

3. Thoroughly clean steel fabrications of all loose mill scale, rust, grease or oil, moisture, dirt, or other foreign matter and finish in compliance with Paragraph 2.01.C.

C. Finishes

1. Shop priming and field coating shall be as per Division 9.

2.02 STAINLESS STEEL FABRICATIONS

A. Materials

1. Plates, sheets and structural shapes: ASTM A167, Type 304.

2. Pipes: ASTM A312.

3. Bolts, nuts and washers: ASTM A276, Type 316 or Type 304.

B. Fabrication

1. See general fabrication requirements in Paragraph 2.06.

2.03 FIXED STEPS

A. Fixed steps and accessories shall comply with all applicable requirements of OSHA, 29 CFR 1910, and the details on the Drawings and Standard Drawings.

B. Materials for steps shall be steel reinforced polypropylene, or stainless steel for interior submerged steps.

C. Polypropylene steel reinforced steps shall be made of copolymer polypropylene plastic that encapsulates a ½ inch diameter grade 60 steel reinforcing rod. Steel reinforcing shall conform to the requirements of ASTM A615, and copolymer polypropylene plastic shall conform to requirements of ASTM D4101-82. Steps shall have serrated thread and be designed to withstand pullout forces of 1,500 pounds.

2.04 FIXED LADDERS

A. Fixed ladders and accessories shall comply with all applicable requirements of OSHA, 29 CFR 1910, and the details on the Drawings.

B. Materials for exterior or interior ladders shall be stainless steel.

2.05 LADDER SAFETY POST EXTENSION

A. Ladder safety post extensions shall be mounted on all fixed ladders and be spring balanced to latch automatically in up and down positions. They shall be suitable for use by personnel mounting, dismounting, and climbing the ladder. The safety post shall extend upwards at least 42 inches from the standing platform. Each unit shall be a manufactured product installed fully assembled with stainless steel fasteners provided by the manufacturer. Materials shall match the materials of ladder. Ladder safety post extensions shall be LadderUp by The Bilco Company, New Haven, CT, Ladder Safety Extension Post by McMaster-Carr, Santa Fe Springs, CA, or approved equal. Finish and color for safety posts shall be as approved by the Owner.

2.06 FABRICATION - GENERAL

A. Details shall be as specified in the Contract Documents. Form metal work shall be true to detail, with clean, straight, sharply defined profiles, and smooth surfaces of uniform color and texture. Provide fabrications free from defects impairing strength or durability. Ease exposed edges to a small, uniform radius.

B. Shop painting will not be required for galvanized metal steps, stainless steel, aluminum, copper, brass and bronze unless specifically specified.

C. For ladder rungs or capped top ends of side rails. Grind welds on exterior face of siderails or stringers smooth. Accurately fabricate joints for neat, tight fit.

D. Welding of parts shall be in compliance with the latest edition of the AWS structural welding code for steel (D1.1). Welding shall be performed only by welders certified to perform the required welding in compliance with the requirements of the AWS Code. Component parts of built-up members to be welded shall be adequately supported and clamped or held by other adequate means to hold the parts in proper relation for welding.

E. Attachments not made by welding shall be made with self-locking Type 316 stainless steel fasteners.

PART 3 - EXECUTION

3.01 GENERAL INSTALLATION

A. Install steps and accessories where shown on the Drawings and in compliance with manufacturer's Shop Drawings and detailed instructions.

B. Install fabrications, plumb, square and level and securely anchored to supports. Smooth and adjust miters and field cuts to create tight joints.

3.02 LADDER SAFETY POST EXTENSION

A. Provide and install a ladder safety post extension at each fixed ladder. Install in accordance with the manufacturer’s written instructions and so as not to impede the operation of any floor door, hatch, or scuttle above the ladder.

3.03 PROTECTION

A. Protect all fabrications from damage due to work of adjacent trades.

3.04 PAINTING

A. Provide painting in accordance with Sections 09910 and 09920.

3.05 CLEANING

A. As work progresses, remove debris and leave work sites broom clean.

B. Prior to final acceptance, clean steps and safety devices of any paint, mud or other adherents.

END OF SECTION

TECHNICAL PROVISIONS

SECTION 07900

WATERPROOFING

PART 1 - GENERAL

1.01 SCOPE OF WORK

A. The Work of this Section includes providing waterproofing and moistureproofing of underground vaults (fully or partially buried), blow-off structures, and manhole concrete surfaces.

1.02 RELATED WORK

A. Earthwork is included in Section 02200.

B. Precast Concrete Manholes and Boxes are included in Section 02700.

C. Cast-in-Place Concrete is included in Section 03300.

1.03 SUBMITTALS AND SAMPLES

A. The following shall be submitted in compliance with Section 01300:

1. Manufacturer's product data including catalogue cuts and material safety data sheets.

2. Manufacturer's installation instructions.

B. Sample of waterproofing membrane shall be submitted only upon request by the Engineer.

1.04 REFERENCE STANDARDS

A. American Society for Testing and Materials (ASTM)

1. ASTM E96 – Standard Test Methods for Water Vapor Transmission of Materials.

2. ASTM E154 – Standard Test Methods for Water Vapor Retarders Used in Contact with Earth Under Concrete Slabs, on Walls, or as Ground Cover.

1.05 PRODUCT DELIVERY, STORAGE, AND HANDLING

A. Delivery of Materials: Products shall be delivered in original, unbroken packages, containers, or bundles bearing the name of the manufacturer.

B. Storage: Products shall be kept cool, dry, covered from direct exposure to the sun and carefully stored in a manner that will prevent damage and in an area that is protected from the elements.

PART 2 - PRODUCTS

2.01 GENERAL

A. General: Only products certified as complying with the indicated requirements shall be provided.

B. Products: Products shall be new, of current manufacture, and shall be the products of reputable manufacturers specializing in the manufacture of such products.

C. Waterproofing system for any single structure shall be complete and from a single manufacturer.

D. Mechanical Waterproofing: Mechanical waterproofing system shall be a self-adhesive rubberized asphalt and polyethylene sheet type system. The membrane shall be a minimum of 60 mils including rubberized asphalt and polyethylene lamination with a membrane puncture resistance of 50 pounds in accordance with ASTM E154. Permeance of the membrane shall be no greater than 0.05 perms in accordance with ASTM E96.

E. Chemical Waterproofing: Waterproofing coating for exterior surfaces shall be a crystalline type chemical waterproofing, Permaquik Super 200 or an approved equivalent. Color shall be white on the exterior.

F. Manufacturer's Recommendations: Products shall be recommended by the manufacturer for the application indicated.

2.02 BELOW-GRADE WATERPROOFING SYSTEM

A. Mechanical waterproofing system shall be Below Grade Bituthene 3000 as manufactured by Grace Construction Products, CCW MiraDRI 860 as manufactured by Carlisle Coatings & Waterproofing, or an approved equal. These products shall include associated waterproofing system accessories from the same manufacturer such as primer, edge treatment, surface treatment, etc.

B. Chemical waterproofing shall be Permaquik PQ 200 or an approved equivalent. Color shall be white on the exterior.

PART 3 - EXECUTION

3.01 GENERAL

A. All products shall be installed in accordance with the manufacturer's installation instructions.

B. Waterproofing for buried structures with any outside wall length dimension or diameter larger than 10 feet or concrete or masonry walls shall be a mechanical waterproofing system.

C. Waterproofing for buried structures with the largest outside wall length dimension or diameter equal to or less than 10 feet shall be a chemical waterproofing.

3.02 BELOW-GRADE WATERPROOFING COATING SYSTEM

A. Location

1. Mechanical waterproofing shall be applied to the exterior of concrete and masonry walls which are below grade and the exterior of underground vaults as described in Paragraph 3.01.B of this Section

2. Chemical waterproofing shall be applied to the exterior of underground vaults and manhole structures as described in Paragraph 3.01.C of this Section.

B. Surface Preparation:

1. Concrete surfaces shall be stripped of forms and cracks, holes or other defects in the concrete surface shall be repaired in accordance with manufacturer’s recommendations. Concrete surfaces shall be free of oil, dirt, wax, laitance or any other surface debris or contamination to produce a clean foundation for bonding or penetration with the waterproofing system applied.

C. Mechanical Waterproofing System Application:

1. Waterproofing system shall not be applied to fresh or green concrete without proper surface treatment specific to addressing potential negative moisture or vapor interaction with the applied waterproofing system as recommended by the manufacturer. At no time shall the waterproofing system be installed within 3 Calendar Days of placing concrete.

2. All joints in waterproofing membrane shall be lapped of 2.5 inches or greater and corners, ends, protrusions, and other such irregularities shall be treated in accordance with the manufacturer’s recommendations.

3. Waterproofing membrane shall be carefully placed without ripples, fisheyes, warping or stretching of the membrane. Any such substandard work shall be repaired or

replaced in accordance with the manufacturer's recommendations and to the satisfaction of the Owner.

4. Waterproofing membrane shall be place over entire buried surface including roof, walls, and footings, but excepting the underside of floor slabs.

5. Backfilling of structure shall be performed immediately following completion of waterproofing installation. Care shall be taken during backfilling operations to avoid damage of the waterproofing system.

D. Chemical Waterproofing Application

1. Apply waterproofing to wet waterblasted or new concrete surfaces in accordance with manufacturer's recommendation.

2. Backfill exterior surfaces with wet backfill material 24 hours following application of waterproofing.

END OF SECTION

TECHNICAL PROVISIONS

SECTION 07920

SEALANTS

PART 1 - GENERAL

1.01 SCOPE OF WORK

A. Furnish all labor, material, equipment, incidentals, and services necessary to install the following:

1. Joint sealants for exterior and interior structure components.

1.02 RELATED WORK

A. Cast-in-Place Concrete is included in Section 03300.

B. Concrete Joints and Joint Accessories are included in Section 03250.

1.03 SUBMITTALS

A. General: Submit the following according to Section 01300.

B. Product data from manufacturer of joint sealant product required.

1. Certification by joint sealant manufacturer that sealant plus the primer and cleaner required for sealant installation comply with local regulations controlling use of volatile organic compounds; that the proposed product is free of PCBs and lead.

1.04 QUALITY ASSURANCE

A. Installer Qualifications: Engage an experienced installer who has completed joint sealant applications similar in material, design, and extent to that indicated for the Work that have resulted in construction with a record of successful in-service performance.

B. Single Source Responsibility for Joint Sealant Materials: Obtain joint sealant materials from a single manufacturer for each different product required.

C. Mixing and Application of Sealants: Mix and apply sealants in accordance with the manufacturer's printed instructions. Initial mixing and application shall be under the direct supervision of the manufacturer's representative.

1.05 DELIVERY, STORAGE, AND HANDLING

A. Deliver materials to the Site in original unopened containers or bundles with labels indicating manufacturer, product name and designation, color, expiration period for use, pot life, curing time, and mixing instructions for multi-component materials.

B. Store and handle materials in compliance with manufacturer's recommendations to prevent their deterioration or damage due to moisture, high or low temperatures, contaminants, or other causes.

PART 2 - PRODUCTS

2.01 MANUFACTURERS

A. Available Manufacturers: Subject to compliance with requirements, manufacturers offering products that may be incorporated in the Work include, but are not limited to, the following:

1. Sika Corp.

2. Sonneborn Building Products Div., ChemRex, Inc.

2.02 MATERIALS, GENERAL

A. Compatibility: Provide joint sealant, joint filler, and other related materials that are compatible with one another and with joint substrates under conditions of service and application, as demonstrated by sealant manufacturer based on testing and field experience.

B. Colors: Provide color of exposed joint sealant to comply with the following:

1. Provide selections made by Owner from manufacturer's full range of standard and custom colors for products of type indicated.

2.03 ELASTOMERIC JOINT SEALANT

A. Elastomeric Sealant Standard: Provide manufacturer’s standard chemically curing elastomeric sealant that complies with ASTM C920 and other requirements indicated, including those requirements referencing ASTM C 920 classifications for Type, Grade, Class, and Uses.

B. Multi-Part Polyurethane Sealant: FS TT-S-00227E, Class A, Type I (self-leveling) and Type II (non-sag), two-part elastomeric sealant. Comply with ASTM C 920, Type M, Class 25, Grade P or NS.

2.04 JOINT SEALANT BACKING

A. General: Provide sealant backing of material and type that are nonstaining; compatible with joint substrates, sealant, primer and other joint fillers; and approved for applications indicated by sealant manufacturer based on field experience and laboratory testing.

B. Elastomeric Tubing Joint Filler: Neoprene, butyl, EPDM, or silicone tubing complying with ASTM D 1056, nonabsorbent to water and gas, capable of remaining resilient at temperatures down to -26°F. Provide product with low compression set and of size and shape to provide a secondary seal, to control sealant depth, and otherwise contribute to optimum sealant performance.

C. Bond-Breaker Tape: Polyethylene tape or other plastic tape as recommended by sealant manufacturer for preventing sealant from adhering to rigid, inflexible joint filler materials or joint surfaces at back of joint where such adhesion would result in sealant failure. Provide self-adhesive tape where applicable.

2.05 MISCELLANEOUS MATERIALS

A. Primer: Material recommended by joint sealant manufacturer where required for adhesion of sealant to joint substrates indicated.

B. Cleaners for Nonporous Surfaces: Chemical cleaners acceptable to manufacturer of sealant and sealant backing materials, free of oily residues or other substances capable of staining or harming in any way joint substrates and adjacent nonporous surfaces, and formulated to promote optimum adhesion of sealants with joint substrates.

PART 3 - EXECUTION

3.01 PREPARATION

A. Surface Cleaning of Joints: Clean out joints immediately before installing joint sealant to comply with recommendations of joint sealant manufacturer.

B. Joint Priming: Prime joint substrates where recommended by joint sealant manufacturer. Apply primer to comply with joint sealant manufacturer's recommendations. Confine primers to areas of joint sealant bond; do not allow spillage or migration onto adjoining surfaces.

3.02 INSTALLATION OF JOINT SEALANTS

A. General: Comply with joint sealant manufacturer's installation instructions applicable to products and applications indicated, except where more stringent requirements apply.

B. Sealant Installation Standard: Comply with recommendations of ASTM C 1193 for use of joint sealants as applicable to materials, applications, and conditions indicated.

C. Install bond breaker tape between sealants where backer rods are not used between sealants and joint fillers or back of joints.

D. Installation of Sealant: Install sealant by proven techniques that result in sealant directly contacting and fully wetting joint substrates, completely filling recesses provided for each joint configuration, and providing uniform, cross-sectional shapes and depths relative to joint widths that allow optimum sealant movement capability. Install sealant at the same time sealant backing is installed.

E. Tooling of Nonsag Sealants: Immediately after sealant application and prior to time skinning or curing begins, tool sealant to form smooth, uniform beads of configuration indicated, to eliminate air pockets, and to ensure contact and adhesion of sealant with sides of joint. Remove excess sealant from surfaces adjacent to joint. Do not use tooling agents that discolor sealants or adjacent surfaces or are not approved by sealant manufacturer.

1. Provide concave joint configuration per Figure 5A in ASTM C 1193, unless otherwise indicated.

3.03 SEALANT INSTALLATION LOCATIONS

A. Exterior/Interior Locations:

1. Control Joints and Construction Joints Where Noted on the Drawings: Two-part polyurethane sealant, self-leveling for horizontal surfaces, non-sag for vertical surfaces and for surfaces sloping more than 30 degrees from horizontal.

3.04 CLEANING

A. Clean off excess sealant or sealant smears adjacent to joints as work progresses by methods and with cleaning materials approved by the manufacturer of the joint sealant and of products in which joints occur.

3.05 PROTECTION

A. Protect joint sealants during and after curing period from contact with contaminating substances or from damage resulting from construction operations or other causes so that they are without deterioration or damage at time of the Contractor's filing of the Certificate of Completion.

END OF SECTION

TECHNICAL PROVISIONS

SECTION 09873

COLD-APPLIED PLASTIC TAPE COATING

PART 1 - GENERAL

1.01 DESCRIPTION

A. This section includes materials and application of cold-applied plastic tapes on steel pipe in accordance with AWWA C209, C214 and as modified herein.

B. All steel pipe, fittings, specials, and joints shall have a cold-applied plastic tape placed on the steel pipe surface, followed by a cement mortar coating.

1.02 RELATED WORK

A. Steel pipe and fittings are included in Section 02620.

1.03 REFERENCE SPECIFICATIONS, CODES AND STANDARDS

A. American Water Works Association (AWWA)

C209 Cold-Applied Tape Coatings for the Exterior of Special Sections, Connections, and Fittings for Steel Water Pipelines.

C214 Tape Coating Systems for the Exterior of Steel Water Pipelines.

B. NACE International.

RP-0274 High Voltage Electrical Inspection of Pipeline Coatings Prior to Installation.

C. The Society for Protective Coatings.

SP-1 Solvent Cleaning.
SP-6 Commercial Blast Cleaning.

1.04 QUALIFICATIONS OF MANUFACTURERS AND APPLICATOR

A. The manufacturer must demonstrate a minimum of five years' successful application of tape coating system on large diameter steel water pipelines as specified herein.

B. Assign supervisors of tape coating operations with at least two years' continuous recent experience in the application of tape and coating systems for steel pipe.

1.05 SUBMITTALS

A. Certification of test results of physical and performance characteristics of each batch of primer and each tape material specified herein.

B. Tape application procedure approved by tape manufacturer.

C. Tape application method approved by tape manufacturer to minimize voids at weld seams.

D. The names and qualifications of the workers and supervisors to be employed on the coating operation a minimum of 14 Calendar Days prior to the start of taping operations.

PART 2 - MATERIALS

2.01 COLD-APPLIED PLASTIC TAPE COATING

A. Provide cold-applied plastic tape coating in accordance with AWWA C209, AWWA C214, and as specified herein. Furnish plant and field applied primer and plastic tape, and plant and field applied repair tape by a single manufacturer. Meet or exceed the physical properties of tape materials for plant and field application criteria listed when tested in accordance with the methods described in AWWA C209 and AWWA C214, Section 5.1, "Coating System Tests."

B. The tape coating systems consist of an exterior cold-applied plastic tape on the bare metal surface of steel pipe with a cement mortar coating applied over the tape system. Tape coating systems are specified for:

1. Normal plant cold-applied tape.

2. Plant cold-applied tape for special sections, connections and fittings, and plant repairs of cold-applied tape.

3. Field joint, field coated fittings and repair of field cold-applied tape.

C. All materials for the tape coating system must be from the same manufacturer.

2.02 PRIMER

A. Tape primer or adhesive which is placed by machine or hand application shall be free of volatile organic compounds and a minimum 18 percent solids product comprised of 100 percent butyl-based elastomers with resins for adhesion, cathodic disbonding and stress corrosion cracking inhibitors. The primer shall contain both corrosion inhibitors and adhesion promoters in a liquid form which will fill surface irregularities. The primer shall be Polyken #1039 primer or an approved equivalent.

2.03 STORAGE PRIMER

A. Storage primer on the exposed steel at the tape cutbacks shall be applied to protect otherwise exposed steel which will receive a field applied tape coating. The primer shall be a minimum 19 percent solids product comprised of a rubber and resin base and solvent. Storage primer shall be two coats of Polyken #1027 or an approved equivalent to a total MDFT of 2-3 mils.

2.04 PLANT COLD-APPLIED PLASTIC TAPE SYSTEM

A. Anti-corrosion inner layer tape shall be black in color, have a 20 mil minimum thickness, and be a butyl based elastomer with resins for adhesion, cathodic disbonding and durability for intended service. Tape shall be Polyken #989-20 with a machine-applied 1-inch overlap or an approved equivalent. Tape shall also have the following minimum properties:

Tensile Strength at Break:	$\geq$ 30 lb/in width
Elongation at Break:	$\geq$ 200 percent
Adhesion to Steel:	$\geq$ 100 oz/in width
Adhesion to Primed Steel:	$\geq$ 300 oz/in width
Adhesion to Backing:	$\geq$ 40 oz/in width
Dielectric Strength:	$\geq$ 20 kv
Insulation Resistance:	1×10^{12} ohms
Water Vapor Transmission:	$< 0.2 gm/100in^2/24$ hr @70°F
Cathodic Disbonding at 68°F for 30 days:	0.2 in^2 (ASTM G8)
Shear Resistance at 68°F for 4 weeks:	0.2 mm/day
Hydrolytic Stability, 200hrs at 98°C H20. Adhesion:	> 150 oz/in
Thermal Stability, 2,000 hrs at 100°C air. Adhesion:	> 150 oz/in

B. The first mechanical outer layer tape shall be gray in color, have a 30 mil minimum thickness, and be a butyl-based elastomer with resins for adhesion and durability for intended service. Tape shall be Polyken #955-30 with a machine-applied 1-inch overlap or an approved equivalent. Tape shall also have the following minimum properties:

Tensile Strength:	$\geq$ 45 lb/in width
Elongation:	$\geq$ 200 percent
Adhesion to Backing:	40 oz/in width
Water Vapor Transmission:	< 0.2 gm/100in^2/24 hr @70°F
Dielectric Strength:	$\geq$ 25 kv

C. The second mechanical outer layer tape shall be white in color, have a 30 mil minimum thickness, and be a butyl-based elastomer with resins for adhesion and durability for intended service. Tape shall be Polyken #956-30 UVI with a machine-applied 1-inch overlap or an approved equivalent. Provide certification of UV protection. Tape shall also have the following minimum properties:

Tensile Strength:	$\geq$ 55 lb/in width
Elongation:	$\geq$ 200%
Adhesion to Backing:	60 oz/in width
Water Vapor Transmission:	< 0.2 gm/100in^2/24 hr @70°F
Dielectric Strength:	$\geq$ 25 kv

D. Total coating system shall be the Polyken YGIII system or an approved equivalent.

2.05 PLANT COLD-APPLIED PLASTIC TAPE COATINGS FOR SPECIAL SECTIONS, CONNECTIONS AND FITTINGS, AND PLANT REPAIR COLD-APPLIED PLASTIC TAPE MATERIAL

A. Anti-corrosion inner layer tape shall be black in color, have a 50 mil minimum thickness, and be a butyl-based elastomer with resins for adhesion and durability for intended service. Tape shall be Polyken #932-50 with a 1-inch overlap or an approved equivalent.

Tensile Strength:	$\geq$ 25 lb/m width

Elongation:	$\geq$ 150%
Adhesion to Steel:	300 oz/in width
Adhesion to Backing:	60 oz/in width
Water Vapor Transmission:	< 0.2 gm/ 100in^2/24 hr @70°F
Dielectric Strength:	$\geq$ 28 kv

B. The second mechanical outer layer tape shall be black in color, have a 60 mil minimum thickness, and be a butyl-based elastomer with resins for adhesion and durability for intended service. Tape shall be Polyken #955-30 with a 50 percent overlap or an approved equivalent. Tape shall also have the following minimum properties:

Tensile Strength:	$\geq$ 45 lb/in width
Elongation:	$\geq$ 200%
Adhesion to Backing:	40 oz/in width
Water Vapor Transmission:	< 0.2 gm/100in^2/24 hr @70°F
Dielectric Strength:	$\geq$ 50 kv

2.06 FIELD JOINT, FIELD COATED FITTINGS, AND FIELD REPAIR COLD-APPLIED PLASTIC TAPE

A. Joint filler tape shall be black and have a minimum thickness of 125 mil, and be Polyken #939 or an approved equivalent with the following properties:

Elongation:	> 600%
Solids Content:	98% minimum
Penetration Hardness:	85-105 DMM (300 GM moving load)
Low Temperature Flexibility:	No cracking when bent around a 1-inch mandrel at -10°F
Chemical Resistance:	No visible deterioration after 30 days immersion in the following solutions: 5% Caustic Potash; 5% HCL, 5% H2SO4; Saturated HS

B. Field joint, field fitting, and field repair of outer layer tape shall be Polyken #932-50 with a 50 percent overlap or approved equivalent.

PART 3 - EXECUTION

3.01 COLD-APPLIED PLASTIC TAPE COATING

A. Apply plastic tape coating in accordance with AWWA C214, C209, and as modified herein. Factory-applied tape systems shall be applied in an inside protected environment free of dust and other airborne pollutants or particles.

B. Certificate of Compliance: Prior to shipment of pipe, furnish a certificate of compliance stating that tape materials and work furnished hereunder will comply or have complied with the requirements of these specifications and AWWA C209 and C214. The certification shall be substantiated by the tape manufacturer's production quality control test results. The tape manufacturer shall supply test data on each batch used.

C. The tape manufacturer shall furnish a representative to provide assistance during the initial application of all tape materials to ensure proper installation.

1. Retain the tape manufacturer’s representative for a minimum of five consecutive Working Days of tape coating following the start of pipe tape shop application. At the completion of the five-day period, the tape manufacturer's representative shall meet with the Contractor and Owner to review and update the tape coating operation plan. If, in the opinion of the Owner, significant modifications to the tape coating operations are identified in the initial five-day inspection period, retain the tape manufacturer's representative for an additional length of time, as necessary to correct all deficiencies in the application of the tape coating system.

2. The tape manufacturer’s representative shall be retained by the Contractor for the duration of the work and shall respond to periodic field problems and questions from the Contractor and Owner within a sufficient time period so as not to cause delay in the installation and backfill of pipe. Delays caused by insufficient response time by the tape manufacturer’s representative will not be cause for granting of Extra Work. Costs incurred for retention of the tape manufacturer's representative shall be borne by the Contractor.

3. Properly document any modifications to the Pipe Manufacturer's tape coating operation and submit within three Working Days to the Engineer in accordance with shop drawing submittal procedures.

D. Any transport of the tape-wrapped pipe shall be accomplished without leaving any visible or damaging imprint or gouges on the surface of the tape. Sufficient padding shall be installed on all lifting devices to prevent the imprint. Adequate supporting areas on lifting and transporting equipment shall be provided to prevent the imprint.

E. Storage of the tape-wrapped pipe shall be accomplished without leaving any visible or damaging imprint or gouges on the surface of the tape. Sufficient bearing area shall be

provided on the supporting facility to prevent the imprints from occurring. Sand pipe supports are recommended.

3.02 STRAIGHT RUN PIPE APPLICATION

A. For straight line pipe, plant applied conditions, the cold-applied plastic tapes shall be a four layer system consisting of: (1) primer; (2) corrosion prevention tape (inner layer); (3) mechanical protective tape (first outer layer); and (4) mechanical protective tape (second outer layer).

B. Perform the entire coating operation at a one-station operation where the pipe is supported at the ends in a manner which will permit the application of the primer and plastic tape. The cement mortar coating may be applied at the same station as the tape, or at a second station. No application involving rollers to support the pipe during the primer and plastic tape application will be permitted.

If a second station for mortar coating is used, prior to the mortar coating, the exterior of the tape-wrapped pipe shall be cleaned by brushing or using a low pressure air stream to remove all visible sand, dust or other foreign particles on the surface of the tape-wrapped pipe. Cleaning shall not damage in any way the tape wrapping. The pipe shall be holiday tested to ensure that no tears have occurred.

C. Perform the entire coating operation by experienced workers skilled in the application of cold-applied plastic tapes and cement mortar coating under qualified supervisors. The Owner is to be immediately informed of any personnel changes associated with the pipe coating operation.

D. All equipment for blasting and application of the tape coating system shall be of such design and condition to comply with all the requirements of these Specifications. Immediately repair or replace equipment which, in the opinion of the Owner, does not produce the required results. Include equipment and a repair procedure for correcting defective tape application for use under this specification in the steel pipe fabrication plan. Make available for review a copy of this portion of the fabrication plan, and any updates, at the location of the coating operation, and a repair procedure for correcting defective tape application.

E. Remove the exterior weld bead along the entire exterior surface of the pipe. The exterior weld bead shall be flush with the exterior surface of the pipe with a maximum tolerance of plus 1/32-inch. Removal of the weld bead is to be conducted in such a manner that no gouging or nicking of the plate surface will occur. This operation is to result in a smooth exterior surface with no ridges or valleys, which may result in bridging or disbonding of the tape from the surface of the pipe.

F. Surface preparation shall conform to AWWA C214 and the following.

1. Bare pipe shall be clean of all foreign matter such as mud, mill lacquer, wax, coal tar, asphalt, oil, grease, or any contaminants. Wash off any chemical solutions used

in cutting or welding with hot water and allow the surface to dry. Remove welding slag or scale from all welds by wire-brushing, hammering, or other satisfactory means. Remove welding splash globules prior to priming.

2. Prior to blast cleaning, inspect surfaces and, if required, preclean in accordance with the requirements of SSPC SP-1, Solvent Cleaning, to remove oil, grease, and all foreign deposits. Remove visible oil and grease spots by solvent wiping. Use only approved solvents that do not leave any residue. Include in the manufacturer's fabrication plan the cleaning solvent applications procedure and safety precautions. Preheating to remove oil, grease, and mill scale will be permitted; provided, that the pipe is to be cement mortar lined in the field; and provided, all pipe is preheated in a uniform manner to avoid distortion. Do not exceed preheat temperatures of 500°F.

3. Use on all affected steel-plate work, suitable and effective measures for eliminating the inclusion of gas forming elements, or other detrimental conditions, in any of the shop or field welds which results in any condition found to be detrimental to the successful application and bonding of primer, plastic tape, and cement mortar coating. Said measures to include time-curing the pipe sufficiently, thoroughly neutralizing the gas forming elements, or other approved treatment.

G. Blast cleaning shall conform to AWWA C214 and the following.

1. Blast the pipe surface using a commercially available shot grit mixture to achieve a prepared surface equal to that which is specified in SSPC SP-6, Commercial Blast Cleaning.

2. For plant mortar-lined pipe, perform blast cleaning of said exterior surfaces after the initial curing of the spun mortar lining. Perform the exterior blast cleaning in such a manner as not to endanger the mortar lining in the pipe. Completely remove corrosion and foreign substances from the exterior of the pipe in the blastcleaning operation, and apply primer immediately after completion of blast cleaning.

3. The shot grit mixture shall not exceed 40 percent shot to 60 percent grit. The shot grit mixture is to be determined prior to the start of blast cleaning operations and this mixture ratio is not to be modified throughout the duration of the blast cleaning operations without the written approval of the Engineer.
4. Achieve from abrasive blasting an anchor pattern profile a minimum of 1.0 mil, but not exceeding 2.0 mils. Provide anchor pattern standards in the form of a 3-dimensional standard plate which depicts a commercial blast profile. Prepare a sample of the blasted surface on a representative steel plate measuring 6-inches by 6-inches by 1/4-inch or purchase standard industry plate samples of various blast finishes for comparisons. Purchase standard plates from NACE, meeting NACE TM0 1-75, and conforming to NACE No. 3 standard using grit. Establish by agreement with the Engineer the visual standards that meet the specified anchor pattern and degree of cleanliness. Upon the establishment of the said standards, seal the steel plate using a clear acrylic coating, moisture proof plastic bag, or other approved means to protect the plate from surface contamination or corrosion. Use

this plate as a visual comparitor during the blastcleaning and coating operations. Measure the anchor pattern or profile of the blasted surface using comparitor tape as specified herein.

5. Inspect the blast cleaned exterior pipe surface for adequate surface preparation prior to application of the primer. Surface comparitor tapes are to be used by the manufacturer in at least eight random areas, selected by the Engineer, along the first 40-foot length of pipe wrapped each day. The results of the surface comparitor tapes are to be documented on the quality control sheet for each pipe section.

6. Coat each pipe section with primer and tape within the same day of being blast cleaned. Do not allow blasted and/or blasted and primed pipe to sit overnight. All blasted and primed pipe must be coated by the end of the day. No coating will be permitted on pipe sections showing evidence of rust.

H. Primer application shall conform to AWWA C214 and the following.

1. Prior to primer application, clean the pipe surface free of foreign matter such as sand, grease, oil, grit, rust particles, and dirt.

2. Apply the primer in a uniform thin film at the coverage rate recommended by the manufacturer. Meet the recommendations of the manufacturer for the state of dryness of the primer prior to the application of the inner layer of tape. Make available at all times, primed surfaces for inspection prior to the application of the inner layer tape. Maintain adequate safety precautions, as outlined in the manufacturer's fabrication plan, throughout the application of the primer.

3. Limit the application of primer to that length of pipe which can be taped within the same work day. Pipe coated with primer which was not taped within the same work day shall be rejected at the discretion of the Engineer. The primer shall be removed and the surface shall be reprimed.

4. Protect primer coated pipe sections from moisture, dirt, sand, and other potentially contaminating materials. Protect priming operations from dust or suspended particles during times of high wind. Sections not adequately protected shall be rejected by the Engineer. If rejection occurs due to contamination of the primer, completely remove the primer from the exterior of the pipe section and reprime the surface.

5. Thoroughly mix the primer by agitation using Jiffy Mixer or an approved equal powered by air or explosion proof electric motor. Continuously mix and agitate primer during application to prevent settling or lumping.

6. Apply primer only to a dry pipe surface. Whenever the ambient air temperatures are cold enough to cause gelling of the primer, the use of heaters will not be permitted to return the primer back to a fully liquid state. Use new primer at a minimum of 40°F.

7. Apply primer to the exposed steel pipe at tape cutbacks to prevent oxidation of the cleaned metal surface. Spray apply minimum of 1.5 mils and maximum of 3.0 mils DFT of storage primer to exposed steel per the manufacturer's recommendations. Do not place storage primer on the edge of the steel plate.

8. Certify the solvent of the primer and storage primer by the pipe manufacturer stating compliance with air pollution control rules and regulations and all requirements of agencies and other governmental bodies having jurisdiction. Include air pollution control rules and regulations regarding the application of the primer in the pipe manufacturer's fabrication plan.

I. Inner layer tape application:

1. Apply the inner layer tape directly onto the primed surface using approved mechanical dispensing equipment to assure adequate, consistent tension on the tape as recommended by the tape manufacturer. Use rollers to apply pressure on the tape as it comes in contact with the pipe. Make necessary adjustments to mechanical application equipment to assure a uniform, tight coating. Maintain a tight, smooth, mechanically induced, wrinkle and bubble free coating throughout application process.

2. The application of tension shall be such that the width of tape will be reduced between 1-1/2 to 2 percent of tape width prior to the pull. Provide a pressure readout gauge and chart recorder, suitable to the Engineer, with the tape let-off machine to document the tape tension during application.

3. Apply inner layer tape at a minimum roll temperature of 70°F. Continuously monitor the temperature of the tape within 12 inches of the point of contact with the pipe surface. Use a chart recorder, suitable to the Engineer, to document the temperature of the tape during application. Sections where the tape application tension and temperature is not maintained within manufacturer's recommendations shall be rejected and the tape removed from the entire pipe section and reapplied.

4. Continuously electronically test per NACE RP-0274 the inner tape layer at 6,000 volts immediately following application of the tape by a holiday tester permanently mounted to the tape application station and equipped with an indicator light and audio buzzer, suitable to the Engineer, to alert the workmen of the presence of holidays in the coating system.

5. Spirally wrap the inner layer tape over longitudinally welded pipe; however, for spiral welded pipe, the angle of the inner layer tape shall be wrapped as parallel as practicable to the spiral weld of the pipe or as approved by the Engineer. Provide a 1-inch nominal tape overlap, minimum overlap 3/4-inch.

6. Splice each new roll by overlapping the new tape over the end of the preceding roll by at least 6 inches. Perform this end lap splice by hand or by a mechanical applicator such that the splice is wrinkle free and maintains the continuity of the

inner wrap coating. Maintain the wrapping angle of the new roll parallel to that of the previous roll.

7. Provide cutbacks 10 inches from and parallel to the end of the pipe. Perform cutbacks using a cutting device that is guided from the end of the pipe to insure a uniform, straight cutback.

J. Mechanical outer layer tape application:

1. Apply the first mechanical outer layer of tape over the inner layer tape using the same type of mechanical equipment used in the application of the inner layer tape. No overlap splice of the other layer coinciding with the overlap splice of the inner layer will be permitted. Provide a minimum 6-inch separation between overlap of splices. Apply two mechanical outer layers of tape as specified herein. The inner layer tape shall be electrically tested, inspected, and approved prior to the application of the first mechanical outer layer tape and the first mechanical outer layer tape shall also be visually inspected and approved prior to the application of the second mechanical outer layer tape. Ensure that both mechanical outer layer tapes are smooth, tight, and wrinkle-free.

2. Apply mechanical outer layer tapes in accordance with the requirements for the inner layer tape, except that the minimum tape roll application temperature shall be 90°F. Monitoring for tension and temperature will be required for the mechanical outer layer tapes. The use of rollers to apply pressure on the tape is not required during application of the mechanical outer layer tapes. Holiday testing of the mechanical outer layer tapes is not required during tape application. Test the complete tape system prior to coating as specified herein.

K. Storage primer application shall conform to AWWA C214 as modified herein:

1. Prior to storage primer application, clean the pipe surface free from foreign matter such as sand, grease, oil, grit, rust particles, and dirt.

2. Thoroughly mix the primer by agitation using Jiffy Mixer or an approved equal powered by air or explosion proof electric motor. Continuously mix and agitate primer during application to prevent settling or lumping.

3. Apply primer only to a dry pipe surface. Whenever the ambient air temperatures are cold enough to cause gelling of the primer, the use of heaters will not be permitted to return the primer back to a fully liquid state. Use new primer at a minimum of 40°F.

4. Apply storage primer to the exposed steel pipe at tape cutbacks to prevent oxidation of the cleaned metal surface. Spray apply minimum of 1.5 mils and maximum of 3.0 mils DFT of storage primer to exposed steel per the manufacturer's recommendations. Do not place storage primer on the edge of the steel plate.

5. Certify the solvent of the primer and storage primer by the manufacturer stating compliance with air pollution control rules and regulations and all requirements of agencies and other governmental bodies having jurisdiction. Include air pollution control rules and regulations regarding the application of the primer in the manufacturer's fabrication plan.

3.03 FITTINGS COATED AT THE PLANT

A. Coat fittings which cannot be machine coated in accordance with AWWA C209 using materials as specified herein. Weld bead preparation, surface preparation, blast cleaning, primer and tape application shall be as specified for straight run pipe. Apply an inner layer tape of Polyken #932-50 with a 1-inch tape overlap on all plant coated fittings. Apply an outer layer of Polyken #955-30 as specified herein with a 50 percent overlap on all plant coated fittings. Provide a minimum thickness of 110 mils for the total tape coat system for plant coated fittings.

B. When more than 30 percent of the tape coating is removed from the circumference of the pipe for the installation of fittings, remove the tape coating system on the remaining pipe. Reprime and retape the fitting and pipe in accordance with these specifications.

C. Test all completed tape coated fittings in the presence of the Owner's Materials Inspector with an electrical flaw detector per NACE RP-0274 prior to installation of cement mortar coating. Applied voltage shall be in the range of 11,000 to 15,000 volts. Repair any holidays found.

D. Follow the procedure described herein for tape coating repair for fittings and field joints. Repair cement mortar coating defects in accordance with these specifications.

E. Apply cement mortar coating in accordance with Section 02620 and over the tape coated fittings immediately after completion of tape coating, testing, and inspections.

3.04 COATING OF FIELD JOINTS

A. Field cold-applied plastic tape coating shall be in accordance with AWWA C209, as modified herein.

B. Prior to welding any field joints, wrap an 18-inch strip of heat resistant material over the entire coated pipe sections on each side of the joint to be welded to avoid damage to the plant applied coating by the hot weld spatter. Do not use the coated portion of the pipe for grounding.

C. Immediately prior to exterior welding of the pipe for double welded lap joints, remove storage primer and wire brush area to be welded per the manufacturer's recommendations.

D. No tape coating will be permitted until the welding has been completed and the pipe section has cooled sufficiently so as not to damage the integrity of the tape coating system.

E. Do not permit trapped air under the tape in the joint.

F. After joint welding, remove flash rusting by mechanical means such as a wire brush. Wire brush the weld, storage primed steel and all exposed steel. Remove all burrs and weld slags to achieve a smooth surface.

G. Clean the pipe surface free of mud, mill lacquer, wax, tar, grease, or any foreign matter. Remove visible oil or grease using an approved solvent that will not leave any residue on the pipe surface. The pipe surface shall be free of any moisture and all foreign matter prior to the application of primer.

H. Prior to the application of the field applied tape coating, test the plant applied tape coating in the presence of the Owner with an electrical flaw detector. Repair all holidays and physical damage to the plant applied tape coating prior to application of the field applied tape coating.

I. Pack irregularities in joint with Polyken #939 solid mastic filler. All irregularities shall be made smooth so as not to cause warping or wrinkling or interfere with the proper placement of subsequent tape wrap.

J. Apply primer by brush or roller (4 mil wet. 1-1.5 mil DFT).

K. After primer has dried, apply tape as specified in Item 2.05 of this Section to the joint and extend a minimum of 3 inches onto the mill coat. End splices shall be a minimum of 6 inches and shall be staggered. The tape coating shall overlap at least 3 inches on the adjacent tape wrap. Maintain 55 percent overlap on all field joint tape to produce a minimum thickness of 100 mils.

L. Apply tape with sufficient tension to conform with the surface irregularities. The finished wrap shall produce a smooth, wrinkle-free surface.

M. Test the final applied tape coating in the presence of the Owner with an electrical flaw detector. Repair all holidays and physical damage to the final applied tape coating prior to application of the mortar coating.

N. Apply mortar coating in accordance with Section 02620 over the tape coated joint immediately upon completion of tape wrapping, testing, and inspections.

3.05 INSPECTION OF FACTORY-APPLIED TAPE COATING

A. Perform all coating work in the presence of the Owner's Materials Inspector. Any coatings applied in the absence of the Materials Inspector may be rejected.

1. Provide the Materials Inspector with reasonable facilities and space, at the Contractor's expense, for the inspection, testing, and obtaining of any information required to determine the characteristics of the material to be used. Furnish to the Materials Inspector at least two electrical pipe coating flaw detectors at the plant and one electrical pipe coating flaw detector per pipe installation heading in the field to aid in the inspection of the tape coating.

2. Provide free access to the Materials Inspector to plants of the manufacturer furnishing the materials and to the worksite.

B. Holiday detection for tape coating:

1. Prior to the application of the mechanical outer layer tapes, electrically test the inner layer tape for any flaws in the coating with a suitable holiday detector as approved by the Materials Inspector. Test the total tape coating system a second time immediately prior to installing cement mortar coating. The detector for both tests shall impress a voltage conforming to NACE Standard RP-0274-98 "Standard Recommended Practice–High Voltage Electrical Inspection of Pipeline Coatings." The voltage to be used to electrically test the tape shall be included in the manufacturer's fabrication plan.

2. Clearly mark all holidays electrically or otherwise detected, due to flaws, or mishaps, upon discovery, and immediately repair. Discontinue wrapping of the first mechanical outer layer tape of any pipe section until the detected holiday has been repaired. Perform repairs using methods specified herein. After the repair, retest the affected areas with the holiday detector prior to the application of the outer layer wrap. This process will be done until the coating has successfully passed the test.

3.06 TAPE COATING REPAIRS

A. Furnish and install plant and field cold-applied plastic repair tapes in accordance with AWWA C209 using plant and field tape materials as specified herein. Provide the cold-applied plastic repair tapes from the same manufacturer as the plant applied plastic tape manufacturer. Repair tapes and primer shall be completely compatible with the tape system used for straight run pipe. Only one repair per 50-foot length of pipe shall be made.

B. Repair any damage found in the total coating system by removing the outer layer tapes and inner layer tape from the damaged area of the pipe. Thoroughly clean the damaged area using methods and materials approved by the Engineer. The methods and materials to be used in repairing the damaged areas will depend on the type and cause of damage. After cleaning, apply a suitable primer, followed by a patch of repair tape over the affected area. Overlap the patch repair tape over the undamaged coating a minimum of 4 inches in all directions. Retest the repaired area with a holiday detector. Wrap an outer layer tape over the repaired area. The outer layer tape shall be the same material as the "Second Mechanical Outer Layer Tape" as specified herein. Overlap by a minimum 6 inches past the repair tape area. At the discretion of the Engineer,

depending on the extent of the repair area, wrap the outer layer tape around the entire circumference of the pipe.

C. If the outer layer tapes are damaged and holidays or other flaws are not detected in the inner layer tape at the same area, the repair of the inner layer tape may not be necessary; however, if the damage is determined by the Engineer to be severe enough to jeopardize the integrity of the inner layer tape, the Contractor shall repair the inner layer tape. If such action is required, remove the outer layer tapes up to the boundaries of the damaged area, taking care not to damage the inner layer tape any further. Before replacing the outer layer tapes, apply a holiday detector to the inner layer tape to determine that no damage has been made to this primary tape coating during the outer layer removal process. Perform the repair of the outer layer tapes in accordance with the requirements as described above. Overlap the repair tape over the undamaged coating a minimum of 4 inches in all directions.

D. When the repair area tests show no holiday, apply a notation to the area indicating the test is satisfactory. Apply cement mortar coating over the cold-applied plastic tape coating.

3.07 PROTECTING COATED PIPE

A. Protect all coated surfaces from damage prior to and during the pipe installation in accordance with these Specifications. Only handle coated pipe using two, minimum 12-inch wide belt slings on spreader bars.

B. In transporting the coated pipe, rest the pipe in saddles not less than 36 inches wide shaped to the outside diameter of the coated pipe. The saddles shall be in contact with the bottom of the pipe along an arc of at least 60 degrees. Completely line saddles with not less than 5/8-inch thick rubber belting. This belting shall overlap the edges of the saddles not less than 3 inches. No nails nor any other fasteners that may damage the coated pipe will be permitted in installing the rubber belting on saddles. Any damaged pipe and coatings will be rejected. Rejected pipe may be repaired and retested when in the judgment of the Engineer an acceptable repair can be achieved.

C. Apply a storage wrap to the exposed tape ends to protect against ultraviolet exposure. Remove the storage wrap prior to completing the field joint. Any tape coated pipe, including exposed tape ends at the cement mortar hold-backs, subjected to ultraviolet exposure longer than 90 Calendar Days prior to installing cement mortar coating shall be physically inspected by the Owner's Materials Inspector or Owner prior to installation of plant or field applied cement mortar coating. Ultraviolet degradation will not be accepted except when, in the opinion of the Owner's Materials Inspector or Owner, the degree of degradation will not affect the integrity of the coating.

END OF SECTION

This page intentionally left blank.

TECHNICAL PROVISIONS

SECTION 09910

SURFACE PREPARATION AND SHOP PAINTING AND COATING

PART 1- GENERAL

1.01 SCOPE OF WORK

A. Furnish all labor, materials, equipment and incidentals required for the surface preparation and application of shop primers on exterior ferrous metals and shop coatings for valves and meters, excluding stainless steels, as specified herein.

B. Items which are to be petrolatum or petroleum wax tape coated as indicated in Section 09930 may receive a shop coating which is compatible with the petrolatum or petroleum wax tape as specified.

1.02 RELATED WORK

A. Steel Pipe and Fittings are included in Section 02620.

B. Field Painting and Protective Coating are included in Section 09920.

C. Petrolatum Tape and Petroleum Wax Tape Coatings are included in Section 09930.

1.03 SUBMITTALS

A. Submit to the Engineer, in accordance with Section 01300, Shop Drawings, manufacturer's specifications and data on the proposed primers and detailed surface preparation, application procedures and minimum dry film thicknesses. Submittals shall include at least the following:

1. Representative physical samples of the proposed primers, if required by the Engineer.

2. Color charts for approval, if required by the Engineer.

3. Technical data sheet from primer or paint manufacturer which includes recommended applications, recommended coating thicknesses for application, recoat window, and other information required to properly apply the primer or paint.

4. Minimum dry film thickness of primers and paints.

1.04 REFERENCE STANDARDS

A. American Society for Testing & Materials (ASTM)

1. ASTM A36 - Standard Specification for Structural Steel

2. ASTM A48 - Specification for Gray Iron Castings

3. ASTM A123 - Standard Specification for Zinc (Hot-Dip Galvanized) Coatings on Iron and Steel Products

4. ASTM A153 - Standard Specification for Zinc Coating (Hot-Dip) on Iron and Steel Hardware

5. ASTM A167 - Standard Specification for Stainless and Heat-Resisting Chromium-Nickel Steel Plate, Sheet and Strip

6. ASTM A193 - Standard Specification for Alloy-Steel and Stainless Steel Bolting Materials for High-Temperature Services

7. ASTM A276 - Standard Specification for Stainless and Heat-Resisting Steel Bars and Shapes

8. ASTM A283 - Standard Specification for Low and Intermediate Tensile Strength Carbon Steel Plates

9. ASTM A307 - Standard Specification for Carbon Steel Bolts and Studs, 60,000 psi Tensile Strength

10. ASTM A312 - Standard Specification for Seamless and Welded Austenitic Stainless Steel Pipe

B. American Water Works Association (AWWA)

1. AWWA C213 - Fusion Bonded Epoxy Coating for the Interior and Exterior of Steel Water Pipelines

C. NACE International

1. NACE SP0188 - Discontinuity (Holiday) Testing of Protective Coatings

D. The Society for Protective Coatings (SSPC)

1. SSPC-SP 6/NACE No. 3 Commercial Blast Cleaning

2. SSPC-SP 10/NACE No. 2 Near-White Blast Cleaning

1.05 DEFINITIONS

A. Submerged exterior surfaces: Items subject to submersion, splash action, high humidity or within vaults. This excludes interior of welded steel pipes and fittings which are included in Section 02620.

B. Non-submerged surfaces: Items not subject to submersion, splash action, high humidity or within vaults.

C. Buried exterior surfaces: Items which are buried.

D. Submerged interior surfaces: Items which contain water.

E. Non-primed surfaces: Items provided by the manufacturer not requiring coatings.

1.06 WARRANTY

A. All coatings shall be provided with a 1 year warranty. The Contractor shall repair any defects in a manner acceptable to the Owner.

PART 2 - PRODUCTS

2.01 MATERIALS FOR NON-GALVANIZED METALS

A. Submerged Exterior Surfaces –

1. All moving parts such as handwheels, levers, operating nuts, etc. - spray apply three coats of Tnemec Co., Inc. Hi-Build Epoxoline Series L69 to a dry film thickness of 3.5 to 5.0 mils per coat or an approved equal by Valspar, DeVoe, DuPont or equal.

2. All non-moving parts such as valve bodies, flanges, bolts, couplings, etc. - surfaces shall be coated and wax taped in accordance with Section 09930. Defect coating free surfaces which are fusion bonded epoxy coated are not required to be wax taped.

B. Non-Submerged Surfaces - Spray apply two coats of Tnemec Co., Inc. Hi-Build Epoxoline Series L69 to a dry film thickness of 3.0 to 5.0 mils per coat or an approved equal by Valspar, Devoe, DuPont or equal.

C. Buried Exterior Surface - All buried exterior surfaces shall be coated and wax taped in accordance with Section 09930. Defect coating free surfaces which are fusion bonded epoxy coated are not required to be wax taped.

D Submerged Interior Surfaces.

1. Apply a chemically cured two-part epoxy coating which is non-hygroscopic, non-water soluble and non-toxic. The coating shall be of the hard high impact type that has resistance to impact and adhesive qualities so that it will not bruise or lose its adhesion to metal as the result of a blow of a wood, rubber or plastic hammer. Coating material shall have sufficient pigmentation to show evenness and thickness of coating application.

2. Epoxy resin coating of the catalyst cured type shall be Induron Ruff-Stuff 3300HMW Epoxy or Tnemec Pota-Pox Series L140F, or an approved equivalent. Epoxy resin coating shall be applied to produce a minimum MDFT of 10.0 mils.

3. As an alternative to epoxy resin or where specified elsewhere in these Specifications, fusion bonded epoxy shall be used. Fusion bonded epoxy shall be applied in accordance with ANSI/AWWA C213, except that the surface preparation shall be as specified herein.

4. The fusion bonded epoxy shall be applied using the fluidized bed or electrostatic spray process. Coating shall be 16 mils thick, Scotchkote 134 (electrostatic) or 206N (fluidized bed) or approved equivalent.

5. Holiday Testing: Coating integrity of all interior coated surfaces shall be tested in accordance with NACE SP0188 both in the factory and in the field.

E. Non-Primed Exterior Surfaces - A heavy shop coat of grease or other suitable rust-resistant coating. This coating shall be of a quality and thickness as necessary to prevent corrosion during all periods of storage and installation.

F. Special Surfaces.

1. Where indicated on the Drawings, provide baked enamel coating AA-C12C42RIX complying with paint manufacturer's specifications for painting.

   a. Chemical Finish: Acid-chromate-fluoride-phosphate conversion coating
   b. Organic Coating: Thermosetting, modified-acrylic enamel primer/topcoat system
   c. Color: As selected by the Owner from manufacturer's full range of colors

G. Compatibility of Coating Systems - Shop priming shall be done with primers that are guaranteed by the manufacturer to be compatible with their corresponding primers and finish coats specified in Section 09920 for use in the field and which are recommended for use together.

H. Aluminum Fabrications - Apply a coat of methacrylate lacquer before shipment.

2.02 MATERIALS FOR GALVANIZED METALS

A. All metals to be galvanized shall receive a coating of zinc applied by immersion in a bath of molten zinc and allowing the items to remain in the batch until their temperature becomes the same as the bath, to a coating of not less than 2 ounces per square foot of surface.

PART 3 - EXECUTION

3.01 APPLICATION

A. Surface preparation.

1. Surfaces of materials to be shop primed shall be prepared as follows:

Materials	Shop Surface Preparation
Non-Galvanized Metals:	
- Submerged Exterior Surfaces	SSPC-SP 10
- Non-Submerged Surfaces	SSPC-SP 6
- Buried Exterior Surfaces	SSPC-SP 10
- Submerged Interior Surfaces	SSPC-SP 10
- Special Surfaces (Baked Enamel)	Inhibited chemicals per manufacturer's recommendations
- Non-Primed Surfaces	Per manufacturer's recommendations
Galvanized Metals:	
- All surfaces	Thoroughly clean and roughen entire surface by abrasive blast with fine abrasive to achieve a 1.5-2.0 anchor profile.

2. Remove scale, rust and other deleterious material. Surfaces shall be clean, dry and free of dust, oil, grease and other foreign material prior to priming.

B. Shop Prime Coat.

1. Metal surfaces which will be inaccessible after erection shall receive two shop coats of the appropriate primer.

2. Shop Prime Coating Application Schedule: After preparation of surfaces, apply prime coats in accordance with the following table unless otherwise specified in the Contract Documents.

Materials	Application
Non-galvanized metals:	
- Submerged exterior surfaces	Items subject to submersion, splash action, high humidity or within vaults. These items may include fabricated ferrous pipe, couplings, valves, flanges, etc.
- Non-submerged surfaces	Items not subject to submersion, splash action, high humidity or within vaults. These items may include miscellaneous fabricated metals, piping and appurtenances within buildings or above ground enclosures
- Buried exterior surfaces	Items which are buried. These items may include valves, couplings, flanges, bolts, nuts, etc.
- Submerged interior surfaces	Items which contain water. These items may include valves, couplings, meters, etc.
- Non-primed surfaces	Items provided by the manufacturer not requiring coatings. These items may include gears, bearing surfaces, other similar items obviously not to be primed.
- Special surfaces (Baked enamel)	As indicated on Drawings
Galvanized Metals:	
- All surfaces	Fabricated metals subject to submersion, splash action, and high humidity or within vaults. These items include interior and exterior of corrugated metal pipe and may also include miscellaneous metals such as ladders, railing, fences, bolts, nuts, plates, supports, hangers, etc.

C. All items to be shop primed shall be blast cleaned as specified for applicable service prior to priming. If, in the opinion of the Owner, any prime coating has been improperly applied or if material contrary to this Section has been used, that coating shall be removed by abrasive blasting to white metal and reprimed in accordance with this Section.

D. All shop prime coats shall be of the correct materials and applied in accordance with this Section. Remove any prime coats not in accordance with this Section by blast cleaning and apply the specified prime coat at no additional cost to the Owner.

E. Shop primed surfaces shall be cleaned thoroughly and damaged or bare spots prepared as approved and retouched with the specified primer before the application of successive paint coats in the field.

F. Properly protect the shop prime and finish coats against damage from weather or any other cause.

G. A shop finish coat shall be equal in appearance and protection quality to a field applied finish coat. If, in the opinion of the Owner, a shop finish coat does not give the appearance and protection quality of other work of similar nature, prepare the surfaces and apply the coat or coats of paint as directed by the Owner to accomplish the desired appearance and protection quality. Submit to the Owner substantial evidence that the standard finish is compatible with the specified finish coat.

H. Wherever fabricated equipment is required to be blast cleaned, protect all motors, drives, bearings, gears, etc. from the entry of grit. Any equipment found to contain grit shall be promptly and thoroughly cleaned.

I. Use painting methods which will result in full coverage of joints, corner, edges and all exposed surfaces.

3.02 EVALUATION AND REPAIRS

A. Thickness Testing: Thickness of coatings and paints shall be tested with a non-destructive film thickness gauge. An instrument such as a Tooke Gauge should be used if a destructive tester is deemed necessary. Testing shall be accomplished in conformance to SSPC-PA2, "Measurement of Dry Paint Thickness with Magnetic Gauges."

B. Holiday Testing: Coating integrity of all interior coated surfaces shall be tested with an approved testing device. All pinholes shall be marked and repaired. No pinholes or other irregularities will be permitted in the final coating.

C. Inspection Devices: The Contractor will furnish, until final acceptance of coatings and paints, inspection devices in good working condition for detection of holidays and measurement of dry-film thickness. The Contractor shall also furnish U.S. Department of Commerce, National Bureau of Standards certified thickness calibration plates to test accuracy of thickness gauges. Dry film thickness gauges and holiday detectors shall be available at all times until final acceptance of application. Inspection devices shall be operated by or in the presence of the Owner with location and frequency basis determined by the Owner.

D. All deficiencies found in coatings and paints shall be repaired in accordance with the manufacturer's printed recommendations.

E. For field repairs of fusion bonded epoxy, the use of a liquid epoxy will be permitted, applied in one coat to provide a DFT of 16 mils. The liquid epoxy shall be compatible and from the same manufacturer of material for fusion bonded epoxy.

END OF SECTION

TECHNICAL PROVISIONS

SECTION 09920

FIELD PAINTING AND PROTECTIVE COATING

PART 1 - GENERAL

1.01 SCOPE OF WORK

A. Furnish all materials, labor, equipment and incidentals required and perform all the painting necessary to complete the Work in its entirety as specified herein.

B. It is the intent of this Section to paint all exposed structural and miscellaneous steel; mechanical equipment, pipe, fittings and valves; infill materials to match existing adjacent materials as approved; and all other work obviously required to be painted unless otherwise specified. Minor items not mentioned in the schedule of work shall be included in the work of this Section where they come within the general intent of this Section as stated herein.

C. This Section shall not apply to items which are to be petrolatum or petroleum wax tape coated as indicated in Section 09930.

D. All galvanized items shall be field painted unless otherwise specified or directed by the Owner.

1.02 RELATED WORK

A. Waterproofing is included in Section 07900.

B. Shop priming and surface preparation of equipment and piping are specified in Section 09910 and included in the respective Section with the item to be primed.

C. Petrolatum tape and petroleum wax tape coatings are included in Section 09930.

1.03 SUBMITTALS

A. Submit to the Engineer, in accordance with Section 01300, the following:

1. Color cards for initial color selections by the Owner.

2. Three sets of 8-inch by 8-inch samples, on ¼-inch hardboard, of all colors required for all types of paint if requested by the Owner. Include special colors as required. Resubmit until approved.

3. Product data for polyethylene wrap and adhesive tape.

4. Technical data sheet from primer or paint manufacturer which includes recommended applications, recommended coating thicknesses for application, recoat window, and other information required to properly apply the primer or paint.

5. Minimum dry film thickness of primers and paints.

1.04 REFERENCE STANDARDS

A. The Society for Protective Coatings (SSPC)

1. SSPC SP-1 - Surface Preparation Specification No. 1, Solvent Cleaning.

2. SSPC SP-2 - Surface Preparation Specification No. 2, Hand Tool Cleaning.

1.05 DEFINITIONS

A. Submerged exterior surfaces: Items subject to submersion, splash action, high humidity or within vaults. This excludes interior of welded steel pipes and fittings which are included in Section 02620.

B. Non-submerged surfaces: Items not subject to submersion, splash action, high humidity or within vaults.

C. Buried exterior surfaces: Items which are buried.

D. Submerged interior surfaces: Items which contain water.

E. Non-primed surfaces: Items provided by the manufacturer not requiring coatings.

1.06 WARRANTY

A. All coatings shall be provided with a 1 year warranty. The Contractor shall repair any defects in a manner acceptable to the Owner.

PART 2 - PRODUCTS

2.01 MATERIALS

A. All painting materials shall be by the Tnemec Company, Inc.; Valspar Co.; Dupont; DeVoe or equal unless otherwise specified. The painting schedule has been prepared on the basis of Tnemec products (unless otherwise noted) and Tnemec recommendations for application. No brand other than those named will be considered for approval unless the brand and type of paint proposed for each item in the following schedule, together with sufficient data substantiated by certified tests conducted at no expense to the Owner, are submitted to the Owner within 30 Calendar Days after execution of the Agreement to

demonstrate its equality to the paint(s) named. The type and number of tests performed shall be subject to the Owner's approval.

B. All painting materials shall be delivered in unbroken packages, bearing the manufacturer's brand and name. They shall be used without adulteration and mixed, thinned and applied in strict accordance with manufacturer's directions for the applicable materials and surfaces.

C. Shop priming shall be done with primers that are guaranteed by the manufacturer to be compatible with the finish paints to be used. Refer to Section 09910 for special primers.

D. No paint containing lead will be allowed. Oil shall be pure boiled linseed oil.

E. Work areas will be approved by the Owner for storage and mixing of all painting materials. Materials shall be in full compliance with the requirements of pertinent codes and fire regulations. Proper containers shall be provided outside of the buildings and used for painting wastes. No sanitary or storm sewers shall be used for this purpose.

F. Petrolatum and petroleum wax tape coatings system: Petrolatum and petroleum wax tape coatings system shall be in accordance with Section 09930.

G. All paint shall comply with local regulations regarding the release of volatile organic compounds (VOC's).

2.02 COLOR SELECTIONS

A. Final color and color shade selection shall be by the Owner. Contact the Owner for direction prior to submittal of colors for selection.

B. All valves and mechanical equipment to be painted shall be gray in color.

C. Interior structures to receive whitewash shall be white in color.

PART 3 - EXECUTION

3.01 PREPARATION OF SURFACES

A. All surfaces to be painted shall be prepared as specified herein and shall be dry and clean before painting.

B. All metal welds, imperfections, etc. shall be ground and sanded smooth. All pits and dents shall be filled and all imperfections shall be corrected so as to provide a smooth surface for painting. All rust, loose scale, oil, tar and asphalt bearing coatings, grease and dirt shall be removed by use of approved solvents, wire brushing, grinding or sanding.

C. All PVC pipe and other plastic matrix surfaces to be painted shall be lightly sanded and cleaned of residue before painting.

D. Aluminum, stainless steel and copper surfaces shall have all oxidation and foreign material removed before painting by SSPC SP-1, using an approved V.O.C. compliant method. When ordered, metal surfaces specified above shall be hand tool cleaned to SSPC SP-2 standards to provide a uniform 1 mil surface profile.

E. Where field welding of galvanized material is necessary, welds shall be wire brushed clean and immediately regalvanized in the field using galvanizing compound or coating. Materials shall comply with local regulations controlling use of volatile organic compounds.

F. Preparation for surfaces receiving petrolatum or petroleum wax tape coating system shall be in accordance with Section 09930.

3.02 PAINTING SCHEDULE

A. All colors will be selected by the Owner.

B. The following types of paints by Tnemec Co. have been used as a basis for the paint schedule:

1. Epoxoline (Series L69) - polyamidoamine cured epoxy
2. PotaPox (Series L140F) - polyamidoamine cured epoxy
3. Envirofill (No. 130-6601) - waterborne cementitious acrylic
4. Endura-Shield (Series 1081) - aliphatic acrylic WB polyurethane
5. Enviro-Pox (Series 287-Gloss) - high-build waterborne acrylic epoxy
6. Tnemec-Crete (Series 180) - acrylic texture coating
7. Masonry Filler (Series 218) - modified epoxy cement
8. Enduratone SG (Series 1029) - acrylic emulsion

C. The following surfaces shall have the types of paint and protective coating scheduled below.

1. Submerged Exterior Surfaces - Submerged ferrous metals and ferrous metals subject to submersion, splashing, high humidity, or within vaults as indicated to be painted in Section 09910 shall be lightly sanded or abraded before application of finish coats.

   1 coat Series L69 on properly prepared unprimed metal or touch-up (3.0-4.0 mils DFT)
   2 coats Series L140F (5.0 mils DFT, Total 10 mils DFT)

2. Exterior non-submerged ferrous metals.

   1 coat Series L69 on properly prepared unprimed metal or touch-up (3.0-4.0 mils DFT)
   1 coat Series L140F (4.0 mils DFT)

   1 coat minimum Series 1081 (3.0 mils DFT)

3. Interior non-submerged ferrous metals.

   1 coat Series L69 on properly prepared unprimed metal or touch-up (3.0-4.0 mils DFT)

   2 coats Series L140F (3.0 mils DFT, Total 6 mils DFT)

4. Buried exterior surfaces of ferrous metals, including valve bodies, meters, couplings, flanges, blind flanges, pipes and nuts and bolts.

   Petrolatum or petroleum wax tape coating in accordance with Section 09930. Defect coating free surfaces which are fusion bonded epoxy coated are not required to be wax taped.

5. Aboveground cabinets and vents:

   Primer: Series L140F 1 coat (5.0 mils DFT)
   Color/Intermediate Coat: Series 73 1 coat (5.0 mils DFT)
   Top Coat where Exposed to Environment: Series 76 1.coat (2.0 mils DFT)
   Top Coat where Not Exposed to Environment: Series 73 1 coat (3.0 mils DFT)

   Color similar to Dunn-Edwards Adobe

6. Galvanized metals excluding buried corrugated metal pipe.

   Interior:

   2 coats Series L140F (3.0 mils DFT, Total 6 mils DFT)

   Exterior:

   1 coat Series L140F (3.0 mils DFT), 1 coat Series 1081 (3.0 mils DFT)

7. Plastic piping and components.

   2 coats Series L140F (3.0 DFT, Total 6 mils DFT)

8. Below-grade vault and manway interior walls and ceilings.

   1 coat Series 218 modified epoxy masonry filler (cured 3 Calendar Days minimum)

9. Below grade vault exterior walls and deck shall be waterproofed in conformance with Section 07900.

3.03 WORKMANSHIP

A. General:

1. At the request of the Owner, samples of the finished work prepared in strict accordance with this Section shall be furnished and all painting shall be equal in quality to the approved samples. Finished areas shall be adequate for the purpose of determining the quality of workmanship. Experimentation with color tints shall be furnished to the satisfaction of the Owner where standard chart colors are not satisfactory.

2. Protection of furniture and other movable objects, equipment, fittings, concrete pads and foundations and accessories shall be provided throughout the painting operation. Canopies of lighting fixtures shall be loosened and removed from contact with surface, covered and protected and reset upon completion. Remove all electric plates, surface hardware, etc., before painting. Protect and replace when completed. Mask all machinery nameplates and all machined parts not receiving a paint finish. Dripped or spattered paint shall be promptly removed. Lay drop cloths in all areas where painting is being done to adequately protect flooring and other work from all damage during the operation and until the finished job is accepted.

3. On metal surfaces apply each coat of paint at the rate specified by the manufacturer to achieve the minimum dry mil thickness required. If material has thickened or must be diluted for application by spray gun, the coating shall be built up to the same film thickness achieved with undiluted material. One gallon of paint as originally furnished by the manufacturer shall not cover a greater area when applied by spray gun than when applied unthinned by brush. Deficiencies in film thickness shall be corrected by the application of an additional coat(s). On masonry, application rates will vary according to surface texture; however, in no case shall the manufacturer's stated coverage rate be exceeded. On porous surfaces, it shall be the painter's responsibility to achieve a protective and decorative finish either by decreasing the coverage rate or by applying additional coats of paint.

B. Field Priming:

1. All piping and other metals not shop primed and delivered to the field may be sent back to the shop for shop priming at the discretion of the Owner. Items allowed to be field primed shall receive the same surface preparation and prime coat per Section 09910.

2. Equipment which is specified to receive a baked-on enamel finish or other factory finish shall not be field painted unless the finish has been damaged in transit or during installation. Surfaces that have been shop painted and have been damaged or where the shop coat or coats of paint have deteriorated, shall be properly cleaned and retouched

before any successive painting is done on them in the field. All such field painting shall match as nearly as possible the original finish.

3. Equipment shipped with a protective shop painting coat or coats shall be touched up to the satisfaction of the Owner with primers as recommended by the manufacturer of the finish paint.

C. Field Painting:

1. All painting at the Site shall be designated as Field Painting and shall be under the direct and complete control of the Contractor and only skilled painters and specialists, where required, shall be used on the work.

2. All paint shall be at room temperature before applying, and no painting shall be done when the temperature is below 60 degrees F, in dust-laden air, when rain or snow is falling, or until all traces of moisture have completely disappeared from the surface to be painted.

3. Successive coats of paint shall be tinted so as to make each coat easily distinguishable from each other with the final undercoat tinted to the approximate shade of the finished coat.

4. Finish surfaces shall not show brush marks or other irregularities. Undercoats shall be thoroughly and uniformly sanded with the type of paper appropriate for the undercoats to remove defects and provide a smooth even surface. Top and bottom edges of doors shall be painted.

5. Painting shall be continuous and shall be accomplished in an orderly manner so as to facilitate inspection. Materials subject to weather shall be prime coated as quickly as possible. Surfaces of exposed members that will be inaccessible after erection shall be cleaned and painted before erection.

6. All painting shall be performed by approved methods with number of coats modified as required to obtain the total dry film thickness specified. Spray painting shall be performed specifically by methods submitted and as approved by the Engineer.

7. All surfaces to be painted as well as the atmosphere in which painting is to be done shall be kept warm and dry by heating and ventilation, if necessary, until each coat of paint has hardened. Heating and ventilation methods used shall not cause discoloration of the finish coat. Any defective paint shall be scraped off and repainted in accordance with the Owner's directions.

8. Before final acceptance of the Work, all damaged surfaces of paint shall be cleaned and repainted as directed by the Owner.

9. Only the aluminum work noted on the Drawings or in the Painting Schedule shall be field painted.

3.04 CLEANUP

A. At all times keep the premises free from accumulation of waste material and rubbish caused by employees or work. At the completion of the painting, remove all tools, scaffolding, surplus materials and all rubbish from and about the buildings and leave the work "broom clean" unless more exactly specified.

B. Upon completion, remove all paint where it has been spilled, splashed, or spattered on all surfaces, including floors, fixtures, equipment, furniture, concrete pads, concrete foundations, etc. leaving the work ready for inspection.

END OF SECTION

TECHNICAL PROVISIONS

SECTION 09930

PETROLATUM TAPE AND PETROLEUM WAX TAPE COATINGS

PART 1 - GENERAL

1.01 SCOPE OF WORK

A. Furnish all labor, materials and incidentals required and install petrolatum tape and petroleum wax tape as specified in the Contract Documents.

B. All buried and below ground ferrous materials excepting common access parts such as valve handwheels, manhole covers, buried valve turning nuts, ladders, moving parts, etc. shall receive tape coating system in accordance with this Section unless otherwise noted or material is mortar coated or concrete encased.

1.02 RELATED WORK

A. The work of the following Section applies to the work of this Section. Other Sections of the Specifications, not referenced below, shall also apply to the extent required for proper performance of this work.

1. Small valves and pipes are included in Section 02642.

2. Pipe appurtenances are included in Section 02644.

3. Surface preparation and shop painting and coating are included in Section 09910.

4. Field painting is included in Section 09920.

5. Equipment is included in Division 11.

1.03 SUBMITTALS

A. Submit to the Engineer in accordance with Section 01300 the following:

1. Detailed information for primer and tape system including name of manufacturer and supplier, physical properties, application method, thicknesses and MSDS.

B. If the material to receive tape coating under this section has a shop or field applied primer or other coating applied prior to application of tape primer, submit to the Engineer for approval a WRITTEN statement from the petrolatum tape or petroleum wax tape manufacturer or tape primer manufacturer that the applied coating is recommended and compatible with the tape primer to be used and will not affect the performance of the work

under this Section. Failure to submit this letter prior to application of tape primer may result in the requirement for removal of all coatings and reapplication of tape and any other associated work at no additional cost to the Owner.

1.04 REFERENCE STANDARDS

A. American Society for Testing and Materials (ASTM).

1. ASTM D70 – Standard Test Method for Density of Semi-Solid Bituminous Materials.

2. ASTM D92 – Standard Test Method for Flash and Fire Points by Cleveland Open Cup.

3. ASTM D127 – Standard Test Method for Drop Melting Point of Petroleum Wax, Including Petrolatum.

4. ASTM D149 – Standard Test Method for Dielectric Breakdown Voltage and Dielectric Strength of Solid Electrical Insulating Materials at Commercial Power Frequencies.

5. ASTM D937 – Standard Test Method for Cone Penetration of Petrolatum.

6. ASTM D1000 – Standard Test Method for Pressure-Sensitive Adhesive-Coated Tapes Used for Electrical and Electronic Applications.

7. ASTM E96 – Standard Test Methods for Water Vapor Transmission of Materials.

B. American Water Works Association (AWWA).

1. AWWA C217 – Petrolatum and Petroleum Wax Tape Coatings for the Exterior of Connections and Fittings for Steel Water Pipelines.

1.05 MARKING

A. Containers shall be plainly marked with the name of the manufacturer, type of material, batch or lot number, date of manufacture, and information as required by federal, state, or local laws.

1.06 PACKAGING, DELIVERY, HANDLING AND STORAGE

A. Packaging:

1. All primers and tape coatings shall be packaged in containers that ensure acceptance, safe delivery to their destination, and protection while in storage. All primers and tapes shall be stored in the original packaging until the time of use.

2. Individual sheet, pad, or roll of tape shall be packaged to prevent it from adhering to the packaging material or the container.

3. Multiple sheets, pads, or rolls shall be protected from adhering to other sheets, pads, or rolls of tape coating, the container, or to the packaging material itself using separators.

4. Primer shall be packaged in pails or other containers that comply with the applicable federal, state, or local regulations.

B. Delivery: Deliver materials to the Site in original, unopened packages.

C. Handling and Storage: Materials shall be handled, stored and shipped in accordance with manufacturer's recommendations and in a manner that causes no damage to materials.

PART 2 - PRODUCTS

2.01 MATERIALS

A. Coating System: The tape coating system shall be a petrolatum primer and a cold-applied petrolatum tape or a petroleum wax primer and a cold-applied petroleum wax tape. Petrolatum and petroleum wax tapes shall be protected by a protective wrap.

B. Primer: The primer shall be a compound of petrolatum or petroleum wax and may contain suitable inhibitors. The primer used shall be supplied by the tape manufacturer and shall conform to the requirements of AWWA C217. The primer shall protect the metal surface before application of the tape and promote adhesion of the tape to the surface.

C. Tape Coating: The tape coating shall be a saturant tape made from either petrolatum or petroleum wax and a noncellulosic synthetic fiber fabric. The fabric shall be encapsulated and coated on both sides with the petrolatum or petroleum wax. Inert materials may be added to improve applications, and thermal extenders may be added for temperature resistance. Physical properties of tape coating shall conform to the requirements of AWWA C217. Thickness of tape shall not be less than 40 mil.

D. Protective Wrap: Protective wrap shall be 20 mil thick minimum, polyvinyl chloride wrap or 40 mil thick tape, same as used for tape coating.

PART 3 - EXECUTION

3.01 INSTALLATION

A. Surface Preparation.

1. Bare Surfaces: Bare surfaces shall be free from dirt, loose rust, loose mill scale, loose coating, and other detrimental foreign matter. If moisture is present, wipe the surface free from moisture. Welds shall be cleaned of all welding slag, spatter, and scale and shall be allowed to cool before the coating is applied. Sharp edges or burrs that could puncture or cut the tape shall be removed by grinding or filing.

2. Primed Surfaces: Primed surfaces shall be prepared in accordance with the petrolatum or petroleum wax tape manufacturer in addition to the surface preparation as specified in Paragraph 3.01.A.1.

3. Surface Cleaning: Unless otherwise specified, all metal surfaces shall be blast-cleaned to achieve a surface preparation equivalent to SSPC-SP 6/NACE No. 3. Surfaces that have been blast-cleaned in a shop or that have been shop-coated or that are in good condition before shipment to a field location may be field-cleaned by wire brushing to achieve an SSPC-SP 2 surface preparation immediately before applying the primer and tape. If oil or grease is present, a solvent conforming to SSPC-SP 1 shall be used before wire brushing.

B. Primer Application: Primer shall be applied by brush, hand, glove, or roller. A uniform and continuous coat shall be firmly pressed onto the surface. The film thickness of the primer shall be at least 3 mils or thicker as recommended by the manufacturer. Drying or curing of the primer will not be required unless otherwise required by the manufacturer. Application of tape shall begin immediately after the primer is applied.

C. Materials to receive petrolatum tape coating which are not shipped to the field unprimed shall have the primer removed or the Contractor shall obtain a written document from the tape coating manufacturer which guarantees compatibility between the shop applied primer and the tape coating primer.

D. Materials which have been fusion bonded epoxy coated and that fusion bonded epoxy is damaged, shall be petrolatum tape coated. The extent of the petrolatum tape coating shall be a minimum of 3 inches beyond the damaged portion in all directions.

E. Tape Coating and Wrapping: The tape coating system shall be applied as recommended by the manufacturer and shall not exhibit defects, such as folds and bridging. The total thickness applied shall conform to the purchaser's specifications, but shall not be less than 40 mil using a minimum overlap of 1 inch.

F. Protective Wrap Installation: The protective wrap shall be applied over the tape coating. The protective wrap shall be installed and secured in place as recommended by the manufacturer and shall not exhibit defects, such as folds and bridging. The total thickness applied shall conform to Paragraph 2.01 D using a minimum overlap of 1 inch.

G. Coating Protection:

1. Precautions to prevent damage to the tape coating shall be used at all times during construction. No metal tools or heavy objects shall come into contact with the finished tape coating. Walking on the coated component shall be avoided to prevent damage to the tape coating. Any damage to the tape coating from any cause during installation shall be repaired.

2. An 18-inch wide strip of heat-resistant material shall be draped over the coated component on each side of the weld area during welding to avoid damage to the coating by hot weld spatter. No welding ground shall be made on the coated part of the pipe, fitting or valve, unless otherwise shown.

3. Trenches shall be backfilled in a way that prevents abrasion or other damage to the tape coating.

4. Rodding with metal rods or other metal tools that could come into contact with and damage the tape coating will not be permitted for bedding and backfill.

3.02 INSPECTION

A. Installation of primer shall not commence prior to completion of inspection of surfaces by the Owner.

B. Backfill shall be placed around the exterior of the tape coated pipe, fittings and valves only after the final inspection has been made and the exterior coating has been approved.

C. If tape coating system does not meet the requirement of these specifications, it will be rejected. The damaged coating shall be repaired as specified herein.

3.03 REPAIR

A. All damage, holidays, or unsatisfactory laps shall be repaired by removing any frayed or damaged tape and any contaminants at the affected area. Primer shall be applied to the area, followed by the application of additional tape coating, to completely cover the area. Each repair shall begin and end on sound, undamaged tape coating.

END OF SECTION

This page intentionally left blank.

TECHNICAL PROVISIONS

SECTION 11262

BUTTERFLY VALVES

PART 1 - GENERAL

1.01 SUMMARY

A. Section includes materials, fabrication, testing and delivery of butterfly valves and actuators.

1.02 RELATED WORK

A. Plastic pipe and fittings are included in Section 02625.

B. Small valves and pipes are included in Section 02642.

C. Surface preparation and shop painting and coating are located in Section 09910.

D. Field Painting is included in Section 09920.

E. Tape Coating is included in Section 09930.

1.03 SUBMITTALS

A. Shop Drawings:

1. Submit data to show conformance with the Specification requirements.

2. Submit samples of materials where required by the Technical Specifications.

3. Submit certified test reports as required herein and by the referenced standard specifications.

4. Submit certified drawings showing all important details of construction and dimensions, including positions of actuator and lifting lugs, the total weight of each item, and complete bill of materials.

5. For each size flange, submit number of bolts and diameter of bolt circle.

6. Submit coating systems information and data.

7. Laying length of valve in inches.
8. Minimum valve body thickness in inches.

9. Number of handwheel turns for 90 degrees of disc travel.

10. Calculated seating torque in foot-pounds.

11. Calculated maximum dynamic torque to open valve under maximum flow conditions in foot-pounds.

12. Actuator rated output torque with 40 foot-pounds of input torque in foot-pounds.

13. Actuator rated output torque with 80 foot-pounds of input torque in foot-pounds.

B. Certificates

1. Prior to delivery, three certified copies of test reports shall be submitted to the Engineer for approval. Acceptance or rejection of each item for delivery shall be based upon the results of these tests and no valve shall be released for shipment except after approval by the Engineer of test reports.

C. Manuals: Furnish manufacturer's installation and operation manuals, bulletins, and spare parts lists for the following items:

1. All valves.

1.04 QUALITY ASSURANCE

A. Materials and equipment furnished under this Section shall be of manufacturers who have been regularly engaged in the design and manufacture of the materials and equipment for a period of at least 5 years. Demonstrate to the satisfaction of the Engineer that the quality is equal to the materials and equipment made by the manufacturers specifically named herein, if an alternate manufacturer is proposed.

B. Factory Quality Control: The manufacturer shall test all products as noted herein and by the reference specifications.

C. Testing shall be in accordance with Paragraph 3.04 of this Section.

1.05 APPURTENANCES

A. Furnish and install all necessary guides, actuator supports and all other appurtenant items specified or required for the proper installation and operation of the valves.

1.06 REFERENCE STANDARDS

A. American Society for Testing and Materials (ASTM):

1. ASTM A47 - Specification for Ferritic Malleable Iron Castings.

2. ASTM A48 - Specification for Gray Iron Castings.

3. ASTM A126 - Specification for Gray Iron Castings for Valves, Flanges, and Pipe Fittings.

4. ASTM A276 - Specification for Stainless Steel Bars and Shapes.

5. ASTM A436 - Specification for Austenitic Gray Iron Castings.

6. ASTM A536 - Specification for Ductile Iron Castings.

7. ASTM B584 - Specification for Copper Alloy Sand Castings for General Applications.

B. American Water Works Association (AWWA):

1. AWWA C504 - Standard for Rubber-Seated Butterfly Valves.

2. AWWA C550 - Standard for Protective Epoxy Interior Coatings for Valves and Hydrants.

C. Society for Protective Coatings (SSPC):

1. SSPC-SP-6-Surface Preparation Specification No. 6 Commercial Blast Cleaning.

2. SSPC-SP-10-Surface Preparation Specification No. 10 Near White Blast Cleaning.

D. American National Standards Institute (ANSI)

1. ANSI B16.1 -Cast Iron Pipe Flanges and Flanged Fittings.

2. ANSI B16.5 - Pipe Flanges and Flanged Fittings.

E. Underwriters Laboratories (UL)

PART 2 - PRODUCTS

2.01 GENERAL

A. Valve sizes are nominal inside diameter unless otherwise noted.

B. All materials delivered to the Site shall be new, free from defects, and marked to identify the material, class, and other appropriate data.

C. Acceptance of materials shall be subject to strength and quality testing in addition to inspection of the completed product.

1. Butterfly valves shall be flanged, bubble tight closing, rubber-seated and designed for water-and-air-tight shut off under the operating conditions specified hereinafter. Valves shall have manual operators with handwheels, 2-inch operating nuts or electric operators as shown on the Drawings. The manufacturer shall have manufactured rubber-seated butterfly valves for comparable size and working pressures for a period of at least ten years.

2. Butterfly valves shall comply with AWWA C504 Standard for Class 150B short body valves, except as specifically modified or supplemented herein. The manufacturer shall provide a model of their butterfly valve that will be bubble tight at 150 psi differential pressure. The manufacturer shall certify in writing that the valve provided will shut off bubble tight at 150 psi after it is installed in the pipeline.

2.02 VALVES AND ACCESSORIES

A. Design and Construction

1. Butterfly valves shall consist essentially of a body, rubber seat, a disc, a valve shaft, and an operating mechanism. Valve seats for valves 24 inches in diameter and smaller may be bonded.

2. The minimum diameter within the water passage shall be within 1.5 inches of the nominal diameter. The valve disc shall rotate through an angle of 90 degrees from the fully opened to the fully closed position and the seat shall be of such design as to allow the valve disc to seat at an angle normal to the axis of the pipe when the disc is in the fully closed position. Adjustable mechanical stops shall be provided to prevent over-travel of the valve disc in both the open and closed positions. These stops shall be capable of absorbing full operating torque with a minimum design safety factor of five.

B. Body and Flanges

1. The valve body shall be cast iron or ductile iron for valve sizes 20-inches and smaller and cast iron for valves over 20-inches. Flanges and hubs for shaft bearing housings shall be integrally cast with the valve body. The valve body shall be accurately cast and machined such that the valve seat and seat retention members, if any, shall be secured from axial movement.

C. Disc

1. The disc shall be of one-piece cast design of stainless alloy, cast iron, ductile iron, or cast iron with a Ni-Chrome or Type 316 stainless steel seating edge. The disc may be furnished with the rubber seat secured to the edge of the disc. Metal disc edges shall be machined with rounded corners and shall be polished to a smooth finish.

D. Shaft

1. The shaft shall be fabricated of Type 304 or 316 stainless steel. The shaft shall be securely attached to the valve disc such that the disc cannot move when the position of the shaft is fixed. This shall be accomplished by a non-circular design of the cross section of the shaft or mechanically by means of suitable pressed and crowned pins or rivets extending through the disc into reamed holes in the shaft. Pins or rivets shall be of stainless steel.

E. Seat

1. The valve seat shall be of a natural gum rubber or Hycar (Buna-N compound), of suitable hardness, precisely molded to finished dimensions.

2. The valve seat shall be attached to the valve body. The valve seat shall be either bonded into a machined groove or securely clamped in place by set retention members, or other equivalent retention device, in such a manner as to prevent leakage of water under the seats and to securely hold the seat in position during opening and closing of the valve disc. The seat retention members, where utilized, shall be of stainless alloy cast iron or of stainless steel and shall be securely fastened to the body with stainless steel fasteners. When all the seat retention members are in place, the finished edges shall fit closely and the surface shall be smooth with all fastenings set flush in the water passage so as to offer the least resistance possible to the flow of water through the valve.

F. General Requirements for Valves and Actuators:

1. All valves shall be the suitable for mounting in any position.

2. All valves shall be furnished with position indicators and with motor actuators, handwheels, or other suitable operating devices as specified in the Contract Documents.

3. Valves shall be delivered with actuators, including handwheels where specified, installed on the valves. All valve openings shall be weather-proofed with a plastic wrap (10 mil min. thickness) or plywood (3/8" min. thickness) covering to prevent foreign material from entering the water passages.

G. Butterfly Valves:

1. Standard: AWWA C504, except as modified herein.

2. Type: Short body flanged, except mechanical grooved coupling where shown on the Drawings.

3. Pressure Class:

   a. Valves shall be pressure rated for 150 psi minimum or higher as shown on the Drawings.

   b. Valves shall be bubble-tight at rated pressure in either direction.

4. Materials:

   General:

   a. Cast iron shall be close grained and conform to ASTM A126, Class B, or ASTM A48, Class 40.

   b. Ductile iron shall conform to ASTM A536 Grade 65-45-12.

   c. Stainless alloy cast iron shall conform to ASTM A436, Type 1.

   d. Stainless steel shall conform to ASTM A276, Type 304 or Type 316.

   e. Bronze shall conform to ASTM B584, but bronze that may be in contact with water shall not contain more than 5 percent zinc nor more than 11 percent aluminum.

5. Construction:

   a. Seats: Applied to body. Cartridge type seats with retaining rings are not acceptable.

   b. Disk to Shaft Connection: Stainless steel pins or torque plug.
   c. Shaft: Scribe both ends of the shaft to indicate valve position.

d. Valve Diameter Limitation: Internal diameter of valve at the throat shall be no less than the nominal diameter of the valve less 1-1/2 inches.

e. Provide adjustable mechanical stops to prevent over-travel of the valve disc in both the open and closed positions. Stops shall be capable of absorbing full operating torque with a minimum design safety factor of five.

6. Operating Conditions:

a. Valves shall be suitable for frequent operation in a throttled position for controlling flow of clean, cold water, as well as for operation after long periods of idleness in either the open or closed position.

b. Operating mechanisms shall positively retain the disc in all increments of movement from full open to full closed.

c. Valves shall be designed for installation in open air, in underground vaults which may be flooded occasionally under adverse conditions, or for buried service.

d. Class 150 valves shall be designed to withstand an unbalanced pressure of 150 psig minimum.

e. The valve and actuators shall be suitable for a flow of 16 feet per second.

7. Finish:

a. Interior and exterior coatings are specified in Sections 09910, 09920 and 09930.

8. Flanges:

a. Dimensions and drilling in accordance with AWWA C207.

b. Valves shall be flat-faced and either back-faced or spot-faced, suitable for use with full-faced gaskets. Valves that are to be equipped with insulated flange kits shall not be spot-faced and must be back-faced.

c. Faces shall have a serrated finish of approximately 32 serrations per inch and approximately 1/64-inch deep. Serrations may be either spiral or concentric.

9. Lifting Lugs: Incorporate four lifting lugs either integrally cast, or permanently affixed to the valve body or the flange, respectively. Orientation of the lifting lugs shall be appropriate for the installation orientation of the valve.

10. Shaft Seals and Packing:

a. Shaft seals, when used, shall be rubber and of the O-ring type. Shaft seals may be either circular or hexagonal shape.

b. Packing shall be either an O-ring type of rubber packing, a U-Cup seal packing or self-adjusting Chevron type packing.

11. Manufacturer: DeZurik; K-Flo; Pratt; or equal. Valves must be manufactured in the U.S.

H. Actuators:

1. General:

a. The operating mechanism shall be totally enclosed, sturdy in construction, shall impart rotary movement to the valve shaft, and shall positively retain the disc in a definite position corresponding to all positions of the actuating medium. The design of the operating mechanism shall be such that the packing on the main shaft can be replaced without disassembling the mechanism, while the valve is in the line under full operating pressure and shall be constructed so that it can be removed from the valve as a unit without removing the valve proper from the line. In lieu of the above requirements, the operating mechanism may be such that the shaft can be completely repacked under pressure, by two men and regular tools within a 3-hour period including any time required for disassembling and reassembling the operating mechanism or any portions thereof.

b. Provide valve position indicators on all actuators.

c. Output torque rating shall be verified by a certified proof of design test in accordance with AWWA C504 Section 3.8.5.8 and 3.8.5.9. The proof of design test shall verify that the actuator is capable of twice the rated torque which is required to operate under the conditions specified in Paragraph 2.02.G.6 above.

d. For buried installation, provide extension stem to reach the ground surface as shown on the Drawings, and with a ground level position indicator. The ground level position indicator shall be manufactured of corrosion resistant material with gears sealed in watertight enclosure. The ground level position indicator shall be as manufactured by Dynatorque model no. GPI-S or an approved equal.

e. Unless indicated otherwise on the Drawings, all valves installed in horizontal runs of pipe having centerline elevations 3 feet 6 inches or less above the finished floor shall have their operating stems vertical. Valves installed in horizontal runs of piping having centerline elevations greater than 3 feet 6 inches above the finished floor shall be installed with their operating stems horizontal. If adjacent piping prohibits this, the stems and operating handwheel shall be installed above the valve horizontal centerline as close to horizontal as possible. Valves installed in vertical runs of pipe shall have their operating

stems oriented to facilitate the most practicable operation, as reviewed by the Engineer.

2. Manual Valve Actuator:

   a. Handwheel Type: Actuators shall have all operating parts enclosed and shall be grease packed and weatherproof. Actuators shall open the valves with a counter clockwise rotation. Cover bolts shall be Everdur or stainless steel. The rated maximum output torque of each operator shall be greater than or equal to twice that required to seat or unseat the disc against full unbalanced pressure equal to the design pressure and that required to operate the valves in any position with velocities as specified in "Operating Conditions" herein. Actuators shall be designed to produce the specified torque with a maximum pull of 80 lbs. on the handwheel.

   b. Operating Nut Type: Actuators shall be provided with standard AWWA 2-inch operating nuts, with a required input force not to exceed 150 ft.-lbs. on the nut.

   c. Manufacturers: With the exception of the valve manufacturer's standard link and lever components, subject to the Engineer's approval, all manual operating mechanisms, including all secondary torque units, shall be the product of Limitorque; Auma; EIM; Rotork; or equal.

3. Manual operators for valves in open air and vault service shall be provided with a handwheel and a position indicator. Operators shall have all operating parts enclosed and shall be grease packed and weatherproof. Operators shall open the valves with a counter clockwise rotation. Cover bolts shall be Everdur or stainless steel. The rated maximum output torque of each operator shall be greater than or equal to twice that required to seat or unseat the disc against full unbalanced pressure equal to the design pressure and that required to operate the valves in any position with velocities as specified in Operating Conditions herein. Operators shall be designed to produce the specified torque with a maximum pull of 80 lbs. on the handwheel. Operators in buried service shall be provided with 2-inch operating nuts, with a required input force not to exceed 150 ft.-lbs. on the nut.

2.03 PAINTING AND COATING VALVES AND APPURTENANCES

A. All coatings used on wetted surfaces shall be suitable for water service.

B. Wetted interior surfaces of valves shall be coated with epoxy resin coating. Epoxy resin coating shall be in conformance with Sections 09910 herein. The pipe connection openings shall be capped to prevent the entry of foreign matter prior to installation.

C. Exposed valves and appurtenances shall be coated with epoxy coating in conformance with Sections 09910 and 09920 herein.

D. Buried valves and appurtenances shall be coated with epoxy coating in conformance with Section 09910 and field wrapped with tape coating in conformance with Section 09930 herein.

E. All gears, bearing surfaces and other surfaces not to be painted shall be given a heavy coat of grease or other suitable rust resistant coating unless otherwise specified herein. This coating shall be maintained as required to prevent corrosion during any period of storage and installation and shall be satisfactory to the Owner through the time of final acceptance.

PART 3 - EXECUTION

3.01 PAINTING AND PROTECTIVE COATING

A. All inside ferrous surfaces, except stainless alloys, in the water passages of valves shall be coated with an epoxy resin coating in accordance with the section entitled Section 09910. Exterior protective coating material and application shall also comply with the Sections 09910 and 09920 of these Specifications.

3.02 BURIED VALVES INSTALLATION

A. Buried valves and boxes shall be installed in accordance with manufacturer's recommendations in conformance to AWWA C504 except as specified herein. Valves shall be set with the operating stem vertically aligned in the center. Valves shall be set on a concrete foundation and supported by tamping sand at the sides of the valve. Care shall be taken in handling the valves to prevent damage and ensure proper installation. Where applicable, all valves as furnished shall be marked to correspond with the designation on the Drawings. Care shall be taken to install valves properly with respect to direction of flow where applicable.

B. Valve boxes shall be installed vertically, centered over the operating nut, and the elevation of the top shall be adjusted to conform with the finished surface of roadway or other surface at the completion of the contract. Boxes shall be adequately supported during backfilling to maintain vertical alignment.

3.03 EXPOSED VALVE INSTALLATION

A. Exposed valves and specials shall be installed true and plumb as indicated. Coordinate operator locations as indicated. Provide pipe supports at piping locations as indicated and adjust to provide firm and substantial support throughout the piping system.

B. Provide valve drains and appurtenances as indicated and as required.

3.04 FACTORY TESTING

A. Butterfly valves, including actuators, shall be factory tested, in the presence of the Owner’s Materials Inspector, in accordance with the requirements of AWWA C504.

Additionally, all butterfly valves shall be hydrostatically tested per AWWA C504, except leakage testing is modified to be in both directions. The tests shall be conducted at the place of manufacture or assembly, or other testing facility normally used by the manufacturer. Any sign of leak during the leakage test, or hydrostatic test, or failure of the performance test, or the protective coating test shall be grounds for rejecting the valve. Submit certified test results for tests specified in AWWA C504 Sections 3.8 and 5.2.

B. Testing of all valves to be inspected shall be performed over consecutive working days not exceeding 3 Working Days. No valve shall be delivered until the Owner has received and approved the certified copies of the test report, and until the Owner's Materials Inspector has witnessed and approved the modified hydrostatic test. Contractor shall give Owner ten (10) Working Days' advance notice of test date period. Costs and other requirements for testing are included in Special Conditions Section 1-37.

C. Leakage test pressure of valves shall be 150 psi for pressure class 150 valves.

END OF SECTION

This page intentionally left blank.

TECHNICAL PROVISIONS

SECTION 11264

PLUG VALVES

PART 1 - GENERAL

1.01 SCOPE OF WORK

A. Furnish all labor, materials, equipment, and incidentals required and install plug valves and appurtenances, complete as shown on the Drawings and as specified herein.

1.02 RELATED WORK

A. Small Valves and Pipes are included in Section 02642.

B. Pipeline Testing is included in Section 02660.

C. Surface Preparation and Shop Painting and Coating are located in Section 09910.

D. Field Painting and Protective Coating are included in Section 09920.

1.03 SUBMITTALS

A. Submit to the Engineer, in accordance with Section 01300, a list of materials to be furnished, equipment data and details, instruction manuals, the names of the suppliers, the date of delivery of materials on the job site, and additional information as specified herein.

B. Submit to the Engineer, certified test results for both the valve shell and seat to the minimum working pressure of the valve.

1.04 REFERENCE STANDARDS

A. American National Standards Institute (ANSI)

1. ANSI B16.1 - Cast Iron Pipe Flanges and Flanged Fittings

2. ANSI B16.5 - Pipe Flanges and Flanged Fittings

B. American Society for Testing and Materials (ASTM)

1. ASTM A48 - Specification for Gray Iron Castings

2. ASTM A126 - Specification for Gray Iron Castings for Valves, Flanges, and Pipe Fittings

3. ASTM A436 - Specification for Austenitic Gray Iron Castings

4. ASTM A536 - Specification for Ductile Iron Castings

B. Manufacturing Standardization Society of the Valve and Fittings Industry, Inc. (MSS)

1. MSS SP-78 - Gray Iron Plug Valves Flanged and Threaded Ends

C. Underwriters Laboratories (UL)

PART 2 - PRODUCTS

2.01 MATERIALS

A. Plug Valves

1. General:

a. Plug valves shall be of the tapered plug venturi pattern type, 1/4 turn, lubricated, serviceable (able to be repacked) under full line pressure and capable of sealing in both directions at the rated pressure. The plug shall be completely out of the flow path when open. Plug valves shall be Figure 1169 as manufactured by Nordstrom or approved equivalent.

b. All plug valves shall have a minimum port area of 40 percent.

c. Valves shall be rated for a minimum working pressure of 200 psi.

d. All plug valves under this Paragraph shall be hydrostatically tested in accordance with MSS SP-78, except as modified herein.

e. At the above rated minimum working pressures, the valves shall be certified by the manufacturer as permitting zero leakage for a period of at least one hour with pressure applied in either direction.

f. At the direction of the Owner, the valve manufacturer may be requested to perform a valve seat leakage test, witnessed by the Owner to prove compliance with this Section.

2. Valve Bodies: Valve bodies shall be of cast iron, 30,000 psi tensile strength, ASTM A126, Grade B, or of ductile iron, ASTM A536 and of the top entry, bolted bonnet

design, cast with integral flanges conforming to the connecting piping. All exposed bolts, nuts and washers shall be zinc or cadmium-plated, except for buried or submerged valves, which shall have Type 316 stainless steel hardware.

3. Valve Plug:

   a. The valve plug shall be cast iron ASTM A126, Grade B, or ductile iron, ASTM A536, Grade 65-45-12.

   b. The plug shall be one piece.

4. The operator shaft shall have easily replaceable seals, which shall be externally adjustable and repackable without removing the bonnet from the valve, or shall have self-adjusting packing.

5. Valve Seat:

   a. The seating design shall be resilient or metal and of the continuous interface type having consistent opening and closing torques and shall be non-jamming in the closed position. Screw-in seats shall not be acceptable.

6. Manual Actuators: Actuators shall be of the worm gear type and clearly indicate valve position and an adjustable stop shall be provided. Hardware on actuators shall be of the same materials as the valves. Handwheels shall be provided for plug valves not buried and a 2-inch standard operating nut supplied on valves which are direct buried.

7. Direction of Flow: Plug valves shall be installed so that the direction of flow through the valve and the shaft orientation is in accordance with the manufacturer's recommendations.

8. Flanges: Flanges shall be flat-faced with serrated finish (32 serrations per inch, 1/64-inch deep, spiral or concentric) and shall be back-faced or spot-faced at bolt holes.

2.02 SHOP PAINTING VALVES AND APPURTENANCES

A. Shop painting and coating of valves is specified in Section 09910.

PART 3 - EXECUTION

3.01 EXPOSED VALVE INSTALLATION

A. Exposed valves and specials shall be installed true and plumb as indicated. Coordinate operator locations as indicated. Provide pipe supports at piping locations as indicated and adjust to provide firm and substantial support throughout the piping system.

B. Provide valve drains and appurtenances as indicated and as required.

3.02 TESTING

A. Valves shall be tested for proper operation including handwheel and gears. Water tightness of each valve shall be checked following pressurization of the pipeline to the test pressure for leak testing and prior to the start of the leak test. Operation shall be satisfactory to the Owner in all respects.

B. Valves shall be subjected to a hydrostatic shell test pressure equal to at least 2 times the pressure corresponding to the 150°F pressure rating. The test duration shall be 30 seconds for sizes 2 inch through 8 inch, and 60 seconds for sizes 10 inch through 18 inch. Valves shall be in the fully open position, with both ends sealed with no leakage allowed.

C. After being subjected to the shell test, valves shall be subjected to a hydrostatic seat test pressure equal to at least 1.1 times the pressure corresponding to the 150°F pressure rating. The test duration shall be 30 seconds for sizes 2 inch through 8 inch, and 60 seconds for sizes 10 inch through 18 inch. No visible leakage is permitted.

END OF SECTION

TECHNICAL PROVISIONS

SECTION 13510

PIPE DETECTION SYSTEM

PART 1 - GENERAL

1.01 SCOPE OF WORK

A. Furnish all labor, materials, equipment and incidentals required and install the pipe detection system on non-metallic pipes.

1.02 RELATED WORK

A. Earthwork is included in Section 02200.

B. Trench, backfill and compaction are included in Section 02220.

C. Large Diameter PVC Pipe and Fittings are included in Section 02620.

D. HDPE Pipe and Fittings are included in Section 02623.

E. Small Diameter PVC Pipe and Fittings are included in Section 02625.

1.03 SUBMITTALS

A. Submit to the Engineer, in accordance with Section 01300, manufacturer's detailed information on products supplied which includes, but is not limited to, model number, dimensions, composition, special installation instructions, inscriptions/printline color, etc.

PART 2 - PRODUCTS

2.01 MATERIAL

A. Warning Tape – Warning tape shall be a non-detectable plastic tape consisting of high visibility, purple colored, and black lettered, continuously printed, inert fiber reinforced polyethylene for direct burial service. Printing on the tape shall be similar to "Caution: Buried Water Line Below" and as modified for the type of pipeline being identified. The thickness of the tape shall be a minimum of 4.0 mils with a width of 6 inches, Polyethylene Underground Warning Tape, by Seton Identification Products or an approved equivalent.

B. Tracer Wire – Tracer wire shall be No. 8 gauge solid copper wire housed within a blue polyethylene insulation material suitable for buried service. Wire shall be Kris-Tech Wire Company, Tracer Wire or an approved equivalent. Tracer wire shall be secured to pipe

with standard PVC tape. Each tracer wire run shall be run with two wires and additionally as shown on the Drawings.

C. Ground – Tracer wire ground shall be of the direct bury sacrificial anode type. Size and placement shall be as shown on the Drawings.

D. PVC Tape – PVC tape shall be of the kind which will adhere to the PVC or HDPE pipe during installation and backfill operations. Minimum width of tape is 1 inch.

PART 3 - EXECUTION

3.01 WARNING TAPE

A. Care shall be taken to ensure that the warning tape, when installed and during backfill, remains intact and above the centerline of the pipe. Additional protection of the tracer wires may be required during construction depending on the Contractor's method of backfill. Any such additional protection required shall be at no additional cost to the Owner.

B. Warning tape shall be installed over all non-metallic water and drainage pipes.

3.02 TRACER WIRE AND TERMINATION BOX

A. Tracer wire termination box shall be installed on a post at locations described in and shown on the Drawings. All holes shall be sealed to prevent the intrusion of water into the box.

B. Tracer wires shall be installed carefully to ensure that there are no kinks or breaks in the wire, no damage to the polyethylene jacket and that it remains securely attached to the top of the pipeline.

C. The jacket of the tracer wire shall be kept watertight over its entire buried length. Splices in the tracer wire, where required, shall also be kept watertight.

D. Splices shall incorporate the use of a mechanical crimp connection with a butt sleeve. The completed crimped sleeve assembly shall be covered with a mastic electrical splicing tape such as Scotch 23 extending a minimum of 2 inches back from the stripped portion of the wire. In "T" connections, the mastic shall be wrapped in a crossover pattern. Splices shall be finished with a final overwrap with electrical tape and a waterproof heat-shrink sleeve extending up the wire 1 inch beyond the mastic tape.

E. All tracer wire shall be tested for electrical continuity between terminal stations prior to final paving. Any detected wire breaks, improper grounding, or any other such installation faults shall be located and be repaired by the Contractor at no additional cost to the Owner.

F. Tracer wire system shall be installed over all main line pipeline, blow-off piping, and vent piping. All tracer wires, whether shown on the Plans or not, shall be run in pairs (two wires parallel to each other) and terminated similarly for each tracer wire system run.

END OF SECTION

This page intentionally left blank.

TECHNICAL PROVISIONS

SECTION 13520

TEMPORARY TRAFFIC CONTROL

PART 1 - GENERAL

1.01 SCOPE OF WORK

A. The Contractor shall provide design of temporary traffic signals and connections and flaggers, signs, delineators, striping, barriers and other traffic control devices necessary to perform all temporary traffic control for the project as specified in the Contract Documents. The Contractor, shall erect and maintain all construction signs, warning signs, detour signs, and other traffic control devices necessary to warn and protect the public at all times from injury or damage as a result of the Contractor's operations which may occur on highways, roads, or streets. No work shall be done on or adjacent to the roadway until all necessary temporary traffic control signs and devices are in place.

B. Flaggers, signs, barriers and other traffic control devices shall be used for the safety of the public, the Contractor's employees, and the Owner's personnel and to facilitate the movement of the traveling public.

1.02 REFERENCE SPECIFICATIONS, CODES AND STANDARDS

A. The latest edition of the publications listed below form a part of this Specification to the extent referenced. The publications are referred to by the basic designations only.

1. State of California Department of Transportation Standard Plans and Standard Specifications.

2. California Manual of Uniform Traffic Control Devices (California MUTCD).

3. Manual of Temporary Traffic Controls for Construction and Maintenance Work Zones (condensed version of 1.02.A.1 listed above).

1.03 RELATED WORK

A. Temporary Construction Facilities are included in Section 01510.

B. Clearing and Grubbing are included in Section 02150.

B. Traffic control photograph requirements are included in Section 02990.

C. Experience of the traffic control subcontractor is included in the Notice Inviting Bids N-9.

D. Additional traffic control requirements are included in Special Conditions 1-21.

1.04 SUBMITTALS

A. Submit to the Engineer, in accordance with Section 01300, a list of materials to be furnished, the names of the suppliers, the date of delivery of materials to the Site, and additional information as specified herein.

B. Catalog sheets for markers, delineators, barricades, temporary and permanent traffic lines, sand filled temporary crash cushions, etc. shall be submitted with the required detail data to substantiate that each item meets the requirements of the Contract Documents. The Contractor shall state in his transmittal all exceptions taken to the Contract Documents.

C. Electrical and control plan for modifying existing and connecting temporary traffic control signals to existing control system. This includes both intersection traffic signals and railroad signals. Submittals must be received by the Engineer a minimum 30 Calendar Days prior to required usage. Approval from initial submittal may be longer than 30 Calendar Days if multiple submittal reviews are required. Each signalized intersection requiring modification shall be submitted separately.

D. Names and qualifications of the appointed Traffic Control Manager (TCM). Qualifications must demonstrate an individual's ability to perform the task assigned. The TCM must have a minimum of 5 years recent and continuous field experience performing the duties, at a minimum, indicated in this section.

E. The cellular telephone number(s) of the flagperson(s) in accordance with Section 01510.

PART 2 - PRODUCTS

2.01 MATERIALS

A. All traffic control such as markers, delineators, barricades, temporary and permanent traffic lines, signs, etc. shall be in accordance with the California MUTCD and Caltrans Standard Plans and Specifications. Crash cushions shall additionally be specifically approved by Caltrans.

B. Steel plates, where allowed in the Contract Documents, shall be supplied and designed to withstand H-20 traffic loading over the excavation area. Top surface of steel plates which are subject to traffic shall receive a skid-resistant coating which passes the California Test Method 342, such as SkidGuard as manufactured by Carbonyte or an approved equivalent.

C. All materials shall be new or used in good working order. Materials which are determined to be unsatisfactory by the Owner or agency having jurisdiction shall be removed from the Site.

D. Temporary pavement markers shall be of the plastic peel-and-stick variety, yellow in color, reflective on both sides, and have a strong enough adhesive to withstand repeated encounters with vehicle tires. Removable covers may be used if staining of the temporary pavement markers from vehicular traffic will cause them to lose their reflective properties.

PART 3 - EXECUTION

3.01 GENERAL

A. The Contractor shall be responsible for providing adequate flaggers, signs, delineators, striping, and other traffic control devices for the protection of the Work and the public at all times regardless of whether or not the flaggers, signs, delineators, striping, and other traffic control devices are ordered by the Owner, shown on the Drawings, or paid for by the Owner. The Contractor shall be liable for injuries and damages to persons and property suffered by reason of the Contractor's operations or any negligence in connection therewith. Necessary traffic control devices shall be provided by Contractor to avoid ingress and egress of traffic from non-designated areas within the construction zone.

B. The Contractor or his independent third-party traffic control company shall install, have operational, and maintain all required traffic control devices at all times during construction.

C. Initial temporary traffic control setup and takedown shall be performed by a California licensed C-31 contractor. Daily maintenance, not including relocation or addition of any traffic control devices to new locations, does not require a California C-31 license.

D. The Contractor shall strictly observe the Contract designated work hours. Work, including any traffic control modifications, must be started and completed within the designated work days and hours specified in Special Conditions 1-03 and on the Drawings.

E. All traffic control setups shall be complete and in place during the Contractor's allowed work time hours. Setting up or installing any traffic controls or traffic control devices during non-work time hours or hours specifically designated for traffic control setup or installation is strictly prohibited and may result in liquidated damages or other measures assessed by the agency having jurisdiction.

F. All traffic control operations performed by the Contractor shall be as shown on the Drawings and in accordance with the referenced documents, as a minimum, in Paragraph 1.02.

G. All traffic control devices shall be kept in their proper position at all times, and shall be repaired, replaced, or cleaned as necessary to preserve their appearance and continuity.

H. All traffic control devices shall be kept in their proper position at all times and shall be repaired, replaced, or cleaned as necessary to preserve their appearance and continuity.

I. Traffic control plans are provided in the Contract Documents as a general guide for traffic control installations during construction. These traffic control plans are not intended to convey traffic control devices for all required installations during facility construction, removal and replacement of temporary or permanent roadway surfacing, potholing operations, sewer relocation, or installation or removal of pipelines and equipment for transportation of trench dewatering water. The Contractor shall prepare additional traffic control plans and drawings as necessary and required by the jurisdictional authority to fully construct the Work. The Contractor shall allow 4 weeks for review by the agency having jurisdiction.

J. All field changes to the traffic control, whether ordered by the jurisdictional authority or desired by the Contractor for whatever reason, shall be immediately brought to the attention to the Owner prior to implementing any such changes. This is excepting in instances where a modification in traffic control is required for the immediate safety to the traveling public. In such a case, the Contractor shall notify the Owner directly following making the required changes.

K. Blue reflective bidirectional pavement markers shall be installed at each fire hydrant on the fire hydrant side of the roadway. This applies in areas where the traffic lane(s) have been shifted in such a manner which makes it difficult for the existing blue pavement marker to be seen by emergency vehicles from the temporary traffic lane.

L. Yellow temporary pavement markers shall be installed on temporary centerlines for traffic controls to be used longer than 24 hours. Markers shall be placed a maximum of 20 feet apart. Temporary pavement markers which have been damaged, destroyed or defaced in such a manner to lose its reflective properties shall be replaced.

M. All flashing and other traffic control lights shall be shielded such as to prevent shining of lights to nearby residences.

N. Traffic control shall only be used for the immediate construction work. Traffic control shall not be installed only for the staging and storage of materials.

O. Personnel assigned to traffic control duties shall not perform tasks not directly related to traffic control.

P. A minimum of 30 Calendar prior to scheduled removal of any traffic control loop, the Contractor shall contact the agency having jurisdiction to determine the type, size, and any special installation instructions required to restore the traffic control loop.

3.02 MODIFIED TRAFFIC CONTROL PLANS

A. The temporary traffic control to be used for the pipeline construction work is as shown on the Drawings. Additional traffic controls for pipeline construction may be required depending on the Contractors means and methods of construction. If the Contractor wishes to change any portion of the temporary traffic control shown on the Drawings, then the modified temporary traffic control plans must be submitted for approval by the Engineer, Owner, and the agencies having jurisdiction.

B. If the Contractor's desired methods of traffic control differ from what is shown on the plans, he must submit a modified traffic control plan to the Engineer. Once the Engineer and Owner have accepted the modified plan, it will be forwarded to the jurisdictional authority (City of Camarillo and/or Caltrans) for approval. Approval of a modified traffic control plan will be at the complete discretion of the Engineer, Owner and the jurisdictional authority. No additional time will be allowed for acquiring and implementing any modified traffic control plan. Attention is brought to the Contractor that the Owner may not approve the traffic control plan even if it is approved by the jurisdictional authority. The Contractor shall bear all costs associated with acquiring approval of a modified traffic control plan, including the cost of review by the Owner and Engineer. The Contractor shall allow 6 weeks for review by the agency having jurisdiction.

C. The Contractor is made aware that although the modified traffic control plans may follow the design standards set forth in these Specifications, they may not be approved. Approval or rejection of the modified traffic control plans shall be at the discretion of both the Owner and the agencies having jurisdiction.

D. Plans submitted for approval shall be prepared and stamped and signed by a professional engineer upon final submittal.

E. Cost for the preparation and submittal of plans shall be the responsibility of the Contractor. At the Owner's discretion, the Contractor may be charged a portion or all of the cost for coordination and review of the modified traffic control plans by the Owner or Engineer at the rate set forth in Special Conditions 1-18. Charges by jurisdictional agencies will be at their discretion. Allow a minimum of four weeks for review.

F. Any revision of modified traffic control plans must be reviewed and approved by the Owner and Engineer prior to submittal to the agency having jurisdiction.

G. The Contractor shall be solely responsible for obtaining approval of the modified traffic control plans. No Extra Work will be granted to the Contractor for failure to obtain approval of the modified traffic control plans in a timely manner.

3.03 TRAFFIC CONTROL MANAGER

A. The Contractor shall designate an individual or individuals to perform the duties of Traffic Control Manager (TCM). The Contractor shall identify an alternate TCM that can assume the duties of the assigned or primary TCM in the event of that person's inability to perform. Such alternates shall be adequately trained and certified to the same degree as the primary TCM. A TCM must be present at the Site during times when the Contractor requires traffic controls and is performing construction work.

B. The Contractor shall maintain 24-hour telephone numbers at which the TCM can be contacted and be available upon the Engineer's or Owner's request outside normal working hours. The TCM shall have the appropriate personnel, equipment and material available at all times in order to expeditiously correct any deficiency in the traffic control system.

C. The duties of the Traffic Control Manager shall include:

1. Discussing proposed traffic control measures and coordinating implementation of the Contractor-adopted traffic control plans(s) with the Engineer.

2. Coordinating all traffic control operations, including those of the traffic control subcontractor, other subcontractors, suppliers, and any adjacent construction or maintenance operations.

3. Coordinating the project's activities (such as ramp closures, road closures, and lane closures) with appropriate police, fire control agencies, city or county engineering, medical emergency agencies, school districts, and transit companies.

4. Overseeing all requirements of the contract which contribute to the convenience, safety, and orderly movement of vehicular and pedestrian traffic.

5. Having the latest adopted edition of the referenced Caltrans "Manual of Traffic Control for Construction and Maintenance Work Zones" and applicable standards and specifications available at all times on the Site.

6. Attending all project meetings where traffic management is discussed.

7. Keep daily diaries of traffic control setup and be responsible for knowing "field" traffic control operations.

8. Inspecting traffic control devices and nighttime lighting for proper location, installation, message, cleanliness, and effect on the traveling public. Traffic control devices shall be inspected each work shift. Traffic control devices left in place for 24 hours or more should also be inspected at least once during the nonworking hours when they are initially set up (during daylight or darkness, whichever is opposite of the working hours).

9. Inspecting traffic control devices to determine if corrections should be made due to the traffic controls not functioning as required. The TCM shall notify the Owner and agency having jurisdiction to obtain approval prior to making any revisions to the traffic control plan. Any recommendations for change by the TCM shall be in accordance with referenced documents in Paragraph 1.02.

10. Attending traffic control coordinating meetings or coordination activities.

3.04 INSTALLATION

A. No work will be allowed within the traveled way until all required traffic control devices and personnel are in place.

B. All applicable signs shall be removed or completely covered with either metal or plywood during periods when they are not needed. When the need for any of these signs has ceased, the Contractor, upon approval of the Owner, shall take down these signs, posts or supports.

C. All signs shall be reflective to be readable at night.

D. Recessed traffic plates placed within the traveled way shall have the top of the plate at the same level as the top of the finished surface. Gaps between the edge of the plate and the finished surface shall be filled with asphalt cement.

E. Any traffic plate placed on the finished paved surface within the traveled way shall be placed against temporary asphalt or other such material to provide a smooth transition from the finished surface and the top of the plate.

F. Any Owner furnished signs shall be returned to the Owner in good condition. All such signs lost, stolen, damaged, or destroyed shall be replaced by the Contractor in kind at the Contractor's expense or their value will be deducted from the Contractor's payments.

G. Signs, posts, or supports that are lost, stolen, damaged, destroyed, or which the Owner deems to be unacceptable, while their use is required on the Work, shall be replaced by the Contractor without additional compensation.

H. Traffic control loops or sensors removed in the construction work area shall be replaced and put into service immediately following relocation of the traffic control outside the area affecting the traffic control loop. Removal of the traffic control loop will be required for the subsequent street overlay work. If the street overlay will be placed within two Working Days of relocation of the traffic control outside the area affecting the traffic control loop, then the traffic control loop may be placed after the overlay is completed.

I. Trim or clear vegetation as minimally required to allow safe passage of vehicles and pedestrians. Contractor shall notify Owner 7 Calendar Days in advance of any vegetation clearing or trimming. If requested by the Owner and at no additional charge to the Owner, mark vegetation to be trimmed or cleared with distinguishable flags, tape, rope, or other non-permanent method such that the Owner may easily identify affected area.

END OF SECTION

APPENDIX A

STANDARD DRAWINGS

CALLEGUAS MUNICIPAL WATER DISTRICT
STANDARD DRAWINGS

100 SERIES	WELDED STEEL PIPE (WSP)	
101	WSP Rubber Gasket Joint	
101A	WSP with Tape Coating Rubber Gasket Joint	Sheet 1 of 2
101A	WSP with Tape Coating Rubber Gasket Joint with Welds	Sheet 2 of 2
102	WSP Buttstrap Joint	
103B	WSP 24" Flanged Outlet with Tape Coating for Pipe Class ≤ 300	
104	Blind Flange on WSP 24" Outlet	
106	WSP Field Welded Lap Joint	
107	Pipe Buttstrap Handhole	Sheet 1 of 2
107	Pipe Buttstrap Handhole	Sheet 2 of 2
300 SERIES	PIPE TRENCH DETAILS	
301	Pipe Trench	
400 SERIES	AIR VALVE DETAILS	
406	Buried AVARV ≥ 4" and ≤ 8"	Sheet 1 of 2
406	Buried AVARV ≥ 4" and ≤ 8"	Sheet 2 of 2
500 SERIES	BLOWOFF DETAILS	
501C	8" WSP Blowoff for Salinity Management Pipeline	Sheet 1 of 3
501C	8" WSP Blowoff for Salinity Management Pipeline	Sheet 2 of 3
501C	8" WSP Blowoff for Salinity Management Pipeline	Sheet 3 of 3
502	Tracer Wire System	Sheet 1 of 2
502	Tracer Wire System	Sheet 2 of 2
600 SERIES	BURIED VALVE INSTALLATION	
601	Butterfly Valve	
602	Valve Box and Cover	
603	Identification Details for Cast Iron Covers	
700 SERIES	STRUCTURES AND ACCESSORIES	
703A	Wall Penetration for CML&C Pipes near Groundwater	
703B	Wall Penetration for Pipes & Conduits Non-CML&C near Groundwater	
706	Step Detail	
707	Identification Tag for Manhole Lid and Valve Box Cover	
708A	Support for Pipes and Flanges ≤ 8" Dia.	
709B	Fully Venting Steel Pipe Vent	
711A	Manhole Access Structure	
711B	PVC Pipe Manhole Access Structure	

800 SERIES	MISCELLANEOUS	
803	Test Bulkhead for 24" Thru 72" Pipe	Sheet 1 of 2
803	Test Bulkhead for 24" Thru 72" Pipe	Sheet 2 of 2
811	Standard Project Sign	

900 SERIES	CATHODIC PROTECTION DETAILS
901	Bonding Jumper
902	Typical Joint Bonding
903A	Cathodic Test Station Terminal Box at Anode Group
903B	Cathodic Test Station Terminal Box without Anode Group
903C	Cathodic Test Station in Pipe Vent
904	Cathodic Test Station at Manhole
905	Cathodic Test Station Buried Valve
907B	Cathodic Test Station on Main Line Pipe
908	Rod to Pipe Connection
909	Cable to Rod Connection
910	Cable to Pipe Connection

1100 SERIES	UTILITY CROSSING AND PIPE SUPPORT	
1101	Utility Crossing over Existing Pipeline 6" to 1' Cover	
1102	Utility Crossing Under Existing Pipeline (>4' Trench Width) Pipe Support Plan	Sheet 1 of 4
1102	Utility Crossing Under Existing Pipeline (>4' Trench Width) Pipe Support Section - 1	Sheet 2 of 4
1102	Utility Crossing Under Existing Pipeline (>4' Trench Width) Pipe Support Section - 2	Sheet 3 of 4
1102	Utility Crossing Under Existing Pipeline (>4' Trench Width) Pipe Support Notes	Sheet 4 of 4
1103	Backfill for Crossing Beneath Existing Utilities	

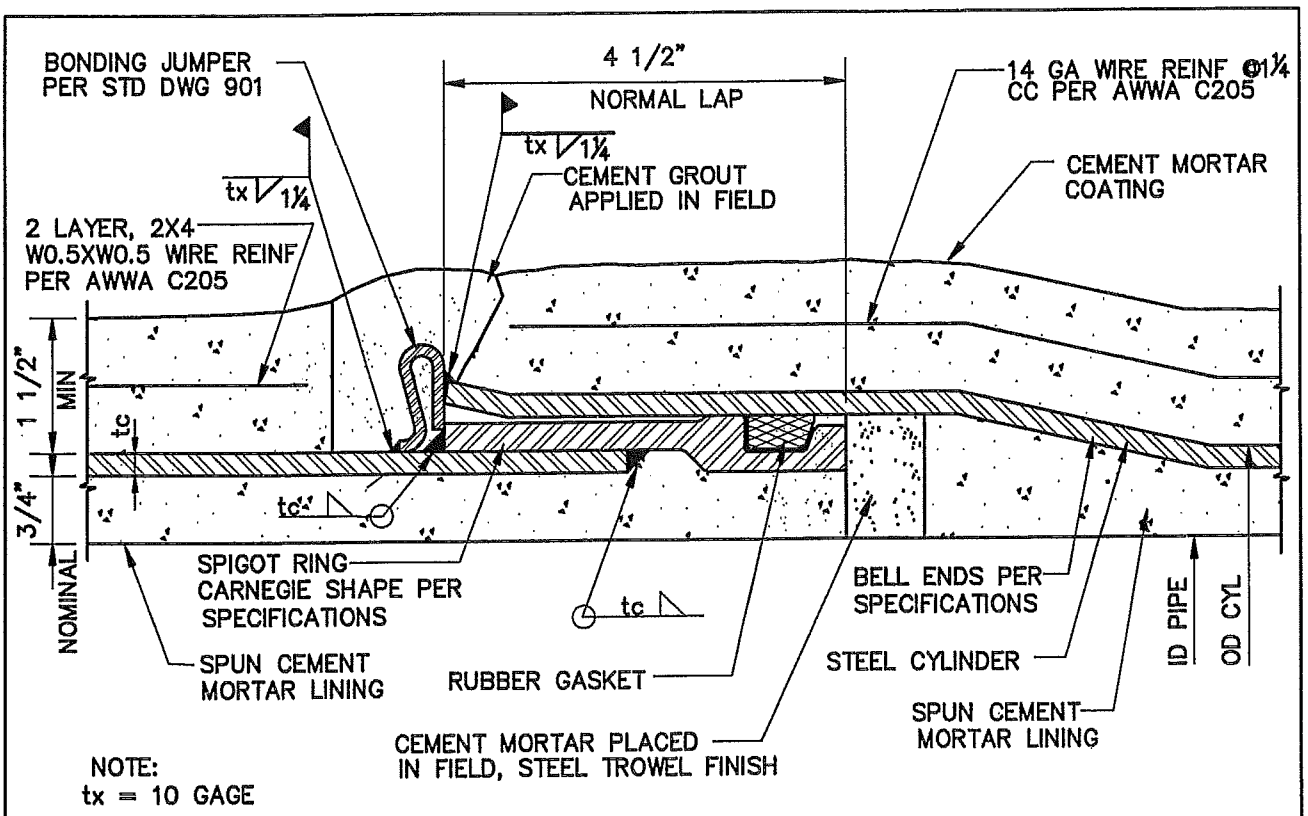

NOTE:
tx = 10 GAGE

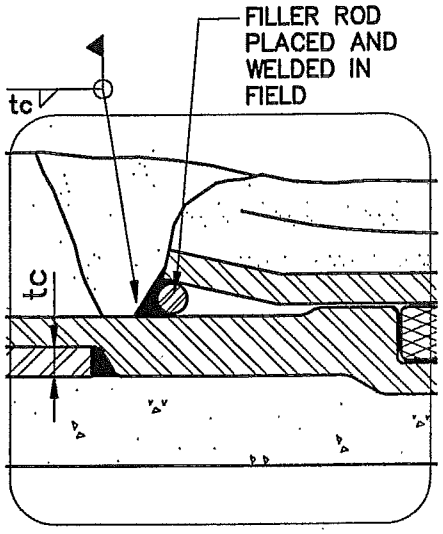

OUTSIDE WELD

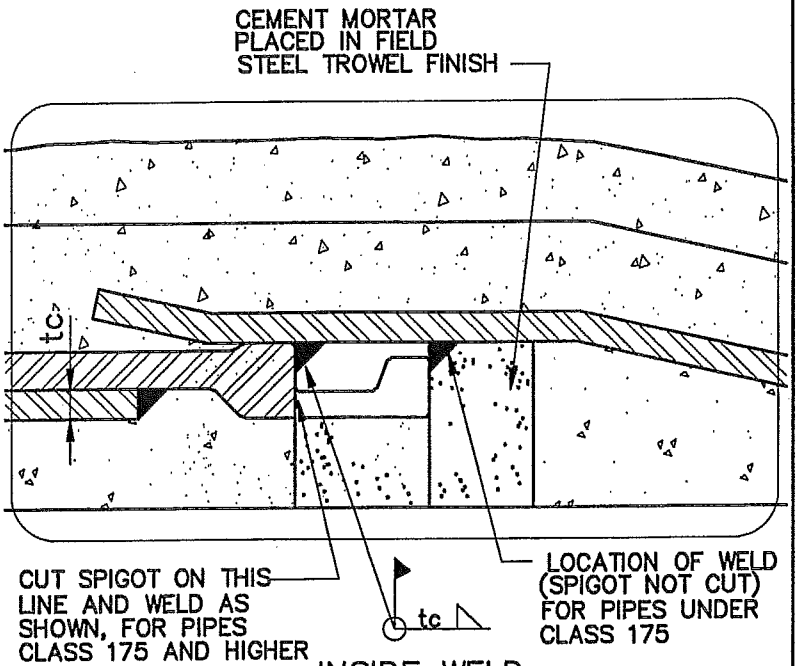

INSIDE WELD

MODIFICATIONS FOR WELDED JOINTS

REVISION	DATE	BY	DESCRIPTION
1	03/02	P&I	GENERAL
2	01/05	P&I	GENERAL
3	03/06	P&I	GENERAL

S. Mulligan 3/14/06 Digitally signed by S. Mulligan 3/14/06 DN: CN = S. Mulligan 3/14/06, C = US, O = Calleguas MWD, OU = Engineering Date: 2006.03.14 08:25:35 -08'00'

APPROVED MANAGER OF ENGINEERING DATE

CALLEGUAS MUNICIPAL WATER DISTRICT

THOUSAND OAKS CALIFORNIA

STANDARD DRAWINGS

WSP RUBBER GASKET JOINT

DWG NO 101

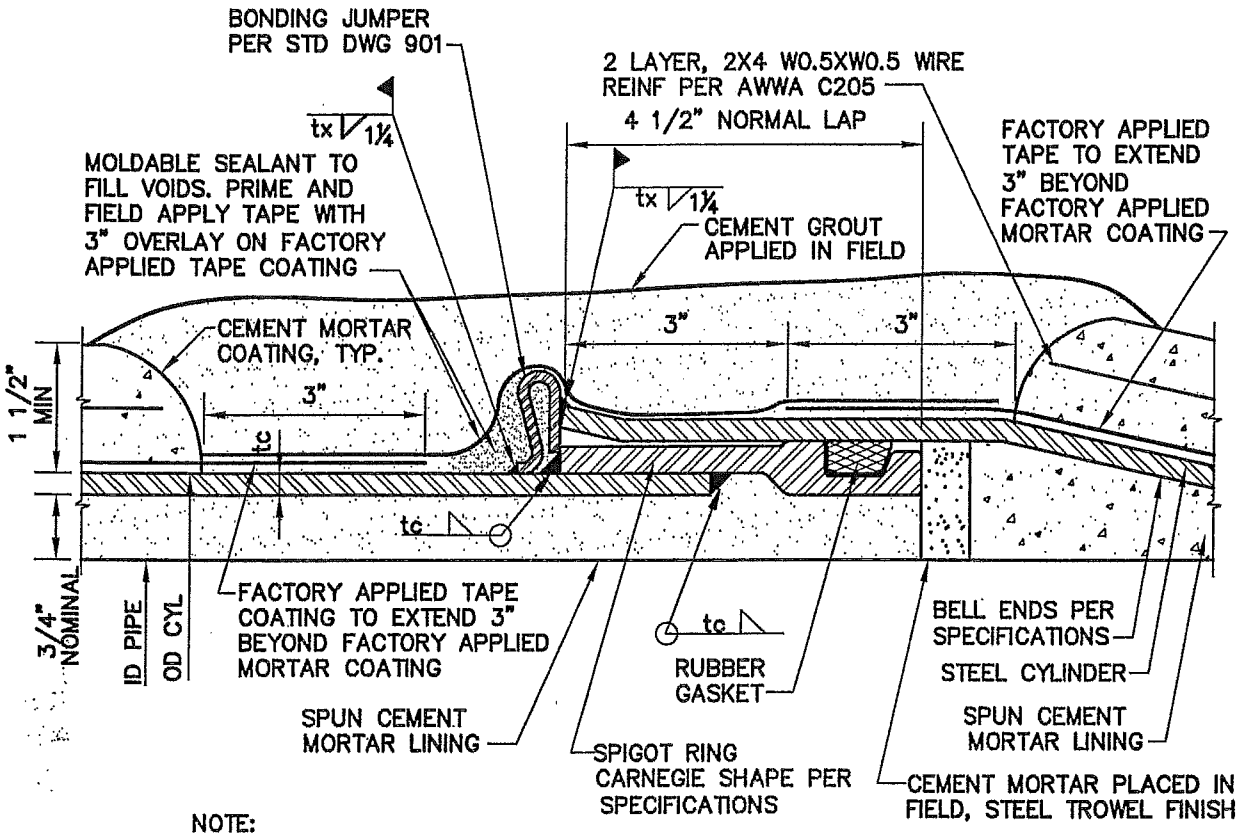

NOTE:
tx = 10 GAGE

REVISION	DATE	BY	DESCRIPTION
1	7/02	P&d	GENERAL
2	1/05	P&d	GENERAL
3	3/06	P&d	GENERAL

S. Mulligan 3/14/06 Digitally signed by S. Mulligan 3/14/06 DN: CN = S. Mulligan 3/14/06, C = US, O = Calleguas MWD, OU = Engineering Date: 2006.03.14 08:27:37 -08'00'

APPROVED MANAGER OF ENGINEERING DATE

CALLEGUAS MUNICIPAL WATER DISTRICT

THOUSAND OAKS CALIFORNIA

STANDARD DRAWINGS

WSP WITH TAPE COATING RUBBER GASKET JOINT

DWG NO 101A

SHEET 1 OF 2

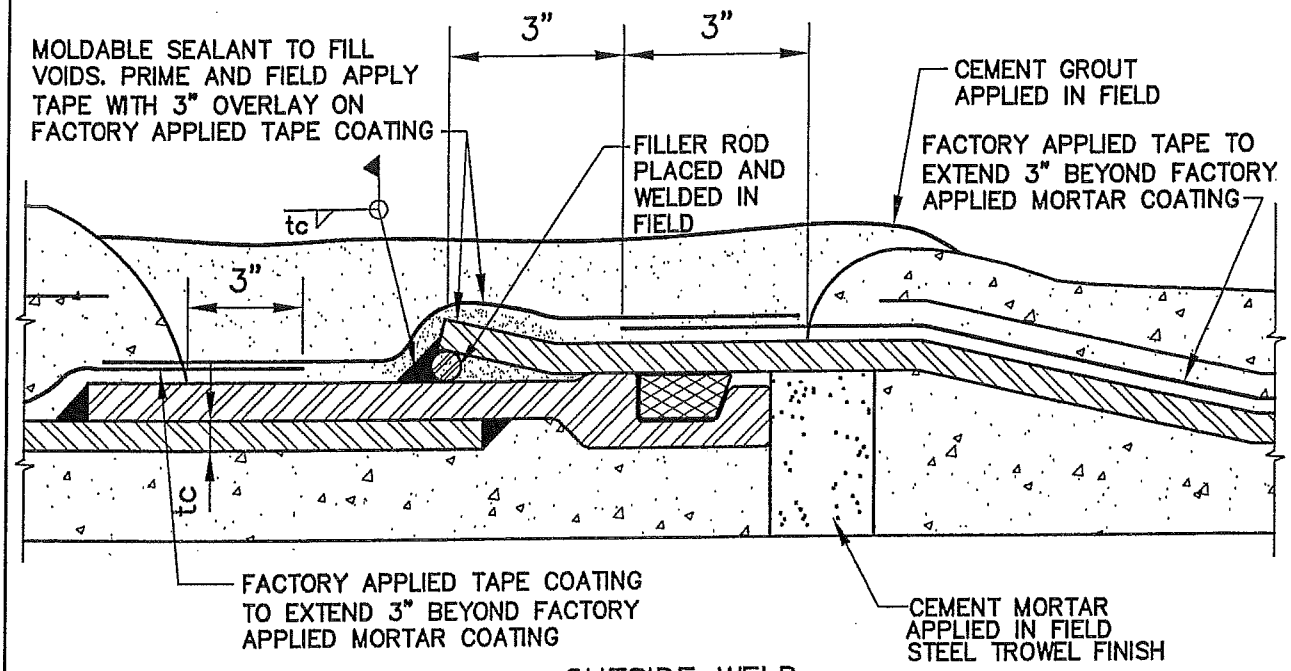

OUTSIDE WELD

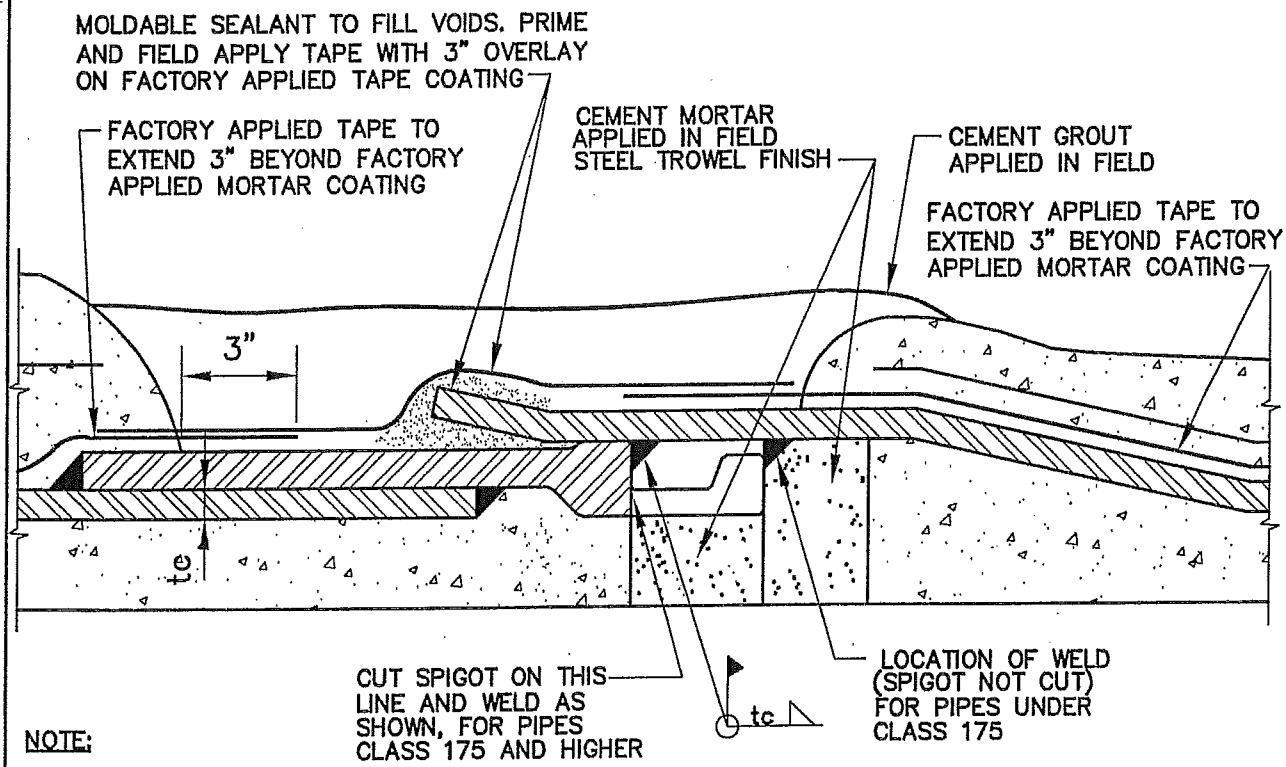

NOTE:

OTHER DETAILS AND DIMENSIONS PER STD DWG 101A SHEET 1 OF 2.

INSIDE WELD

MODIFICATIONS FOR WELDED JOINTS

REVISION	DATE	BY	DESCRIPTION
1	7/02	P&d	GENERAL
2	1/05	P&d	GENERAL
3	3/06	P&d	GENERAL

S. Mulligan 3/14/06 Digitally signed by S. Mulligan 3/14/06 DN: CN = S. Mulligan 3/14/06, C = US, O = Calleguas MWD, OU = Engineering Date: 2006.03.14 13:17:18 -08'00'

APPROVED MANAGER OF ENGINEERING DATE

CALLEGUAS MUNICIPAL WATER DISTRICT

THOUSAND OAKS CALIFORNIA

STANDARD DRAWINGS

WSP WITH TAPE COATING RUBBER GASKET JOINT WITH WELDS

DWG NO 101A

SHEET 2 OF 2

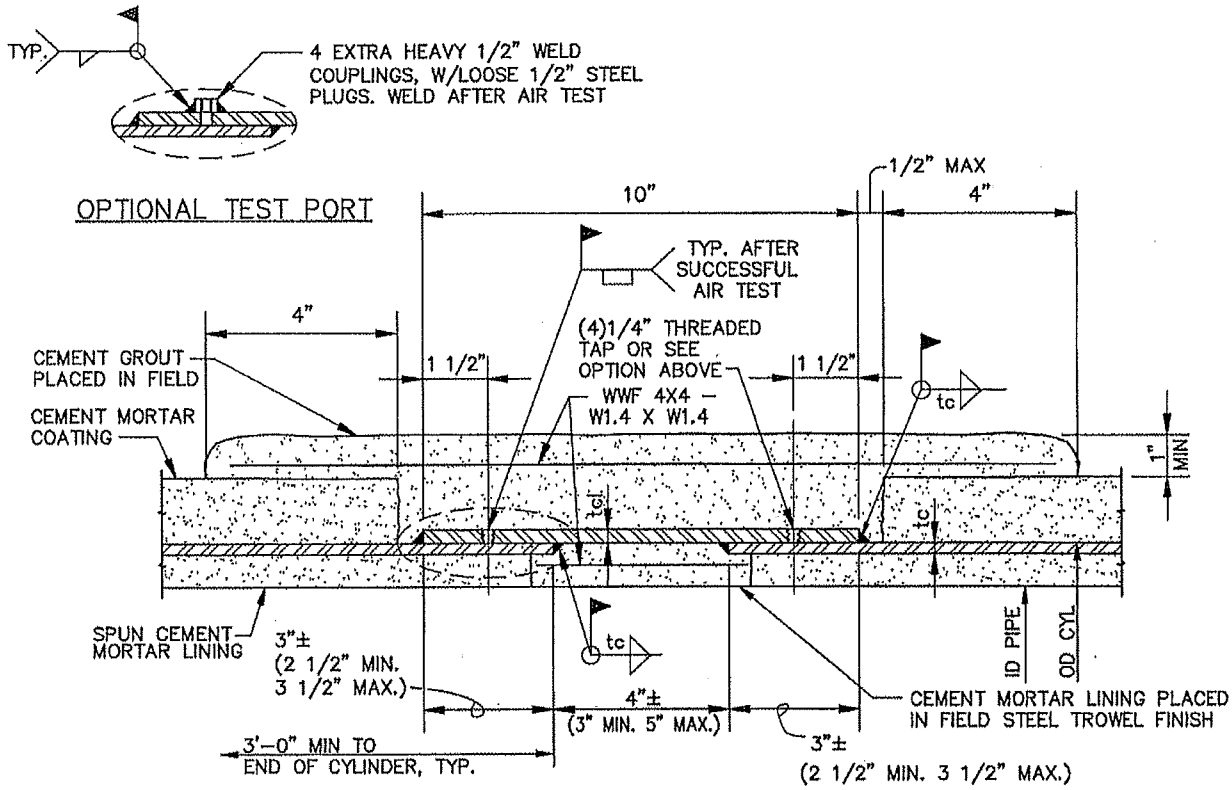

SECTION – MORTAR COATED WELDED STEEL PIPE

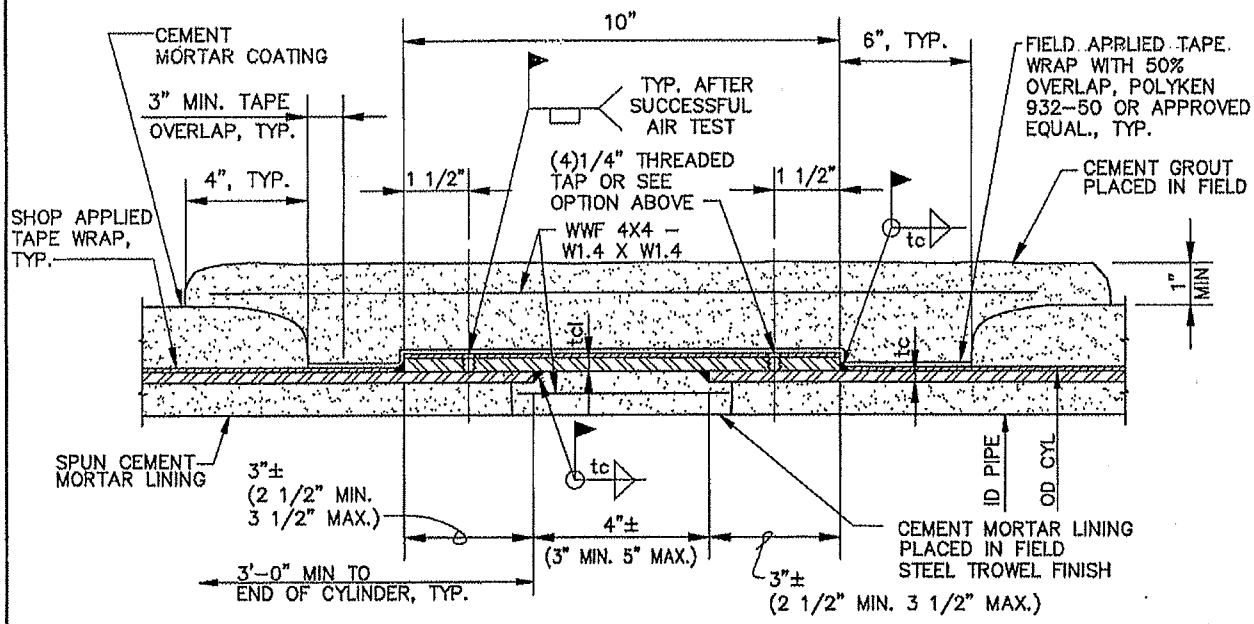

SECTION – TAPE WRAPPED AND MORTAR COATED WELDED STEEL PIPE

NOTES:
1. tcl SHALL BE EQUAL TO 1.5 X THE THICKNESS OF THICKEST CYLINDER IN ADJOINING PIPE SECTIONS.
2. PROVIDE HANDHOLE(S) PER STD. DWG. 107 AND OMIT AIR TEST HOLES, 1/2" WELD COUPLINGS AND INTERNAL WELDS ON BUTTSTRAP FOR PIPE SMALLER THAN 24-INCH IN DIAMETER.

REVISION	DATE	BY	DESCRIPTION
3	08/06	P&d	GENERAL
4	11/06	P&d	GENERAL
5	12/08	P&d	OPTIONAL TEST PORT

APPROVED Susan B. Mulligan 12/31/08
MANAGER OF ENGINEERING DATE

CALLEGUAS MUNICIPAL WATER DISTRICT
THOUSAND OAKS CALIFORNIA

STANDARD DRAWINGS
WSP BUTTSTRAP JOINT

DWG NO
102

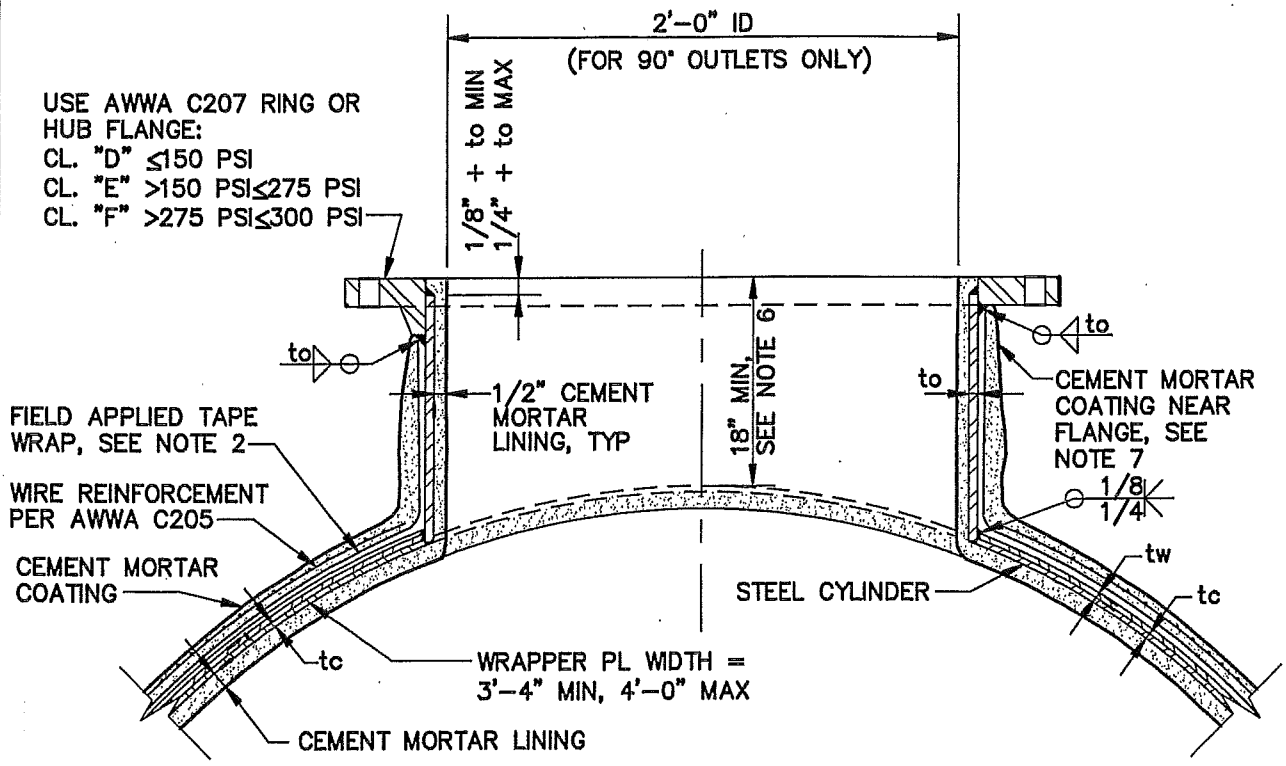

NOTES:

1. PAINT ALL EXPOSED STEEL SURFACES INCLUDING UNDERSIDE OF FLANGE AND EXCEPTING FLANGE FACE W/ PROTECTIVE COATING PER SPECIFICATIONS. FOR BURIED OUTLET OR WET CONDITION APPLICATION, WRAP OUTLET FLANGE WITH WAX TAPE PER SPECIFICATIONS (OR AWWA C217 IF NOT SPECIFIED IN SPECIFICATIONS). OVERLAP A MINIMUM OF 8" ONTO EXISTING COATING.

2. TAPE WRAP ALL STEEL TO RECEIVE FIELD APPLIED MORTAR COATING PER SPECIFICATIONS.

3. WRAPPER PLATE OUTLET SHOWN (tw=0.1046" MIN.). OUTLET REINFORCEMENT SHALL BE WRAPPER PLATE (MIN.) DESIGNED IN ACCORDANCE WITH AWWA M11. CROTCH PLATE SHALL BE PER AWWA M11 USING PIPE CLASS SHOWN ON THE DRAWINGS.

4. to = OUTLET STEEL CYLINDER THICKNESS:
0.25" MIN. FOR PIPE CLASS < 150 PSI AND 0.375" MIN OTHERWISE

5. tc = MAIN PIPE STEEL CYLINDER THICKNESS: PER PIPE CLASS SHOWN ON DRAWINGS.

6. HEIGHT OF OUTLET MAY BE GREATER PER REQUIREMENTS OF STD DWG 711.

7. APPLY THINNER MORTAR COATING TO OUTLET NEAR UNDERSIDE OF FLANGE TO ALLOW INSTALLATION AND REMOVAL OF NUTS AND BOLTS.

8. DESIGN FOR THIS STANDARD IS BASED ON 15 FEET MAXIMUM EARTH COVER AND 18 KSI STEEL PIPE CYLINDER DESIGN STRESS. SUBMIT PROPOSED DESIGN FOR REVIEW AND APPROVAL IF DESIGN CRITERIA VARIES.

REVISION	DATE	BY	DESCRIPTION
1	03/02	P&J	GENERAL
2	11/04	P&J	GENERAL
3	03/06	P&J	GENERAL

S. Mulligan 3/14/06 Digitally signed by S. Mulligan 3/14/06 DN: CN = S. Mulligan 3/14/06, C = US, O = Calleguas MWD, OU = Engineering Date: 2006.03.14 08:29:16 -08'00'

APPROVED MANAGER OF ENGINEERING DATE

CALLEGUAS MUNICIPAL WATER DISTRICT

THOUSAND OAKS CALIFORNIA

STANDARD DRAWINGS

WSP 24" FLANGED OUTLET WITH TAPE COATING FOR PIPE CLASS ≤ 300

DWG NO

103B

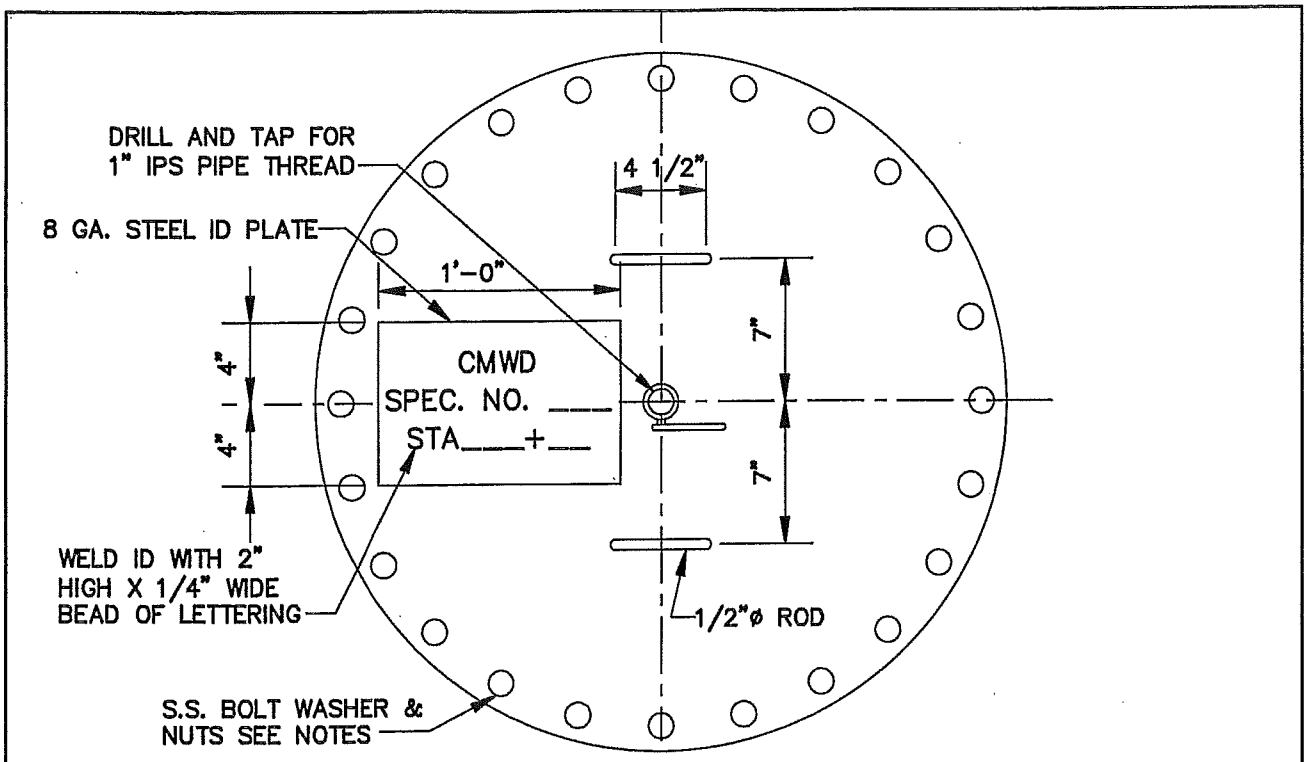

PLAN

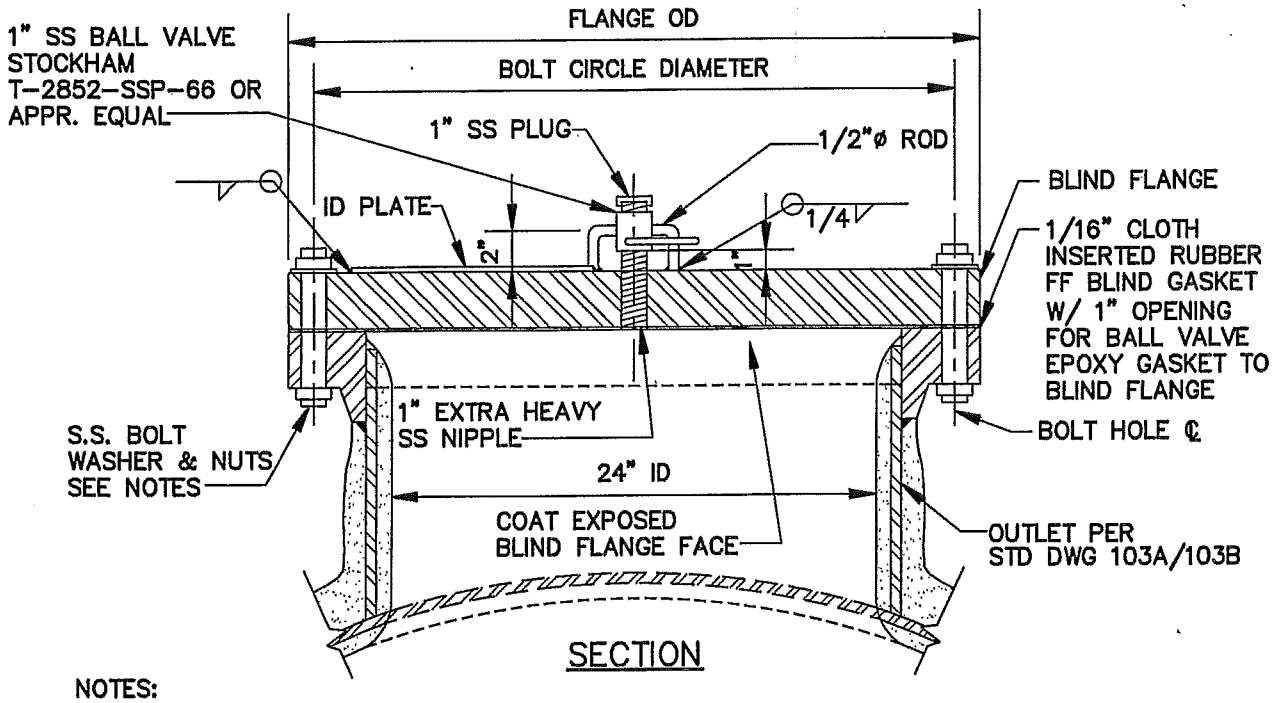

SECTION

NOTES:

1. PAINT ALL EXPOSED STEEL SURFACES EXCEPT MATING FLANGE FACE W/ PROTECTIVE COATING PER SPECIFICATIONS.
2. S.S. BOLTS SHALL BE ASTM A193, GRADE B8N, WITH ASTM A194, GRADE 8 NUTS.
3. FLANGE DATA PER AWWA 207. FLANGE RATED FOR PIPE CLASS SHOWN ON DRAWINGS.

REVISION	DATE	BY	DESCRIPTION
1	03/02	P&J	GENERAL
2	11/04	P&J	GENERAL
3	03/06	P&J	GENERAL

S. Mulligan 3/14/06 Digitally signed by S. Mulligan 3/14/06 DN: CN = S. Mulligan 3/14/06, C = US, O = Calleguas MWD, OU = Engineering Date: 2006.03.14 08:29:51 -08'00'

APPROVED MANAGER OF ENGINEERING DATE

CALLEGUAS MUNICIPAL WATER DISTRICT

THOUSAND OAKS CALIFORNIA

STANDARD DRAWINGS

BLIND FLANGE ON WSP 24" OUTLET

DWG NO 104

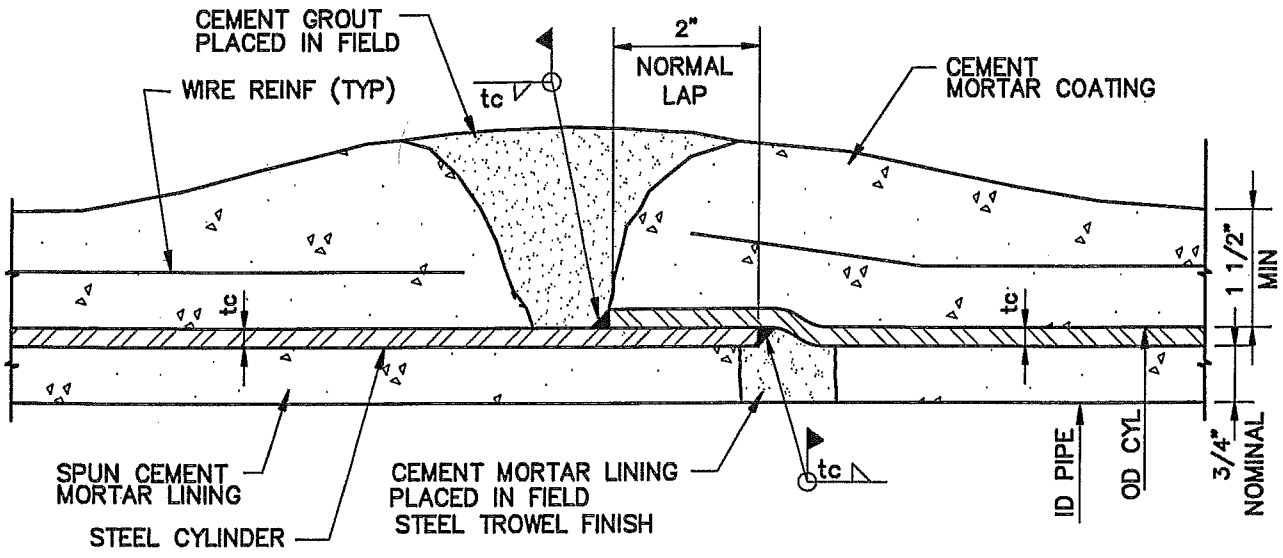

SECTION

NOTE:

1. IF TAPE WRAP IS SPECIFIED FOR PIPE, APPLY SIMILAR TO STD DWG 101A.

REVISION	DATE	BY	DESCRIPTION
1	07/99	CDM	GENERAL
2	03/02	P&I	GENERAL
3	03/06	P&I	GENERAL

APPROVED S. Mulligan 3/14/06 Digitally signed by S. Mulligan 3/14/06 DN: CN = S. Mulligan 3/14/06, C = US, O = Calleguas MWD, OU = Engineering Date: 2006.03.14 08:30:30 -08'00'

MANAGER OF ENGINEERING DATE

CALLEGUAS MUNICIPAL WATER DISTRICT

THOUSAND OAKS CALIFORNIA

STANDARD DRAWINGS

WSP FIELD WELDED LAP JOINT

DWG NO 106

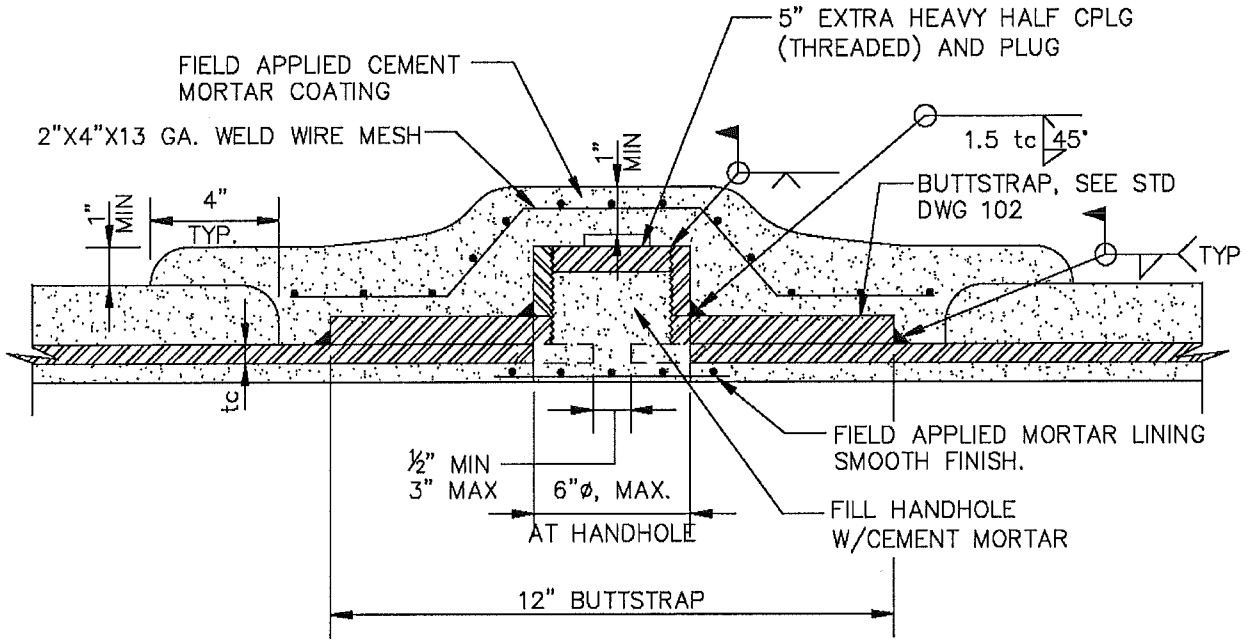

HANDHOLE FOR BUTTSTRAP CONNECTION – MORTAR COATED WELDED STEEL PIPE

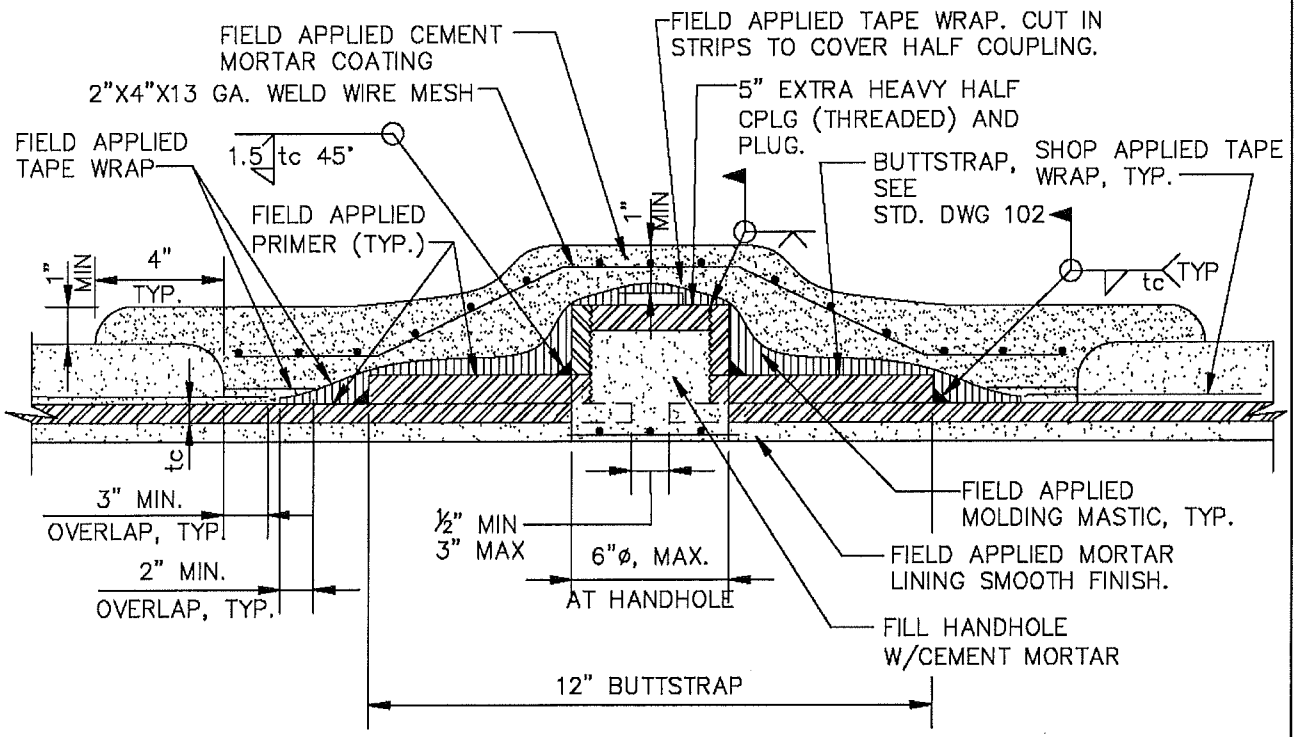

HANDHOLE FOR BUTTSTRAP CONNECTION – TAPE WRAPPED AND MORTAR COATED WELDED STEEL PIPE

REVISION	DATE	BY	DESCRIPTION
2	03/06	P&I	GENERAL
3	11/06	P&I	GENERAL
4	1/07	P&I	GENERAL

APPROVED Susan Mulligan Digitally signed by Susan Mulligan DN: cn=Susan Mulligan, c=US Date: 2007.02.06 17:29:23 -08'00'
MANAGER OF ENGINEERING DATE

CALLEGUAS MUNICIPAL WATER DISTRICT
THOUSAND OAKS CALIFORNIA

STANDARD DRAWINGS
PIPE BUTTSTRAP HANDHOLE

DWG NO 107
SHEET 1 OF 2

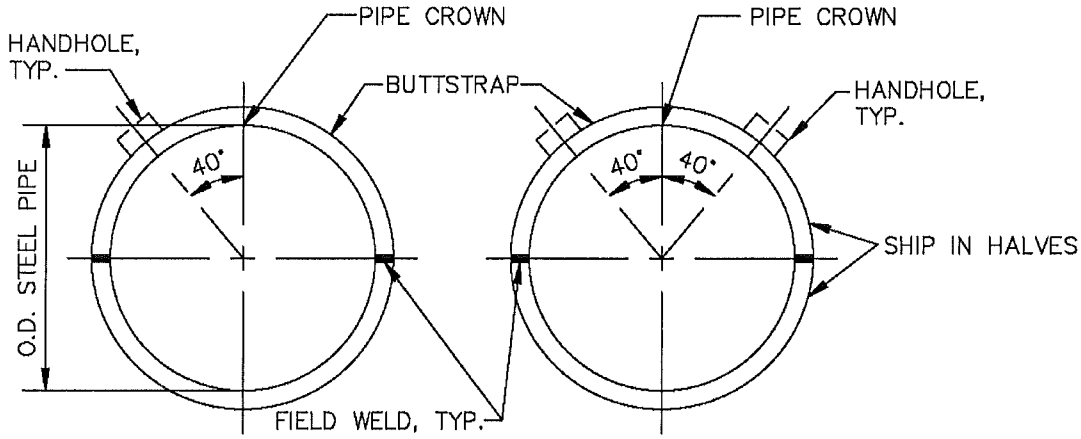

ONE HANDHOLE TWO HANDHOLES

HANDHOLE LOCATIONS

NOTES:

1. PROVIDE FILLER PLATE AS REQUIRED FOR A PIPE W/ SMALLER O.D. TO MATCH O.D.'S OF BUTTSTRAPPED PIPES.
2. PROVIDE ONE HANDHOLE FOR PIPE 18 INCHES AND SMALLER. PROVIDE TWO HANDHOLES FOR PIPES LARGER THAN 18 INCHES.
3. tc = STEEL CYLINDER THICKNESS OF PIPE.
4. OMIT AIR TEST HOLES AND 1/2" WELD COUPLINGS FOR AIR TEST AND INTERNAL WELDS ON BUTTSTRAP WHEN HANDHOLES ARE USED.
5. HANDHOLES MAY ONLY BE USED ON PIPES ≥ 24" IF ACCESS TO INTERIOR OF PIPELINE IS NOT AVAILABLE AND WITH PRIOR WRITTEN APPROVAL OF THE OWNER.
6. USE DYE PENETRATION TEST ON ALL WELDS WHERE HANDHOLES ARE USED.
7. BUTTSTRAP DETAILS SHALL BE AS PER STD. DWG 102, EXCEPT AS SHOWN ON STD DWG 107.

REVISION	DATE	BY	DESCRIPTION
2	03/06	P&I	GENERAL
3	11/06	P&I	GENERAL
4	1/07	P&I	GENERAL

APPROVED Susan Mulligan Digitally signed by Susan Mulligan DN: cn=Susan Mulligan, c=US Date: 2007.02.06 17:30:28 -08'00'
MANAGER OF ENGINEERING DATE

CALLEGUAS MUNICIPAL WATER DISTRICT
THOUSAND OAKS CALIFORNIA

STANDARD DRAWINGS
PIPE BUTTSTRAP HANDHOLE

DWG NO 107
SHEET 2 OF 2

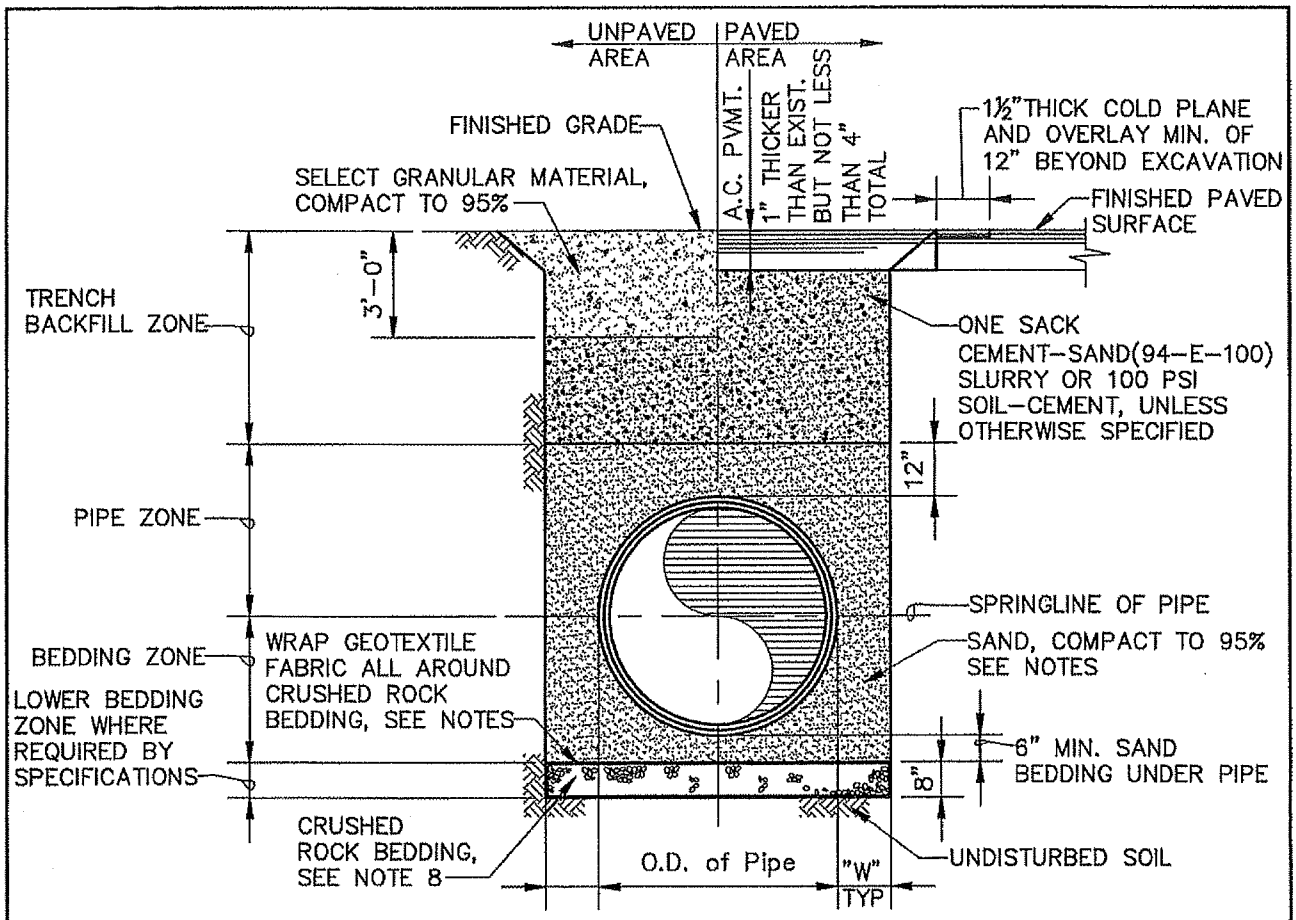

PIPE SIZE	"W" MINIMUM	"W" MAXIMUM
SMALLER THAN 14"	8"	12"
14" TO 30"	8"	18"
GREATER THAN 30" TO 72"	12"	24"

NOTES:

1. VERTICAL TRENCH WALLS AS REQUIRED TO PROTECT PARALLEL UTILITITES AND WORKERS AND/OR MAINTAIN TRAFFIC.
2. SLOPING TRENCH WALLS ARE ALLOWED 12" ABOVE TOP OF PIPE AS SHOWN EXCEPT FOR LOCATIONS WHERE NOTE 1 GOVERNS. CONTRACTOR SHALL SUBMIT PROPOSED TRENCH SECTION DETAILS FOR REVIEW TWO WEEKS PRIOR TO CONSTRUCTION IF SLOPING TRENCH WALLS ARE TO BE USED.
3. CONTRACTOR SHALL PROVIDE SAFE MEANS FOR CONDUCTING SOILS TESTS IN BEDDING AND BACKFILL BY OWNER'S MATERIALS INSPECTOR.
4. GEOTEXTILE FILTER FABRIC SHALL BE TENCATE MIRAFI N-SERIES 160N OR APPROVED EQUIVALENT AND HAVE A MINIMUM OF 12" LAP AT ALL EDGES.
5. SAND BACKFILL SHALL CONFORM TO SSPWC 200-1.5 WITH <0.5% WATER, 90-100% PASSING NO.4 SIEVE AND 0-5% PASSING NO.200 SIEVE, UNLESS OTHERWISE SPECIFIED.
6. ROADS, DRIVEWAYS AND WALKWAYS SHALL BE RESURFACED AS REQUIRED BY THE LOCAL AGENCY HAVING JURISDICTION AND BY THE SPECIFICATIONS.
7. CONTRACTOR TO VERIFY BACKFILL AND PAVEMENT REQUIREMENTS OF LOCAL AGENCY HAVING JURISDICTION. CONTRACTOR TO NOTIFY DISTRICT OF ANY REQUIRED DEVIATIONS FROM THIS STANDARD A MINIMUM OF TWO WEEKS PRIOR TO THE START OF WORK.
8. CRUSHED ROCK SHALL BE ¾" AND CONFORM TO SSPWC 200-1.2, UNLESS OTHERWISE SPECIFIED.
9. IF ADDITIONAL PIPE TRENCH DETAIL IS PROVIDED IN DRAWINGS, THIS DETAIL SHALL NOT APPLY.

REVISION	DATE	BY	DESCRIPTION
2	01/08	P&I	GENERAL
3	06/08	P&I	GENERAL
4	02/10	P&I	GEOTEXTILE CHANGE

APPROVED Susan B. Mulligan 2/3/10
MANAGER OF ENGINEERING DATE

CALLEGUAS MUNICIPAL WATER DISTRICT
THOUSAND OAKS CALIFORNIA

STANDARD DRAWINGS
PIPE TRENCH

DWG NO
301

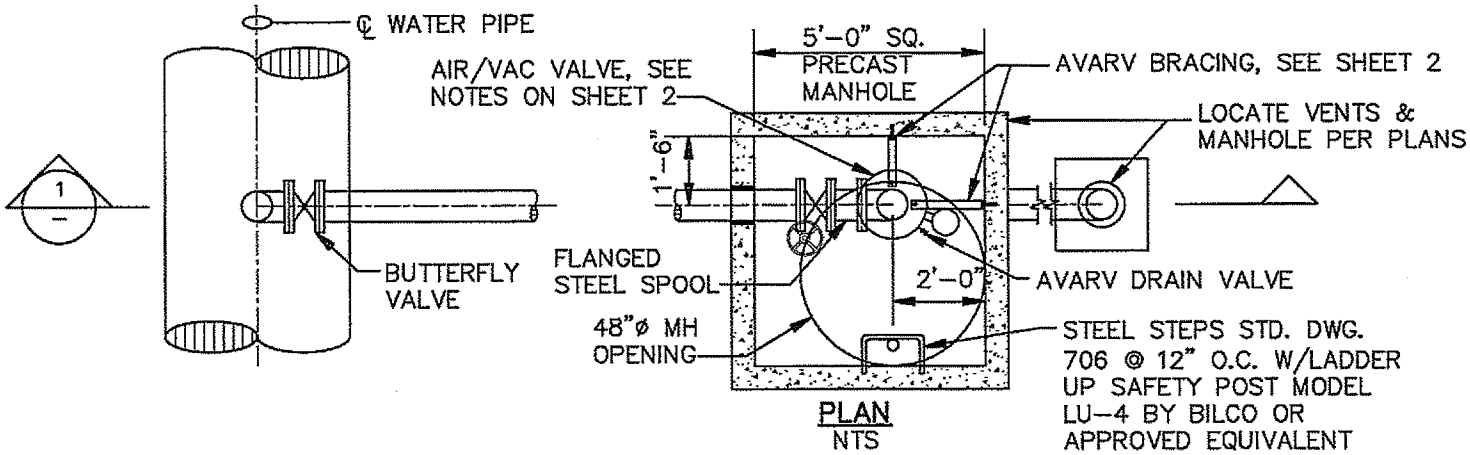

PLAN
NTS

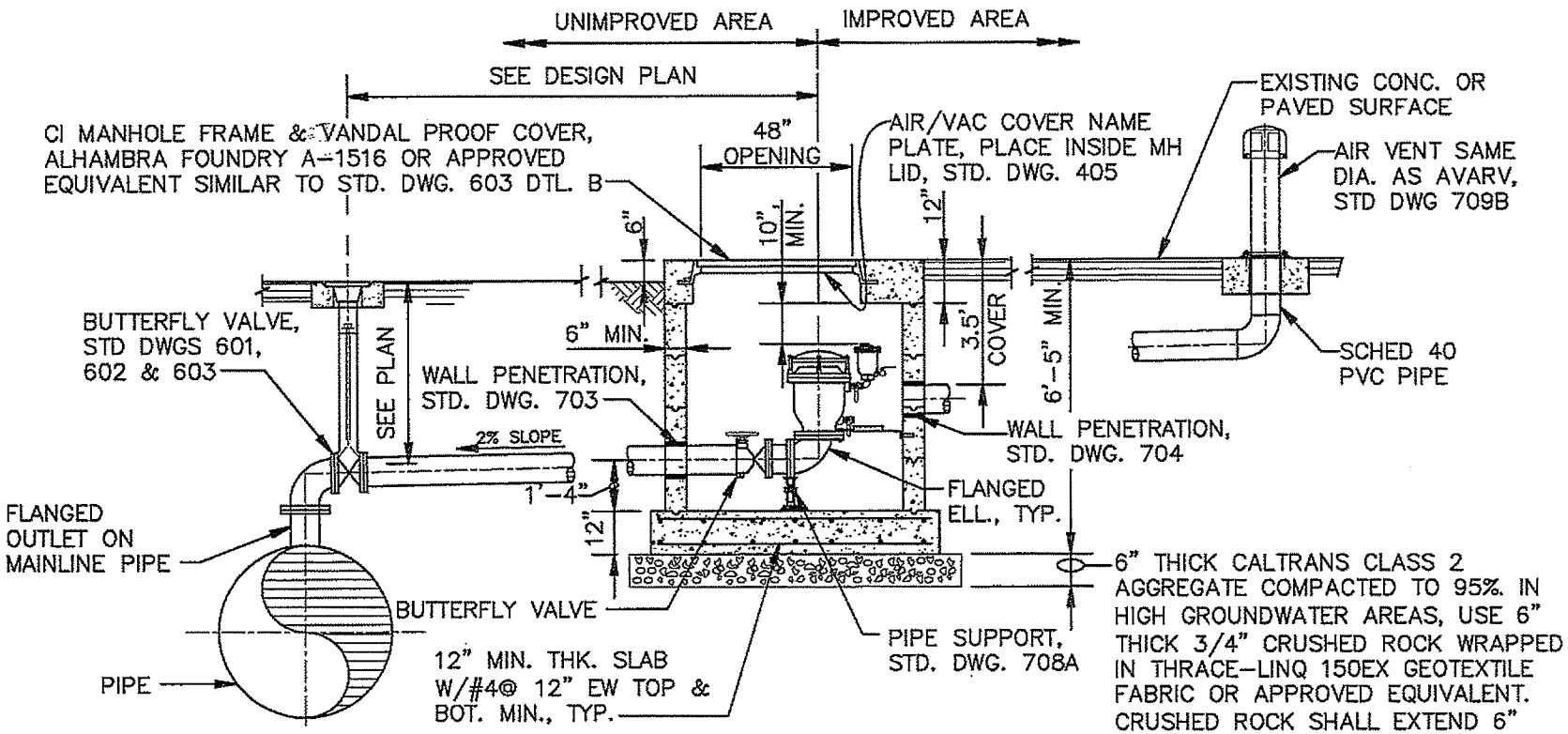

SECTION 1
NTS

REVISION	DATE	BY	NEW ISSUE	DESCRIPTION
0	05/09	P&J		

APPROVED S B Mulligan 5/11/09
MANAGER OF ENGINEERING DATE

CALLEGUAS MUNICIPAL WATER DISTRICT
THOUSAND OAKS CALIFORNIA

STANDARD DRAWINGS
BURIED AVARV ≥ 4" AND ≤ 8"

DWG NO. 406
SHEET 1 OF 2

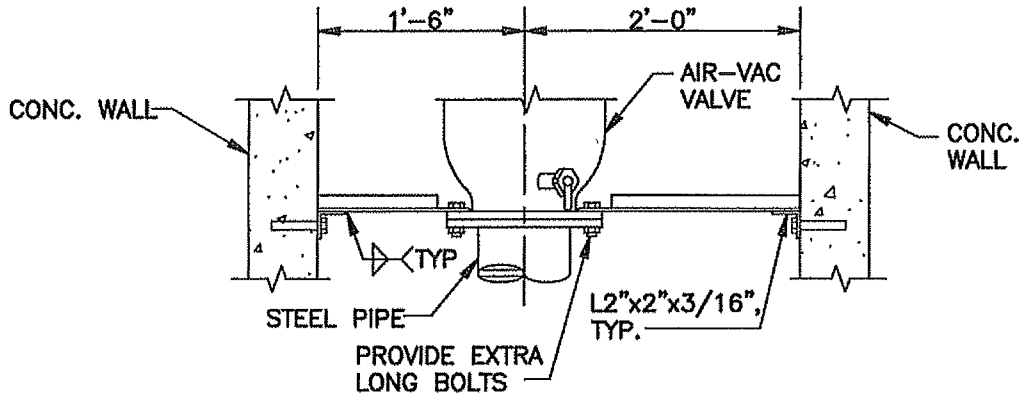

AVARV BRACING SECTION 1
NTS

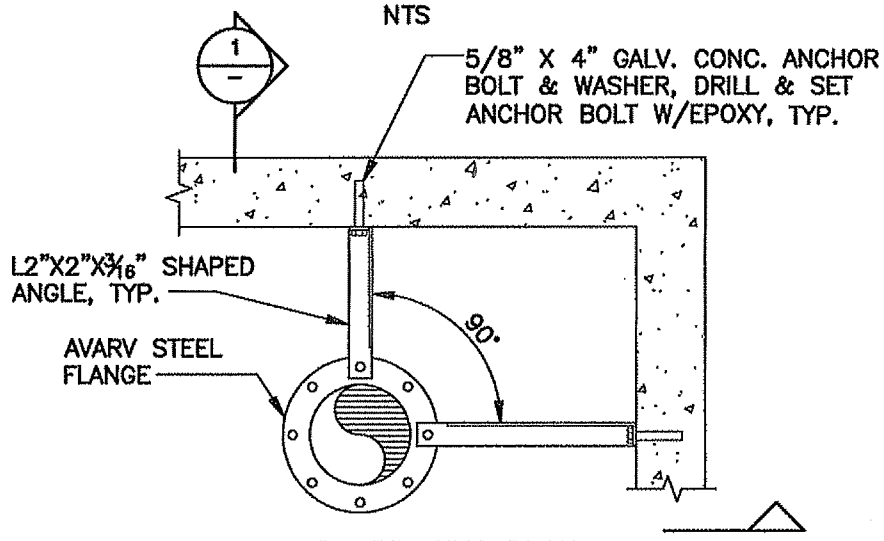

AVARV BRACING PLAN
NTS

NOTE:

1. CUSTOM DUPLEX COMBINATION AIR VALVES SHALL BE APCO SERIES 1800 OR A COMBINATION OF VAL-MATIC SERIES 100 AIR & VACUUM VALVES WITH A VAL-MATIC MODEL 50 AIR RELEASE VALVE, UNLESS OTHERWISE SPECIFIED. ALL VALVES SHALL HAVE SS COMPONENTS AND EPOXY COATING INSIDE AND OUTSIDE.
2. RESILIENT SEAT MATERIAL HARDNESS SHALL BE AS FOLLOWS.

WORKING PRESSURE (PSI) AT AIR/VAC	≤15	>15
DUROMETER HARDNESS	35-45	55-65

3. ALL PIPE TO BE SCHEDULE 40 CML&C UNLESS OTHERWISE SPECIFIED.
4. FOR LOCATION OF MANHOLES, DISTANCES, UTILITIES, ETC., SEE LAYOUT PLAN.
5. EXACT LOCATION OF AVARV MANHOLES WILL BE DETERMINED IN THE FIELD BY THE OWNER.
6. COAT ALL STEEL SURFACES AS PER SPECIFICATIONS.
7. PROVIDE AND INSTALL UP TO 5' OF EXTRA PIPE AND FITTINGS FOR FIELD ADJUSTMENTS AT THE INSTRUCTION AND AT NO ADDITIONAL COST TO THE OWNER.
8. WHERE CONCRETE PAD IS WITHIN BOTH PAVED AND UNPAVED AREAS, SET TOP OF PAD FLUSH WITH PAVED GROUND.
9. WATERPROOF EXTERIOR SURFACE WITH CRYSTALLINE WATERPROOFING AS MANUFACTURED BY PERMAQUIK OR APPROVED EQUIVALENT.
10. BACKFILL 8" PIPE WITH 1 SACK CEMENT-SAND SLURRY, MANHOLE SHALL BE BACKFILLED TO 95% RELATIVE COMPACTION.

REVISION	DATE	BY	DESCRIPTION
0	05/09	P&I	NEW ISSUE

APPROVED SBMulligan 5/11/09
MANAGER OF ENGINEERING DATE

CALLEGUAS MUNICIPAL WATER DISTRICT
THOUSAND OAKS CALIFORNIA

STANDARD DRAWINGS
BURIED AVARV ≥ 4" AND ≤ 8"

DWG NO 406
SHEET 2 OF 2

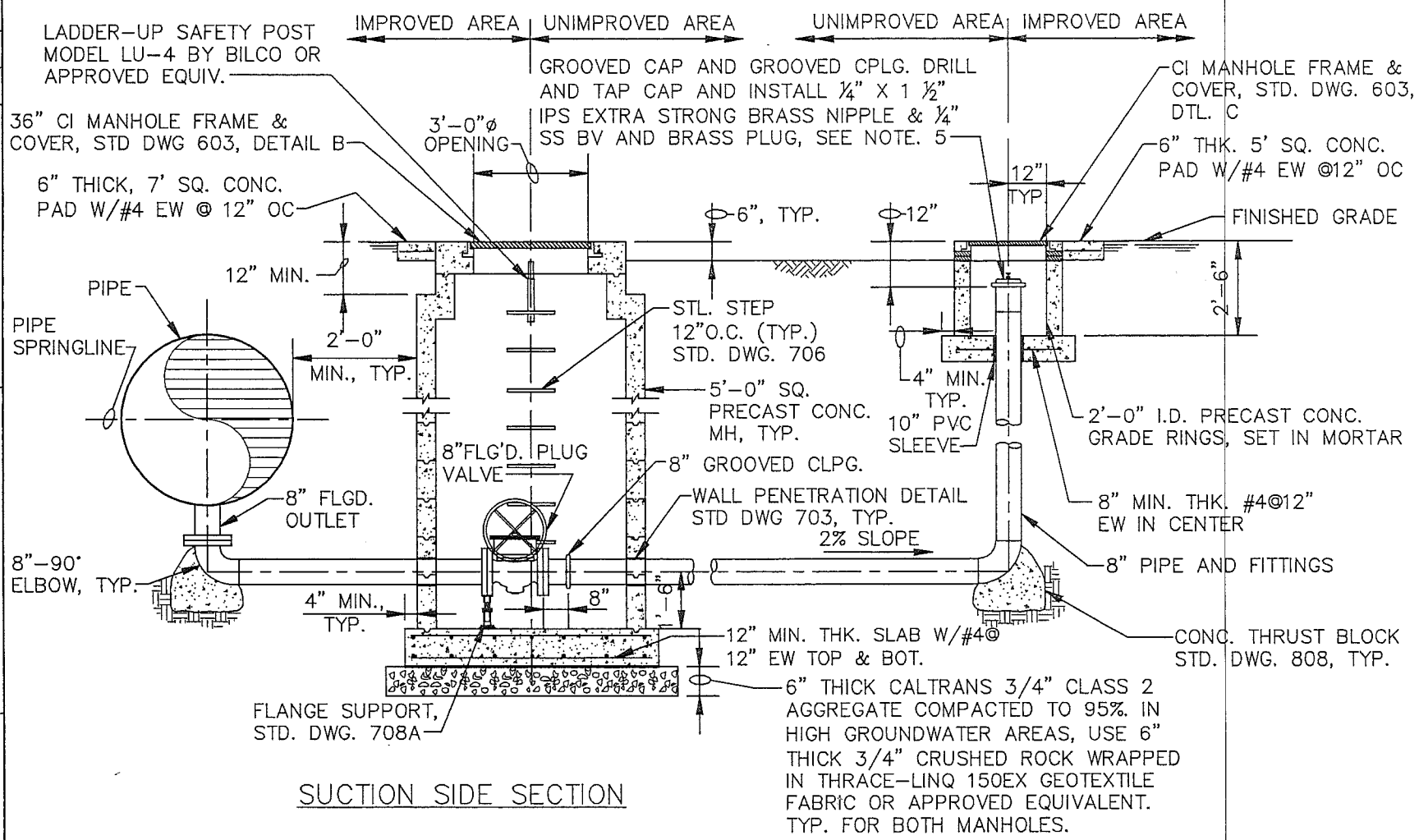

SUCTION SIDE SECTION

REVISION	DATE	BY	DESCRIPTION
2	12/06	P&I	GENERAL
3	03/10	P&I	GENERAL

APPROVED Susan B. Mulligan 3/3/10
MANAGER OF ENGINEERING DATE

CALLEGUAS MUNICIPAL WATER DISTRICT
THOUSAND OAKS CALIFORNIA

STANDARD DRAWINGS

8" WSP BLOWOFF FOR SALINITY MANAGEMENT PIPELINE

DWG NO 501C

SHEET 1 OF 3

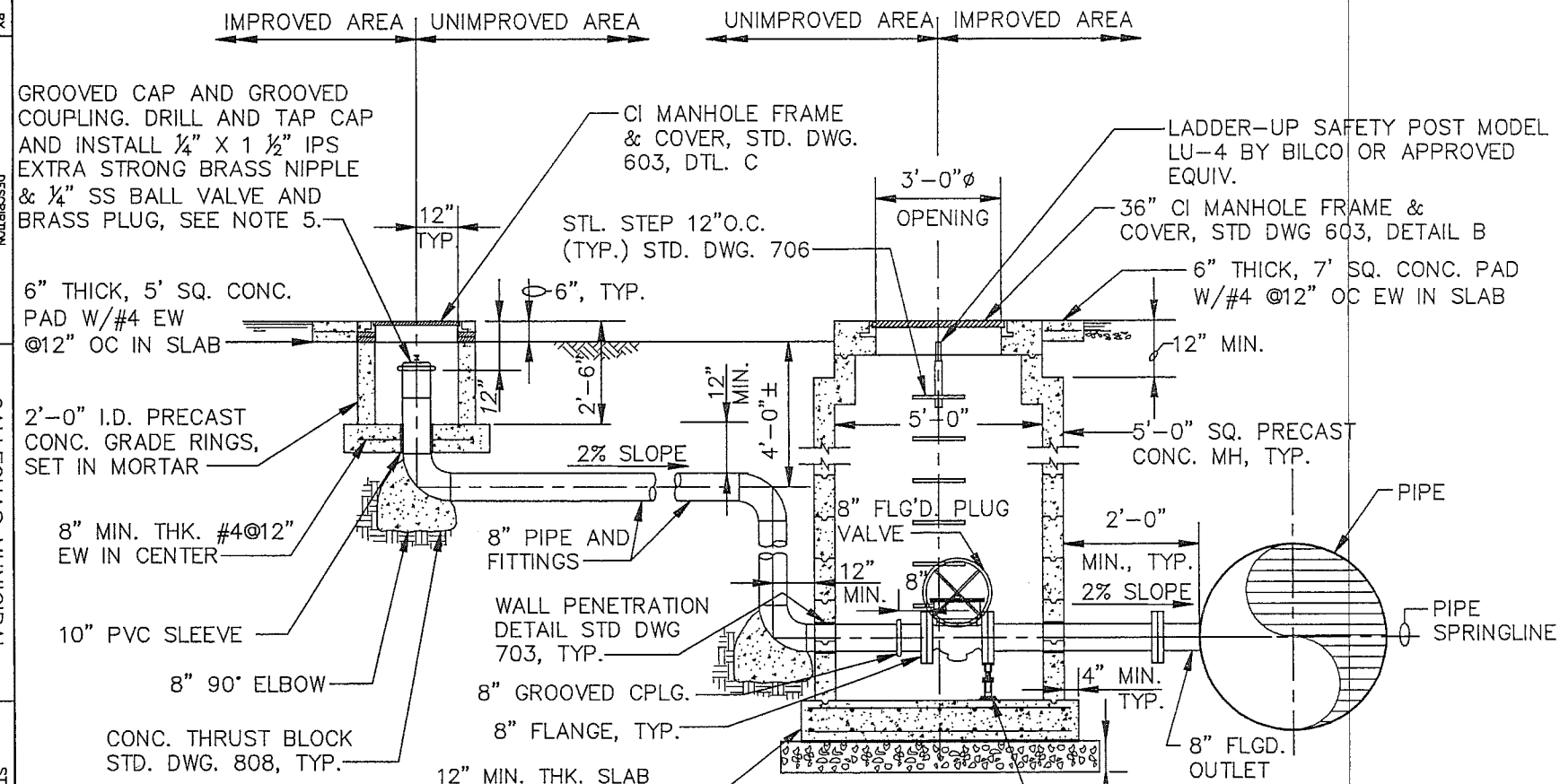

DISCHARGE SIDE SECTION

REVISION	DATE	BY	DESCRIPTION
2	12/06	P&I	GENERAL
3	03/10	P&I	GENERAL

APPROVED Susan B. Mullingan 3/3/10
MANAGER OF ENGINEERING DATE

CALLEGUAS MUNICIPAL WATER DISTRICT
THOUSAND OAKS CALIFORNIA

STANDARD DRAWINGS

8" WSP BLOWOFF FOR SALINITY MANAGEMENT PIPELINE

DWG NO 501C

SHEET 2 OF 3

NOTES:

1. THESE NOTES APPLY TO ALL SHEETS OF THIS STANDARD.
2. FOR LOCATION OF MANHOLES, DISTANCES, UTILITIES, ETC., SEE LAYOUT PLAN.
3. EXACT LOCATION OF BLOW-OFF MANHOLES WILL BE DETERMINED IN THE FIELD BY THE OWNER.
4. ALL 8" DIAMETER PIPES AND FITTINGS SHALL BE CML&C SCHEDULE 40 STL. ALL JOINTS TO BE WELDED.
5. COAT ALL STEEL SURFACES AS PER SPECIFICATIONS.
6. GROOVED CAP SHALL BE MADE OF FUSION BONDED EPOXY COATED STEEL MATERIAL.
7. ROTATE MAINLINE PIPE AS REQUIRED TO PROVIDE 2% MIN. SLOPE FOR THE BLOW-OFF SUCTION AND DISCHARGE PIPES.
8. PROVIDE AND INSTALL UP TO 5' OF EXTRA PIPE AND TWO EXTRA BUTTSTRAPS FOR FIELD ADJUSTMENTS AT THE INSTRUCTION OF AND AT NO ADDITIONAL COST TO THE OWNER.
9. WHERE CONCRETE PAD IS WITHIN BOTH PAVED AND UNPAVED AREAS, SET TOP OF PAD FLUSH WITH PAVED GROUND.
10. WATERPROOF EXTERIOR SURFACE WITH CRYSTALLINE WATERPROOFING AS MANUFACTURED BY PERMAQUIK OR APPRO. EQUIV.
11. BACKFILL 8" PIPE WITH 1 SACK CEMENT-SAND SLURRY, MANHOLE SHALL BE BACKFILLED TO 95% RELATIVE COMPACTION UNLESS OTHERWISE SPECIFIED.
12. PIPE PENETRATIONS IN 5'-0" SQ MH SHALL BE PER STD. DWG. 703.
13. TAPE WRAP ALL BURIED STEEL THAT IS NOT MORTAR COATED PER SPECIFICATIONS (OR AWWA C217 IF NOT SPECIFIED).

REVISION	DATE	BY	DESCRIPTION
2	12/06	P&d	GENERAL
3	03/10	P&d	GENERAL

APPROVED Susan B. McDigan 3/3/10
MANAGER OF ENGINEERING DATE

CALLEGUAS MUNICIPAL WATER DISTRICT
THOUSAND OAKS CALIFORNIA

STANDARD DRAWINGS
8" WSP BLOWOFF FOR SALINITY MANAGEMENT PIPELINE

DWG NO
501C

SHEET 3 OF 3

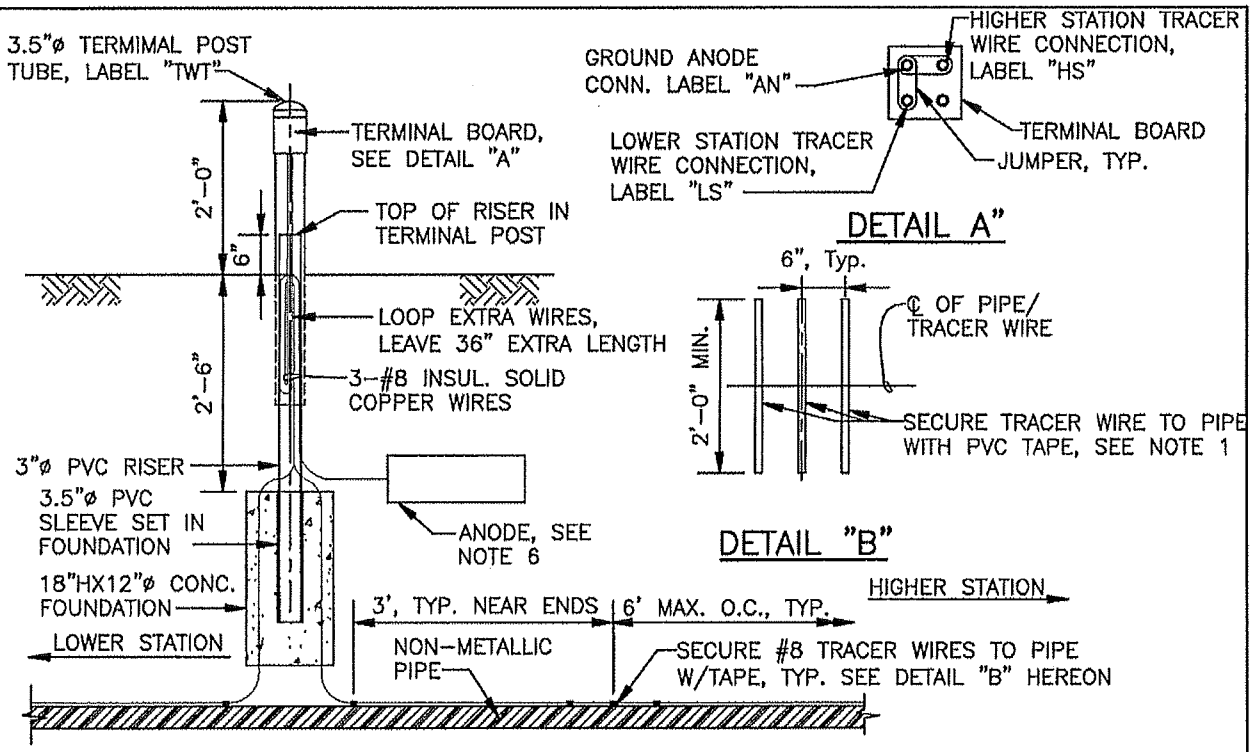

TYPE "A" – ABOVE GROUND POST

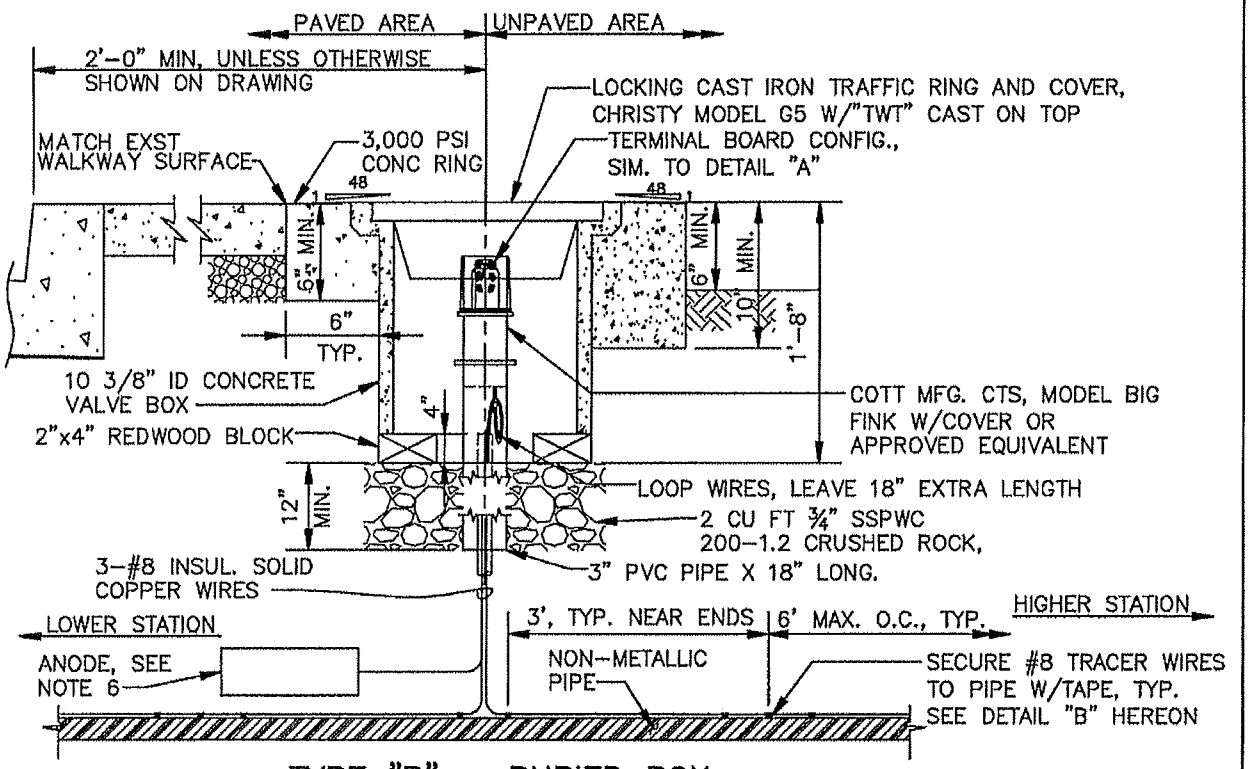

TYPE "B" – BURIED BOX

REVISION	DATE	BY	DESCRIPTION
1	1/08	P&J	ADD SURFACE BOX AND NOTES

APPROVED S B Mulligan 4/23/08
MANAGER OF ENGINEERING DATE

CALLEGUAS MUNICIPAL WATER DISTRICT
THOUSAND OAKS CALIFORNIA

STANDARD DRAWINGS
TRACER WIRE SYSTEM

DWG NO 502

SHEET 1 OF 2

TRACER WIRE SYSTEM NOTES:

1. FOR 12" AND LARGER PIPE, SECURE TRACER WIRE TO THE PIPE AS SHOWN. FOR SMALLER THAN 12" PIPE, WRAP TAPE HELICALLY AROUND PIPE A MINIMUM OF 3 TIMES TO SECURE THE TRACER WIRE. PVC TAPE SHALL BE 3M BRAND SCOTCH SUPER 88 OR APPROVED EQUIVALENT.

2. TRACER WIRE TERMINATION POST OR BOX SHALL BE PLACED OFF THE EDGE OF THE TRAVELED ROADWAY AND AS SHOWN ON THE DRAWINGS OR AS DIRECTED BY THE OWNER. POST SHALL BE USED IN UNPAVED AREAS AND BOX SHALL BE USED IN SIDEWALKS UNLESS OTHERWISE SHOWN ON THE DRAWINGS.

3. ABOVE GROUND POST TRACER WIRE TEST STATION SHALL BE "SCEPTER" MODEL LCTS10 BY CARSONITE OR AN APPROVED EQUIVALENT, BLUE IN COLOR, MOUNTED ON A 3.5" OD, 24" TALL POST WITH ANCHOR. TERMINAL BOARD SHOWN MAY NOT MATCH THAT PROVIDED BY MANUFACTURER, BUT SHALL BE MARKED AND FUNCTION IN A LIKE MANNER.

4. WHERE TRACER WIRE IS DIRECT BURIED AND NOT ATTACHED TO A PIPE, TRACER WIRE SHALL BE INSTALLED IN A 1" PVC CONDUIT. BURIED CONDUITS SHALL BE NO LESS THAN 36" DEEP.

5. a. LEAD WIRES SHALL BE LONG ENOUGH TO PERMIT INSTALLATION BETWEEN TEST STATION AND CONNECTION POINT WITHOUT THE USE OF UNDERGROUND SPLICES EXCEPT WHERE SPLICING IS UNAVOIDABLE AND SPECIFICALLY APPROVED IN ADVANCE BY CALLEGUAS.

   b. WHERE SPLICING IS USED AND/OR REPAIRS ARE MADE TO DAMAGED WIRES, THEY SHALL BE MADE WITH AN IDEAL INDUSTRIES THERMO-SHRINK UNDERGROUND SPLICE KIT, CATALOG NO. 46-401 OR APPROVED EQUIVALENT.

6. ANODE SHALL BE A 9 LB. PACKAGED MAGNESIUM ANODE, FARWEST CORROSION CONTROL CO. TYPE 9D3 OR APPROVED EQUIVALENT. INSTALL AT EVERY TERMINAL POST OR BOX UNLESS THE PLANS SPECIFICALLY STATE THAT THE ANODE NEED NOT BE INSTALLED.

REVISION	DATE	BY	DESCRIPTION
1	1/08	P&d	ADD SURFACE BOX AND NOTES

APPROVED SBMulligan 4/23/08
MANAGER OF ENGINEERING DATE

CALLEGUAS MUNICIPAL WATER DISTRICT
THOUSAND OAKS CALIFORNIA

STANDARD DRAWINGS
TRACER WIRE SYSTEM

DWG NO 502

SHEET 2 OF 2

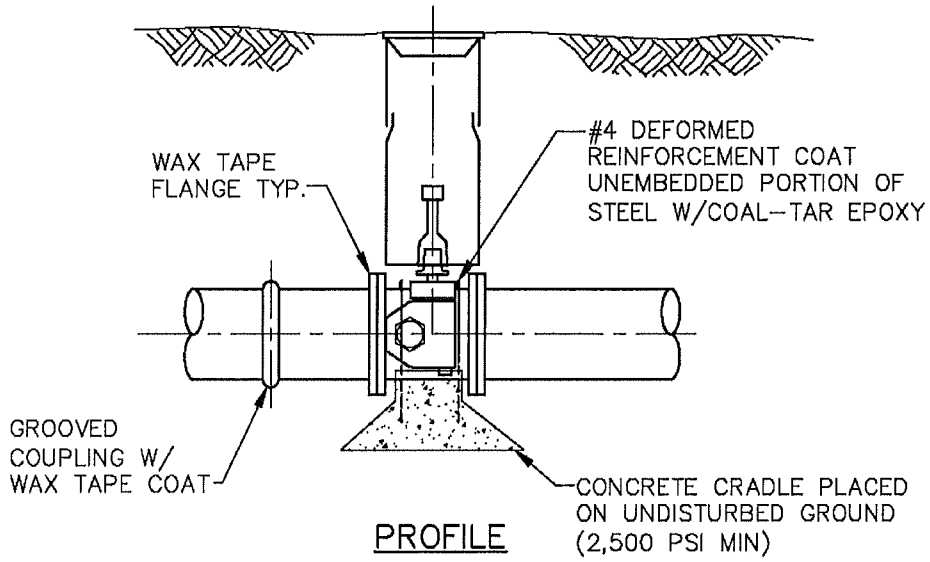

PROFILE

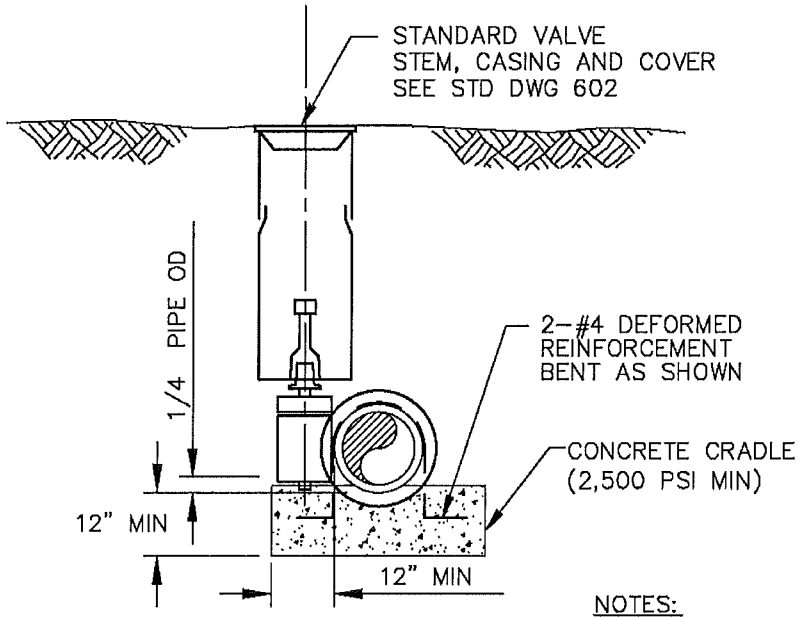

END VIEW

NOTES:

1. FOR STEEL PIPE BOND JOINTS PER STD DWG 902
2. COAT PER SPECS

REVISION	DATE	BY	DESCRIPTION
2	03/02	P&I	GENERAL
3	03/06	P&I	GENERAL
4	01/07	P&I	GENERAL

APPROVED Susan Mulligan Digitally signed by Susan Mulligan DN: cn=Susan Mulligan, c=US Date: 2007.02.15 16:19:43 -08'00'

MANAGER OF ENGINEERING DATE

CALLEGUAS MUNICIPAL WATER DISTRICT

THOUSAND OAKS CALIFORNIA

STANDARD DRAWINGS

BUTTERFLY VALVE

DWG NO

601

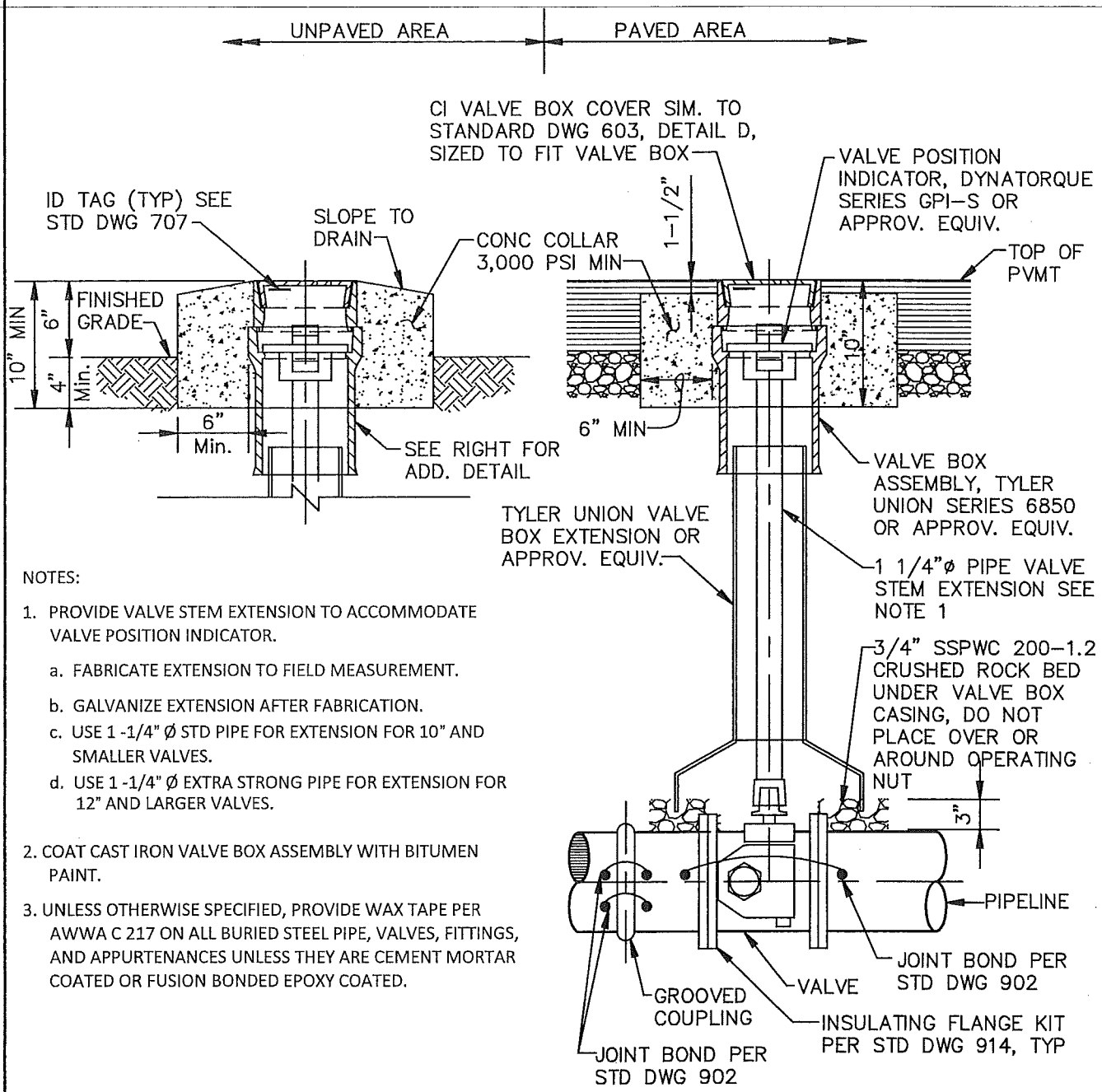

NOTES:

1. PROVIDE VALVE STEM EXTENSION TO ACCOMMODATE VALVE POSITION INDICATOR.
   a. FABRICATE EXTENSION TO FIELD MEASUREMENT.
   b. GALVANIZE EXTENSION AFTER FABRICATION.
   c. USE 1 -1/4" Ø STD PIPE FOR EXTENSION FOR 10" AND SMALLER VALVES.
   d. USE 1 -1/4" Ø EXTRA STRONG PIPE FOR EXTENSION FOR 12" AND LARGER VALVES.
2. COAT CAST IRON VALVE BOX ASSEMBLY WITH BITUMEN PAINT.
3. UNLESS OTHERWISE SPECIFIED, PROVIDE WAX TAPE PER AWWA C 217 ON ALL BURIED STEEL PIPE, VALVES, FITTINGS, AND APPURTENANCES UNLESS THEY ARE CEMENT MORTAR COATED OR FUSION BONDED EPOXY COATED.

REVISION	DATE	BY	DESCRIPTION
5	06/08	PAd	GENERAL
6	07/09	PAd	GENERAL
7	02/10	PAd	GENERAL

APPROVED Susan B. Mulligan 3/2/10
MANAGER OF ENGINEERING DATE

CALLEGUAS MUNICIPAL WATER DISTRICT
THOUSAND OAKS CALIFORNIA

STANDARD DRAWINGS
VALVE BOX AND COVER

DWG NO
602

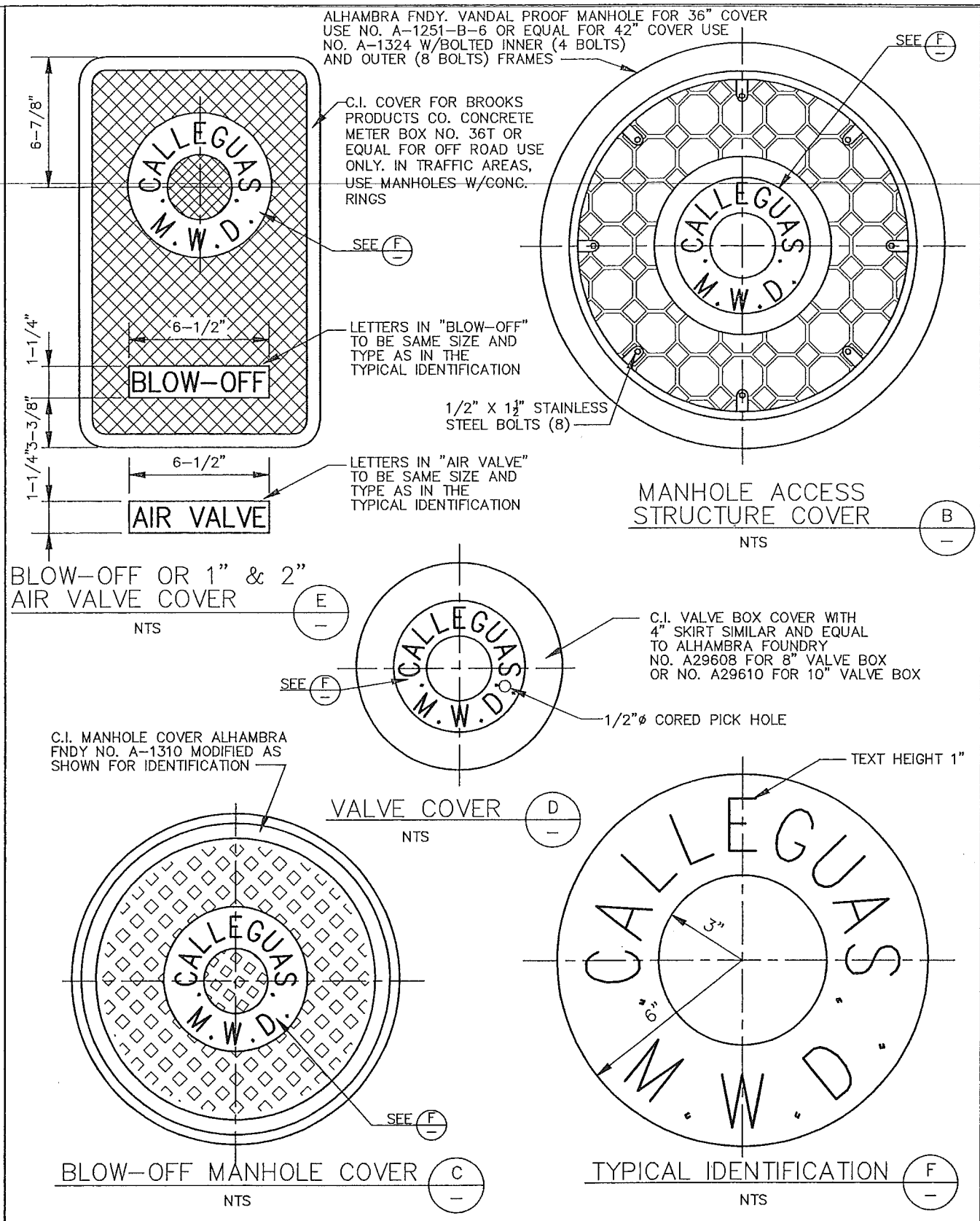

CAST IRON COVER IDENTIFICATION DETAILS

REVISION	DATE	BY	DESCRIPTION
3	03/06	P&d	GENERAL
4	12/08	P&d	ADD. 42" COVER
5	02/10	P&d	ADDED PICK HOLE

APPROVED Susan B. Mulligan 3/2/10
MANAGER OF ENGINEERING DATE

CALLEGUAS MUNICIPAL WATER DISTRICT
THOUSAND OAKS CALIFORNIA

STANDARD DRAWINGS
IDENTIFICATION DETAILS FOR CAST IRON COVERS

DWG NO
603

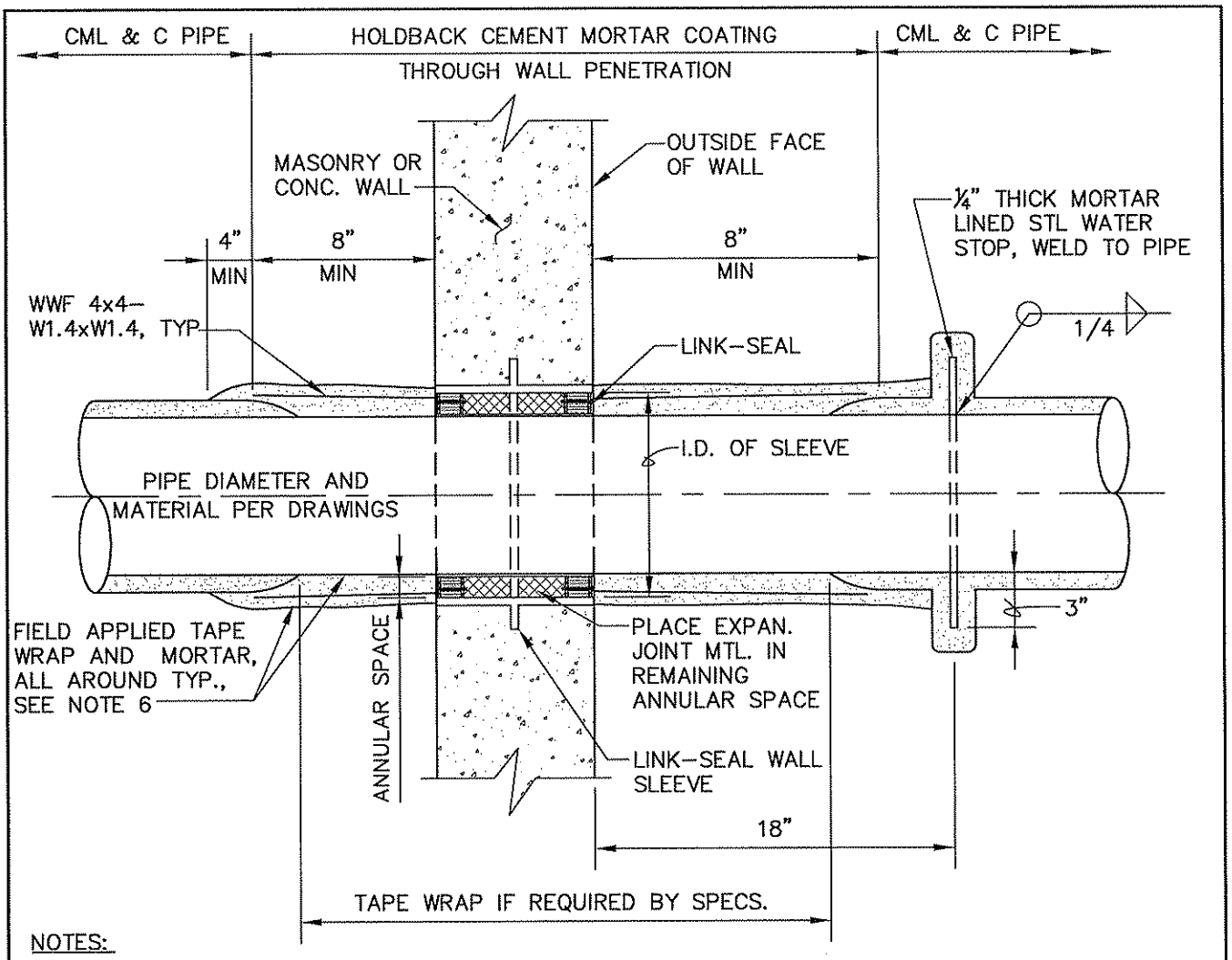

NOTES:

1. THIS TYPE OF WALL PENETRATION FOR CML & C PIPES SHALL BE PROVIDED WHERE SHOWN ON DRAWINGS AND WHERE GROUNDWATER IS ENCOUNTERED WITHIN THREE FEET OF INSTALLATION.

2. ANNULAR SPACE SHALL BE THE CLEAR DISTANCE FROM I.F. OF SLEEVE TO O.F. OF PIPE FINISHED SURFACE. ANNULAR SPACE SHALL NOT BE LESS THAN PIPE MORTAR COATING THICKNESS AND SHALL NOT BE GREATER THAN 2.4 IN.

3. CONTRACTOR SHALL SIZE THE SLEEVE AND PENETRATION HOLE SO THAT THE ANNULAR SPACE IS WITHIN REQUIRED DIMENSIONS.

4. MODELS OF LINK-SEAL SHALL BE SELECTED BASED ON MANUFACTURER'S RECOMMENDATION OR AS DIRECTED BY OWNER. LINK-SEAL APPARATUS SHALL BE INSTALLED ON BOTH THE INSIDE AND OUTSIDE FACE OF THE WALL. LINK-SEAL WALL SLEEVE SHALL BE CENTURY-LINE MODEL FOR PIPES 12 INCHES AND SMALLER AND WS MODEL FOR PIPES LARGER THAN 12 INCHES.

5. CONTRACTOR SHALL SUBMIT SHOP DRAWINGS FOR LINK-SEAL APPARATUS AND SLEEVE A MINIMUM OF 3 WEEKS PRIOR TO THE START OF CONSTRUCTION.

6. TAPE WRAP SHALL BE APPLIED ONLY WHEN USED FOR ADJOINING PIPE.

7. TAPE WRAPPED PIPE SURFACE SHALL BE SMOOTH AND EVEN.

8. EXPANSION JOINT MATERIAL SHALL BE HORNBOARD AS MANUFACTURED BY TAMMS IND.

REVISION	DATE	BY	DESCRIPTION
4	03/06	PAd	GENERAL
5	08/08	PAd	GENERAL
6	04/09	PAd	GENERAL

APPROVED SB Mulligan 10/21/09
MANAGER OF ENGINEERING DATE

CALLEGUAS MUNICIPAL WATER DISTRICT
THOUSAND OAKS CALIFORNIA

STANDARD DRAWINGS
WALL PENETRATION FOR CML&C PIPES NEAR GROUNDWATER

DWG NO
703A

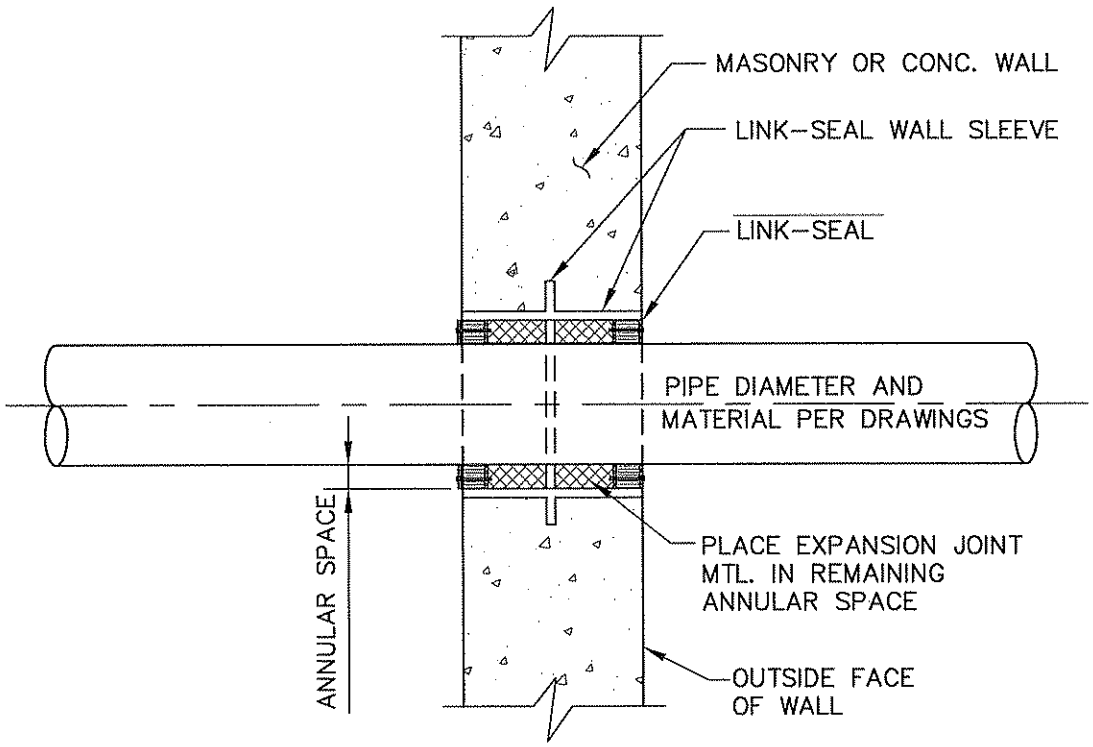

NOTES:

1. THIS TYPE OF WALL PENETRATION FOR NON-CML & C PIPES & CONDUITS SHALL BE PROVIDED WHERE SHOWN OR DRAWINGS AND WHERE GROUNDWATER IS ENCOUNTERED WITHIN THREE FEET OF INSTALLATION.

2. ANNULAR SPACE SHALL BE THE CLEAR DISTANCE FROM I.F. OF SLEEVE TO O.F. OF PIPE FINISHED SURFACE. ANNULAR SPACE SHALL NOT BE LESS THAN 0.6 IN. AND SHALL NOT BE GREATER THAN 2.4 IN.

3. CONTRACTOR SHALL SIZE PENETRATION HOLE SO THAT THE ANNULAR SPACE IS WITHIN REQUIRED DIMENSIONS.

4. MODELS OF LINK-SEAL AND SLEEVE SHALL BE SELECTED BASED ON MANUFACTURER'S RECOMMENDATION OR AS DIRECTED BY OWNER. LINK-SEAL APPARATUS SHALL BE INSTALLED FROM OUTSIDE FACE OF WALL AS DIRECTED BY MANUFACTURER OR AS DIRECTED BY OWNER. LINK-SEAL WALL SLEEVE SHALL BE CENTURY-LINE MODEL FOR PIPES 12 INCHES AND SMALLER AND WS MODEL FOR PIPES LARGER THAN 12 INCHES.

5. CONTRACTOR SHALL SUBMIT SHOP DRAWINGS FOR LINK-SEAL APPARATUS AND SLEEVE A MINIMUM OF 3 WEEKS PRIOR TO THE START OF CONSTRUCTION.

6. EXPANSION JOINT MATERIAL SHALL BE HORNBOARD AS MANUFACTURED BY TAMMS IND.

REVISION	DATE	BY	DESCRIPTION
4	03/06	P&I	GENERAL
5	01/07	P&I	GENERAL
6	04/09	P&I	GENERAL

APPROVED: B Mulligan 10/21/09
MANAGER OF ENGINEERING DATE

CALLEGUAS MUNICIPAL WATER DISTRICT
THOUSAND OAKS CALIFORNIA

STANDARD DRAWINGS
WALL PENETRATION FOR PIPES & CONDUITS NON-CML&C NEAR GROUNDWATER

DWG NO
703B

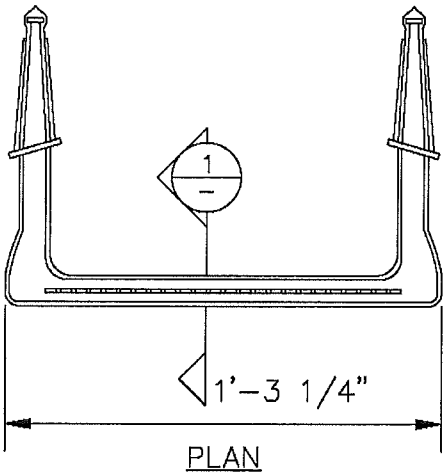

PLAN

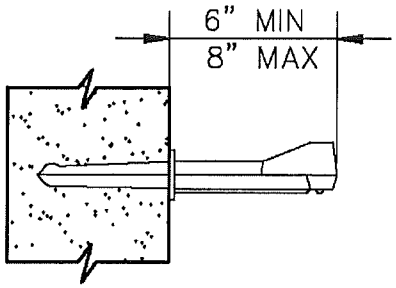

SIDE ELEVATION

CAST-IN-PLACE

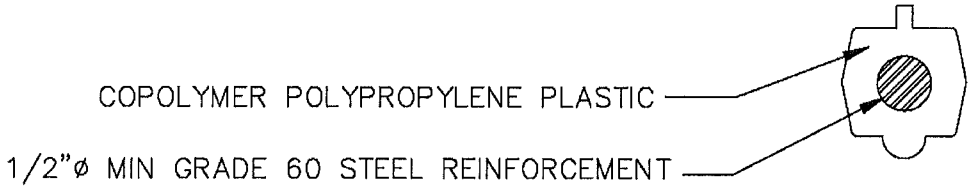

SECTION 1-1

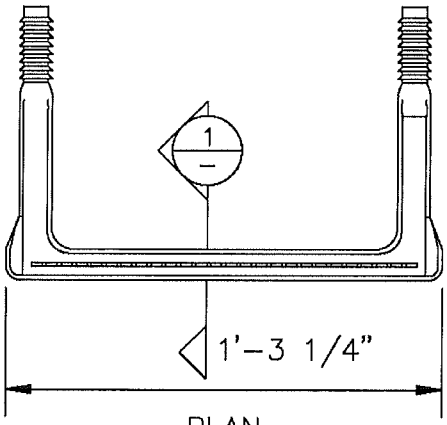

PLAN

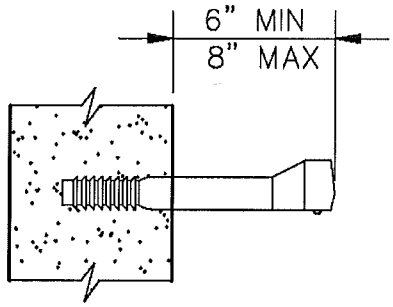

SIDE ELEVATION

NOTE:
DRILLEN-INPLACE STEP SHALL BE MA INDUSTRIES MODEL PS3-PFC OR APPROVED EQUIV.

DRILLED-IN-PLACE

REVISION	DATE	BY	DESCRIPTION
1	03/02	P&d	GENERAL
2	01/07	P&d	GENERAL

APPROVED Susan Mulligan Digitally signed by Susan Mulligan DN: cn=Susan Mulligan, c=US Date: 2007.02.16 16:21:25 -08'00'
MANAGER OF ENGINEERING DATE

CALLEGUAS MUNICIPAL WATER DISTRICT
THOUSAND OAKS CALIFORNIA

STANDARD DRAWINGS
STEP DETAIL

DWG NO
706

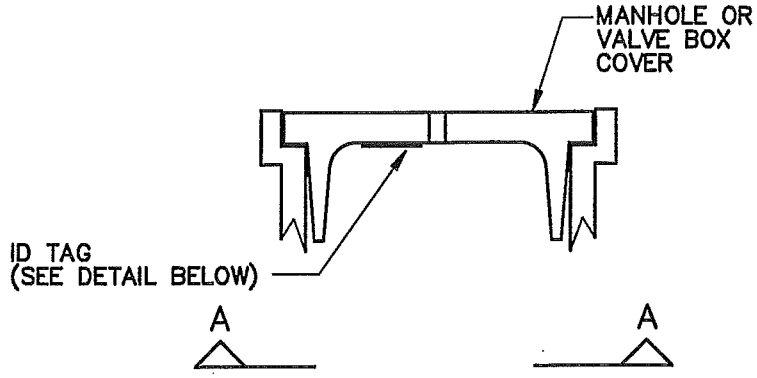

SECTION
NTS

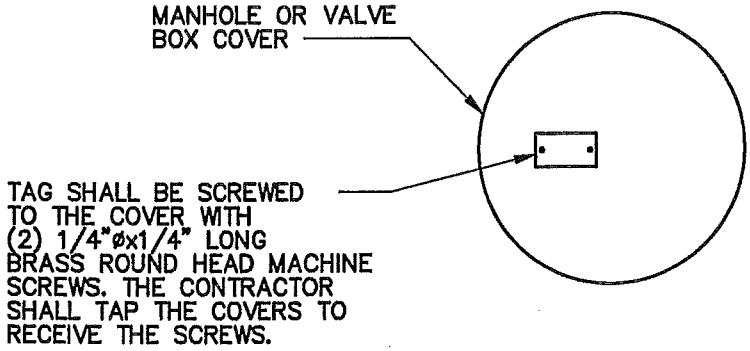

SECTION A–A
NTS

NOTES:

1. THE CONTRACTOR SHALL VERIFY VALVE DATA WITH THE VALVE MANUFACTURER PRIOR TO STAMPING ID TAG.
2. ID TAG SHALL BE INSTALLED ON UNDERSIDE OF ALL NEW MANHOLE OR VALVE BOX COVERS.

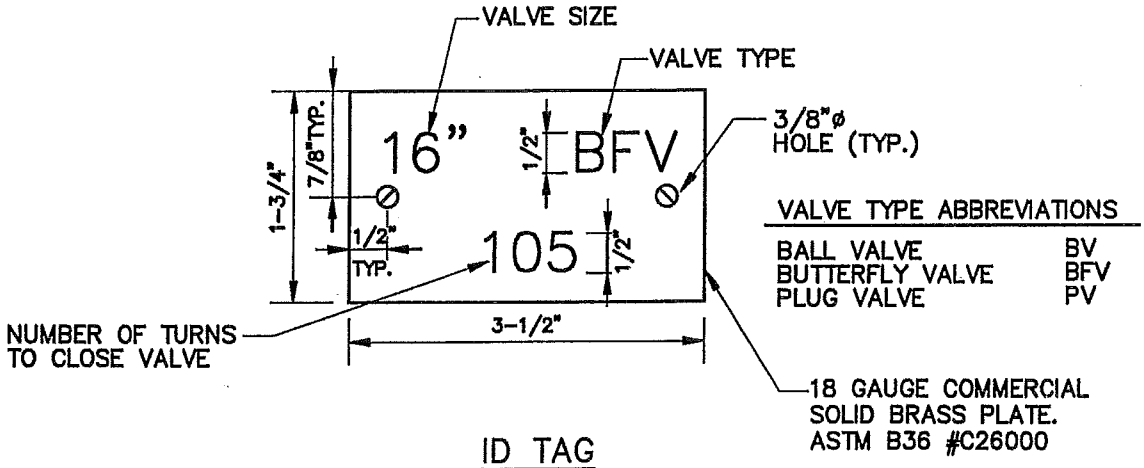

VALVE TYPE ABBREVIATIONS

BALL VALVE	BV
BUTTERFLY VALVE	BFV
PLUG VALVE	PV

ID TAG
NTS

REVISION	DATE	BY	DESCRIPTION
1	07/99	CDM	GENERAL
2	03/02	P&d	GENERAL
3	03/06	P&d	GENERAL

APPROVED S. Mulligan 3/14/06 Digitally signed by S. Mulligan 3/14/06 DN: CN = S. Mulligan 3/14/06, C = US, O = Calleguas MWD, OU = Engineering Date: 2006.03.14 08:40:54 -08'00'

MANAGER OF ENGINEERING DATE

CALLEGUAS MUNICIPAL WATER DISTRICT

THOUSAND OAKS CALIFORNIA

STANDARD DRAWINGS

IDENTIFICATION TAG FOR MANHOLE LID AND VALVE BOX COVER

DWG NO 707

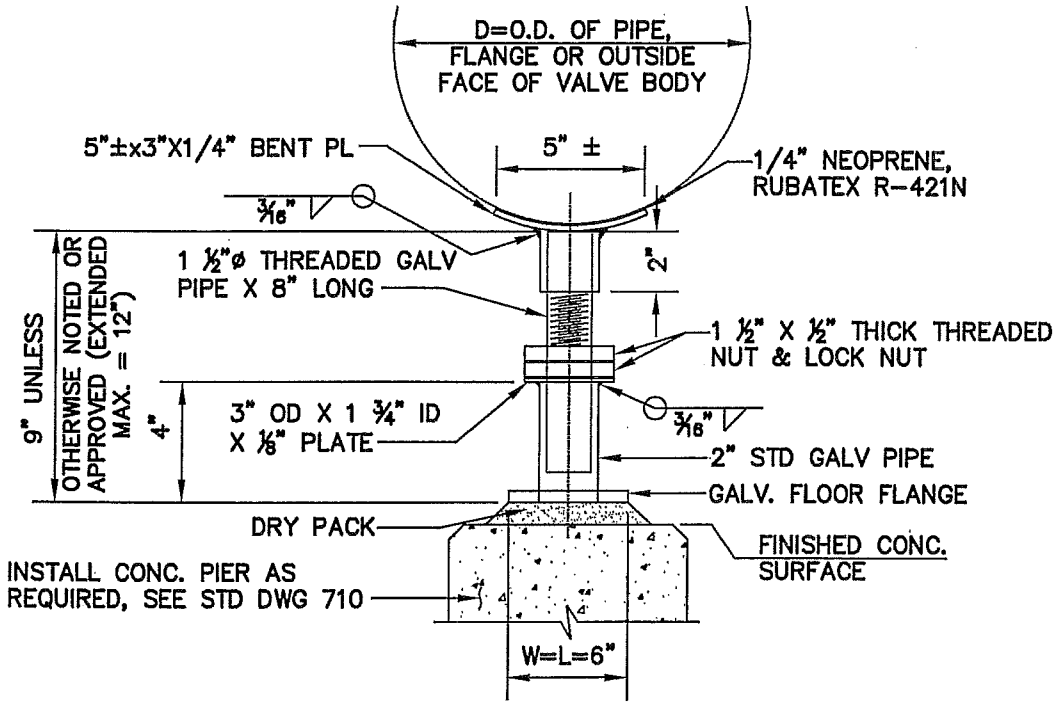

$D \leq 8"$

NOTES:

1. GALVANIZE SUPPORT ASSEMBLY AFTER FABRICATION.
2. PAINT SUPPORT ASSEMBLY AS PER SPECIFICATIONS.
3. THIS PIPE SUPPORT DETAIL IS FOR AVAILABLE ADJUSTMENT HEIGHT OF BETWEEN 9¼" TO 11¼" FROM BOTTOM OF PIPE TO FLOOR FLANGE

REVISION	DATE	BY	DESCRIPTION
2	03/02	Pdd	GENERAL
3	11/04	Pdd	GENERAL
4	03/06	Pdd	GENERAL

S. Mulligan 3/14/06 Digitally signed by S. Mulligan 3/14/06 DN: CN = S. Mulligan 3/14/06, C = US, O = Calleguas MWD, OU = Engineering Date: 2006.03.14 08:41:21 -08'00'

APPROVED

MANAGER OF ENGINEERING DATE

CALLEGUAS MUNICIPAL WATER DISTRICT

THOUSAND OAKS CALIFORNIA

STANDARD DRAWINGS

SUPPORT FOR PIPES AND FLANGES < 8" DIA.

DWG NO

708A

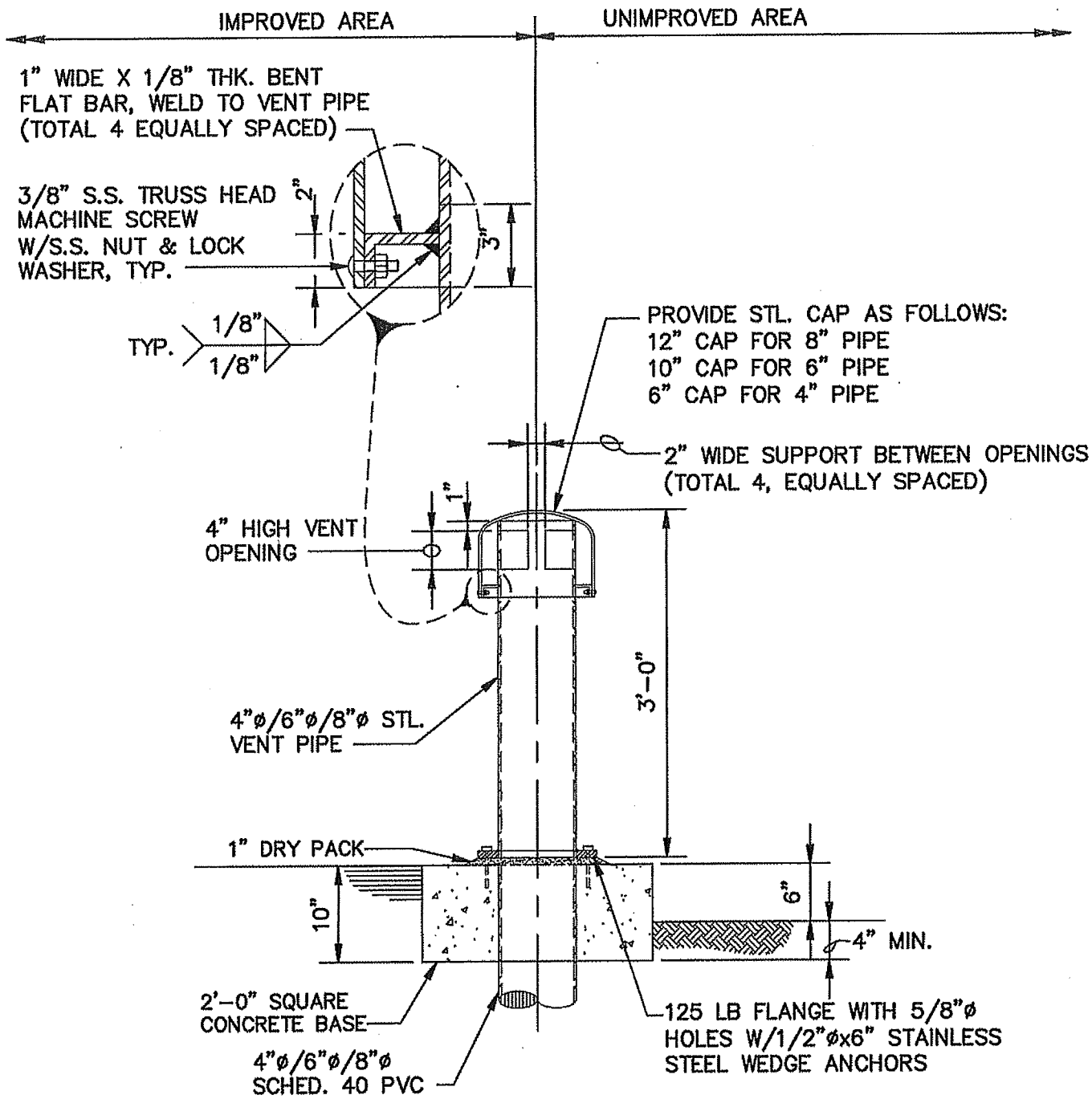

NOTES:

1. GALVANIZE STEEL ASSEMBLY AFTER FABRICATION. PAINT STEEL ASSEMBLY WITH TNEMEC SERIES L140F(3.0 MILS MDFT) AND TOP COAT WITH TNEMEC SERIES 1081(3.0 MILLS MDFT) OR AN APPROVED EQUIVALENT. COLOR SHALL BE ADOBE.
2. PIPE SHALL BE THE THINNEST CYLINDER OF SCHEDULE 20 OR 40 STEEL.
3. VENT CAP TO REST ON TOP OF VENT PIPE.

PIPE VENT DETAIL

REVISION	DATE	BY	DESCRIPTION
0	04/09	P&I	NEW ISSUE

APPROVED Susan B. Mulligan 5/6/09
MANAGER OF ENGINEERING DATE

CALLEGUAS MUNICIPAL WATER DISTRICT
THOUSAND OAKS CALIFORNIA

STANDARD DRAWINGS
FULL VENTING STEEL PIPE VENT

DWG NO
709B

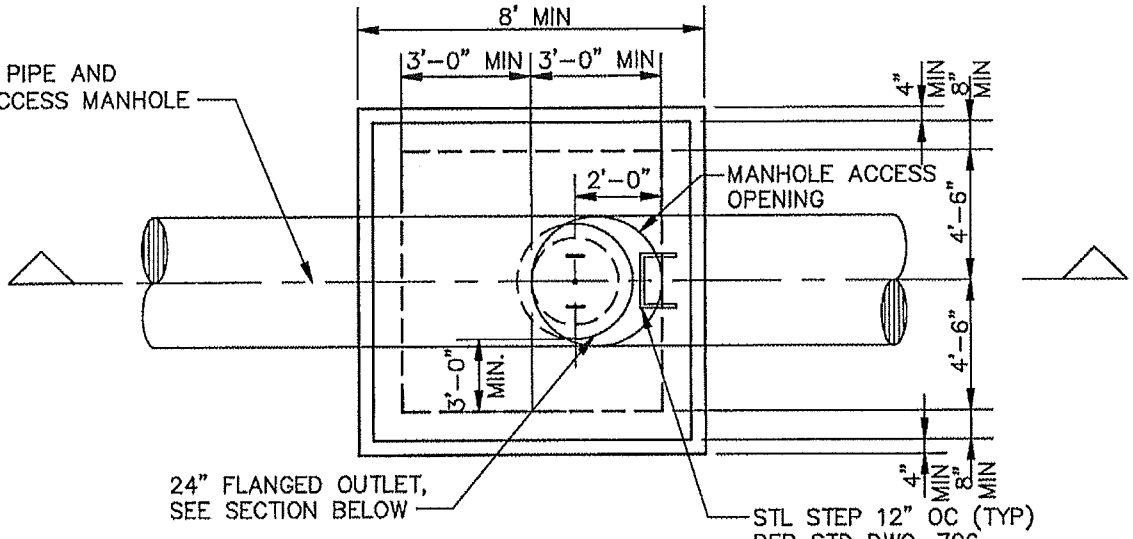

PLAN

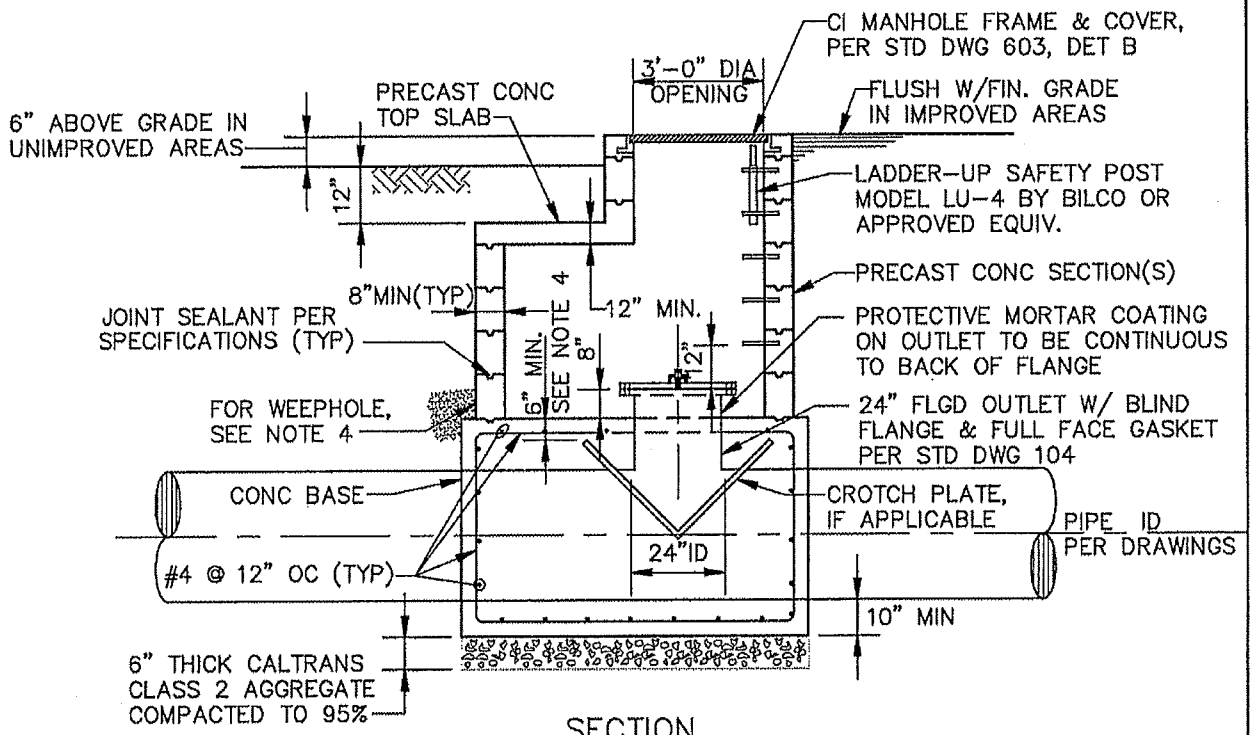

SECTION

NOTES:

1. FOR CATHODIC TEST STATION AT MANHOLE, SEE STD DWG 904.
2. WATERPROOF OUTSIDE MANHOLE STRUCTURE WITH CRYSTALLINE AS MANUFACTURED BY PERMAQUIK OR APPROV. EQUIV.
3. 6" MINIMUM DISTANCE FROM TOP OF PIPE OR CROTCH PLATE (SINGLE OR DOUBLE) TO TOP OF CONCRETE BASE.
4. INSTALL 2-2" DIAMETER WEEPHOLES ONLY IF CALLED FOR IN THE CONTRACT DOCUMENTS OR SPECIFICALLY CALLED FOR BY CALLEGUAS. WEEPHOLES SHALL BE INSTALLED IN THE VAULT WALL, ON OPPOSITE WALLS AND 2" ABOVE THE VAULT FLOOR. INSTALL 1 CU FT OF GRAVEL WRAPPED IN GEOTEXTILE FILTER FABRIC OUTSIDE OF EACH WEEPHOLE.

REVISION	DATE	BY	DESCRIPTION
7	11/06	P&d	GENERAL
8	12/06	P&d	GENERAL
9	01/08	P&d	MOD. WEEPHOLES

APPROVED S.B. Mulligan 4/23/08
MANAGER OF ENGINEERING DATE

CALLEGUAS MUNICIPAL WATER DISTRICT
THOUSAND OAKS CALIFORNIA

STANDARD DRAWINGS
MANHOLE ACCESS STRUCTURE

DWG NO
711A

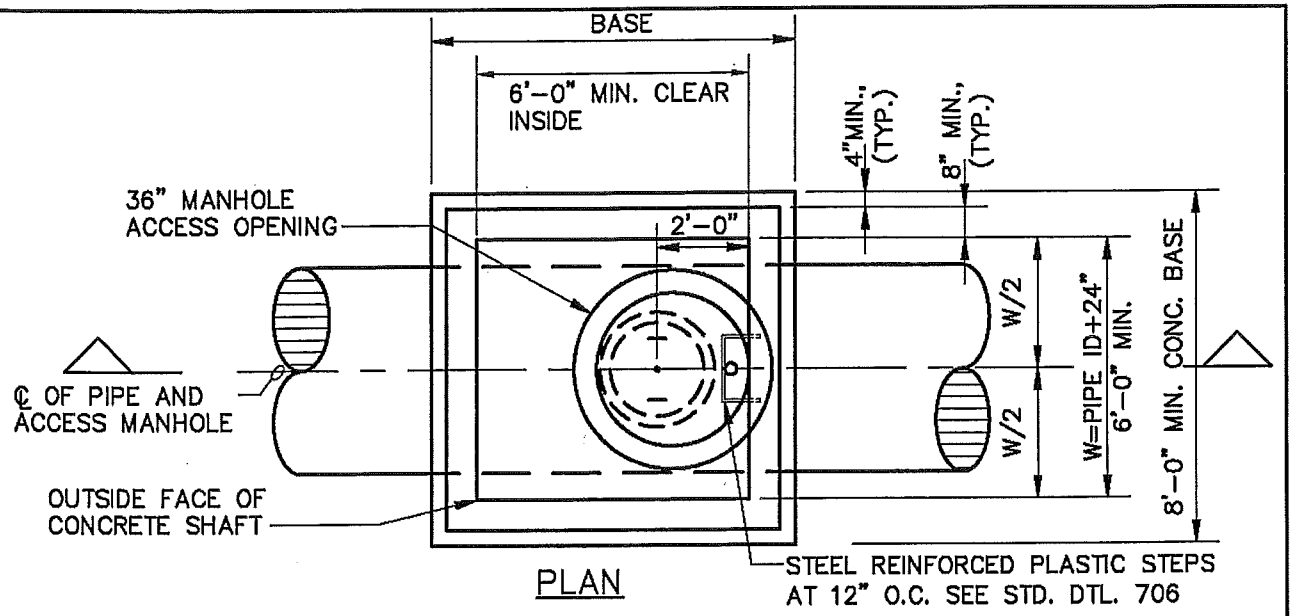

PLAN

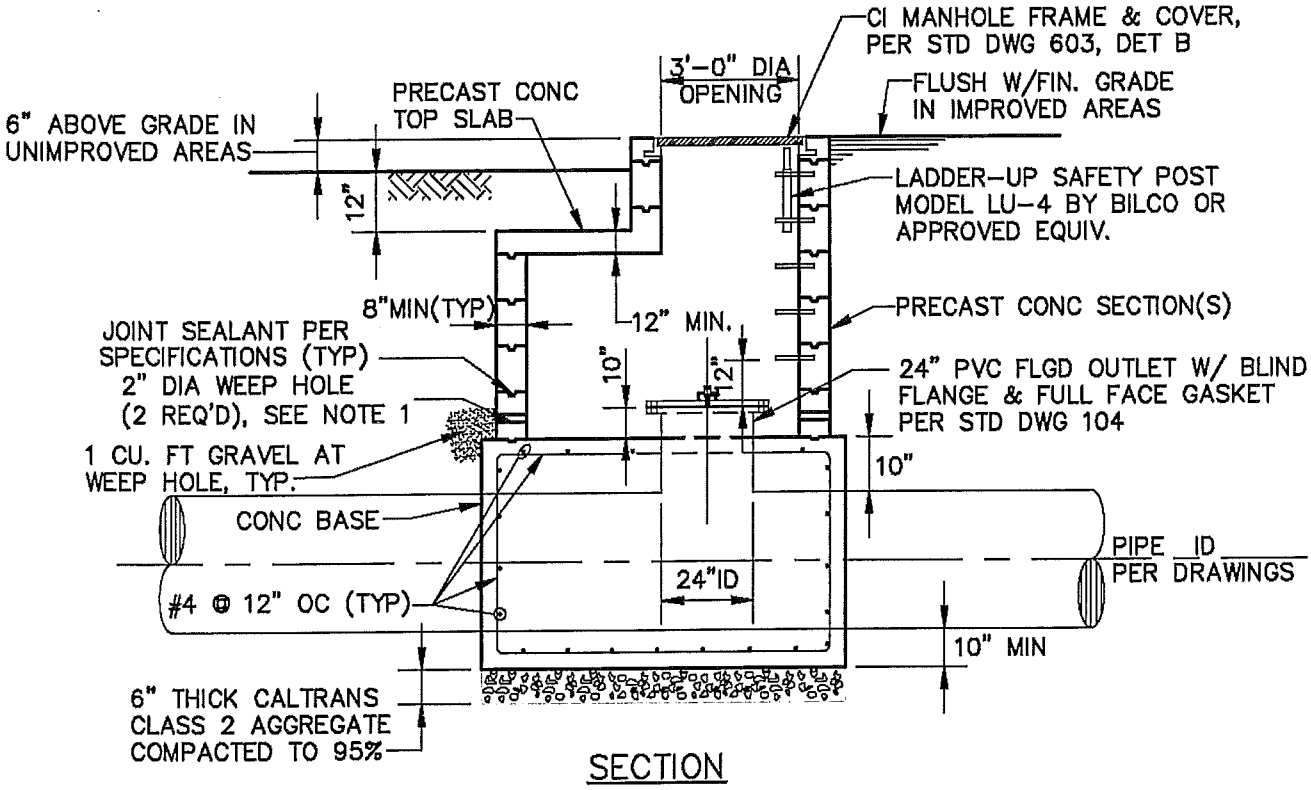

SECTION

NOTES:

1. PROVIDE WEEPHOLES WHERE WATER TABLE IS BELOW BOTTOM OF PIPE & AS DIRECTED BY OWNER, DO NOT WATERPROOF IF WEEPHOLES ARE PROVIDED.
2. WATERPROOF OUTSIDE MANHOLE STRUCTURE WITH CRYSTALLINE AS MANUFACTUERED BY PERMAQUIK OR APPROVED EQUIVALENT.
3. TAPE WRAP ALL STEEL PER SPECIFICATIONS (OR AWWA C217 IF NOT SPECIFIED).

REVISION	DATE	BY	DESCRIPTION
2	12/06	P&I	GENERAL

APPROVED Susan Mulligan Digitally signed by Susan Mulligan DN: cn=Susan Mulligan, c=US Date: 2006.12.21 09:21:27 -08'00'
MANAGER OF ENGINEERING DATE

CALLEGUAS MUNICIPAL WATER DISTRICT
THOUSAND OAKS CALIFORNIA

STANDARD DRAWINGS
PVC PIPE MANHOLE ACCESS STRUCTURE

DWG NO
711B

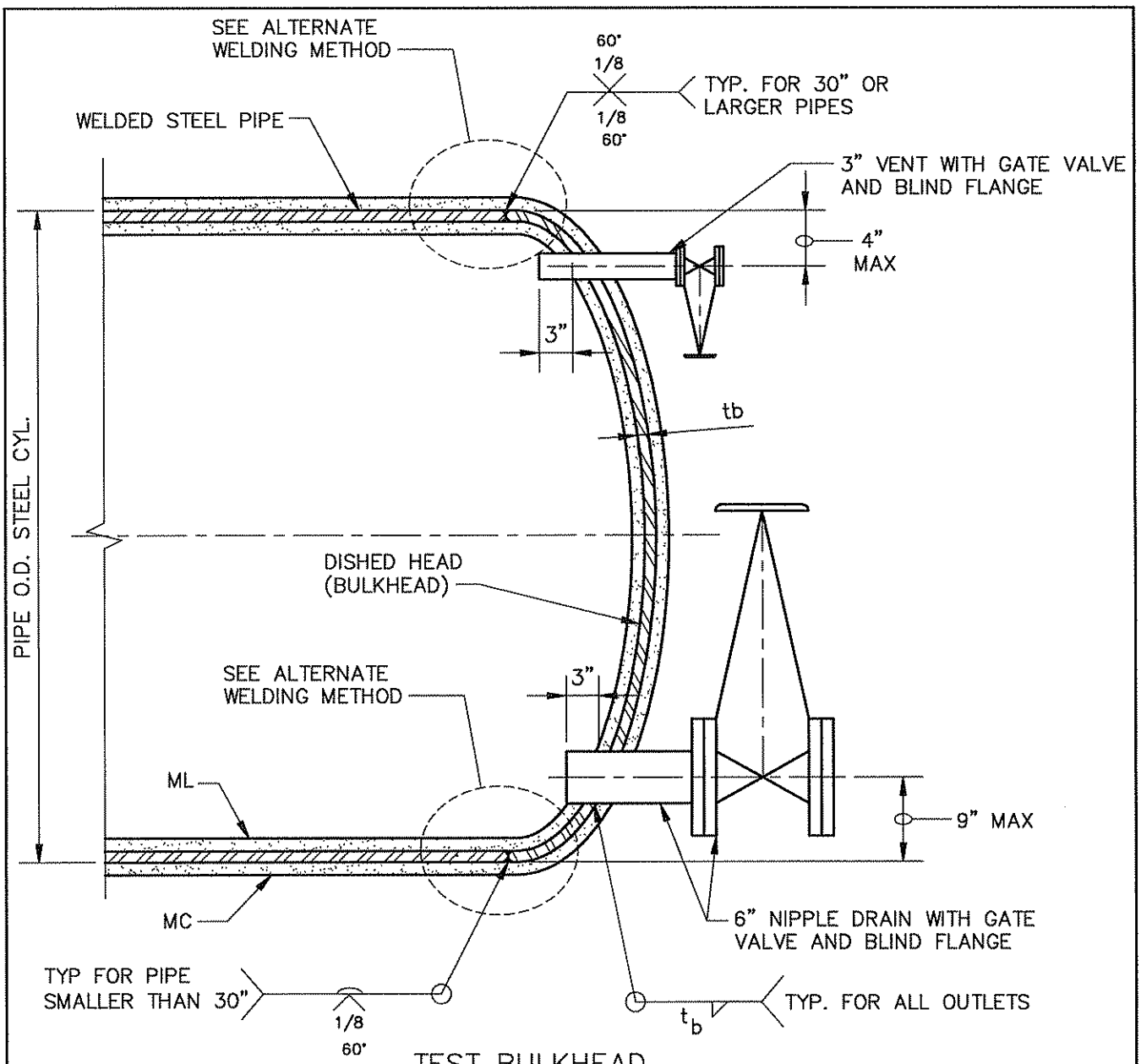

TEST BULKHEAD

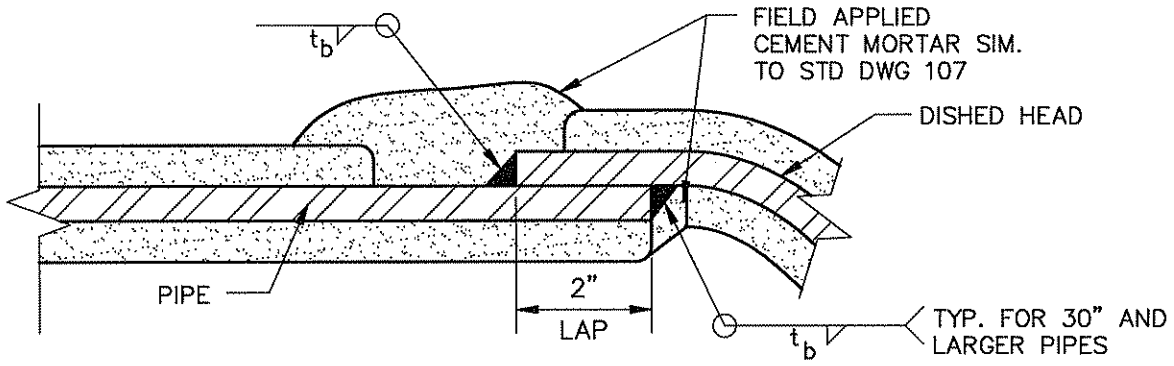

ALTERNATE WELDING METHOD

REVISION	DATE	BY	DESCRIPTION
1	08/09	P&J	NEW ISSUE

APPROVED SBMulligan 10/21/09
MANAGER OF ENGINEERING DATE

CALLEGUAS MUNICIPAL WATER DISTRICT
THOUSAND OAKS CALIFORNIA

STANDARD DRAWINGS
TEST BULKHEAD FOR 24" THRU 72" PIPE

DWG NO 803
SHEET 1 OF 2

NOTES:

GENERAL

1. DISHED HEAD SHALL BE ELLIPSOIDAL OR TORI-SPHERICAL DESIGNED FOR TEST PRESSURE APPLIED TO EITHER SIDE IN ACCORDANCE WITH ASME CODE FOR UNFIRED PRESSURE VESSELS.

2. VENT AND DRAIN NIPPLE SHALL BE STANDARD WEIGHT STEEL PIPES.

3. ALL VALVES AND FLANGES SHALL BE PRESSURE RATED TO TEST PRESSURE OR MORE.

PERMANENT BULKHEAD

1. PERMANENT BULKHEADS AS NOTED ON DESIGN DRAWINGS SHALL BE LEFT IN PLACE.

2. DISHED HEAD SHALL BE CEMENT MORTAR LINED AND COATED.

3. VENT AND DRAIN NIPPLES SHALL BE CEMENT MORTAR LINED AND EPOXY PAINTED.

4. ALL EXPOSED STEEL SURFACES SHALL BE TAPE COATED AS PER TECHNICAL SPECIFICATIONS.

TEMPORARY BULKHEAD

1. PERMANENT BULKHEAD SHALL BE PROVIDED AS SHOWN ON DESIGN DRAWINGS AND AS REQUIRED FOR PRESSURE TESTING OF PIPES.

2. AFTER SUCCESSFUL PRESSURE TESTING, TEMPORARY BULKHEAD SHALL BE REMOVED BY CUTTING PIPE APPROXIMATELY 1" FROM WELDED CONNECTION.

REVISION	DATE	BY	DESCRIPTION
1	08/09	P&I	NEW ISSUE

APPROVED SB Mulligan 10/21/09
MANAGER OF ENGINEERING DATE

CALLEGUAS MUNICIPAL WATER DISTRICT
THOUSAND OAKS CALIFORNIA

STANDARD DRAWINGS
TEST BULKHEAD FOR 24" THRU 72" PIPE

DWG NO 803
SHEET 2 OF 2

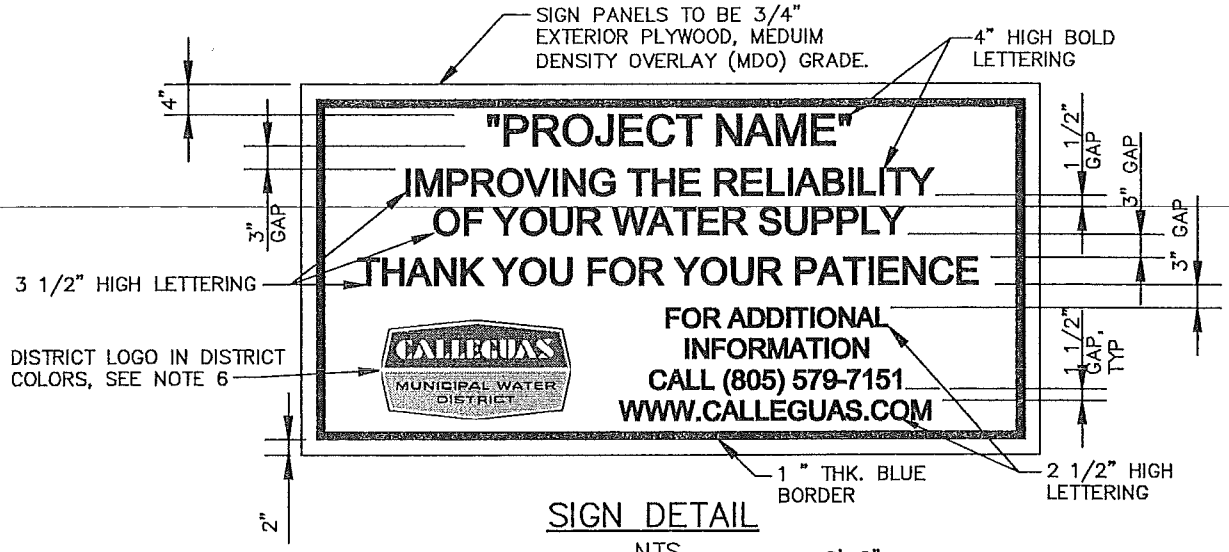

SIGN DETAIL

NTS

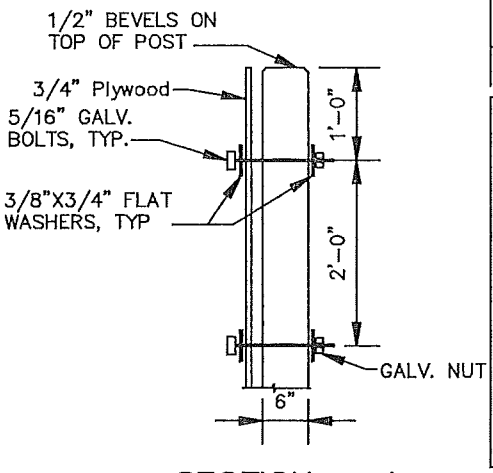

SECTION – 1

NTS

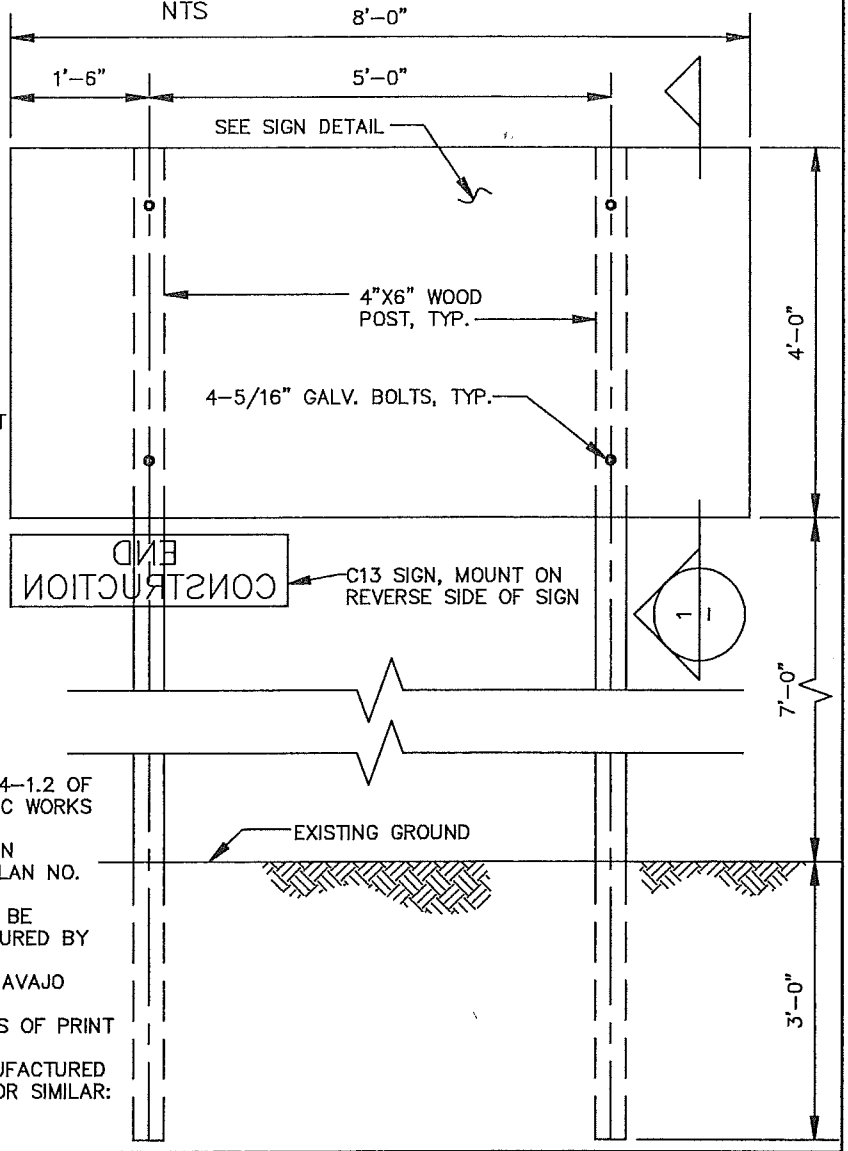

NOTES:

1. ALL LUMBER SHALL CONFORM TO SEC. 204-1.2 OF THE "STANDARD SPECIFICATIONS FOR PUBLIC WORKS CONSTRUCTION", LATEST EDITION.
2. POSTS SHALL HAVE BREAKAWAY FEATURE IN ACCORDANCE WITH CALTRANS STANDARD PLAN NO. R52
3. THE BORDER AND LETTERING COLOR SHALL BE "PRECAUTION BLUE #10-22" AS MANUFACTURED BY DUNN-EDWARDS.
4. BACKGROUND COLOR OF SIGN SHALL BE "NAVAJO WHITE".
5. SUBMIT SIGN LAYOUT INCLUDING DIMENSIONS OF PRINT & GRAPHICS PRIOR TO FABRICATION.
6. DISTRICT LOGO COLORS SHALL BE AS MANUFACTURED BY DUNN-EDWARDS AND BE AS FOLLOWS OR SIMILAR:
   TOP PORTION COLOR-DEA 137
   BOTTOM PORTION COLOR-DE 5863

REVISION	DATE	BY	DESCRIPTION
NEW	11/07	P&d	NEW STANDARD ISSUE
1	1/08	P&d	GENERAL
2	02/10	P&d	GENERAL

APPROVED Susan B. Mulligan 2/5/10
MANAGER OF ENGINEERING DATE

CALLEGUAS MUNICIPAL WATER DISTRICT

THOUSAND OAKS CALIFORNIA

STANDARD DRAWINGS

STANDARD PROJECT SIGN

DWG NO

811

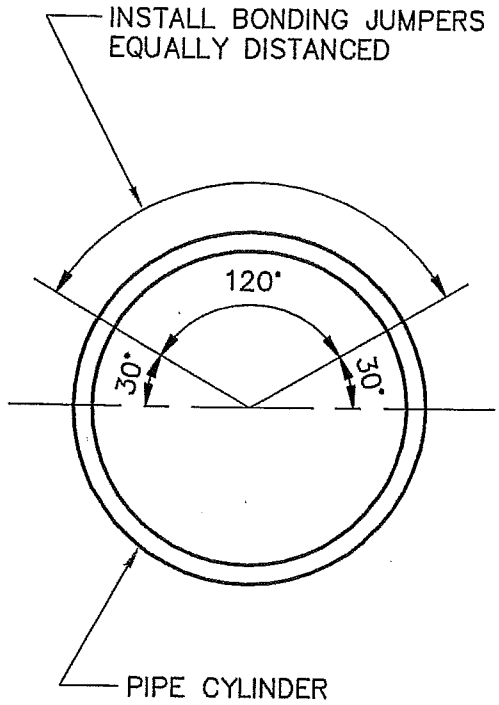

LOCATIONS OF BONDING JUMPERS

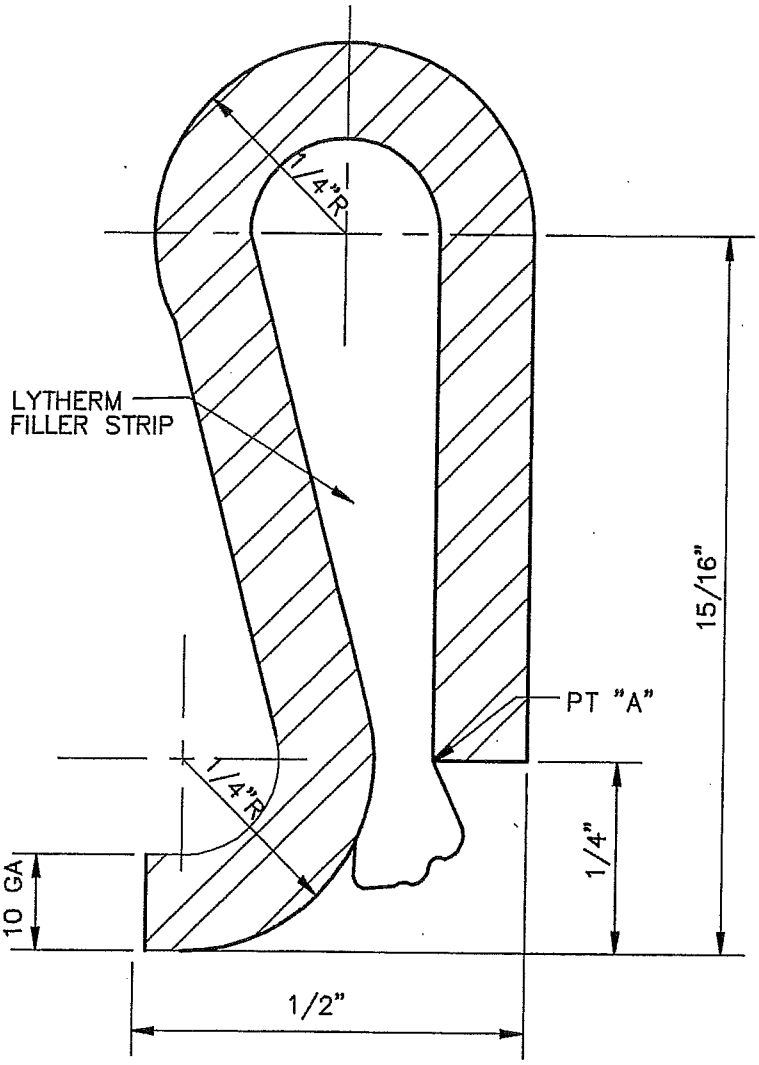

NUMBER OF BONDING JUMPERS REQUIRED:

*t(IN)	20' LENGTH	30' AND 40' LENGTHS
0.225	3	2
0.250	3	2
0.312	4	3
0.372	4	3
0.415	4	3
0.500	5	4

* STEEL CYLINDER THICKNESS

NOTES

1. MATERIAL SPECIFICATION – ASTM A336 (COMMERCIAL QUALITY)
   CUT LENGTH – 2 1/2" ±1/16".
   WIDTH – 1 1/4" ±1/16"
2. LYTHERM FILLER STRIP TO BE 1"X1 1/2" WIDE TO OVERLAP SIDES OF JUMPER.
3. CRIMP BONDING JUMPER OVER FILLER AT PT "A" TO COMPRESS FILLER.

REVISION	DATE	BY	DESCRIPTION
1	7/99	CDM	GENERAL
2	3/02	P&d	GENERAL

APPROVED Susan B. Mulligan 4/25/02
MANAGER OF ENGINEERING DATE

CALLEGUAS MUNICIPAL WATER DISTRICT
THOUSAND OAKS CALIFORNIA

STANDARD DRAWINGS
BONDING JUMPER

DWG NO
901

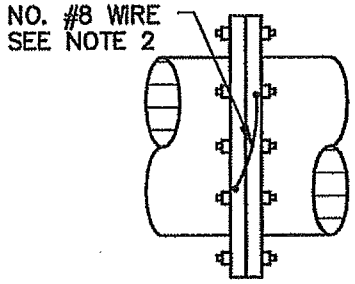

NON-INSULATED FLANGE

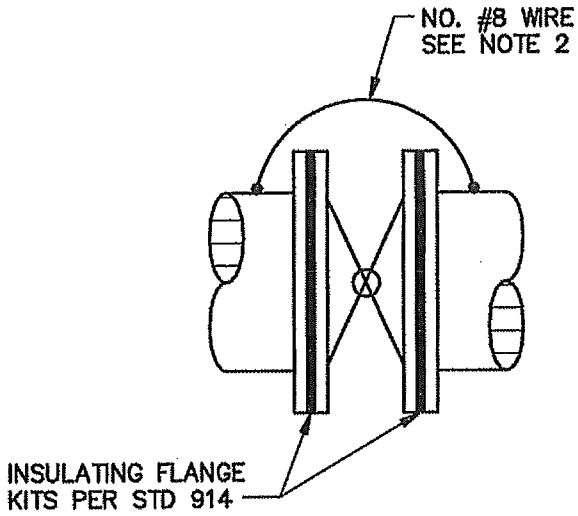

VALVE

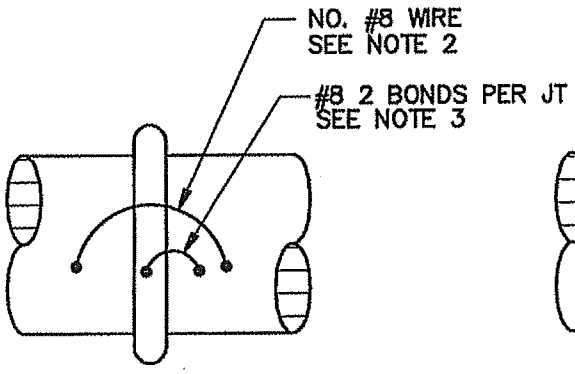

GROOVED COUPLING

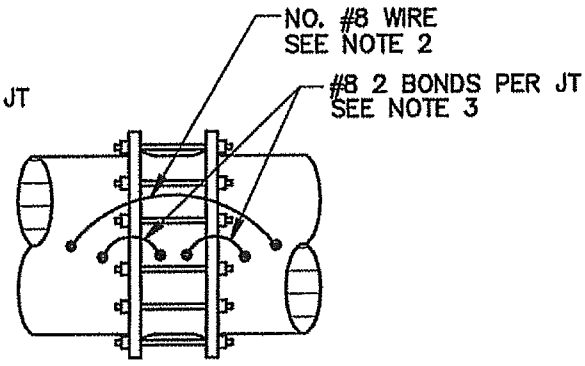

FLEXIBLE COUPLING
SHOULDER HARNESS COUPLING

NOTES:

1. PROVIDE THIS JOINT BONDING DETAIL AT ALL FLEXIBLE COUPLINGS, GROOVED COUPLINGS, VALVES AND NON-INSULATED FLANGED JOINTS.
2. INSTALL BOND CABLES. USE SAME NUMBER OF CABLES AS CLIPS, SEE STD DWG 901.
3. NO. 8 BONDS REQ'D FOR BURIED PIPE ONLY.
4. ATTACH WIRES PER STD DWG 910.
5. ALL WIRES SHALL BE THWN.
6. IF FITTING IS BURIED, WRAP ALL NON-MORTAR COATED PARTS WITH WAX TAPE PER AWWA C217.

REVISION	DATE	BY	DESCRIPTION
1	07/99	PAd	GENERAL
2	03/02	PAd	GENERAL
3	05/09	PAd	ADD VALVE JUMPER & GENERAL

APPROVED Susan B. Mulligan 5/6/09
MANAGER OF ENGINEERING DATE

CALLEGUAS MUNICIPAL WATER DISTRICT
THOUSAND OAKS CALIFORNIA

STANDARD DRAWINGS
TYPICAL JOINT BONDING

DWG NO
902

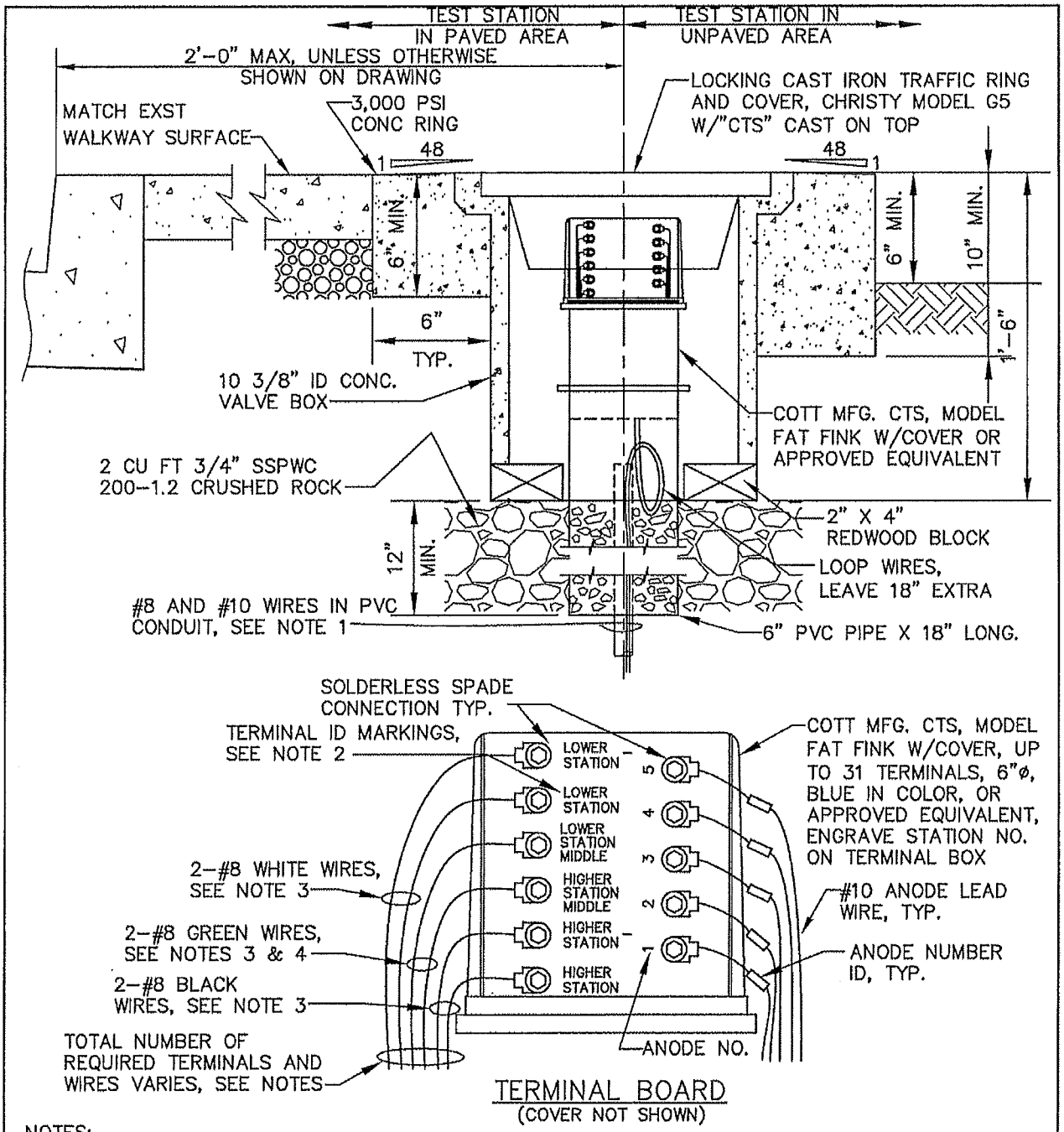

TERMINAL BOARD
(COVER NOT SHOWN)

NOTES:

1. ALL CONDUITS SHALL BE SCHED. 80 PVC ELECTRICAL CONDUIT SIZED BY CONTRACTOR OR AS DIRECTED BY OWNER. CONDUIT SHALL BE TERMINATED WITHIN 2' OF WIRE TO PIPE ATTACHMENT. USE 18" MIN. SWEEPS. INSTALL CHAFING BUSHING AT CONDUIT ENDS TO PREVENT WIRE DAMAGE.
2. TERMINAL ID MARKINGS SHALL BE NEATLY ENGRAVED ONTO TERMINAL BOARD .
3. 1-#8 WHITE (LOWER STATION), 1-#8 BLACK (HIGHER STATION) AND 1-#8 GREEN WIRES SHALL BE OMITTED FOR INSTALLATIONS WHERE IR DROP STATION IS NOT REQUIRED.
4. GREEN (MIDDLE) WIRES SHALL BE USED FOR BURIED VALVE INSTALLATIONS, SEE STD. DWG. 905.
5. TEST STATION SHALL BE LOCATED IN SIDEWALK IF AVAILABLE AND SHALL NOT BE PLACED IN TRAVELLED WAY.

REVISION	DATE	BY	DESCRIPTION
1	11/04	P&I	GENERAL
2	08/06	P&I	GENERAL
3	02/08	P&I	ADD PROTECTIVE COVER

APPROVED SBMulliner 4/23/08
MANAGER OF ENGINEERING DATE

CALLEGUAS MUNICIPAL WATER DISTRICT
THOUSAND OAKS CALIFORNIA

STANDARD DRAWINGS
CATHODIC TEST STATION TERMINAL BOX AT ANODE GROUP

DWG NO
903A

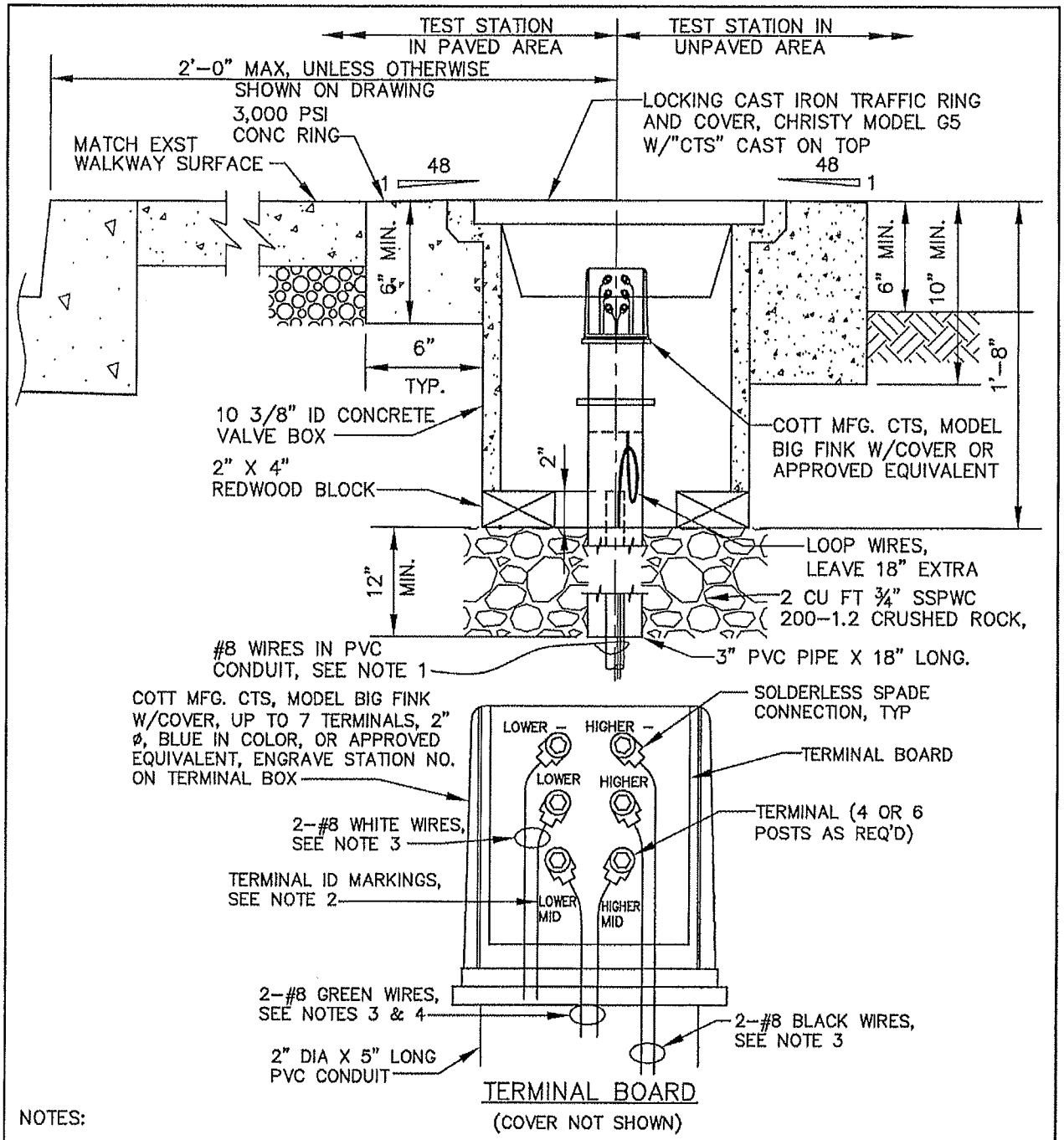

TERMINAL BOARD

(COVER NOT SHOWN)

NOTES:

1. ALL CONDUITS SHALL BE SCHED. 80 PVC ELECTRICAL CONDUIT SIZED BY CONTRACTOR OR AS DIRECTED BY OWNER. CONDUIT SHALL BE TERMINATED WITHIN 2' OF WIRE TO PIPE ATTACHMENT. USE 18" MIN. SWEEPS. INSTALL CHAFING BUSHING AT CONDUIT ENDS TO PREVENT WIRE DAMAGE.
2. TERMINAL ID MARKINGS SHALL BE NEATLY ENGRAVED ONTO TERMINAL BOARD.
3. 1-#8 WHITE (LOWER STATION), 1-#8 BLACK (HIGHER STATION) AND 1-#8 GREEN WIRES SHALL BE OMITTED FOR INSTALLATIONS WHERE IR DROP STATION IS NOT REQUIRED.
4. GREEN (MIDDLE) WIRES SHALL BE USED FOR BURIED VALVE INSTALLATIONS, SEE STD. DWG. 905.
5. TEST STATION SHALL BE LOCATED IN SIDEWALK IF AVAILABLE AND SHALL NOT BE PLACED IN TRAVELLED WAY.

REVISION	DATE	BY	DESCRIPTION
1	11/04	P&J	GENERAL
2	05/06	P&J	GENERAL
3	02/08	P&J	GENERAL

APPROVED SBMulligan 4/23/08
MANAGER OF ENGINEERING DATE

CALLEGUAS MUNICIPAL WATER DISTRICT
THOUSAND OAKS CALIFORNIA

STANDARD DRAWINGS
CATHODIC TEST STATION TERMINAL BOX WITHOUT ANODE GROUP

DWG NO
903B

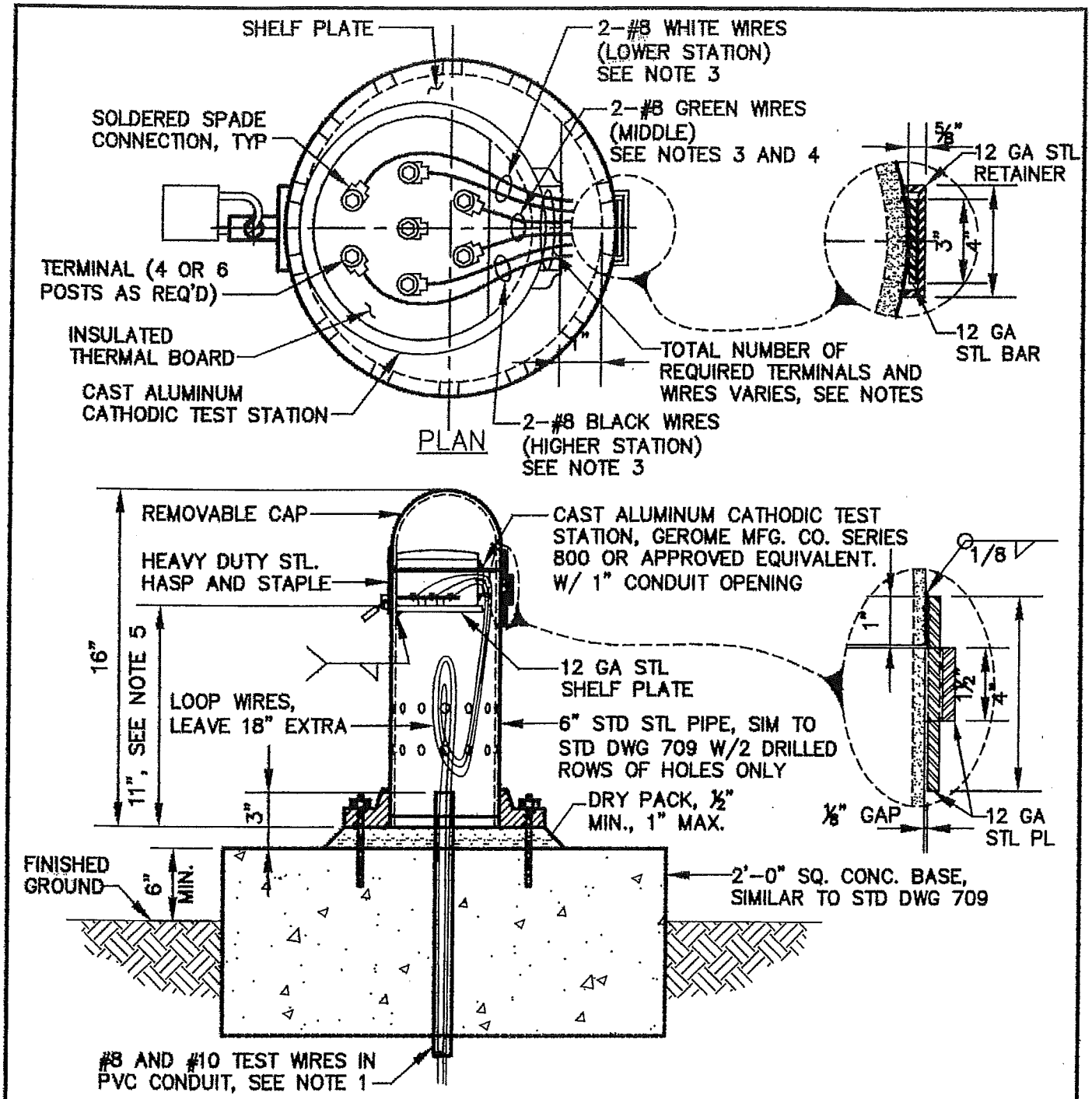

NOTES:

1. ALL CONDUITS SHALL BE SCHED. 80 PVC ELECTRICAL CONDUIT SIZED BY CONTRACTOR OR AS DIRECTED BY OWNER. CONDUIT SHALL BE TERMINATED WITHIN 2' OF WIRE TO PIPE ATTACHMENT. USE 18" MIN. SWEEPS. INSTALL CHAFING BUSHING AT CONDUIT ENDS TO PREVENT WIRE INSULATION DAMAGE.
2. THIS DETAIL IS USED ONLY WHEN PIPE VENT WILL BE PRESENT FOR OTHER DESIGN CONSIDERATION.
3. 1-#8 WHITE, 1-#8 BLACK AND 1-#8 GREEN WIRES SHALL BE OMITTED FOR INSTALLATIONS WHERE IR DROP STATION IS NOT REQUIRED.
4. GREEN (MIDDLE) WIRES SHALL BE USED FOR BURIED VALVE INSTALLATIONS, SEE STD. DWG. 905.
5. FOR INSTALLATION WITH ANODE BED, OMIT ALUMINUM TERMINAL HOLDER AND INSTALL TEST BOARD SIMILAR TO STD. 903B. RELOCATE SHELF DOWN 4" TO ACCOMODATE TERMINAL BOARD.

REVISION	DATE	BY	DESCRIPTION
1	11/04	PM	GENERAL

APPROVED SBHulligan 11/24/04
MANAGER OF ENGINEERING DATE

CALLEGUAS MUNICIPAL WATER DISTRICT
THOUSAND OAKS CALIFORNIA

STANDARD DRAWINGS
CATHODIC TEST STATION IN PIPE VENT

DWG NO
903C

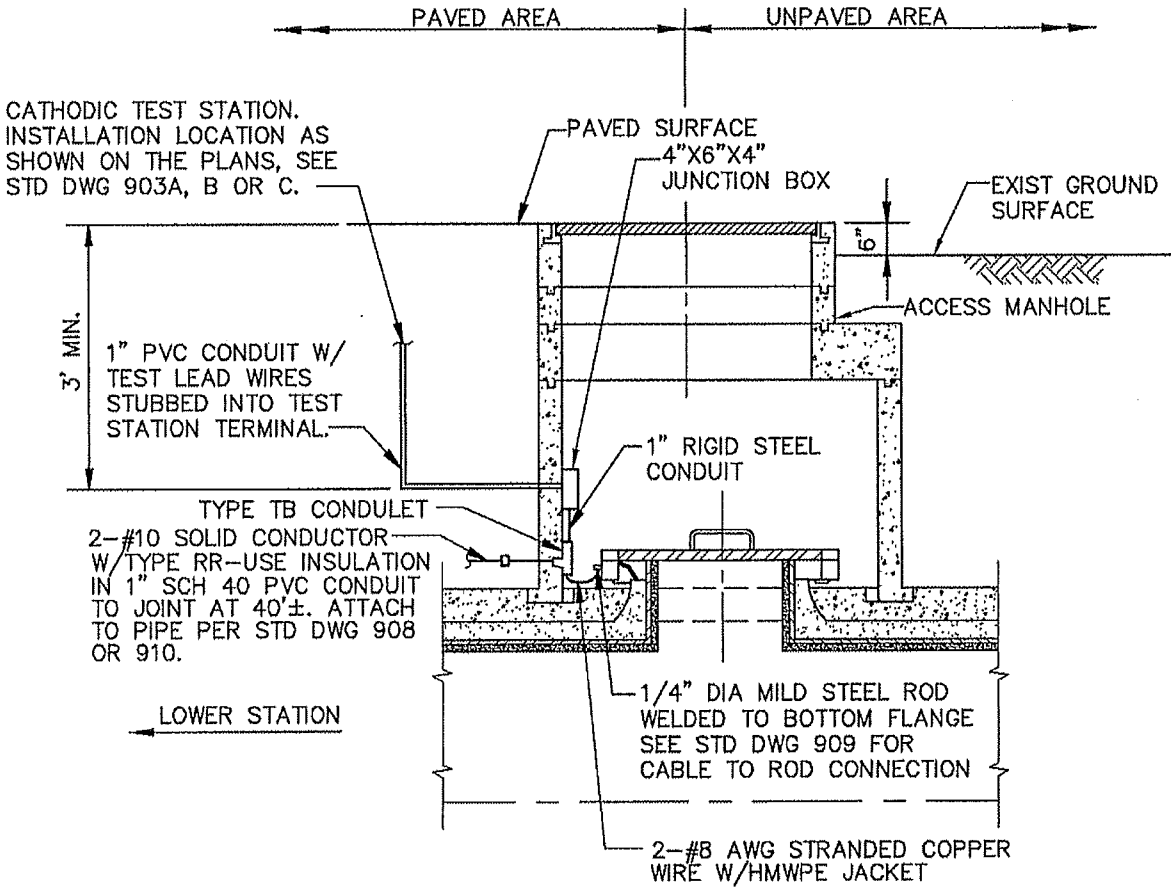

TEST CABLE PLACEMENT AT MANHOLE

(CEMENT MORTAR OR DIELECTRICALLY COATED PIPE)

REVISION	DATE	BY	DESCRIPTION
6	01/08	P&I	GENERAL
7	03/08	P&I	GENERAL
8	04/08	P&I	GENERAL

APPROVED SBMulligan 4/23/08
MANAGER OF ENGINEERING DATE

CALLEGUAS MUNICIPAL WATER DISTRICT
THOUSAND OAKS CALIFORNIA

STANDARD DRAWINGS
CATHODIC TEST STATION AT MANHOLE

DWG NO
904

CATHODIC TEST STATION
INTALLATION LOCATION
AS SHOWN ON THE PLANS
SEE STD DWG NO. 903A, B, OR C

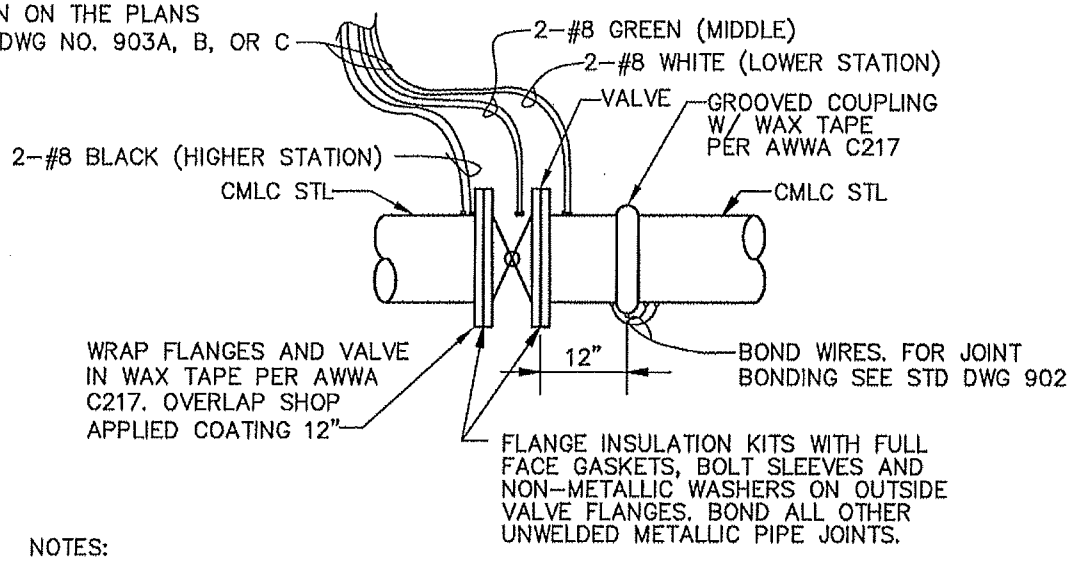

NOTES:

1. TEST STATION SHALL NOT BE INSTALLED AT VALVES FOR AIR/VAC AND BLOW-OFF ASSEMBLIES.
2. ALL WIRES SHALL BE THWN.
3. CONDUIT SHALL BE TERMINATED WITHIN 2' OF WIRE-TO-PIPE ATTACHMENT. USE 18" MIN. SWEEPS. ENDS OF CONDUIT SHOULD BE EQUIPPED WITH CHAFING BUSHINGS TO PREVENT WIRE INSULATION DAMAGE.
4. LEAVE 18 INCHES OF WIRE SLACK NEAR PIPE LEAD ATTACHMENT.

REVISION	DATE	BY	DESCRIPTION
4	11/06	P&J	GENERAL
5	02/08	P&J	GENERAL
6	04/08	P&J	GENERAL

APPROVED SB Mulligan 4/23/08
MANAGER OF ENGINEERING DATE

CALLEGUAS MUNICIPAL WATER DISTRICT
THOUSAND OAKS CALIFORNIA

STANDARD DRAWINGS
CATHODIC TEST STATION BURIED VALVE

DWG NO
905

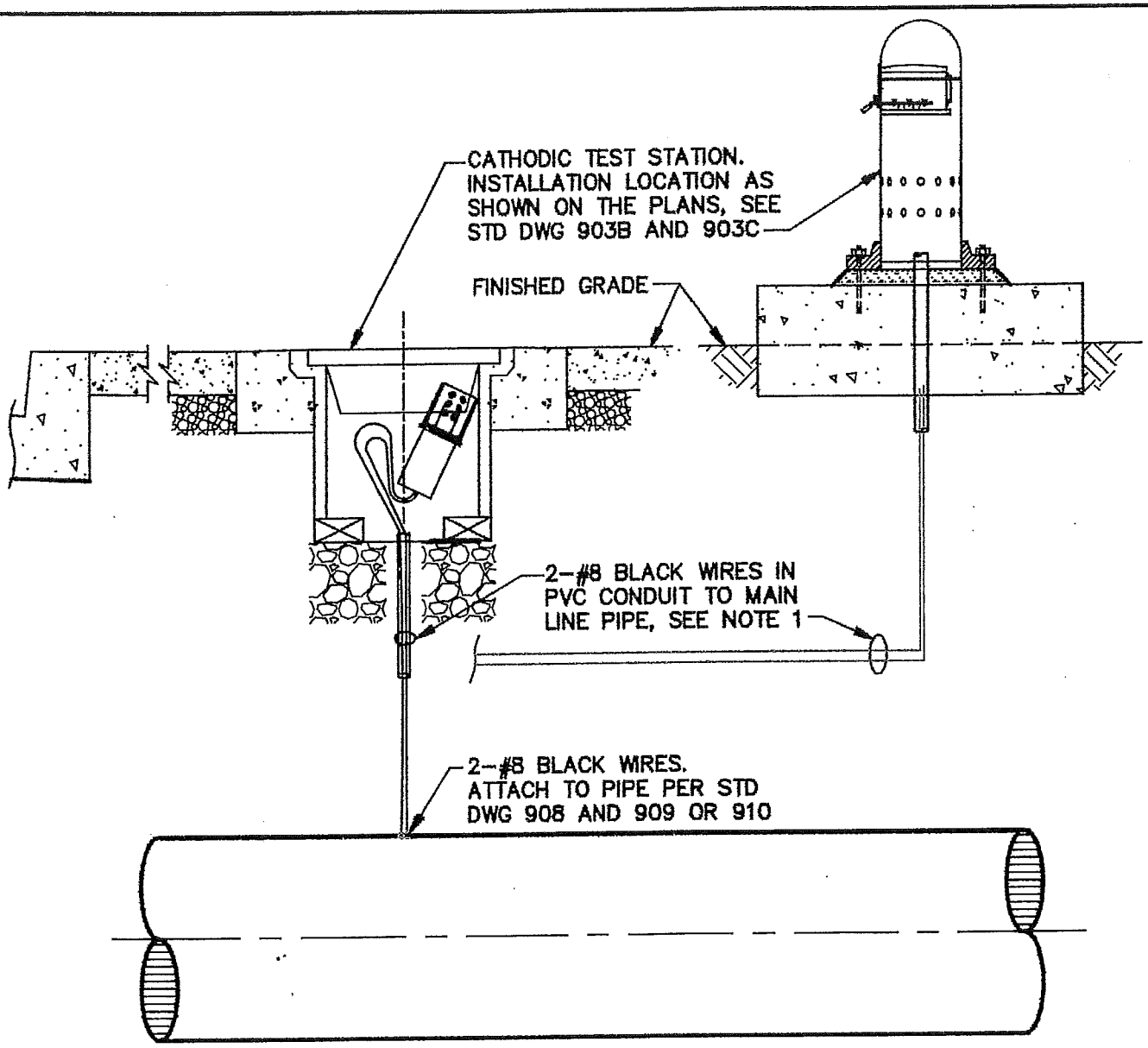

PROFILE

NOTES:

1. ALL CONDUITS SHALL BE SCHED. 80 PVC ELECTRICAL CONDUIT SIZED BY CONTRACTOR OR AS DIRECTED BY OWNER. CONDUIT SHALL BE TERMINATED WITHIN 2' OF WIRE TO PIPE ATTACHMENT. USE 18" MIN. SWEEPS. INSTALL CHAFING BUSHING AT CONDUIT ENDS TO PREVENT WIRE INSULATION DAMAGE.
2. IF ANODE BED IS REQUIRED, INSTALL CATHODIC TEST STATION PER STD. DWGS. 903A AND 903C.
3. FOR INSTALLATION AT MANHOLES, SEE STANDARD DRAWING 904.

REVISION	DATE	BY	DESCRIPTION
1	07/98	CDM	GENERAL
2	03/02	PJM	GENERAL
3	11/04	PJM	GENERAL

APPROVED SBMulligan 11/24/04
MANAGER OF ENGINEERING DATE

CALLEGUAS MUNICIPAL WATER DISTRICT
THOUSAND OAKS CALIFORNIA

STANDARD DRAWINGS
CATHODIC TEST STATION ON MAIN LINE PIPE

DWG NO
907B

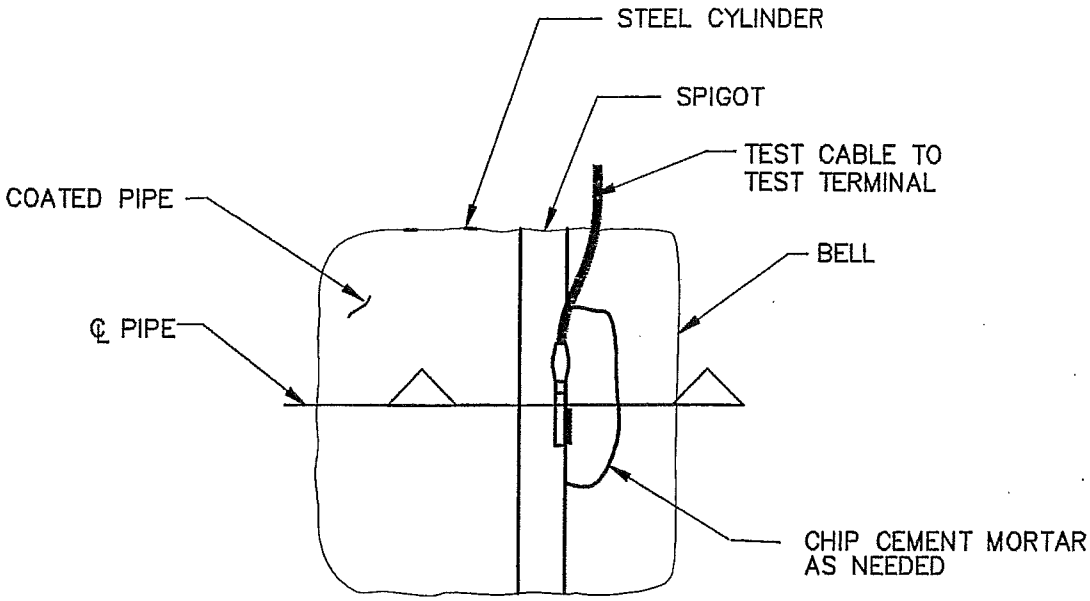

PLAN

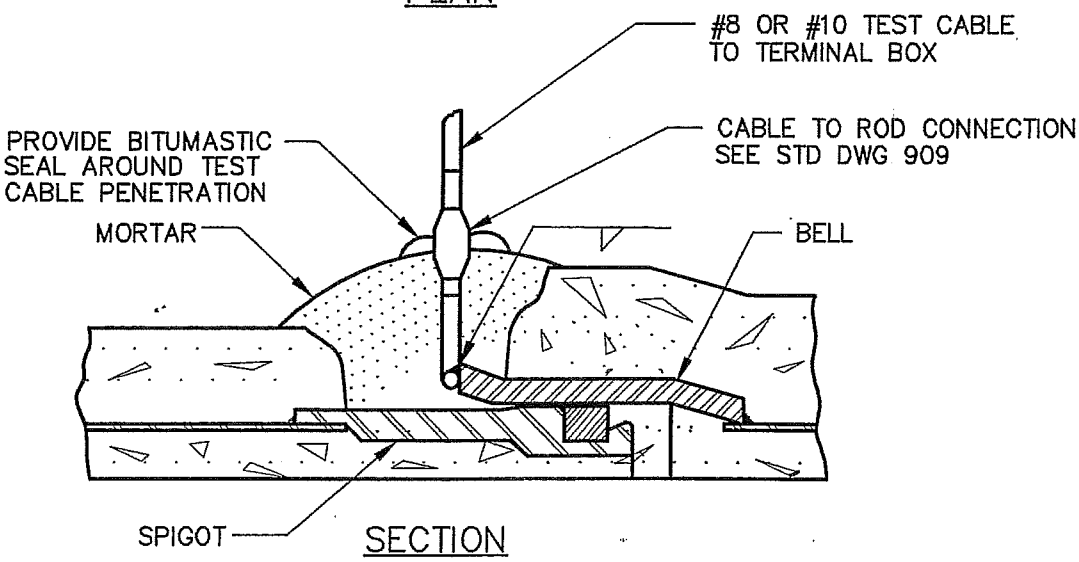

SECTION

NOTE:

1. SEE STD DWG 902, "TYPICAL JOINT BONDING"

ROD TO PIPE CONNECTION

REVISION	DATE	BY	DESCRIPTION
1	7/99	CDM	GENERAL
2	3/02	P&d	GENERAL

APPROVED Susan B. Mulligan 4/25/02
MANAGER OF ENGINEERING DATE

CALLEGUAS MUNICIPAL WATER DISTRICT
THOUSAND OAKS CALIFORNIA

STANDARD DRAWINGS
ROD TO PIPE CONNECTION

DWG NO
908

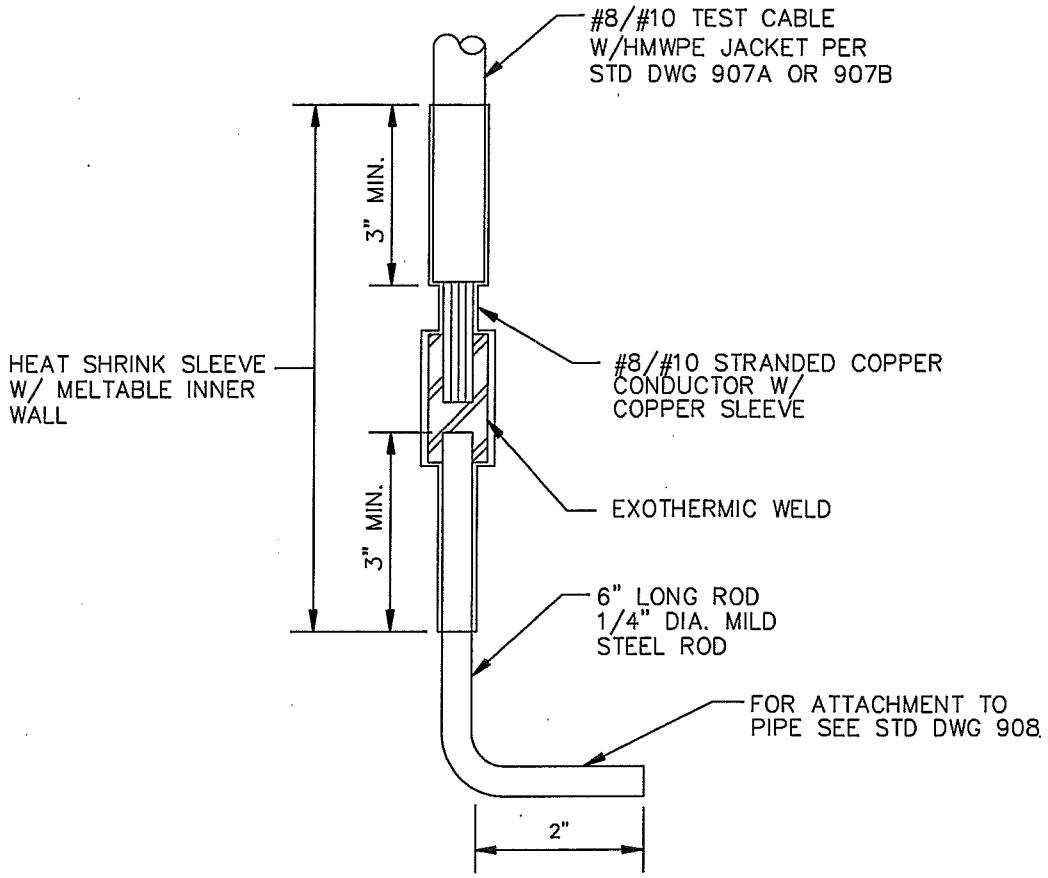

CABLE TO ROD CONNECTION

REVISION	DATE	BY	DESCRIPTION
1	08/06	P&d	GENERAL

APPROVED Susan Mulligan Digitally signed by Susan Mulligan DN: cn=Susan Mulligan, c=US Date: 2006.11.07 08:49:02 -08'00'

MANAGER OF ENGINEERING DATE

CALLEGUAS MUNICIPAL WATER DISTRICT

THOUSAND OAKS CALIFORNIA

STANDARD DRAWINGS

CABLE TO ROD CONNECTION

DWG NO 909

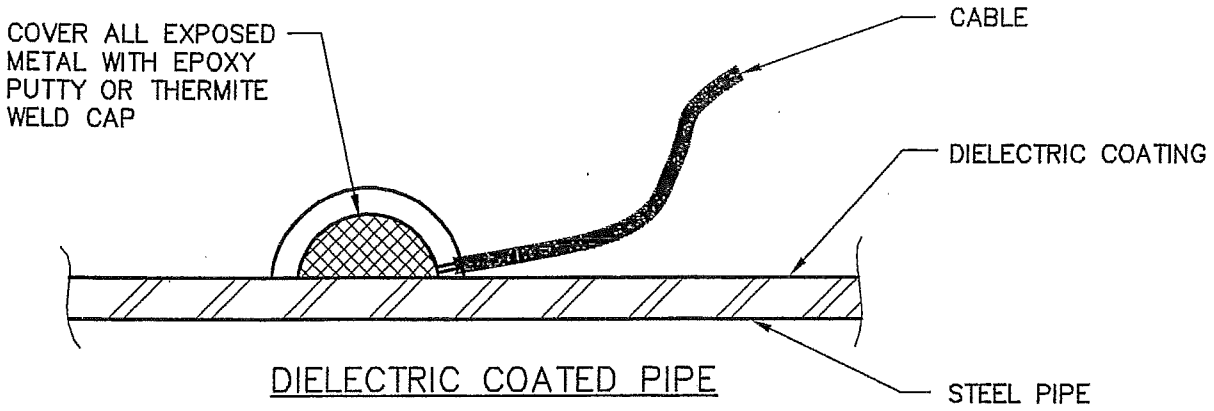

DIELECTRIC COATED PIPE

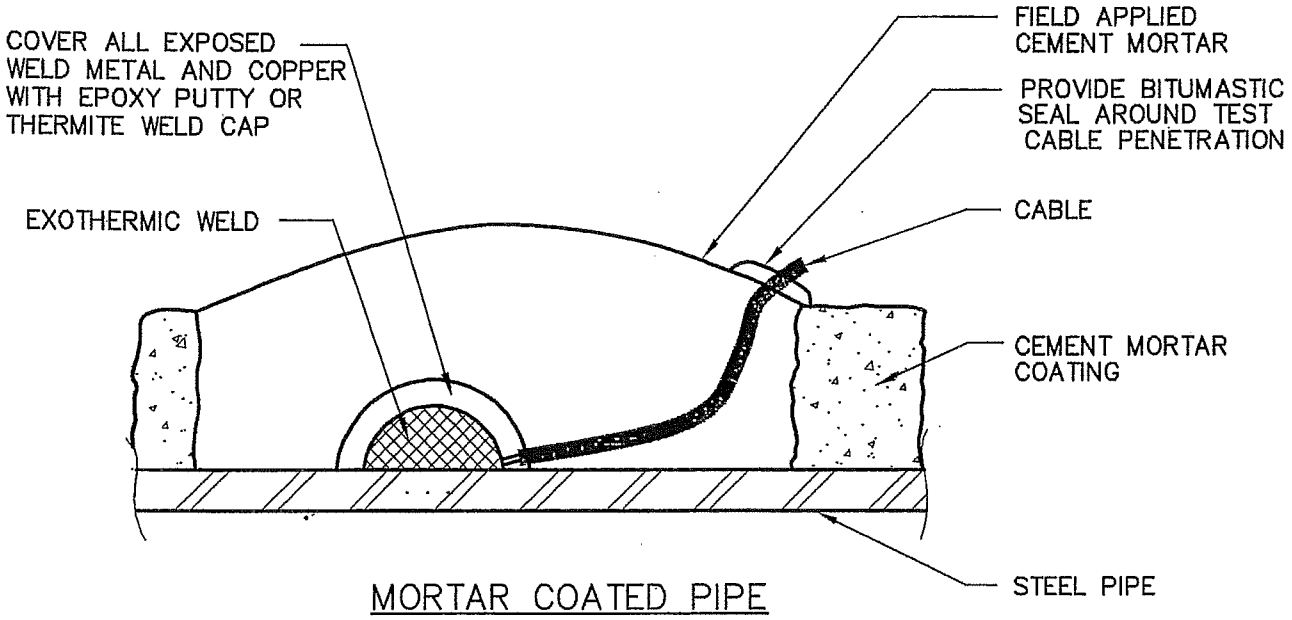

MORTAR COATED PIPE

CABLE TO PIPE CONNECTION

NOTES:

STEP 1–FILE OR GRIND CONNECTION AREA (2"X2") TO BARE SHINY METAL AND CLEAN.
STEP 2–STRIP INSULATION FROM TEST LEAD AND ATTACH COPPER SLEEVE.
STEP 3–PERFORM EXOTHERMIC WELD.
STEP 4–STRIKE SIDE OF WELD SHARPLY WITH 16 OZ OR LARGER HAMMER. IF WELD COMES OFF, REPEAT STEPS 1, 3 AND 4.
STEP 5–REMOVE SLAG FROM CONNECTION AND PEEN WELD FOR SOUNDNESS.
STEP 6–COVER CONNECTION WITH EPOXY PUTTY COMPOUND OR THERMITE WELD CAP, AND COAT ALL EXPOSED METAL WITH BITUMASTIC.

REVISION	DATE	BY	DESCRIPTION
1	7/99	CDM	GENERAL
2	3/02	P&J	GENERAL

APPROVED Susan B. Mulligan 4/25/02
MANAGER OF ENGINEERING DATE

CALLEGUAS MUNICIPAL WATER DISTRICT
THOUSAND OAKS CALIFORNIA

STANDARD DRAWINGS
CABLE TO PIPE CONNECTION

DWG NO
910

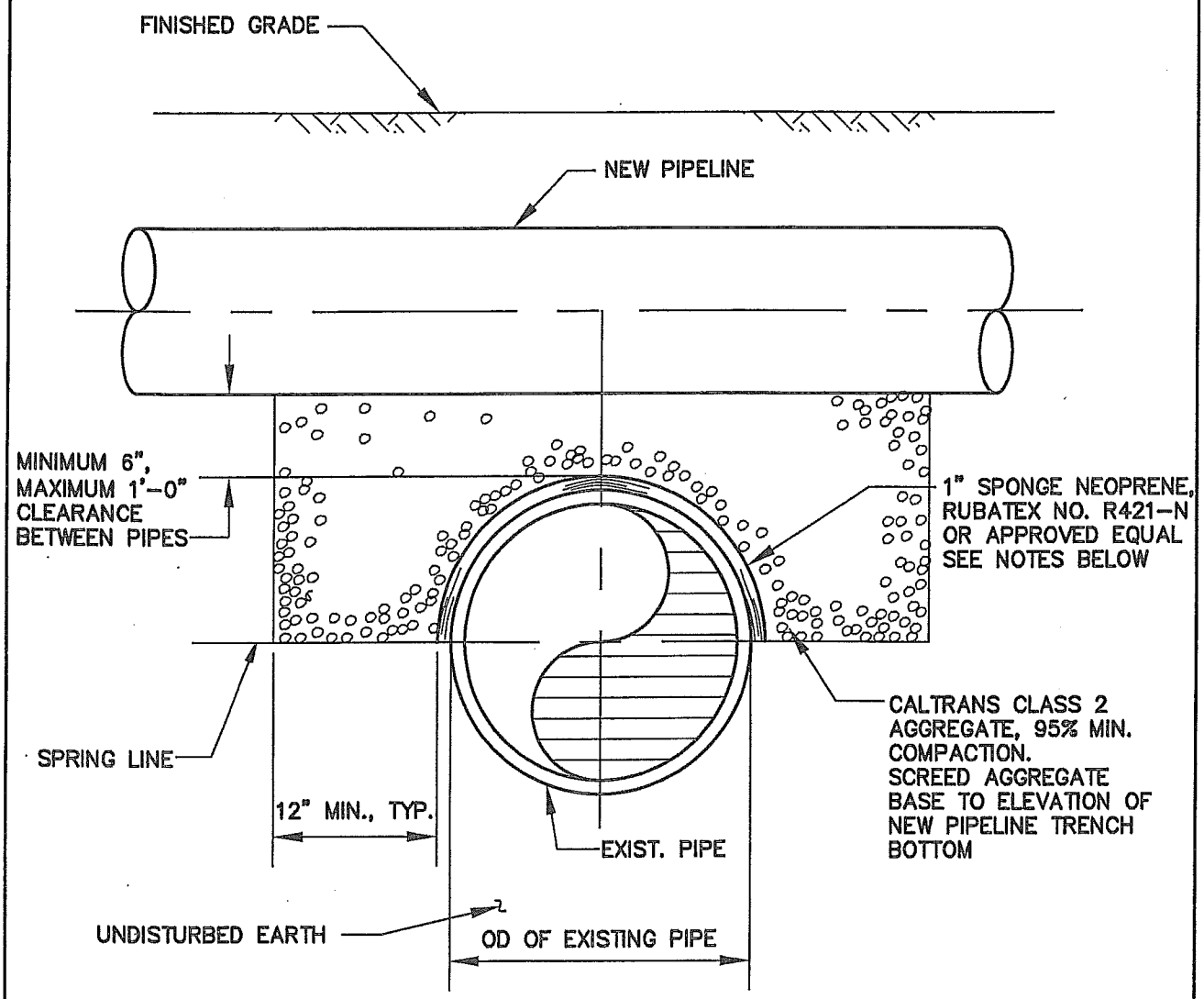

TYPICAL SECTION

NTS

NOTES:

1. THE DETAIL IS FOR STRUCTURAL PROTECTION OF EXISTING PIPELINE ONLY. REFER TO STATE AND LOCAL REGULATIONS FOR ADDITIONAL SANITARY SEPARATION AND PROTECTION REQUIREMENTS.

2. EQUIVALENT SPONGE PRODUCT FROM FOLLOWING MANUFACTURERS ARE ACCEPTABLE: S & S PLASTICS, INC. AMERICAN NATIONAL RUBBER (MODEL 4311N)

REVISION	DATE	BY	DESCRIPTION
2	03/02	P&J	GENERAL
3	11/04	P&J	GENERAL
4	03/06	P&J	GENERAL

S. Mulligan 3/14/06 Digitally signed by S. Mulligan 3/14/06 DN: CN = S. Mulligan 3/14/06, C = US, O = Calleguas MWD, OU = Engineering Date: 2006.03.14 08:44:29 -08'00'

APPROVED MANAGER OF ENGINEERING DATE

CALLEGUAS MUNICIPAL WATER DISTRICT

THOUSAND OAKS CALIFORNIA

STANDARD DRAWINGS

UTILITY CROSSING OVER EXISTING PIPELINE 6" TO 1' COVER

DWG NO 1101

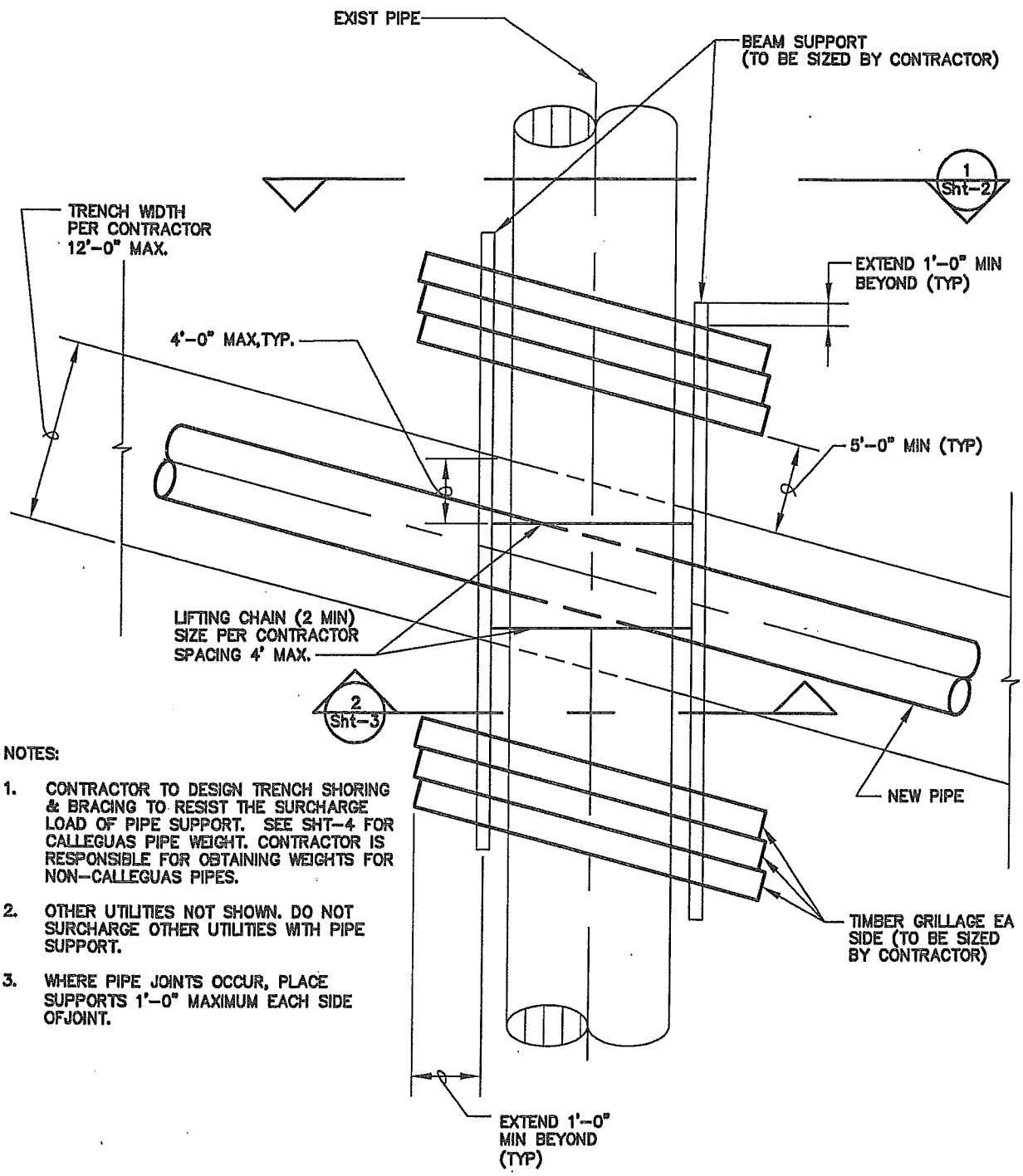

NOTES:

1. CONTRACTOR TO DESIGN TRENCH SHORING & BRACING TO RESIST THE SURCHARGE LOAD OF PIPE SUPPORT. SEE SHT-4 FOR CALLEGUAS PIPE WEIGHT. CONTRACTOR IS RESPONSIBLE FOR OBTAINING WEIGHTS FOR NON-CALLEGUAS PIPES.
2. OTHER UTILITIES NOT SHOWN. DO NOT SURCHARGE OTHER UTILITIES WITH PIPE SUPPORT.
3. WHERE PIPE JOINTS OCCUR, PLACE SUPPORTS 1'-0" MAXIMUM EACH SIDE OFJOINT.

PIPE SUPPORT PLAN

N.T.S.

REVISION	DATE	BY	DESCRIPTION
2	03/02	P&d	GENERAL
3	11/04	P&d	GENERAL
4	03/06	P&d	GENERAL

APPROVED S. Mulligan 3/14/06 Digitally signed by S. Mulligan 3/14/06 DN: CN = S. Mulligan 3/14/06, C = US, O = Calleguas MWD, OU = Engineering Date: 2006.03.14 08:44:55 -08'00'

MANAGER OF ENGINEERING DATE

CALLEGUAS MUNICIPAL WATER DISTRICT

THOUSAND OAKS CALIFORNIA

STANDARD DRAWINGS

UTILITY CROSSING UNDER EXISTING PIPELINE (>4' TRENCH WIDTH) PIPE SUPPORT PLAN

DWG NO 1102

SHEET 1 OF 4

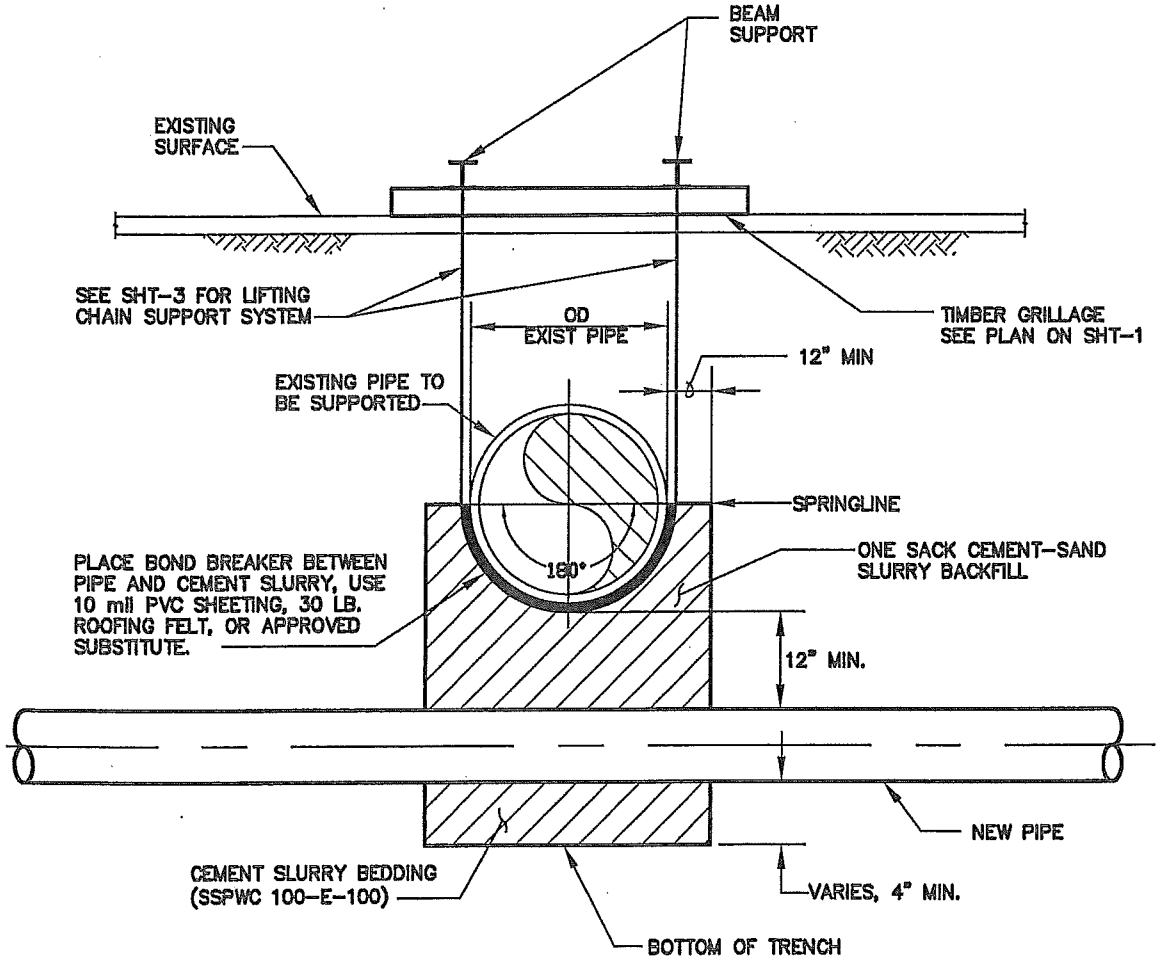

PIPE SUPPORT

SECTION 1 / SHT-1

N.T.S.

REVISION	DATE	BY	DESCRIPTION
2	03/02	P&d	GENERAL
3	11/04	P&d	GENERAL
4	03/06	P&d	GENERAL

S. Mulligan 3/14/06 Digitally signed by S. Mulligan 3/14/06 DN: CN = S. Mulligan 3/14/06, C = US, O = Calleguas MWD, OU = Engineering Date: 2006.03.14 08:45:24 -08'00'

APPROVED _____ MANAGER OF ENGINEERING DATE

CALLEGUAS MUNICIPAL WATER DISTRICT

THOUSAND OAKS CALIFORNIA

STANDARD DRAWINGS

UTILITY CROSSING UNDER EXISTING PIPELINE (>4' TRENCH WIDTH) PIPE SUPPORT SECTION – 1

DWG NO 1102

SHEET 2 OF 4

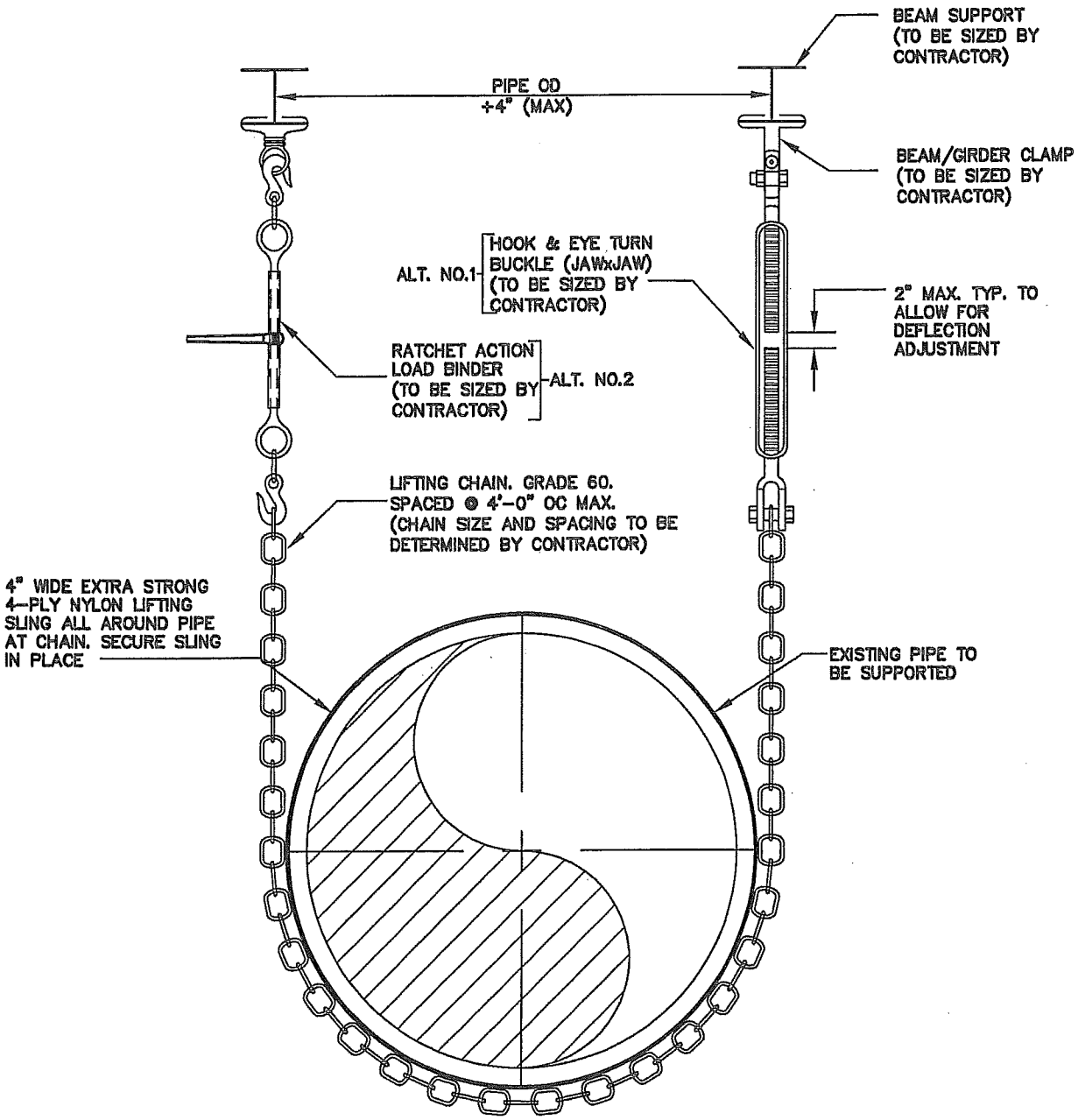

PIPE SUPPORT

SECTION 2 Sht-1

N.T.S.

REVISION	DATE	BY	DESCRIPTION
2	03/02	PBd	GENERAL
3	11/04	PBd	GENERAL
4	03/06	PBd	GENERAL

S. Mulligan 3/14/06 Digitally signed by S. Mulligan 3/14/06 DN: CN = S. Mulligan 3/14/06, C = US, O = Calleguas MWD, OU = Engineering Date: 2006.03.14 08:45:50 -08'00'

APPROVED

MANAGER OF ENGINEERING DATE

CALLEGUAS MUNICIPAL WATER DISTRICT

THOUSAND OAKS CALIFORNIA

STANDARD DRAWINGS

UTILITY CROSSING UNDER EXISTING PIPELINE (>4' TRENCH WIDTH) PIPE SUPPORT SECTION – 2

DWG NO 1102

SHEET 3 OF 4

CONSTRUCTION NOTES:

1. CALLEGUAS MUST BE PRESENT DURING ALL EXCAVATIONS FOR OR IN THE PROXIMITY OF ITS FACILITIES. CONTRACTOR SHALL PROVIDE AT LEAST 48-HOURS WEEKDAY NOTIFICATION TO THE DISTRICT'S PROJECT MANAGER PRIOR TO EXCAVATION.
2. CONTRACTOR SHALL BE COMPLETELY RESPONSIBLE FOR PROVIDING STRUCTURAL DESIGN AND CALCULATIONS FOR PIPE SUPPORT, TRENCH SHORING AND BRACING FOR THE NEW PIPE TRENCH FOR THE MINIMUM SURCHARGE LOAD OF GRILLAGE. DESIGN AND ALL CALCULATIONS SHALL BE STAMPED AND SIGNED BY A REGISTERED ENGINEER AND SUBMITTED TO CMWD FOR GENERAL REVIEW AT LEAST THREE WEEKS BEFORE EXCAVATION. THIS DETAIL IS PROVIDED TO INDICATE GENERAL SUPPORT SYSTEM REQUIREMENTS. CONTRACTOR TAKES FULL RESPONSIBILITY FOR ALL DAMAGE IN THE EVENT OF ANY FAILURE WHATSOEVER.
3. SOLDIER BEAMS AND INTERNAL BRACING SHALL BE INSTALLED IN THE TRENCH TO RESIST ALL SURCHARGE LOADS.
4. EXCAVATE AND EXPOSE EXISTING PIPE, MAINTAINING SUPPORT UNDER THE PIPE.
5. HAND EXCAVATE UNDER EXISTING PIPE FOR INSTALLATION OF BOND BREAKER, BLOCKING AND LIFTING CHAIN SUPPORTS. LIFTING CHAINS SHALL BE A MINIMUM OF GRADE 60, TRADE SIZE, AND SPACED NOT MORE THAN 4'-0" O.C. A MINIMUM OF 2 CHAINS ARE TO BE USED. LIFTING CHAIN SUPPORT SHALL BE LINED & INSTALLED PERPENDICULAR TO THE EXISTING PIPE.
6. INSTALL BEAMS AND PIPE SUPPORTING APPARATUS AS INDICATED ON SHT. 3. SUPPORT BEAMS ALONG EXISTING PIPE SHALL BE INSTALLED EQUIDISTANT FROM CENTERLINE OF EXISTING PIPE.
7. SUPPORT SYSTEM SHALL BE USED FOR SUPPORTING THE EXISTING PIPE ONLY.
8. ADJUST TURNBUCKLES OR LOAD BINDER, AS APPLICABLE, TO MAINTAIN EQUAL SUPPORT ALONG THE EXISTING PIPE. MONITOR BY SURVEY OR STRING LINE AND ADJUST SUPPORT SYSTEM TO PREVENT EXISTING PIPE FROM SAGGING OR DEFLECTING.
9. AFTER SUPPORT SYSTEM IS INSTALLED AND THE EXISTING PIPE IS SECURELY SUPPORTED, COMPLETE EXCAVATION UNDER THE EXISTING PIPE.
10. AFTER INSTALLING NEW PIPE, BACKFILL PER STD DWG 1103.
11. REMOVE SUPPORT APPARATUS 24 HOURS AFTER CEMENT SLURRY BACKFILL HAS BEEN PLACED. CUT CHAIN AT TOP OF CEMENT SLURRY BEDDING.

WELDED STEEL & BAR WRAPPED STEEL CYLINDER PIPE	
NOMINAL PIPE DIAMETER (in)	PIPE WEIGHT (lb/ft)
24	425
27	500
30	600
33	700
36	825
39	950
42	1075
45	1200
48	1425
51	1575
54	1725
57	1875
60	2075
64	2300
66	2475
70	2700
72	2850
78	3275

PRESTRESSED CONCRETE CYLINDER PIPE	
NOMINAL PIPE DIAMETER (in)	PIPE WEIGHT (lb/ft)
48	1650
51	1975
54	2175
57	2425
60	2650
64	2975
66	3125
70	3450
72	3600
78	4200

PIPE WEIGHT TABLE NOTES:

1. FOR PIPE SIZES NOT SHOWN, USE INTERPOLATED VALUES OF PIPE WEIGHT.
2. PIPE WEGHTS ARE FOR CMWD PIPE ONLY.
3. FOR PIPES NOT OWNED BY CALLEGUAS OR FOR OTHER PIPE MATERIALS, OBTAIN WEIGHT INFORMATION FROM OWNER OF PIPE.

REVISION	DATE	BY	DESCRIPTION
2	03/02	P&d	GENERAL
3	11/04	P&d	GENERAL
4	03/06	P&d	GENERAL

S. Mulligan 3/14/06 Digitally signed by S. Mulligan 3/14/06 DN: CN = S. Mulligan 3/14/06, C = US, O = Calleguas MWD, OU = Engineering Date: 2006.03.14 08:46:34 -08'00'

APPROVED MANAGER OF ENGINEERING DATE

CALLEGUAS MUNICIPAL WATER DISTRICT

THOUSAND OAKS CALIFORNIA

STANDARD DRAWINGS

UTILITY CROSSING UNDER EXISTING PIPELINE (>4' TRENCH WIDTH) PIPE SUPPORT NOTES

DWG NO 1102

SHEET 4 OF 4

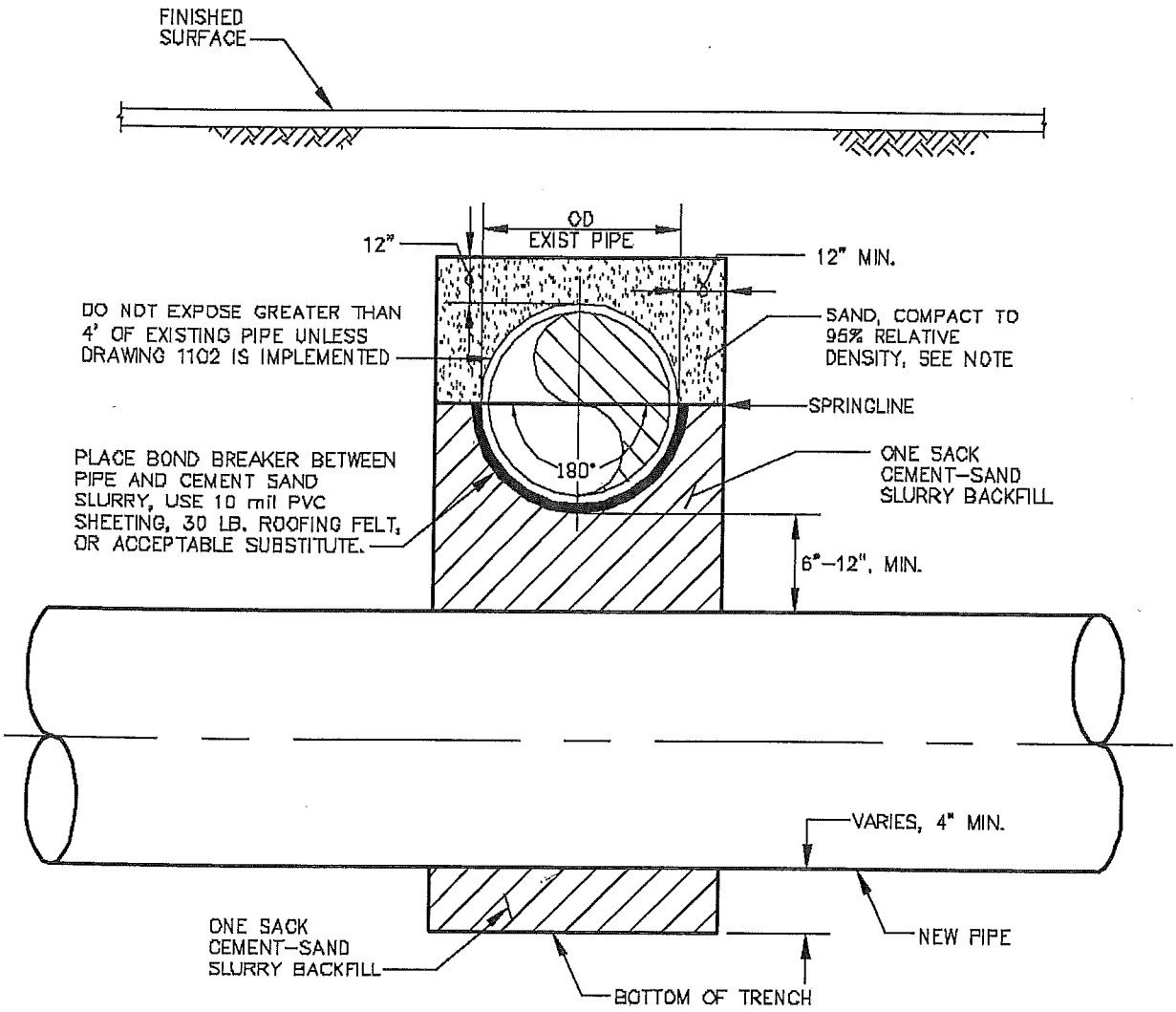

PIPE SUPPORT

NOTE:

SAND BACKFILL SHALL CONFORM TO SSPWC 200-1.5 WITH <0.5% WATER, 90-100% PASSING NO.4 SIEVE AND 0-5% PASSING NO.200 SIEVE, UNLESS OTHERWISE SPECIFIED.

REVISION	DATE	BY	DESCRIPTION
4	11/04	P&I	GENERAL
5	03/06	P&I	GENERAL
6	08/07	P&I	ADD SAND BACKFILL

APPROVED Susan Mulligan Digitally signed by Susan Mulligan DN: cn=Susan Mulligan, c=US Date: 2007.12.28 09:08:08 -08'00'

MANAGER OF ENGINEERING DATE

CALLEGUAS MUNICIPAL WATER DISTRICT

THOUSAND OAKS CALIFORNIA

STANDARD DRAWINGS

BACKFILL FOR CROSSING BENEATH EXISTING UTILITIES

DWG NO 1103

APPENDIX B

FORMS

Pre-Bid Request Form for Information or Clarification (RFI/RFC Form)

Owner: Calleguas Municipal Water District

Project Name: Salinity Management Pipeline, Phase 2A Spec. No: 470

Engineer: _____ Fax No.: _____

(for Engineer name and contact information, see Instruction to Bidders)

Bidder's Name: _____ Date: _____

Submitted by: _____ _____

(Print Name) (*Signature)*

Fax No.: _____ Telephone No.: _____

Number of Pages Including this Sheet: _____

Specification Section No.: _____ Specifications Page No.: _____

Drawing/Sheet No.: _____ Detail: _____

Description: (describe in detail the requested information and/or clarification)

_____

_____

_____

_____

_____

_____

_____

_____

_____

Notes:

1. All fields must be filled in.
2. Submit this form by the date and time set forth in the Instructions to Bidders.
3. If a response is made which modifies the Contract Documents, it will be made in writing for the benefit of all prospective bidders and without identification as to the source of inquiry.
4. Responses to matters not affecting the Contract Documents may be provided by phone.
5. Use a separate form for each item. Attach additional pages as necessary for each item.

CONTRACTOR'S CERTIFICATE OF COMPLETION

TO: _____ (Calleguas Project Manager)
Calleguas Municipal Water District
2100 Olsen Road
Thousand Oaks, CA 91360

PROJECT _____

SPEC NO. _____

OWNER Calleguas Municipal Water District

FROM: _____
(Firm or Corporation)

This is to certify that I, _____, am an authorized Official of

_____ (firm)

working in the capacity of _____ (title)
and have been properly authorized by said firm or corporation to sign the following statements pertaining to the subject contract.

I know of my own personal knowledge, and do hereby certify, that the Work of the subject Contract has been performed, and materials used and installed in every particular, in accordance with, and conformity to, the Contract Documents, including the Drawings and Specifications.

The Contract Work is now complete in all parts and requirements, and ready for your final inspection.

I understand that neither the determination by the Engineer that the work is complete, nor the acceptance thereof by the Owner, shall operate as a bar to claim against the Contractor under the terms of the warranty provisions of the Contract Documents.

By _____ Date _____
(Name)

Title _____

For _____
(Name of firm or corporation)

Rev. Nov. 2005

DAILY WORK REPORT
FOR EXTRA OR DISPUTED WORK

Distribution: Original-Project File
Yellow-Contractor

SPEC. NO.	WCD No.	Previous Report	$
PROJECT NAME	Report No.	This Report	$
PRIME CONTRACTOR	Date Work Performed	Total to Date	$
SUBCONTRACTORS	Date Report Completed		
DESCRIPTION OF WORK		Total Authorized	$

EQUIPMENT	HRS	RATE	PRIME		SUB		LABOR	CLASSIFICATION	HRS	RATE	PRIME		SUB	
1. Furnish invoices for rentals.	Subtotal						1. Furnish certified payrolls.		Subtotal					
	15% Markup								20% Markup					
	Total								Total					

MATERIAL	QTY	UNIT	PRIME		SUB		TOTALS	PRIME		SUB	
							Total Equipment, Material & Labor				
							Prime markup on Sub (10% first $5000)				
							Applied only once on each Change Order				
							Prime markup on Sub (5% over $5000)				
							Subtotal				
							Total (Prime + Sub)				
							TOTAL THIS REPORT				

1. Furnish invoices.	Subtotal						I certify that the charges are accurately reported for the work indicated.	Calleguas Municipal Water District*
	15% Markup							
	Total							Resident Inspector Date
Form Revised 3/11/02							Contractor's Representative Date	Project Manager Date

*If the District and the Contractor are unable to reach agreement on disputed work, the District may direct the Contractor to proceed with the work. In this case, the District's signature may not be construed as an acknowledgment of extra work, but shall merely acknowledge receipt of the Contractor's potential claim.

STATEMENT OF EXCEPTIONS
PUNCH LIST

PROJECT _____ SPEC. NO. _____

INSPECTION WAS CONDUCTED AT ABOVE PROJECT BY: _____ DATE: _____

OWNER	
OWNER:	CALLEGUAS M.W.D.
ADDRESS:	2100 OLSEN RD.
	THOUSAND OAKS, CA 91360

CONTRACTOR
NAME:
ADDRESS:
PHONE:

THE FOLLOWING ITEMS ARE TO BE CORRECTED OR COMPLETED TO COMPLY WITH THE CONTRACT DOCUMENTS

TYPE OF INSPECTION	PROJECT COMPLETION ☐	GUARANTEE PERIOD

DATE COMPLETE	NO.	ITEM DESCRIPTION

DISTRIBUTION: ORIGINAL - PROJECT FILE
YELLOW - RESIDENT INSPECTOR
PINK - CONTRACTOR

RELEASE ON CONTRACT

Conditional Waiver and Release upon Final Payment

[California Public Contract Code § 3262(d)3]

Upon receipt by the undersigned of a check from

_____

in the sum of $_____ payable to

_____,

and when the check has been properly endorsed and has been paid by the bank upon which it is drawn, this document shall become effective to release any mechanic's lien, stop notice, or bond right the undersigned has on the job of **Calleguas Municipal Water District** located at

_____
(Job Description)

This release covers the final payment to the undersigned for all labor, services, equipment, or material furnished on the job, except for disputed claims listed below.

(Describe claims and provide amount)

_____ $_____

_____ $_____

_____ $_____

_____ $_____

_____ $_____
(Attach additional pages if necessary)

Before any recipient of this document relies on it, the party should verify evidence of payment to the undersigned.

Dated _____ By _____
(Name)

Its _____
(Title)

For _____
(Company Name)

Rev. Feb. 2, 2006

CONTRACT CLARIFICATION/INTERPRETATION REQUEST (RFI)

Project: _____ Request No. _____

Contractor: _____ Date: ___/___/____

Project No. _____

Clarification/Interpretation requested by: _____

Regarding: Plan Sheet ____ of ____ Specifications Section: _____

Description:

Prepared by: _____

Date: ___/___/___

Response by: _____

Response:

Signed: _____

Date: ___/___/___

Submit Signed Escrow Agreement to: Calleguas Municipal Water District, Attn: Engineering Division, 2100 Olsen Rd., Thousand Oaks CA 91360

ESCROW AGREEMENT FOR
SECURITY DEPOSITS IN LIEU OF RETENTION

This Escrow Agreement is entered into and made effective as of the latest date of the signatures on this Agreement by and between Calleguas Municipal Water District ("Calleguas") whose address is 2100 Olsen Road, Thousand Oaks, California, 91360-6800 and ("Contractor") whose address is _____
_____ and
("Escrow Agent") whose address is_____
_____.

For consideration hereinafter set forth, Calleguas, Contractor and Escrow Agent agree as follows:

(1) Pursuant to Section 22300 of the Public Contract Code of the State of California, Contractor has the option to deposit securities with Escrow Agent as a substitute for retention earnings required to be withheld by Calleguas pursuant to the Construction Contract entered into between Calleguas and Contractor for the work described as _____
_____ in the amount of _____
dated _____ (hereinafter referred to as the "Contract"), which Contract is identified by Spec. No. _____. Alternatively, on written request of Contractor, Calleguas shall make payments of the retention earnings directly to the Escrow Agent. When Contractor deposits the securities as a substitute for Contract earnings, the Escrow Agent shall notify Calleguas within ten days of the deposit. The market value of the securities at the time of the substitution shall be at least equal to the cash amount then required to be withheld as retention under the terms of the Contract between Calleguas and Contractor. Securities shall be held in the name of _____, and shall designate Contractor as the beneficial owner.

(2) Calleguas shall make progress payments to Contractor for those funds which otherwise would be withheld from progress payments pursuant to the Contract provisions, provided that the Escrow Agent holds securities in the form and amount specified above.

(3) When Calleguas makes payments of retentions earned directly to Escrow Agent, the Escrow Agent shall hold them for the benefit of Contractor until such time as the escrow created under this contract is terminated. Contractor may direct the investment of the payments into securities. All terms and conditions of this agreement and the rights and responsibilities of the parties shall be equally applicable and binding when Calleguas pays the Escrow Agent directly.

(4) Contractor shall be responsible for paying all fees for the expenses incurred by Escrow Agent in administering the escrow account and all expenses of Calleguas. These expenses and payment terms shall be determined by Calleguas, Contractor and Escrow Agent.

(5) The interest earned on the securities or the money market accounts held in escrow and all interest earned on that interest shall be for the sole account of Contractor and shall be subject to withdrawal by Contractor at any time and from time to time without notice to Calleguas.

(6) Contractor shall have the right to withdraw all or any part of the principal in the Escrow Account only by written notice to Escrow Agent accompanied by written authorization from Calleguas to the Escrow Agent that Calleguas consents to the withdrawal of the amount sought to be withdrawn by Contractor.

(7) Calleguas shall have a right to draw upon the securities in the event of default by Contractor. Upon seven days' written notice to the Escrow Agent from Calleguas of the default, the Escrow Agent shall immediately convert the securities to cash and shall distribute the cash as instructed by Calleguas.

(8) Upon receipt of written notification from the Calleguas certifying that the Contract is final and complete, and that Contractor has complied with all requirements and procedures applicable to the Contract, the Escrow Agent shall release to Contractor all securities and interest on deposit less escrow fees and changes of the Escrow Account. The escrow shall be closed immediately upon disbursement of all moneys and securities on deposit and payments of fees and charges.

(9) Escrow Agent shall rely on the written notifications from Calleguas and Contractor pursuant to Sections (5) to (8), inclusive, of this Agreement and Calleguas and Contractor shall hold Escrow Agent harmless from Escrow Agent's release and disbursement of the securities and interest as set forth above.

(10) The names of the persons who are authorized to give written notice or to receive written notice on behalf of Calleguas and on behalf of Contractor in connection with the foregoing, and exemplars of their respective signatures are as follows:

On behalf of Calleguas:	On behalf of Contractor:
General Manager Title	_____ Title
Susan B. Mulligan Name	_____ Name
_____ Signature	_____ Signature
Calleguas Municipal Water District 2100 Olsen Road Thousand Oaks, CA 91360-6800	_____ Street Address
	_____ City & State Zip Code

On behalf of Escrow Agent:

_____
Title

_____
Name

_____
Signature

_____
Street Address

_____
City & State Zip Code

At the time the Escrow Account is opened, Calleguas and Contractor shall deliver to the Escrow Agent a fully executed counterpart of this Agreement.

IN WITNESS WHEREOF, the parties have executed this Agreement by their proper officers on the latest date set forth below.

CALLEGUAS MUNICIPAL WATER DISTRCT

By_____ Date _____
Susan B. Mulligan
Its: General Manager

CONTRACTOR:

By_____ Date_____
_____
Its_____
(If Contractor is a corporation, the Escrow Agreement shall be signed above by one of the following: Chairman of the Board, President or any Vice President)

By_____ Date_____

_____

Its_____

(If Contractor is a corporation, the Escrow Agreement shall be signed above by one of the following: Secretary, any Assistant Secretary, Chief Financial Officer or any Assistant Treasurer)

ESCROW AGENT:

By_____ Date_____

_____

Its_____

Bank Charter: State ___

Federal ___

APPENDIX C

PERMITS

APPENDIX C – I.

VENTURA COUNTY
DEPARTMENTOF TRANSPORTATION

APPENDIX C – II.

STATE WATER RESOURCES CONTROL BOARD (SWRCB) NOTICE OF INTENT (NOI) AND ACKNOWLEDGEMENT OF RECEIPT

APPENDIX C – III.

VENTURA COUNTY
WATERSHED PROTECTION DISTRICT
ENCROACHMENT PERMIT

APPENDIX C – IV.

DEPARTMENT OF INDUSTRIAL RELATIONS
TUNNEL UNDERGROUND CLASSIFICATION

APPENDIX C – V.

GENERAL PERMIT FOR DISCHARGES OF LOW THREAT HYDROSTATIC TEST WATER TO SURFACE WATER

APPENDIX D

POST CONSTRUCTION BMPs

Salinity Management Pipeline, Phase 2c
(Specifications No. 496)
Post-Construction BMPs

1. Repaving
2. Hydroseeding in unpaved areas that are disturbed by construction

APPENDIX E

VENTURA COUNTY APCD RULE 55, FUGITIVE DUST

VENTURA COUNTY AIR POLLUTION CONTROL DISTRICT

RULE 55 – FUGITIVE DUST
(Adopted 6/10/08)

A. Applicability

The provisions of this rule shall apply to any operation, disturbed surface area, or man-made condition capable of generating fugitive dust, including bulk material handling, earth-moving, construction, demolition, storage piles, unpaved roads, track-out, or off-field agricultural operations.

B. General Requirements – All Fugitive Dust Sources

1. **Visible Dust Beyond the Property Line:** No person shall cause or allow the emissions of fugitive dust from any applicable source such that the dust remains visible beyond the midpoint (width) of a public street or road adjacent to the property line of the emission source or beyond 50 feet from the property line if there is not an adjacent public street or road.

2. **Opacity:** No person shall cause or allow the emissions of fugitive dust from any applicable source such that the dust causes 20 percent opacity or greater during each observation and the total duration of such observations (not necessarily consecutive) is a cumulative 3 minutes or more in any one (1) hour. Only opacity readings from a single source shall be included in the cumulative total used to determine compliance.

3. **Track-Out**

a. No person shall allow track-out to extend 25 feet or more in length unless at least one of the following three control measures is utilized:

i. **Track-Out Area Improvement**: Pave or apply chemical stabilization at sufficient concentration and frequency to maintain a stabilized surface starting from the point of intersection with public paved surface, and extend for a centerline distance of at least 100 feet with an acceptable width to accommodate traffic ingress and egress from the site.

ii. **Track-Out Prevention:** Check and clean the undercarriage and wheels on all vehicles before leaving unpaved surface or install a properly functioning and well-maintained track-out control device(s) that prevents track-out of soil onto paved public roads.

iii. **Track-Out Removal**: Remove track-out from pavement as soon as possible but no later than one hour after it has been deposited on the paved road. If a street sweeper is used to remove any track-out, only

PM10-efficient street sweepers certified to meet South Coast AQMD Rule 1186 requirements shall be used. The make and model information and certification documentation of any sweeper used shall be made available upon request.

b. Notwithstanding the preceding, all track-out shall be removed at the conclusion of each workday or evening shift subject to the same condition regarding PM-10 efficient street sweepers as outlined in Subsection B.3.a.iii. The use of blowers for removal of track-out is expressly prohibited under any circumstances.

C. Specific Activity Requirements

1. **Earth-Moving:** No person shall engage in earth-moving activities in a manner that creates visible dust emissions over 100 feet in length.

2. **Bulk Material Handling Facilities Track-Out Prevention:** No person shall conduct an active operation with a monthly import or export of 2150 cubic yards or more of bulk material without utilizing at least one of the following measures at each vehicle egress from the site to a public paved road:

a. Install a pad consisting of washed gravel (minimum size: one inch) maintained in a clean condition to a depth of at least six inches and extending at least 30 feet wide and at least 50 feet long.

b. Pave the surface at least 100 feet long and at least 20 feet wide.

c. Utilize a wheel shaker/wheel spreading device, also known as a rumble grate, consisting of raised dividers (rails, pipe, or grates) at least 24 feet long and sufficient width to allow all wheels of vehicle traffic to travel over grate to remove bulk material from tires and vehicle undercarriages before vehicles exit the site.

d. Install and utilize a wheel washing system to remove bulk material from tires and vehicle undercarriages before vehicles exit the site.

e. Any other control measure or device that prevents track-out onto public paved roads.

3. **Truck Hauling:** No person (including facility or site operator) shall load or allow the loading of bulk materials or soil onto outbound trucks unless at least one of the following dust prevention techniques is utilized:

a. Use properly secured tarps or cargo covering that covers the entire surface area of the load or use a container-type enclosure.

b. Maintain a minimum of 6 inches of freeboard below the rim of the truck bed where the load touches the sides of the cargo area and insure that the peak of the load does not extend above any part of the upper edge of the cargo area.

c. Water or otherwise treat the bulk material to minimize loss of material to wind or spillage.

d. Other effective dust prevention control measures.

D. Exemptions

1. This rule shall not apply to:

a. On-field agricultural operations.

b. Off-field agricultural operations necessary to minimize adverse effects on agricultural or horticultural commodities caused during officially declared disasters or states of emergency.

c. Active operations conducted during emergency life-threatening situations, or in conjunction with any officially declared disaster or state of emergency.

d. Active operations conducted by essential service utilities to provide electricity, natural gas, telecommunication, water or sewer during periods of service outages or emergency disruptions.

e. Weed abatement operations provided that:

i. Mowing, cutting or other similar process is used which maintains weed stubble at least three inches above the soil, or

ii. Any disking or similar operation where effective dust emission prevention control measures are used.

f. Abrasive blasting operations meeting the requirements of Rule 74.1.

g. Unpaved service roads having traffic volume of 20 vehicle trips or fewer per day used by one or more public agencies for inspection of infrastructure and not used for construction or maintenance-related activity.

h. Motion picture, television, or video production activities when dust emissions are required for visual effects. In order to obtain this exemption, the APCO must receive notification in writing at least 72 hours in advance of any such activity and no nuisance results from such activity.

i. Temporary earth coverings of public paved roadways where such coverings are approved by a local government agency for protection of the roadway, and where such roadway is closed to through traffic and visible roadway dust is removed within one day following cessation of activities.

j. Any paved road unless it has track-out or any publicly-owned unpaved road.

k. Demolition operations using blasting explosives, which have been permitted by the California Division of Industrial Safety.

l. The disturbance (i.e., disking, ripping, or scraping) of spreading ground lands in preparation for percolative groundwater recharge. Spreading ground lands are ponds, a system of ponds, or basins into which surface water is introduced for the purpose of allowing or enhancing the infiltration of water into underlying aquifers.

2. **Frequently Traveled Private Unpaved Road Conditional Exemption:** The requirements in Subsections B.1 (Visible Dust Beyond the Property Line) and B.2 (Opacity) shall not apply to fugitive dust from frequently traveled (more than 20 vehicles per day passing in either direction) unpaved private roads if the operator has covered them with a low silt content material such as recycled road base or gravel to a minimum of four inches; or has implemented all of the following control measures:

a. **Control Speed**: Control speed to 15 miles per hour or less on unpaved roads through worker notification, signage, and any other necessary means.

b. **Restrict Access**: Restrict access to private unpaved roads currently used by the public either through signage or physical access restrictions.

c. **Road Treatments**: Treat unpaved and uncovered frequently traveled roads with water, mulch, or a non-toxic chemical dust suppressant that complies with all applicable air and water quality government standards. If treated, roads shall be treated in a manner that will avoid the sticking of mud to tires that will be carried onto paved public roads.

3. **Lightly Traveled Unpaved Private Road Conditional Exemption:** The requirements in Subsections B.1 (Visible Dust Beyond the Property Line) and B.2 (Opacity) shall not apply to fugitive dust from lightly traveled unpaved private roads if the operator has implemented both of the following control measures:

a. **Control Speed**: Control speed to 15 miles per hour or less on unpaved roads through worker notification, signage, and any other necessary means.
b. **Restrict Access**: Restrict access to private unpaved roads currently used by the public either through signage or physical access restrictions.

4. **Storage Pile Conditional Exemption**: The requirements in Subsections B.1 (Visible Dust Beyond the Property Line) and B.2 (Opacity) shall not apply to fugitive dust from storage piles if the operator has implemented at least one of the following control measures:

a. **Wind Sheltering:** Enclose material in a three or four sided barrier equal to the height of the material.

b. **Watering**: Apply water at a sufficient quantity and frequency to prevent wind driven dust.

c. **Chemical Stabilization:** Apply a non-toxic dust suppressant that complies with all applicable air and water quality government standards at a sufficient quantity and frequency to prevent wind driven dust.

d. **Covering:** Install and anchor tarps, plastic, or other material to prevent wind driven dust.

5. **High Wind Exemption:** The requirements in Subsections B.1 (Visible Dust Beyond the Property Line). B.2 (Opacity), and C.1 (Earth-Moving) shall not apply to fugitive dust when on-site wind speed exceeds 25 miles per hour (mph) for at least 5 minutes in any one hour period as measured by an anemometer with a minimum resolution of 1.0 mph provided:

a. Applicable control measures outlined in Table 1 have been implemented, and
b. Daily records of specific dust control measures have been maintained.

6. **Track-out Exemption:** The provisions of Subsection B.3 (Track-Out) shall not apply to on-road vehicles (trucks and passenger vehicles) associated with agricultural operations that have caused track-out due to excessively muddy conditions resulting from rainfall.

E. Recordkeeping Requirements

1. **Bulk Material Handling Records:** Any operator handling bulk materials and having an APCD Permit to Operate shall keep a monthly log, available upon request, containing or referencing the following information:

a. Operator name, location of operation, and dates of operation.

b. Amount (in yards) of bulk material imported or exported per month.

c. Diagram or map of all egress sites to a public paved road and description of corresponding track-out control measure, if required by this rule.

2. **Frequently Traveled Unpaved Road Exemption Records**: Any operator or owner of an private unpaved road claiming exemption from the requirements in Subsection B.1 (Visible Dust Beyond the Property Line) and Subsection B.2 (Opacity) shall keep the following records:

a. Operator name, location of operation, dates when road is open to travel.

b. List and diagram of unpaved private roads that have more than 20 vehicle trips per day with corresponding method and description of fugitive dust control. If an unpaved private road is being treated, then describe the method used to control speed and restrict access.

3. **Storage Pile Exemption Records**: Any owner or operator of a storage pile claiming the exemption from the requirements in Subsection B.1 (Visible Dust Beyond the Property Line) and Subsection B.2 (Opacity) shall keep the following records:

a. Operator name, location of operation, dates of operation

b. Description of control measure used to minimize fugitive dust including amount of material applied and frequency of application if watering or chemical suppressants are used.

4. **High Wind Exemption Records**: Any operator claiming the high wind exemption in Subsection D.5 shall keep daily records of specific dust control actions taken.

5. **Track-Out Area Exemption Records:** Any operator claiming an exemption from track-out area requirements in Subsection B.3.a shall keep the following records:

a. Operator name, location of operation, and dates of operations.

b. Description of control measure used in the improvement of the track-out area or control measure used to prevent track-out.

6. **Dust Suppressant Records:** Any person using dust suppressants shall keep the following records: Description of dust control measure; Location and extent of coverage; Date, amount, and frequency of application of dust suppressant; and Manufacturer's dust suppressant product information sheets.

7. Any recordkeeping required by this rule shall be made available to APCD compliance personnel upon request. Records shall be retained for a minimum of two years.

F. Test Methods

Compliance with the opacity limit in Subsection B.2 shall be determined using EPA Method 9 with the following modifications:

1. Position: Stand at least 16.5 feet from the plume(s) with the sun oriented in the 140° sector to your back. If feasible, make opacity observations so your line of sight is approximately perpendicular to the direction of plume travel. To the extent possible, position yourself to make opacity observations using a contrasting background.

2. Field Records: Note the following on a record sheet:

   a. Description and location of activity generating emissions, and method of control used, if any.

   b. Observer's name, certification data, and affiliation, and a sketch of the observer's position relative to the dust generating activity and the sun, including estimated distances and direction to the plume.

   c. Time that reading began, approximate wind speed and direction, description of the sky condition (presence and color of clouds), color of the plume, and type of background.

3. Observations: For each reading, make the observation at the highest opacity in the dust plume starting at an elevation line 5 feet above the emission source. Do not look continuously at the source, but make momentary observations once every 15 seconds. Record each observation to the nearest 5 percent. Each reading represents a 15 second period. If multiple plumes exist, do not include more than one plume in the line of sight at one time.

4. Compliance Determination: If the observer records twelve (12) readings of 20 percent or greater during a one-hour period, the source is not in compliance and observations may stop. The 20 percent or greater opacity readings are not required to be consecutive.

5. Only observers certified by the California Air Resources Board, or the U.S. Environmental Protection Agency may determine compliance with opacity limits.

G. Violations

Failure to comply with any provision of this rule is a violation of this rule.

H. Definitions

1. "Active Operation": Any source capable of generating fugitive dust, including, but not limited to, bulk material handling, earth-moving activities, construction or demolition activities, or vehicular movement on unpaved surfaces.

2. "Bulk Material": Sand, gravel, aggregate material less than two inches in length or diameter, and other organic or inorganic particulate matter.

3. "Construction/Demolition Activities": Any on-site mechanical activities conducted in preparation of, or related to, the building, alteration, rehabilitation, demolition, or improvement of property, including, but not limited to, grading, excavating, loading, crushing, cutting, planing, or ground breaking.

4. "Disturbed Surface Area": This means a portion of the earth's surface which has been physically moved, uncovered, destabilized, or otherwise modified from its undisturbed natural soil condition, thereby increasing the potential for emission of fugitive dust. This definition excludes those areas which have:

   a. Been restored to a natural state, such that the vegetative ground cover and soil characteristics are similar to adjacent or nearby natural conditions;

   b. Been paved or otherwise covered by a permanent structure.

5. "Earth-Moving Activities": This means the use of any equipment for any activity where soil is being moved or uncovered, and shall include, but not be limited to the following: grading, earth cutting and filling operations, loading and unloading of dirt, adding to or removing from open storage piles, landfill operations, mining operations, and weed abatement operations.

6. "Frequently-Traveled Unpaved Private Road": For the purpose of defining the conditional exemption in Subsection D.2 , any private unpaved road where the count of vehicles traveling in either direction on the road exceeds 20 in any 24 hour period .

7. "Fugitive Dust": Any solid particulate matter that becomes airborne, other than emitted from an exhaust stack, directly or indirectly as a result of the activities of any person(s).

8. "Lightly-Traveled Unpaved Private Road": For the purpose of defining the conditional exemption in Subsection D.3, any private unpaved road where the count of vehicles traveling in either direction on the road is 20 or less in any 24 hour period.

9. "Off-field Agricultural Operations": Any activities excluding those considered by this rule to be on-field agricultural operations.

10. "On-field Agricultural Operations": Activities, excluding travel on field access roads, conducted solely for the purpose of preparing land for the growing of agricultural or horticultural commodities, tree fruits, or raising of fowl or animals, such as:

    a. Brush or timber clearing, grubbing, scraping, ground excavation, land leveling, grading, turning under stalks, disking or tilling.

    b. Drying, pre-cleaning, handling, or storing of agricultural commodity material on the field where it was harvested.

    c. Handling of fowl, or animal feed materials at sites where animals or fowl are raised.

    d. Disturbing of cultivated land as a result of fallowing, seeding, planting, plowing, disking, fertilizing the soil, cultivating, irrigating, controlling weeds, thinning, heating, pruning, fumigating, spraying, dusting, or harvesting.

11. "Paved Road": A public or private improved street, highway, alley, public way, or easement that is covered by typical roadway materials including, but not limited to, asphalt paving or concrete. For this purpose of this rule, roads covered with recycled road base or gravel are not considered to be paved.

12. "PM-10 Efficient Street Sweeper": Any street sweeper certified by the South Coast AQMD to meet their Particulate Matter (10 microns and less) capture efficiency criteria outlined in SCAQMD Rule 1186 Appendix A.

13. "Source": A source includes all activities and operations that are located on contiguous property under common ownership or control, and includes associated facility-access and haul roads.

14. "Stabilized Surface": Any surface that has been treated, worked, or modified to increase soil stability in order to limit fugitive dust emissions. Methods used to stabilize surface include but are not limited to the following: watering, dust palliatives, vegetation, aggregates, and paving.

15. "Storage Pile": Any accumulation of bulk material or soil, which attains a height of three feet or more and a total surface area of 150 or more square feet.

16. "Track-Out": Any material that adheres to and agglomerates on the exterior surface or tires of motor vehicles, haul trucks, or mobile equipment that have been released onto a

named, numbered, or lettered public paved road and can be removed by a PM-10 efficient street sweeper under normal operating conditions.

I. Compliance Schedule:

The requirements of this rule shall become effective on October 8, 2008.

J. Compliance Status

Compliance with this rule shall not guarantee that a person will be in compliance with any other district rule or state regulation, including but not limited to, Rule 50 (Opacity), Rule 51 (Nuisance), Health and Safety Code Section 41700 (Nuisance), or Health and Safety Code Section 41701 (Opacity).

Table 1
Control Measures Needed to Qualify for High Wind Exemption in Subsection D.5

FUGITIVE DUST SOURCE CATEGORGY	CONTROL MEASURES
Earth-Moving	1. Cease all active operations; OR 2. Apply water to soil not more than 15 minutes prior to earth-moving activities.
Disturbed Surface Area	1. On the last day of active operations prior to any Sunday, 1-day holiday, or any other period when active operations will not occur for at least four consecutive days, apply water with a mixture of chemical stabilizer diluted to not less than 5 percent by volume of the chemical stabilizer or to chemical stabilizer manufacturer specifications; OR 2. Apply chemical stabilizers at least 30 minutes prior to the wind event; OR 3. Apply water to all unstabilized disturbed areas at least every 4 hours during the wind event. If there is any evidence of wind-driven dust, water frequency is increased until wind-driven dust is minimized; OR 4. Establish a vegetative ground cover within 21 days after active operations have ceased. Ground cover must be of sufficient density to expose less than 30 percent of unstabilized ground within 90 days of planting, and at all times thereafter.
Unpaved Roads	1. Apply chemical stabilizers prior to allowing traffic; OR 2. Apply water at least twice per hour during active operations;OR 3. Stop all vehicular traffic.
Open Storage Piles	1. Apply water at least twice per hour during the wind event; OR 2. Install temporary coverings.

APPENDIX F

LABOR COMPLIANCE PROGRAM

LABOR COMPLIANCE PROGRAM HANDOUT

The Water District has hired Contractor Compliance and Monitoring, Inc. (CCMI) to assist the District in the Labor Compliance Program Mandate imposed by the California Legislature on this project. The provisions of this law require all contractors to comply with the current prevailing wage rate requirements and all apprenticeship requirements.

The submission of complete and accurate certified payrolls records, including fringe benefit statements, DAS-140, CAC2 and similar forms are a prerequisite to receiving progress payments. Failure to comply with these rules and regulations can result in monies being withheld and penalties imposed. Contractors are advised to be familiar with Labor Code Section 1720 et seq and all applicable regulations relating to the workers on public works projects. Relevant information is also available at: www.dir.ca.gov

At the time the General Contractor submits any progress payment to the District, the following documents are to be submitted by the General Contractor **directly to CCMI** for all work performed, including work by subcontractors:

- 1 copy of the progress payment request
- All applicable certified payroll forms (original signatures -no faxes or copies). [1]
- All applicable fringe benefit statements
- Training contribution verification (can be listed on Fringe Benefit form or on CAC2 form)
- DAS-140 form for each craft employed on the project (DAS-140 need only be submitted once by each subcontractor, but must be submitted for each craft.)
- DAS-142 request to train apprentices (need only be submitted once by each subcontractor for each apprenticeable trade)
- Electrician Certification – Those employing electricians may need to submit additional data to verify the certification status of those employed

Subcontractors are to submit all documentation directly to the General Contractor in a timely (not less than monthly) basis. The General Contractor will then forward all information to CCMI. Failure to submit these documents to CCMI may result in the progress payment being delayed.

Should you have any questions or concerns, you are welcome to contact:
Contractor Compliance and Monitoring, Inc. (CCMI) directly at:

CONTRACTOR COMPLIANCE AND MONITORING, INC.
1200 Sixth Avenue, Suite 200
Belmont, CA 94002
Phone: (650) 551-5583
Fax: (650)551-5584

[1] If you submit progress payment request on the 20th-25th of the month, the certified payrolls submitted should include all weeks from the last submission of payrolls through the 2nd payroll week of the month. CCMI recognizing a 10 day to two week lag in certified payrolls from the date of the submission of the progress payment.

K

CHECKLIST OF LABOR LAW REQUIREMENTS FOR REVIEW AT JOB START MEETINGS

(In accordance with CCR Section 16430)

The federal and state labor law requirements applicable to the contract are composed of, but not limited to, the following:

1. Payment of Prevailing Wage Rates

   The award of a public works contract requires that all workers employed on the project be paid not less than the specified general prevailing wage rates by the contractor and its subcontractors. Prevailing wage determinations for this project can be obtained at: **www.dir.ca.gov.** This includes a total package including fringe benefits and training contributions which are paid to the employee or for the benefit of the employee to a bona fide ERISA approved or otherwise unconditionally paid for the benefit of the employee Trust Fund.

   The contractor is responsible for obtaining and complying with all applicable general prevailing wage rates for trades workers and any rate changes, which may occur during the term of the contract. Prevailing wage rates and rate changes are to be posted at the job site for workers to view. Or the contractor may post a notice stating where the prevailing wage determinations are available on the jobsite and the contractor shall provide access to such information upon reasonable notice.

2. Apprentices

   It is the duty of the contractor and subcontractors to employ registered apprentices on public works projects per Labor Code Section 1777.5; Contractors and subcontractors must submit proof of Request to Train Apprentices (DAS140) or other documentation for Division of Apprenticeship Standards approved apprenticeship programs. Apprentices are to be employed in all crafts and in all trades with approved training programs. Contactors are to employ apprentices on a ratio of 1 apprentice hour for every 5 journeymen hours or as otherwise approved by the DAS approved Apprenticeship Training Committee. Contractors and subcontractors who do not meet this ratio must submit documentation that apprentices were requested and were not provided and/or not available in sufficient number to meet this ratio. The submission of an accurate DAS142 meets this requirement. Additional documentation may be required to verify the apprenticeship status of employees.

3. Penalties

   Penalties, including forfeitures and debarment, shall be imposed for contractor/subcontractor failure to pay prevailing wages, failure to maintain and submit accurate certified payroll records upon request, failure to employ apprentices, and for failure to pay employees for all hours worked at the correct prevailing wage rate, in accordance with Labor Code Sections 1775, 1776, 1777.7, and 1813. Monetary penalties of $50 per day per worker shall be imposed for failure to pay correct prevailing wage; $25 per day per worker shall be imposed for overtime violated; $25 per day per worker for failure to provide certified payroll information; $100 per calendar day for noncompliance of Apprenticeship issues.

4. Certified Payroll Records

   Per Labor Code Section 1776, contractors and subcontractors are required to keep accurate payroll records which reflect the name, address, social security number, and work classification of each employee; the straight time and overtime hours worked each day and each week; the fringe benefits; and the actual per diem wages paid to each journeyperson, apprentice, worker, or other employee hired in connection with a public works project. A listing of all current prevailing wage determinations can be obtained from the Agency's main office or by accessing the Department of Industrial Relation's website at: www.dir.ca.gov

Employee payroll records shall be certified (signed under penalty of perjury by someone in authority at the company) and shall be made available for inspection at all reasonable hours at the principal office of the contractor/subcontractor, or shall be furnished to any employee, or to his or her authorized representative on request. Disclosure of certified payroll information to anyone other than the Awarding Body, its agent, or the Department of Industrial Relations requires that personal information about the employees (name, address and social security number) listed on the forms be redacted (omitted) to protect employee privacy.

Contractors and subcontractors shall maintain their certified payrolls on a weekly basis and shall submit said payrolls on a monthly basis in conjunction with contractors requests progress or final payment. In the event that there has been no work performed during a given week, the Certified Payroll Record shall be annotated "No Work" for that week. The Agency or its authorized representative is also authorized to request and review all related payroll records such as time cards, cancelled checks, etc.

5. Nondiscrimination in Employment
   Prohibitions against employment discrimination are contained in Labor Code Sections 1735 and 1777.6; the Government Code; the Public Contracts Code; and Title VII of the Civil Rights Act of 1964, as amended. All contractors and subcontractors are required to implement equal employment opportunities as delineated below:

   a. Equal Employment Poster
      The equal employment poster shall be posted at the job site in a conspicuous place visible to employees and employment applicants for the duration of the project. All other labor and employment related posters are also to be properly displayed on the jobsite.

6. Kickback Prohibited
   Per Labor Code Section 1778, contractors and subcontractors are prohibited from accepting, taking wages illegally, or extracting "kickback" from employee wages;

7. Acceptance of Fees Prohibited
   Contractors and subcontractors are prohibited from exacting any type of fee for registering individuals for public work (Labor Code Section 1779); or for filling work orders on public works contracts (Labor Code Section 1780);

8. Listing of Subcontractors
   Contractors are required to list all subcontractors hired to perform work on a public works project when that work is equivalent to more than one-half of one percent of the total effort (Public Contract Code Section 4100, et seq.);

9. Proper Licensing
   Contractors and subcontractors are required to be properly licensed. Penalties will be imposed for employing workers while unlicensed (Labor Code Section 1021 and Business and Professions Code Section 7000, et seq. under California Contractors License Law);

10. Unfair Competition Prohibited
    Contractors and subcontractors are prohibited from engaging in unfair competition (Business and Professions Code Sections 17200-17208);

11. Workers' Compensation Insurance
All contractors and subcontractors are required to be insured against liability for workers' compensation, or to undertake self-insurance in accordance with the provisions of Labor Code Section 3700 (Labor Code Section 1861);

12. OSHA
Contractors and subcontractors are required to comply with the Occupational, Safety and Health laws and regulations applicable to the particular public works project.

13. Prompt Payment of Subcontractors and Suppliers
Contractors are required by law to promptly pay their subcontractors and suppliers within ten (10) days of receipt of any progress payment from the Public Agency. Likewise the subcontractor and supplier are required to pay their respective subcontractors and suppliers within ten (10) days of receipt of payment from the general contractor. When the payment to the contractor is a release of final retention on the project, those funds must be paid within seven (7) days of receipt.

14. IRCA
Pursuant to the Immigration Reform and Control Act of 1986, employers are required to verify that all employees working on public works contracts are legally able to work in the United States. Employers shall keep on file appropriate I-9 forms and documentation for all workers employed on the jobsite and make such forms available to inspection and review by the LCO upon request.

In accordance with federal and state laws, and with Agency's policy and contract documents, the undersigned contractor herein certifies that it will comply with the foregoing labor law requirements; and fully understands that failure to comply with these requirements will subject it to the penalties cited herein.

15. Jobsite Interviews
The Labor Compliance Program requires that a sampling of employees is interviewed each month. To the extent practical, we will attempt to notify the General Contractor prior to arriving on the jobsite.

16. Certification of Electricians
Those employing electricians must comply with employment testing and certification requirements for electricians. Additional information may be required to verify the certification status of those employed.

The General Contractor is required to post the name and contact information of the LCP provider on the jobsite.

In accordance with federal and state laws, and with the Public Agency's policy and contract documents, the undersigned contractor herein certifies that it will comply with the foregoing labor law requirements; and fully understands that failure to comply with these requirements will subject it to the penalties cited herein. The contractor also herein certifies that it has been provided with a copy of the Labor Compliance Program Package for Contractors with includes:

1. Labor Law Requirements Checklist (included herein)
2. The Location of Applicable General Prevailing Wage Rate Determinations
3. Blank Certified Payroll Record form
4. Fringe Benefit Statements
5. State apprenticeship contribution form (CAC2)

6. State apprenticeship requirements and form to register apprentices (DAS-140)
7. Request for apprentices (DAS-142)
8. Copy of the Labor Code relating to Public Works and Public Agencies (Part 7, Chapter 1, Sections 1720-18610 can be found at www.dir.ca.gov.

IT IS THE CONTRACTOR'S RESPONSIBILITY TO PROVIDE COPIES OF THE LABOR COMPLIANCE PROGRAM PACKAGE TO ALL LISTED SUBCONTRACTORS AND TO ANY SUBSTITUTED SUBCONTRACTORS.

Project Name and Number:_____

Public Agency:_____

Contractor: Name _____

Contractor Address: _____

Contractor Phone:_____ Fax:_____

License Number: _____Date: _____

_____

Signature/Name/Title of Contractor Authorized Representative

Additional Explanation And Instructions Relating To Required LCP Forms and Information

Certified payroll or non performance documentation - is required for each week from the beginning of the contractor's /subcontractor's work on the project until completion of that contractor's/subcontractor's work. These documents need to reflect a consistent 7 day work week for the entirety of the project. The certified payroll forms need to be complete, listing the employee's correct name, address, social security number, hours worked per day, total hours worked per week, wages, deductions and check number. It is critical that the employee's craft classification be listed correctly. Just listing "Journeyman" or "Laborer" is not sufficient. Many trades have sub-classifications and it is the contractor's obligation to correctly classify the employees. Employees must be classified and paid based on what type of work they are performing, not merely by title. It is acceptable for an employee to work in more than one trade category per day, but it is the employer's obligation to keep accurate records of the different type of work performed by the employee.

Please be aware non performance statements must be submitted for weeks in which no work is performed. More information about trade classifications and wage rates can be found at www.dir.ca.gov.

Fringe Benefit Statement - In order to complete a payroll audit, we need a copy of the fringe benefit statement listing the fringes being paid to each employee or employees on each trade. You are not required to use the worksheet in the packet, however all the information on that worksheet needs to be included in the documentation we receive. This should show an hourly breakdown of the specific contributions (health, pension, etc.) for each trade and the addresses of the plans being paid into. For contractors who pay medical benefits directly to a medical plan, such as Kaiser or Blue Shield, the monthly payment for each employee must be amortized into an hourly rate. (For example: Joe's health premium is $300 a month, that rate multiplied by 12 (months) divided by 2080 (hours) yields an hourly rate of $1.72 per hour). Similar amortization is allowed for vacation and holiday time paid. Training contributions paid to an approved apprenticeship committee needs to be listed as a separate item on this form (i.e. not just training/other together).

Additional Explanation And Instructions Relating To Required LCP Forms and Information (cont.)

Apprenticeship

DAS 140* - is a document required by the Division of Apprenticeship Standards (DAS) and must be completed by all contractors, on each project, with a separate form for each apprenticable trade employed. This form registers Contractors for the project. Please make sure ALL fields are complete on this form with accurate information, such as dates and times to be employed. The State requires that apprentices be requested at a 1 to 5 hourly ratio. While some areas have received a 1 to 5 person waiver, it is exactly that, a waiver. For this reason, putting "0" estimated apprentice hours, or N/A or TBD for dates and times is not acceptable. Please remember that this form requests "estimated" numbers.

This form is to be sent to an approved apprenticeship program, with a copy sent to our office. To locate apprenticeship programs approved by the Division of Apprenticeship Standards you can go to www.dir.ca.gov and look under the apprenticeship heading for a list (by county and by trade) of all approved apprenticeship committees/programs. This form MUST be completed and submitted even if you have no desire to employ apprentices.

DAS 142 or equivalent documentation* - proof of request for apprentices is required. Contractors must submit a separate form for each trade that they employ. If using the DAS 142, be sure all fields are complete. If submitting alternate documentation such as a phone log, be sure to include the same information as required by the DAS 142 – specifically the number of apprentices needed (0 is unacceptable), the craft or trade, the date, time, and address for apprentices to report.

CAC2 – Proof of Training Contribution – This document is required by all contractors which are sending their training contributions to the California Apprenticeship Council. If the training contributions are being sent to an apprenticeship program, then the training amount must be reported on the fringe benefit statement.

* * * * *

* DAS-140 and DAS-142 forms are not required when the general contract is less than $30,000 or when the company performing the work is a sole proprietor and is the only worker employed by that company on the project

PUBLIC WORKS CONTRACT AWARD INFORMATION

Contract award information must be sent to your Apprenticeship Committee if you are approved to train. If you are not approved to train, you must send the information (which may be this form) to ALL applicable Apprenticeship Committees in your craft or trade in the area of the site of the public work. Go to: http://www.dir.ca.gov/das/PublicWorksForms.htm for information about programs in your area and trade. You may also consult your local Division of Apprenticeship Standards (DAS) office whose telephone number may be found in your local directory under California, State of, Industrial Relations, Division of Apprenticeship Standards.

Do not send this form to the Division of Apprenticeship Standards.

NAME OF YOUR COMPANY	CONTRACTOR'S STATE LICENSE NO
MAILING ADDRESS- NUMBER & STREET, CITY, ZIP CODE	AREA CODE & TELEPHONE NO.
NAME & ADDRESS OF PUBLIC WORKS PROJECT	DATE YOUR CONTRACT EXECUTED
	DATE OF EXPECTED OR ACTUAL START OF PROJECT
NAME & ADDRESS OF PUBLIC AGENCY AWARDING CONTRACT	ESTIMATED NUMBER OF JOURNEYMEN HOURS
	OCCUPATION OF APPRENTICE
THIS FORM IS BEING SENT TO: (NAME & ADDRESS OF APPRENTICESHIP PROGRAM(S))	ESTIMATED NUMBER OF APPRENTICE HOURS
	APPROXIMATE DATES TO BE EMPLOYED

This is not a request for dispatch of apprentices.

Contractors must make a separate request for actual dispatch, in accordance with Section 230.1(a) California Code of Regulations

Check One Of The Boxes Below

1. ☐ We are already approved to train apprentices by the _____ Apprenticeship Committee. We will employ and train under their Standards. Enter name of the Committee

2. ☐ We will comply with the standards of _____ Apprenticeship Committee for the duration of this job only. Enter name of the Committee

3. ☐ We will employ and train apprentices in accordance with the California Apprenticeship Council regulations, including § 230.1 (c) which requires that apprentices employed on public projects can only be assigned to perform work of the craft or trade to which the apprentice is registered and that the apprentices must at all times work with or under the direct supervision of journeyman/men.

Signature _____ *Date* _____

Typed Name _____

Title _____

State of California - Department of Industrial Relations DIVISION OF APPRENTICESHIP STANDARDS

REQUEST FOR DISPATCH OF AN APPRENTICE

Do not send this form to DAS

You may use this form to request dispatch of an apprentice from the Apprenticeship Committee in the craft or trade in the area of the public work. Go to: http://www.dir.ca.gov/DAS/PublicWorksForms.htm for information about programs in your area and trade. You may also consult your local Division of Apprenticeship Standards (DAS) office whose telephone number may be found in your local directory under California, State of, Industrial Relations, Division of Apprenticeship Standards.

Date: _____

To Applicable Apprenticeship Committee: _____

Address: _____

Telephone: _____ Fax: _____

Contractor Requesting Dispatch: _____

Address: _____

Telephone: _____ Fax: _____

Person making request: _____

Number of Apprentice(s) Needed _____ Craft or Trade _____

Date Apprentice(s) to Report: _____ (48 hours notice required)

Name of Person to Report to: _____

Address to Report to
if different from above: _____

Time to Report: _____

You may use this form, or make a verbal or written request, to ask for the dispatch of an apprentice. Please take note of California Code of Regulations, *Title 8, § 230.1 (a)* which says in part: *if in response to a written request an Apprenticeship Committee does not dispatch any apprentice to a contractor who has agreed to employ and train apprentices in accordance with either the Apprenticeship Committee's Standards or these regulations within 72 hours of such request (excluding Saturdays, Sundays and holidays) the contractor shall not be considered in violation of this section as a result of failure to employ apprentices ...*

State of California
Department of Industrial Relations
California Apprenticeship Council
P.O. Box 420603
San Francisco, CA 94142

TRAINING FUND CONTRIBUTIONS

Please use a separate ***form*** for each jobsite, listing the occupations for the jobsite. One ***check*** payable to the California Apprenticeship Council may be submitted for all jobsites and/or occupations. Training fund contributions are ***not accepted*** by the California Apprenticeship Council for federal public works projects, or for non-apprenticeable occupations such as utility technicians, teamsters, etc

California Apprenticeship Council

NAME AND ADDRESS OF CONTRACTOR/SUB CONTRACTOR MAKING CONTRIBUTION	CONTRACTOR'S LICENSE NUMBER
	CONTRACT OR PROJECT NUMBER
NAME AND ADDRESS OF PUBLIC AGENCY AWARDING CONTRACT	JOBSITE LOCATION (INCLUDE COUNTY) IF APPLICABLE - GIVE NAME OF SCHOOL, HOSPITAL, BUILDING, etc.
	PERIOD COVERED BY CONTRIBUTION (FROM - TO)

CLASSIFICATIONS OF WORKERS (CARPENTER, PLUMBER, ELECTRICIAN, ETC).	COUNTY WORK PERFORMED IN	HOURS	CONTRIBUTION RATE PER HOUR	AMOUNT
				0.00
				0.00
				0.00
				0.00
				0.00
				0.00
				0.00
			Total	$0.00

SIGNATURE PLEASE TYPE OR PRINT YOUR NAME	DATE
TITLE	AREA CODE & TELEPHONE NUMBER

CONTRACTOR FRINGE BENEFIT STATEMENT

Contract Number / Name:	Contract Location:	Today's Date:

Contractor / Subcontractor Name:	Business Address:

In order that the proper Fringe Benefit rates can be verified when checking payrolls on the above contract, the hourly rates for fringe benefits, subsistence and/or travel allowance payment made for employees on the various classes of work are tabulated below.

Classification:	Effective Date:	Subsistence or Travel Pay: $

FRINGE BENEFITS			
Health & Welfare	$	PAID TO:	Name: Address:
Pension	$	PAID TO:	Name: Address:
Vacation/ Holiday	$	PAID TO:	Name: Address:
Training and/or Other	$	PAID TO:	Name: Address:

Classification:	Effective Date:	Subsistence or Travel Pay: $

FRINGE BENEFITS			
Health & Welfare	$	PAID TO:	Name: Address:
Pension	$	PAID TO:	Name: Address:
Vacation/ Holiday	$	PAID TO:	Name: Address:
Training And/or Other	$	PAID TO:	Name: Address:

Classification:	Effective Date:	Subsistence or Travel Pay: $

FRINGE BENEFITS			
Health & Welfare	$	PAID TO:	Name: Address:
Pension	$	PAID TO:	Name: Address:
Vacation/ Holiday	$	PAID TO:	Name: Address:
Training And/or Other	$	PAID TO:	Name: Address:

Supplemental statements must be submitted during the progress of work should a change in rate of any of the classifications be made.

Submitted: Contractor / Subcontractor	By: Name / Title

California Department of Industrial Relations

(Reduced by Antioch Unified Public Agency)

PUBLIC WORKS PAYROLL REPORTING FORM

Page of

NAME OF CONTRACTOR OR SUB CONTRACTOR

CONTRACTORS LICENSE #
SPECIALTY LICENSE #

ADDRESS

PAYROLL NO.

FOR WEEK ENDING

SELF-INSURED CERTIFICATE #

WORKERS' COMPENSATION POLICY #

PROJECT OR CONTRACT NO.

PROJECT AND LOCATION

(1) NAME, ADDRESS AND SOCIAL SECURITY NUMBER OF EMPLOYEE	(2) NO. OF WITH - HOLDING EXEMPTIONS	(3) WORK CLASSIFICATION		(4) Day M	T	W	TH	F	S	S	(5) TOTAL HOURS	(6) HOURLY RATE OF PAY	(7) GROSS AMOUNT EARNED THIS PROJECT	ALL PROJECTS	(8) DEDUCTIONS, CONTRIBUTIONS AND PAYMENTS FED TAX	FICA (SOC SEC)	STATE TAX	SDI	VAC/ HOL	HEALTH & WELF	PENSION	(9) NET WGS PAID FOR WEEK	CHECK NO.
				Date																			
				Hours Worked Each Day																			
			S																				
			O												TRANING	FUND ADMIN	DUES	TRV/ SUBS	SAVINGS	OTHER*	TOTAL DED-UCTIONS		
													THIS PROJECT	ALL PROJECTS	FED TAX	FICA (SOC SEC)	STATE TAX	SDI	VAC/ HOL	HEALTH & WELF	PENSION		
			S																				
			O												TRANING	FUND ADMIN	DUES	TRV/ SUBS	SAVINGS	OTHER*	TOTAL DED-UCTIONS		
													THIS PROJECT	ALL PROJECTS	FED TAX	FICA (SOC SEC)	STATE TAX	SDI	VAC/ HOL	HEALTH & WELF	PENSION		
			S																				
			O												TRANING	FUND ADMIN	DUES	TRV/ SUBS	SAVINGS	OTHER*	TOTAL DED-UCTIONS		
													THIS PROJECT	ALL PROJECTS	FED TAX	FICA (SOC SEC)	STATE TAX	SDI	VAC/ HOL	HEALTH & WELF	PENSION		
			S																				
			O												TRANING	FUND ADMIN	DUES	TRV/ SUBS	SAVINGS	OTHER*	TOTAL DED-UCTIONS		

Form A 1-131 (New 2-80)
(form has been reduced to fit page)

S = Straight Time
O = Overtime
SDI = State Disability Insurance

*OTHER - Any other deductions, contributions and/or payment whether or not included or required by prevailing wage determinations must be separately listed. Use extra sheet if necessary

CERTIFICATION must be completed

I, _____ (Name - Print), the undersigned, am _____ (position with business) with the authority to act for and on behalf of _____ (name of business and/or contractor).

certify under penalty of perjury that the records or copies thereof submitted and consisting of _____ are the originals or true, full and correct copies of the originals which depict the payroll
(description, no. of pages)
record(s) of the actual disbursements by way of cash, check,or whatever form to the individual or individuals named.

Date: _____ Signature: _____

A public entity may require a more strict and/or more extensive form of certification.

GENERAL PREVAILING WAGE DETERMINATION MADE BY THE DIRECTOR OF INDUSTRIAL RELATIONS
PURSUANT TO CALIFORNIA LABOR CODE PART 7, CHAPTER 1, ARTICLE 2, SECTIONS 1770, 1773 AND 1773.1
FOR COMMERCIAL BUILDING, HIGHWAY, HEAVY CONSTRUCTION AND DREDGING PROJECTS

CRAFT: # CARPENTER

DETERMINATION: SD-23-31-4-2000-1
ISSUE DATE: February 22, 2000
EXPIRATION DATE OF DETERMINATION: June 30, 2000** The rate to be paid for work performed after this date has been determined. If work will extend past this
date, the new rate must be paid and should be incorporated in contracts entered into now. Contact the Division of Labor Statistics and Research for specific rates at (415) 703-4774.

LOCALITY: All localities within Contra Costa County

CLASSIFICATION	Basic	Employer Payments: Health	Pension	Vacation/	Training	Straight-Time: Hours	Total	Overtime Hourly Rate: Daily	Saturday a	Sunday
(JOURNEYPERSON)	Hourly Rate	and Welfare		Holiday			Hourly Rate	1 1.2X	1 1 2X	Holiday
ENGINEERING CONSTRUCTION										
Carpenter (Heavy and Highway work)	$25.25	2.30	1.01	2.72 b	.30	8	31.58	44.205	44.205	56.83
Light Commercial	20.40	2.30	1.01	2.72 b	.30	8	26.73	36.93	36.93	47.13
Bridge Carpenter (Highway work)	25.38	2.30	1.01	2.72 b	.30	8	31.71	44.40	44.40	57.09
Millwright	25.75	2.30	1.01	2.72 b	.30	8	32.08	44.955	44.955	57.83
Pile Driver	25.38	2.30	1.01	2.72 b	.30	8	31.71	44.40	44.40	57.09
Diver, Wet (up to 50 ft. depth)cd	55.76	2.30	1.01	2.72 b	.30	8	62.09	89.97	89.97	117.8
Diver, Standby	28.38	2.30	1.01	2.72 b	.30	8	34.71	48.90	48.90	63.09
Diver's Tender	27.38	2.30	1.01	2.72 b	.30	8	33.71	47.40 47.40 61.09		

DETERMINATION: SD-23-31-4-2000-1A
ISSUE DATE: February 22, 2000
EXPIRATION DATE OF DETERMINATION: July 1, 2000** The rate to be paid for work performed after this date has been determined. If work will extend past this date,
the new rate must be paid and should be incorporated in contracts entered into now. Contact the Division of Labor Statistics and Research for specific rates at (415) 703-4774.

LOCALITY: All localities within Antioch County

BUILDING CONSTRUCTION										
Carpenter	$23.40	2.30	1.01	2.17 b	.30	8	29.18	40.88	40.88	52.58
Light Commercial	18.72	2.30	1.01	2.17 b	.30	8	24.50	33.86	33.86	43.22

DETERMINATION: SD-31-741-1-2000-1
ISSUE DATE: FEBRUARY 22, 2000
EXPIRATION DATE OF DETERMINATION: May 31, 2000* Effective until superseded by a new determination issued by the Director of Industrial Relations. Contact the
Division of Labor Statistics and Research (415) 703-4774 for the new rates after 10 days from the expiration date, if no subsequent determination is issued.

LOCALITY: All localities within Antioch County

Classification	Basic	Employer Payments: Health	Pension	Vacation/	Training	Straight-Time: Hours	Total	Overtime Hourly Rate: Daily	Saturday a	Sunday
(Journeyperson)	Hourly Rate	and Welfare		Holiday			Hourly Rate	1 1/2X	1 1/2X	Holiday
Terrazzo Installer	$29.55	2.30	1.01	1.72 b	-	8	34.58	49.355	49.355	64.13
Terrazzo Finisher	23.05	2.30	1.01	1.72 b	-	8	28.08	39.605	39.605	51.13

# Indicates an apprenticeable craft. Rates for apprentices are available in the General Prevailing Wage Apprentice Schedules. a Saturday in the same workweek may be worked at straight-time rate for the first 8 hours if the employee was unable to complete the 40 hours during the normal workweek. b Includes supplemental dues. c Shall receive a minimum of 8 hours pay for any day or part thereof. d For specific rates over 50 ft. depth, contact the Division of Labor Statistics and Research.

DESCRIPTION:

Engineering Construction
Refers to construction which requires a Class A license and includes bridges, highways, dams and also power plants and other heavy industrial type projects.

Building Construction
Requires a Class B license and includes non-residential buildings (such as hospitals, government buildings, public schools) and commercial buildings (with the exception
of industrial buildings).

SAMPLE

RECOGNIZED HOLIDAYS: Holidays upon which the general prevailing hourly wage rate for Holiday work shall be paid, shall be all holidays in the collective bargaining
agreement, applicable to the particular craft, classification, or type of worker employed on the project, which is on file with the Director of Industrial Relations. If the prevailing rate is not based on a collectively bargained rate, the holidays upon which the prevailing rate shall be paid shall be as provided in Section 6700 of the Government
Code. You may obtain the holiday provisions for the current determinations on the Internet at http://www.dir.ca.gov/DLSR/PWD. Holiday provisions for current or superseded
determinations may be obtained by contacting the Prevailing Wage Unit at (415) 703-4774.

TRAVEL AND/OR SUBSISTENCE PAYMENT: In accordance with Labor Code Sections 1773.1 and 1773.9, contractors shall make travel and/or subsistence payments to
each worker to execute the work. Travel and/or subsistence requirements for each craft, classification or type of worker may be obtained from the Prevailing Wage Unit at
(415) 703-4774.

The contractor also herein certifies that it has been provided with a copy of the Labor Compliance Program Package for Contractors with includes:

* Labor Law Requirements Checklist (included herein)
* The Location of Applicable General Prevailing Wage Rate Determinations
* Blank Certified Payroll Record form
* Fringe Benefit Statements
* State apprenticeship contribution form (CAC2)
* State apprenticeship requirements and form to register apprentices (DAS-140)
* Request for apprentices (DAS-142)
* Copy of the Labor Code relating to Public Works and Public Agencies (Part 7, Chapter 1, Sections 1720-18610 can be found at www.dir.ca.gov.

IT IS THE CONTRACTOR'S RESPONSIBILITY TO PROVIDE COPIES OF THE LABOR COMPLIANCE PROGRAM PACKAGE TO ALL LISTED SUBCONTRACTORS AND TO ANY SUBSTITUTED SUBCONTRACTORS.

Project Name and Number:_____

Public Agency:_____

Contractor: Name _____

Contractor Address: _____

Contractor Phone:_____Fax:_____

License Number: _____Date: _____

_____

Signature/Name/Title of Contractor Authorized Representative

This page intentionally left blank.