APPENDIX 3C-3

100% DESIGN PLANS FOR R4-6A

PART 2 OF 2

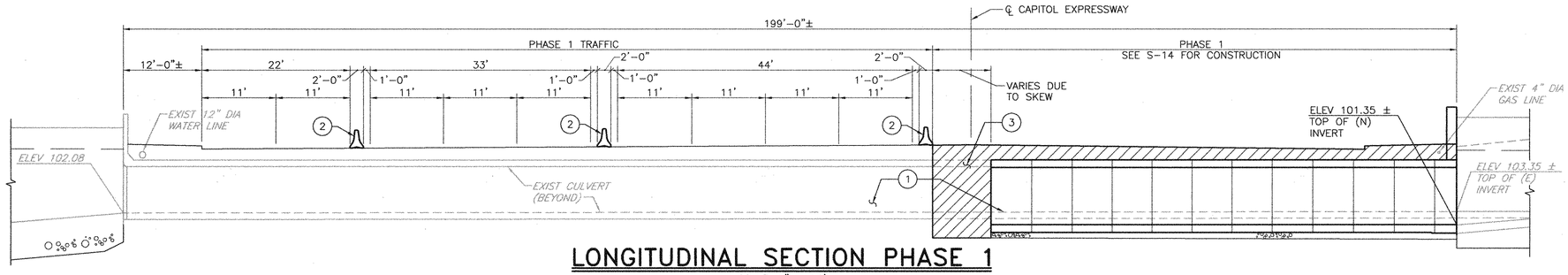

LONGITUDINAL SECTION PHASE 1

SCALE: 1" = 10'

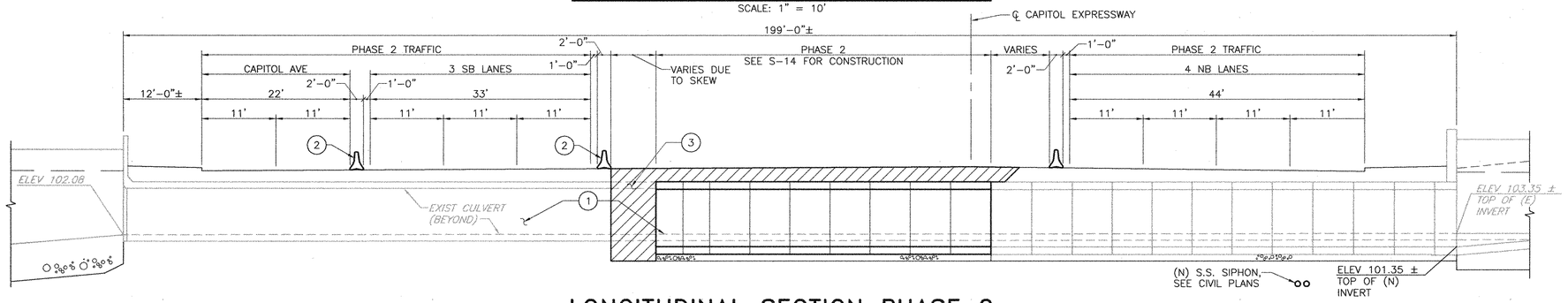

LONGITUDINAL SECTION PHASE 2

SCALE: 1" = 10'

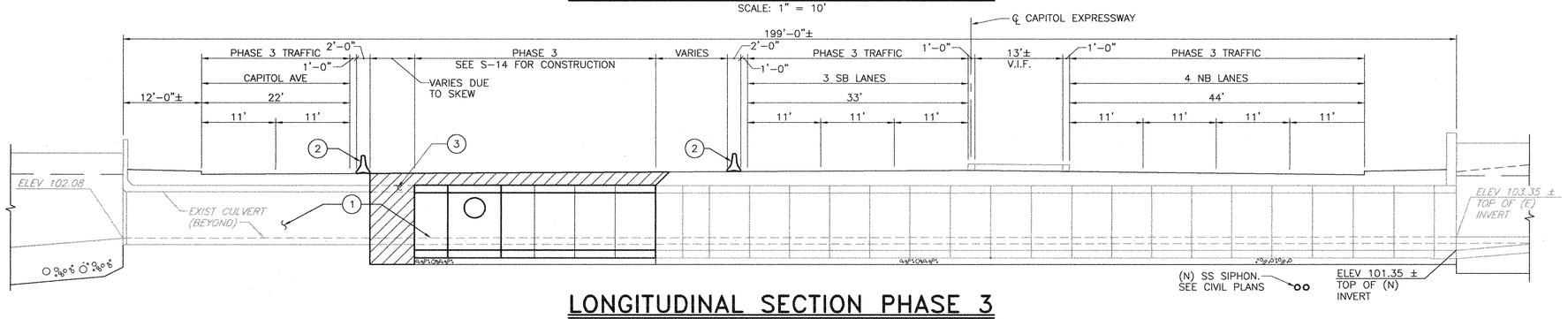

LONGITUDINAL SECTION PHASE 3

SCALE: 1" = 10'

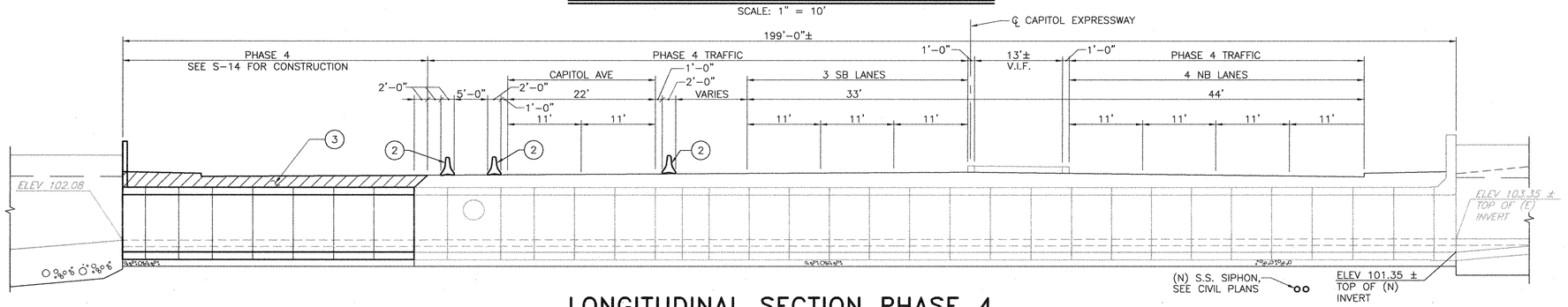

LONGITUDINAL SECTION PHASE 4

SCALE: 1" = 10'

NOTES:

1. EXISTING TRIPLE 12'X12' RCB CULVERT BEYOND TO REMAIN.
2. TEMPORARY K-RAILING DURING CONSTRUCTION SEE CIVIL PLANS FOR LAYOUT
3. TEMPORARY SHORING BY CONTRACTOR
4. FOR FINISH GRADE OF AC, TOP OF CURB, AND FLOW LINE ELEVATION, SEE CIVIL PLANS

LEGEND:

W	INDICATES EXIST 12" DIA WATER LINE
SS	INDICATES SANITARY SEWER
G	INDICATES EXIST GAS LINE
SD	INDICATES EXIST STORM DRAIN
E(OH)	INDICATES EXIST OVERHEAD ELECTRIC LINE
	INDICATES TEMPORARY SHORING BY CONTRACTOR
	INDICATES EXISTING RCB CULVERT TO BE REMOVED

REV	DESCRIPTION	DATE	APPR.	REFERENCE INFORMATION AND NOTES

BIGGS CARDOSA ASSOCIATES INC
STRUCTURAL ENGINEERS
865 The Alameda
San Jose, California 95126
408-296-5515
BCA

DATE 05-18-10
DESIGN C.V.
DRAWN S.M.H.
CHECKED A.P.N.

ENGINEERING CERTIFICATION
REGISTERED PROFESSIONAL ENGINEER VINASH M HARPER No. 2639 Exp. 12/31/10 STRUCTURAL STATE OF CALIFORNIA
PROJECT ENGINEER 5/18/10 DATE

Santa Clara Valley Water District
ACCEPTED BY DISTRICT
Dennis Cheong 6/1/10
PROJECT ENGINEER DATE

PROJECT NAME AND SHEET DESCRIPTION:
LOWER SILVER CREEK REACHES 4, 5 & 6A
TRAFFIC PHASING SECTIONS AT CAPITOL EXPRESSWAY

SCALE: AS SHOWN
VERIFY SCALES: 0 — 1"
BAR IS ONE INCH ON ORIGINAL DRAWING IF NOT ONE INCH ON THIS SHEET, ADJUST SCALES ACCORDINGLY

PROJECT NUMBER: 40264008
SHEET CODE: S-16
PAGE NUMBER: 100 OF 188

DOCUMENT NUMBER: CAD_XX-X-XXXX-XXXXX
FILENAME: W:\2001\2001093A\2001093AS16
4026-43089

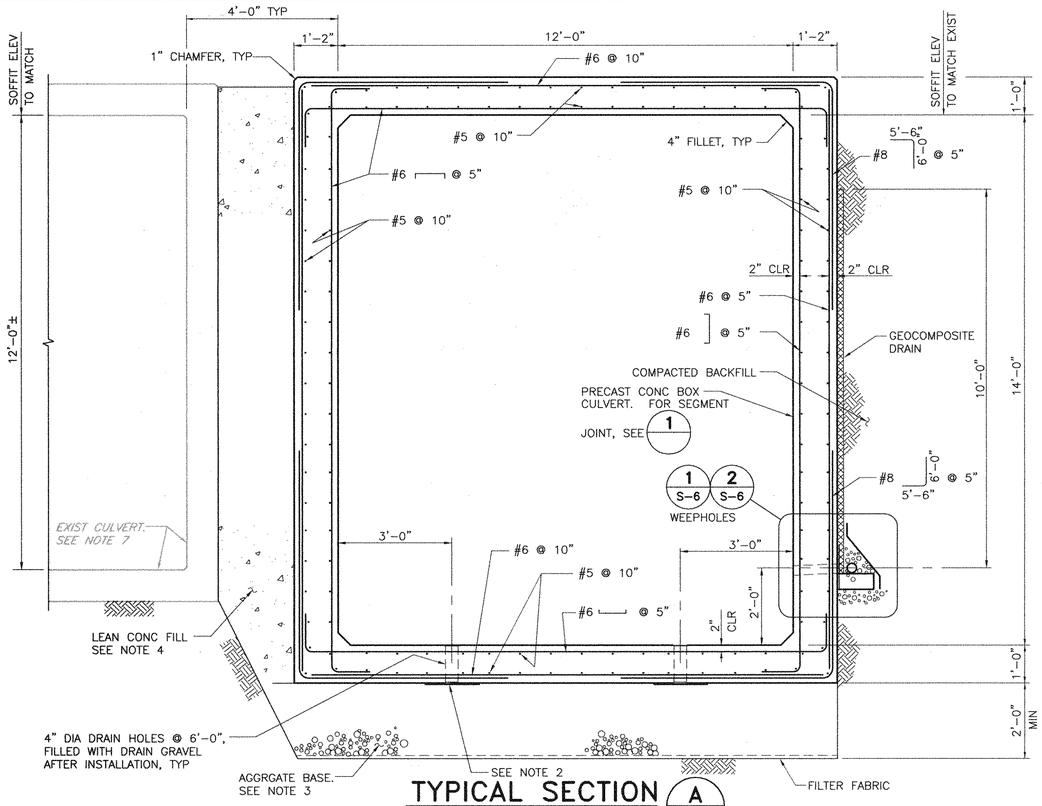

TYPICAL SECTION (A)
1/2" = 1'-0"

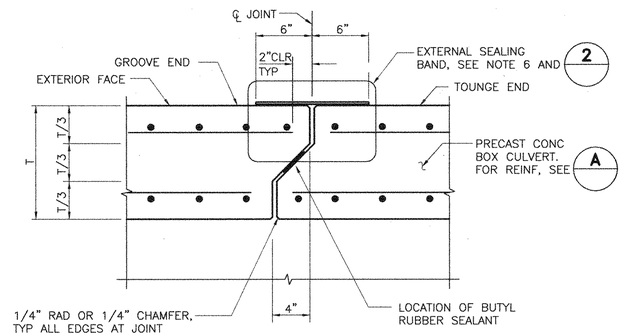

JOINT DETAIL (1)
1 1/2" = 1'-0"

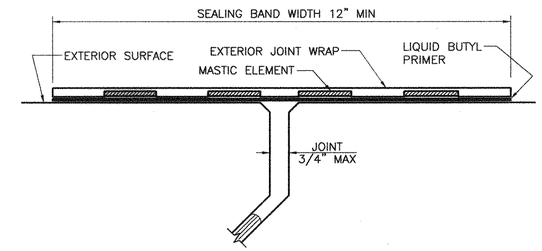

DETAIL (2)
6" = 1'-0"

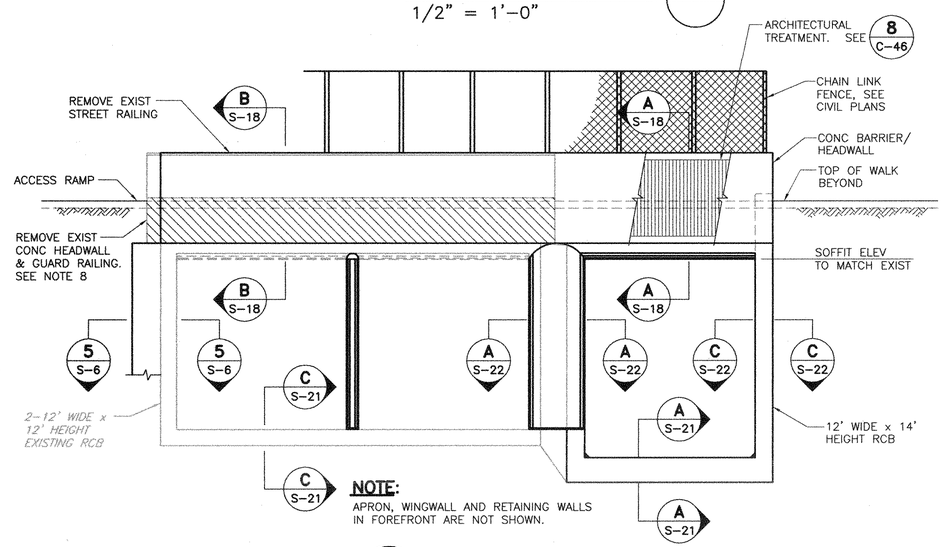

NOTE:
APRON, WINGWALL AND RETAINING WALLS IN FOREFRONT ARE NOT SHOWN.

SECTION (B) WEST END ELEVATION
3/16" = 1'-0"

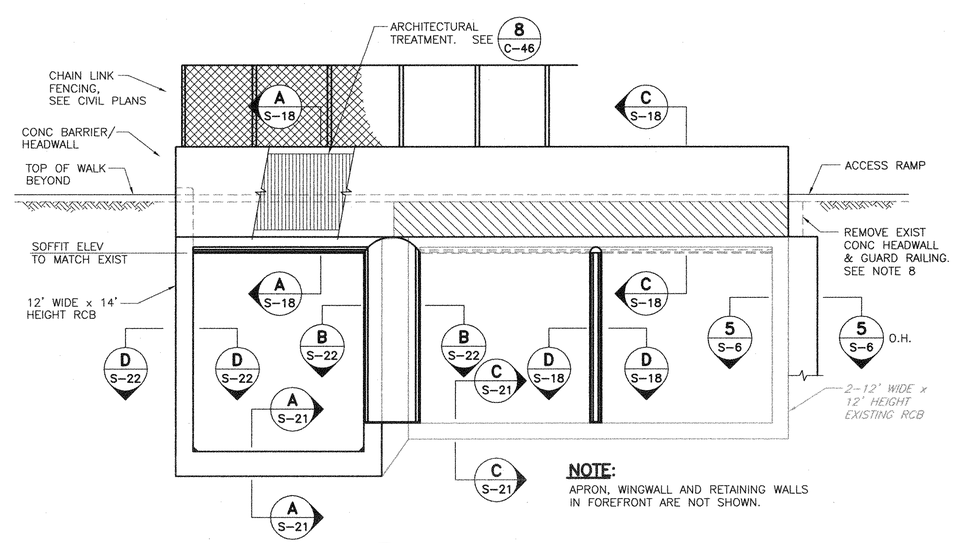

NOTE:
APRON, WINGWALL AND RETAINING WALLS IN FOREFRONT ARE NOT SHOWN.

SECTION (C) EAST END ELEVATION
3/16" = 1'-0"

NOTES

1. CONTRACTOR SHALL FIELD VERIFY ALL LAYOUTS, EXISTING CONSTRUCTION AND CONTROLLING FIELD DIMENSIONS PRIOR TO ORDERING OR FABRICATING ANY MATERIAL.
2. INSTALL 12"x12" ALUMINUM OR GALVANIZED STEEL WIRE 1/4" MESH HARDWARE CLOTH (MIN 20 GAUGE WIRE), SECURED FIRMLY TO CONCRETE, CENTERED ON THE HOLE.
3. AGGREGATE BASE SHALL BE COMPACTED AND FINISHED AT TOP TO RECEIVE PRE CAST BOX CULVERT FOR FULL BEARING.
4. LEAN CONCRETE SHALL BE f'c = 1500 PSI. CONTRACTOR SHALL SUBMIT MIX-DESIGN PRIOR TO CONSTRUCTION. CONCRETE FILL SHALL BE STARTED ONLY AFTER THE BACKFILL AND COMPACTION ON OUTER SIDE OF THE BOX CULVERT IS COMPLETED UP TO HALF THE BOX HEIGHT.
5. REINFORCEMENT SHOWN IS FOR PRECAST (PC) CONCRETE BOX CULVERT FOR 5'-0" AND 6'-0" LENGTHS. REINFORCEMENT BAR SPLICES SHALL NOT BE ALLOWED UNLESS SHOWN OR NOTED.
6. CLEAN CONC. SURFACE AND INSTALL EXTEND SEALING BAND AT VERTICAL EXTERIOR FACE & TOP OF THE PRECAST SECTIONS PRIOR TO BACKFILL. SEE SPECS FOR APPLICATION PROCESS.
7. STRUTTING/TEMPORARY SHORING SHALL BE REQUIRED. SEE SHEET S-2.
8. AT EXISTING CONCRETE HEADWALL REMOVAL, PROTECT AND SAVE EXISTING VERTICAL REINFORCING BARS FOR EMBEDMENT INTO NEW BARRIER/HEADWALL.
9. CLEAN CONCRETE AND PILE SURFACE, APPLY ONE COAT OF AGENT ON PIPE AND RCB AND GROUT SOLID WITH NON-SHRINK, NON-METALLIC GROUT.

LEGEND:

INDICATES EXTENT OF STRUCTURE REMOVAL

REV	DESCRIPTION	DATE	APPR.	REFERENCE INFORMATION AND NOTES

BIGGS CARDOSA ASSOCIATES INC
STRUCTURAL ENGINEERS
865 The Alameda
San Jose, California 95126
408-296-5515
BCA

DATE	ENGINEERING CERTIFICATION
05-18-10	REGISTERED PROFESSIONAL ENGINEER JAMES M. TAPRIA No. 2639 Exp. 12/31/10 STRUCTURAL STATE OF CALIFORNIA
DESIGN D.L.L.	
DRAWN S.M.H.	
CHECKED A.P.N.	5/18/10 PROJECT ENGINEER DATE

Santa Clara Valley Water District

ACCEPTED BY DISTRICT
Dennis Cheong 6/1/10
PROJECT ENGINEER DATE

PROJECT NAME AND SHEET DESCRIPTION:

LOWER SILVER CREEK REACHES 4, 5 & 6A

CULVERT ELEVATIONS, SECTIONS AND DETAILS AT CAPITOL EXPRESSWAY

SCALE	PROJECT NUMBER
AS SHOWN	40264008
VERIFY SCALES 0 1" BAR IS ONE INCH ON ORIGINAL DRAWING IF NOT ONE INCH ON THIS SHEET, ADJUST SCALES ACCORDINGLY	SHEET CODE: S-17
	PAGE NUMBER: 101 OF 188

DOCUMENT NUMBER: CAD_XX-X-XXXX-XXXXX
FILENAME: W:\2001\2001093A\2001093AS17
40264-43090

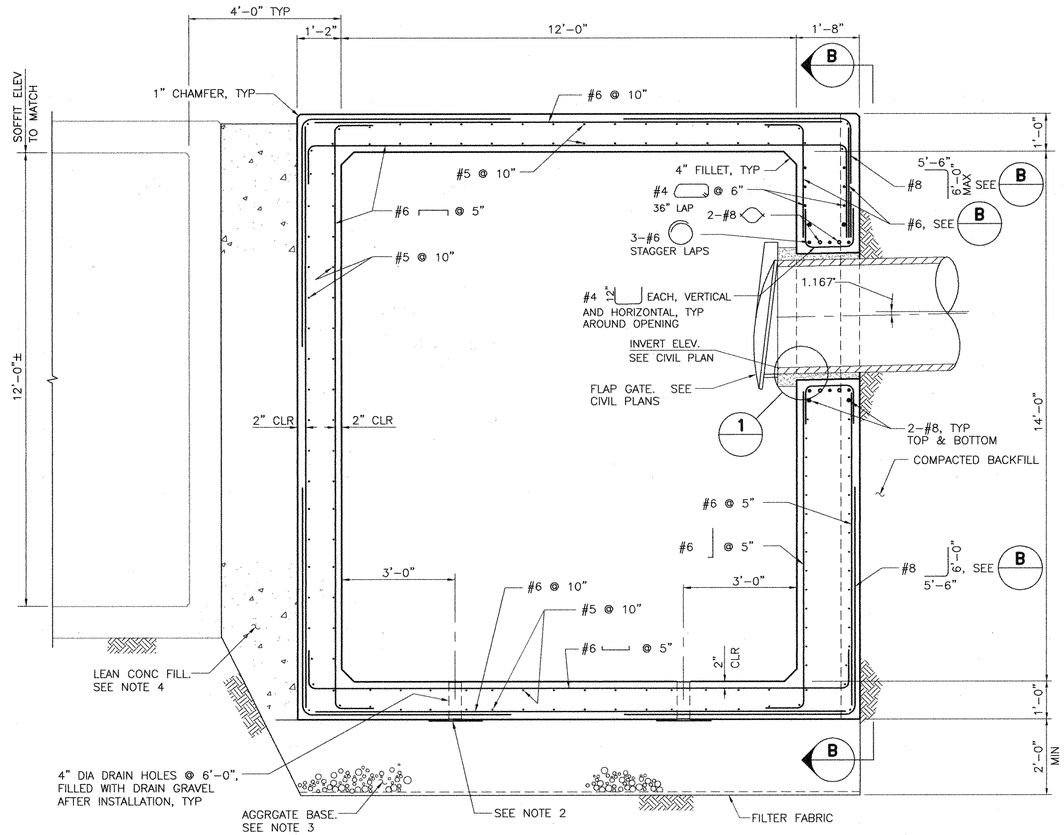

NOTE:
FOR DETAILS NOT SHOWN OR NOTED, SEE S-17

TYPICAL SECTION (A)
1/2" = 1'-0"

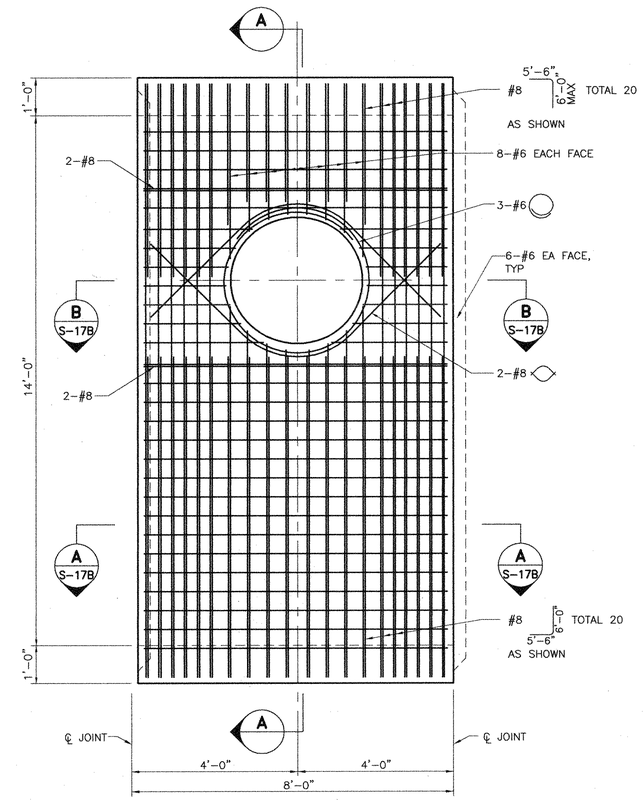

TYPICAL SECTION (B)
1/2" = 1'-0"

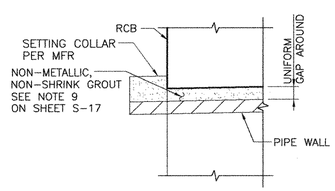

DETAIL (1)
1" = 1'-0"

REV	DESCRIPTION	DATE	APPR.	REFERENCE INFORMATION AND NOTES

BIGGS CARDOSA ASSOCIATES INC
STRUCTURAL ENGINEERS
865 The Alameda
San Jose, California 95126
408-296-5515
BCA

DATE	05-18-10
DESIGN	D.L.L.
DRAWN	S.M.H.
CHECKED	A.P.N.

ENGINEERING CERTIFICATION
REGISTERED PROFESSIONAL ENGINEER AKASH M HATHEKER No. 2639 Exp. 12/31/10 STRUCTURAL STATE OF CALIFORNIA
PROJECT ENGINEER — DATE 5/18/10

Santa Clara Valley Water District
ACCEPTED BY DISTRICT
Dennis Cheong 6/1/10
PROJECT ENGINEER — DATE

PROJECT NAME AND SHEET DESCRIPTION:
LOWER SILVER CREEK REACHES 4, 5 & 6A
CULVERT ELEVATIONS, SECTIONS AND DETAILS AT CAPITOL EXPRESSWAY

SCALE: AS SHOWN
VERIFY SCALES: 0 — 1"
BAR IS ONE INCH ON ORIGINAL DRAWING IF NOT ONE INCH ON THIS SHEET, ADJUST SCALES ACCORDINGLY

PROJECT NUMBER: 40264008
SHEET CODE: S-17A
PAGE NUMBER: 101A OF 188

DOCUMENT NUMBER: CAD_XX-X-XXXX-XXXXX
FILENAME: W:\2001\2001093A\2001093AS17A
4026 - 4309

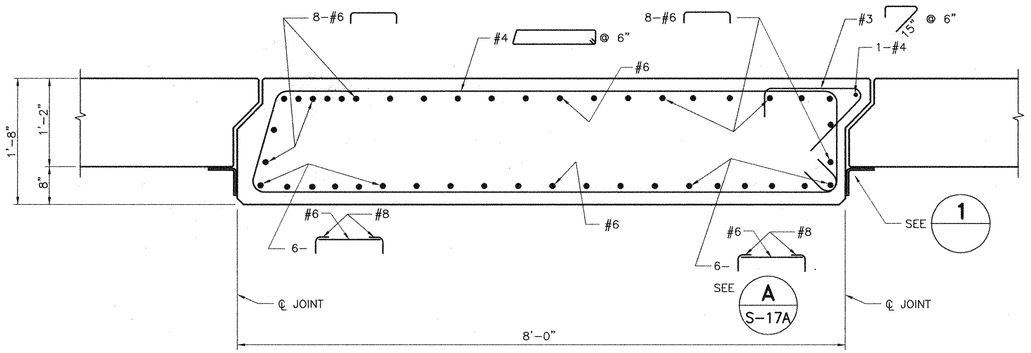

SECTION A
1" = 1'-0"

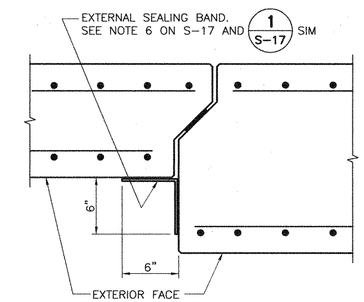

JOINT DETAIL 1
1 1/2" = 1'-0"

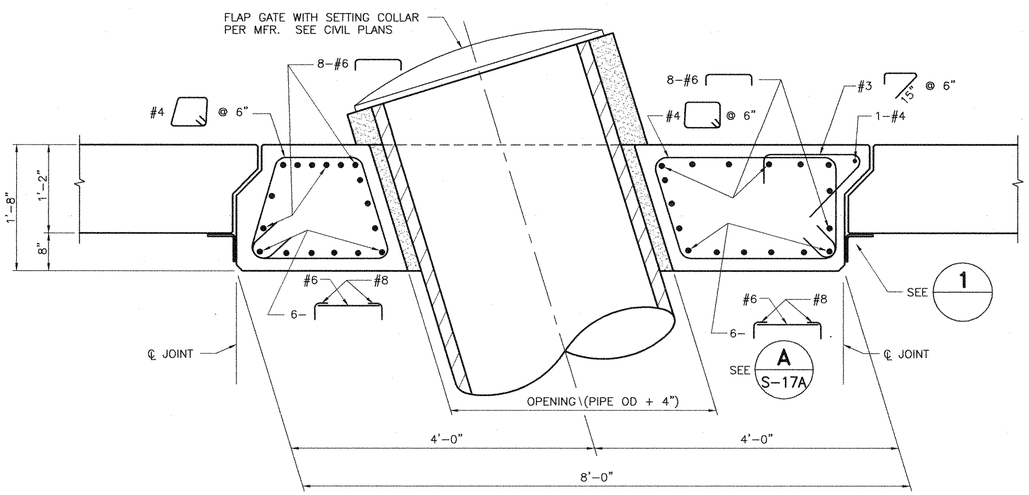

SECTION B
1" = 1'-0"

REV	DESCRIPTION	DATE	APPR.	REFERENCE INFORMATION AND NOTES

BIGGS CARDOSA ASSOCIATES INC
STRUCTURAL ENGINEERS
865 The Alameda
San Jose, California 95126
408-296-5515
BCA

DATE	ENGINEERING CERTIFICATION
05-18-10	REGISTERED PROFESSIONAL ENGINEER — ASWASH M. HATRAMSKY — No. 2639 — Exp. 12/31/10 — STRUCTURAL — STATE OF CALIFORNIA
DESIGN D.L.L.	
DRAWN J.J.D.	
CHECKED A.P.N.	5/18/10 PROJECT ENGINEER DATE

Santa Clara Valley Water District

ACCEPTED BY DISTRICT
Dennis Cheong 6/1/10
PROJECT ENGINEER DATE

PROJECT NAME AND SHEET DESCRIPTION:
LOWER SILVER CREEK REACHES 4, 5 & 6A
CULVERT SECTIONS AND DETAILS AT CAPITOL EXPRESSWAY

SCALE: AS SHOWN
VERIFY SCALES: 0 1"
BAR IS ONE INCH ON ORIGINAL DRAWING IF NOT ONE INCH ON THIS SHEET, ADJUST SCALES ACCORDINGLY

PROJECT NUMBER: 40264008
SHEET CODE: S-17B
PAGE NUMBER: 101B OF 188

DOCUMENT NUMBER: CAD_XX-X-XXXX-XXXXX
FILENAME: W:\2001\2001093A\2001093AS17B
4026 - 43092

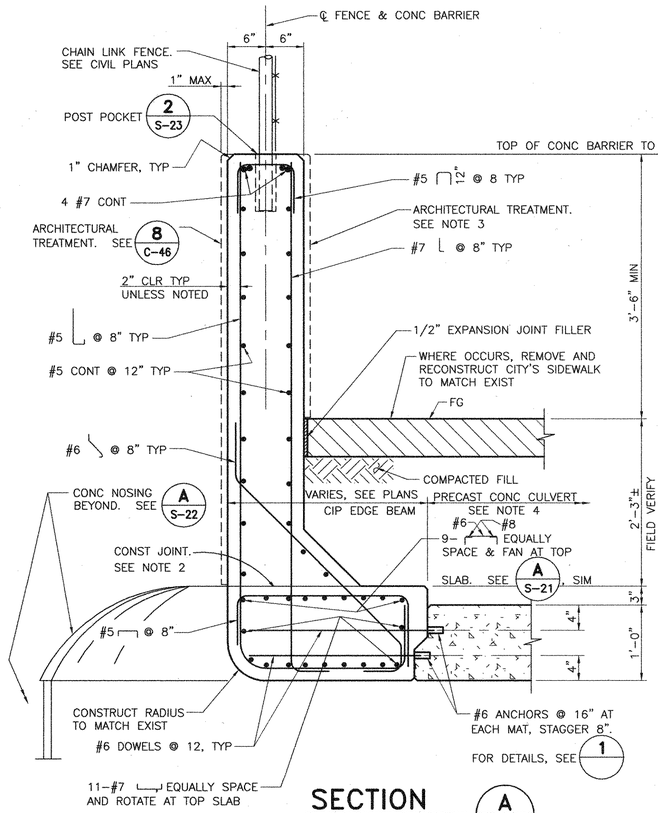

SECTION A
1" = 1'-0"

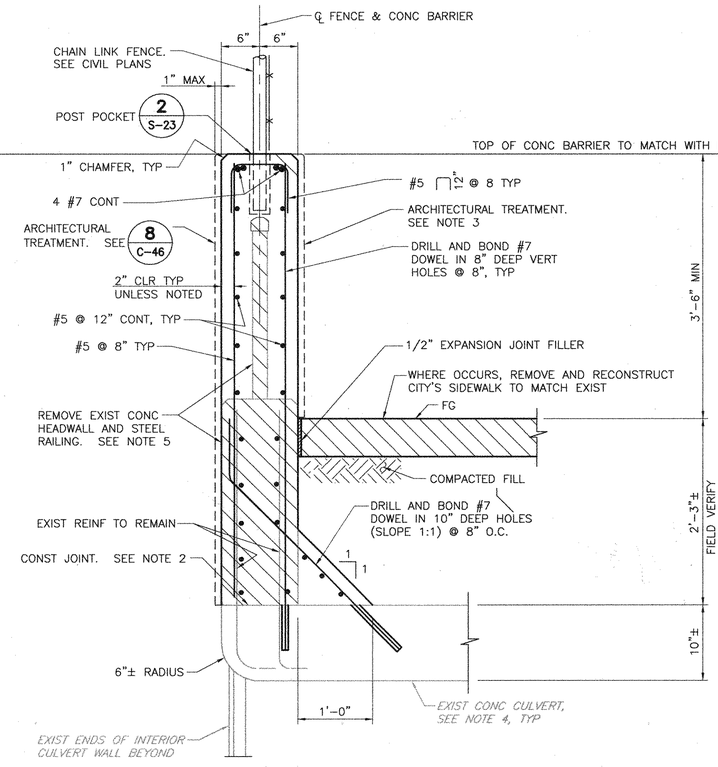

SECTION B
1" = 1'-0"

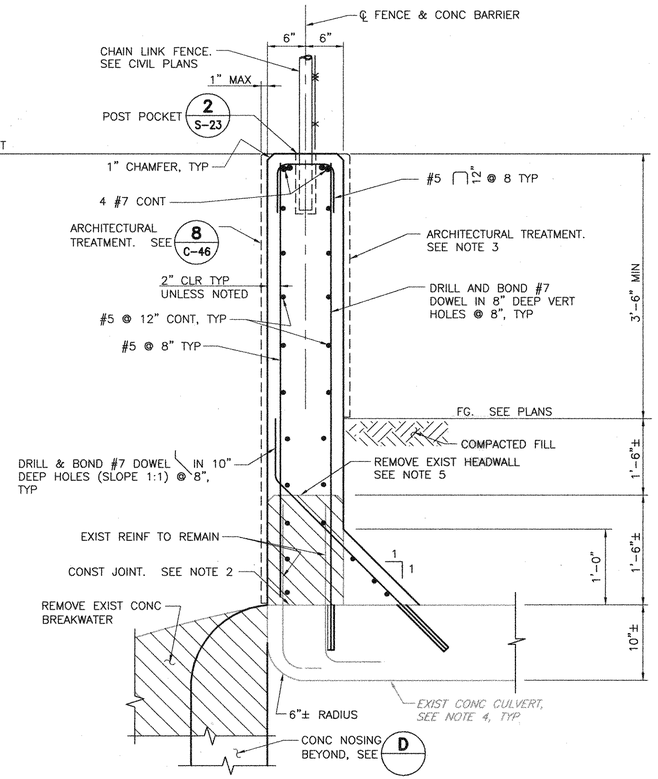

SECTION C
1" = 1'-0"

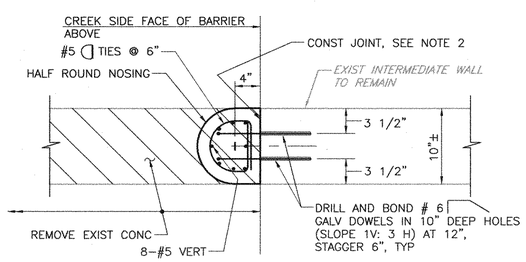

SECTION D
NO SCALE

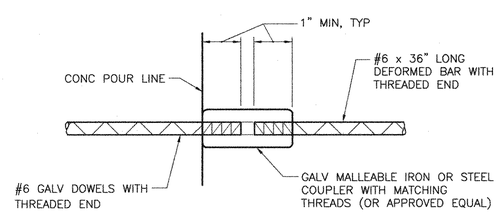

DETAIL 1 ANCHORAGE
NO SCALE

NOTES:

1. CONTRACTOR SHALL VERIFY ALL CONTROLLING FIELD DIMENSIONS BEFORE ORDERING OR FABRICATING ANY MATERIAL.
2. ROUGHEN ENTIRE CONCRETE SURFACE TO 1/4" AMPLITUDE AT ALL CONSTRUCTION JOINTS, AND CLEAN PRIOR TO NEW CONCRETE POUR, UNLESS NOTED OTHERWISE.
3. CONTRACTOR SHALL COORDINATE WITH THE 'CITY OF SAN JOSE PUBLIC WORKS' FOR ARCHITECTURAL TREATMENT AT NEW CONCRETE BARRIERS AND SUBMIT SHOP DRAWINGS TO THE ENGINEER FOR REVIEW PRIOR TO CONSTRUCTION.
4. TEMOPORARY STRUTTING SHALL BE REQUIRED AT EXISTING AND NEW CULVERT CONSTRUCTION PER CALTRAN'S STANDARD PLAN D88, UNLES NOTED OTHERWISE.
5. EXIST REINFORCEMENT AT HEADWALL REMOVAL SHALL BE SAVED WITHOUT DAMAGE FOR EMBEDDING THEM INTO NEW CONCRETE.

REV	DESCRIPTION	DATE	APPR.	REFERENCE INFORMATION AND NOTES

BIGGS CARDOSA ASSOCIATES INC
STRUCTURAL ENGINEERS
865 The Alameda
San Jose, California 95126
408-296-5515
BCA

DATE	05-18-10
DESIGN	D.L.L.
DRAWN	S.M.H.
CHECKED	A.P.N.

ENGINEERING CERTIFICATION
REGISTERED PROFESSIONAL ENGINEER MICHAEL M. HALDAS No. 2639 Exp. 12/31/10 STRUCTURAL STATE OF CALIFORNIA
PROJECT ENGINEER — DATE 5/18/10

Santa Clara Valley Water District
ACCEPTED BY DISTRICT
Dennis Cheung 6/1/10
PROJECT ENGINEER — DATE

PROJECT NAME AND SHEET DESCRIPTION:
LOWER SILVER CREEK REACHES 4, 5 & 6A
CULVERT SECTIONS AND DETAILS AT CAPITOL EXPRESSWAY

SCALE: AS SHOWN
VERIFY SCALES: 0 — 1"
BAR IS ONE INCH ON ORIGINAL DRAWING IF NOT ONE INCH ON THIS SHEET, ADJUST SCALES ACCORDINGLY

PROJECT NUMBER: 40264008
SHEET CODE: S-18
PAGE NUMBER: 102 OF 188

DOCUMENT NUMBER: CAD_XX-X-XXXX-XXXXX
FILENAME: W:\2001\2001093A\2001093AS18
4026 - 43093

NOTES:

1. CONTRACTOR SHALL FIELD VERIFY ALL LAYOUTS, EXISTING CONSTRUCTION AND CONTROLLING FIELD DIMENSIONS PRIOR TO ORDERING OR FABRICATING ANY MATERIAL.
2. FOR TOP OF WALL (TW) AND INVERT ELEVATIONS AT APRON SLAB, SEE 'CIVIL PLANS'.
3. ROUGHEN ENTIRE CONCRETE SURFACE TO 1/4" AMPLITUDE AND CLEAN PRIOR TO NEW CONCRETE POUR.
4. FOR LOCATIONS OF CONCRETE INVERT WEEP HOLES AT TEN (10) FEET MAXIMUM SPACINGS, SEE APRON PLANS. THE WEEP HOLES COULD BE STRADDLED HORIZONTALLY TO CLEAR REINFORCING BARS BY MINIMUM 2".

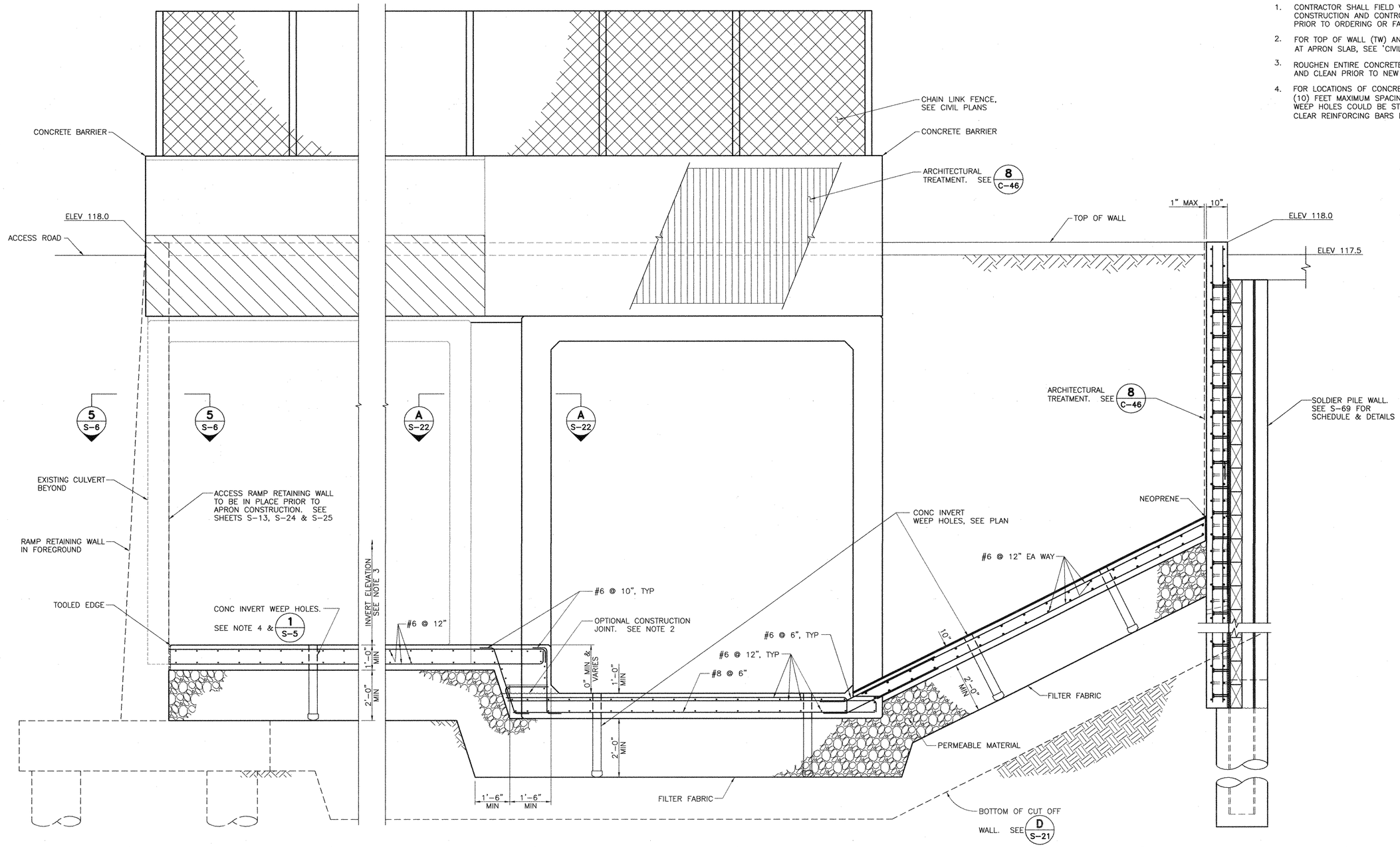

SECTION A TYPICAL AT APRON
1/2" = 1'-0"

REV	DESCRIPTION	DATE	APPR.	REFERENCE INFORMATION AND NOTES

BIGGS CARDOSA ASSOCIATES INC
STRUCTURAL ENGINEERS
865 The Alameda
San Jose, California 95126
408-296-5515
BCA

DATE	05-18-10
DESIGN	D.L.L.
DRAWN	S.M.H.
CHECKED	A.P.N.

ENGINEERING CERTIFICATION
REGISTERED PROFESSIONAL ENGINEER SOHRAB M. HAFEZI No. 2639 Exp. 12/31/10 STRUCTURAL STATE OF CALIFORNIA
PROJECT ENGINEER 5/18/10 DATE

Santa Clara Valley Water District
ACCEPTED BY DISTRICT
Dennis Cheong 6/1/10
PROJECT ENGINEER DATE

PROJECT NAME AND SHEET DESCRIPTION:
LOWER SILVER CREEK REACHES 4, 5 & 6A
APRON SECTION AND DETAILS (WEST) AT CAPITOL EXPRESSWAY

SCALE: AS SHOWN
VERIFY SCALES: 0 1" BAR IS ONE INCH ON ORIGINAL DRAWING IF NOT ONE INCH ON THIS SHEET, ADJUST SCALES ACCORDINGLY
PROJECT NUMBER: 40264008
SHEET CODE: S-19
PAGE NUMBER: 103 OF 188

DOCUMENT NUMBER: CAD_XX-X-XXXX-XXXXX
FILENAME: W:\2001\2001093A\2001093AS19
4026 - 93094

NOTES:

1. CONTRACTOR SHALL FIELD VERIFY ALL LAYOUTS, EXISTING CONSTRUCTION AND CONTROLLING FIELD DIMENSIONS PRIOR TO ORDERING OR FABRICATING ANY MATERIAL.
2. FOR TOP OF WALL (TOW) AND INVERT ELEVATIONS AT APRON SLAB, SEE 'CIVIL PLANS'.
3. ROUGHEN ENTIRE CONCRETE SURFACE TO 1/2" AMPLITUDE AND CLEAN PRIOR TO NEW CONCRETE POUR.
4. FOR LOCATIONS OF CONCRETE INVERT WEEP HOLES AT TEN (10) FEET MAXIMUM SPACINGS, SEE APRON PLANS. THE WEEP HOLES COULD BE STRADDLED HORIZONTALLY TO CLEAR REINFORCING BARS BY MINIMUM 2".

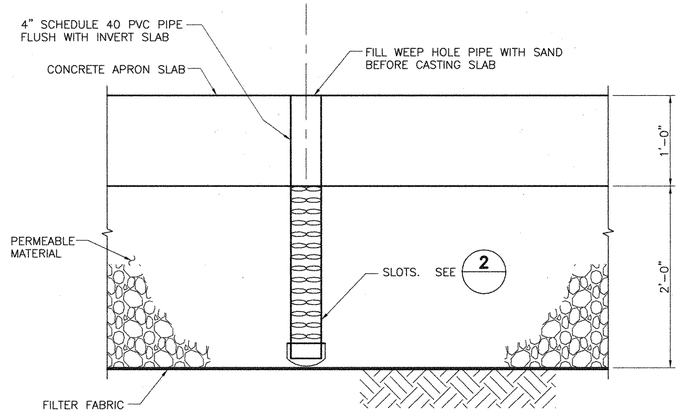

DETAIL 1 CONCRETE INVERT WEEP HOLE
NO SCALE

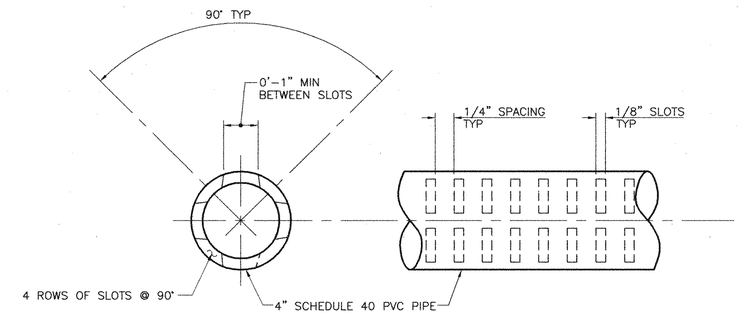

DETAIL 2 PVC DRAIN PIPE SLOTS
NO SCALE

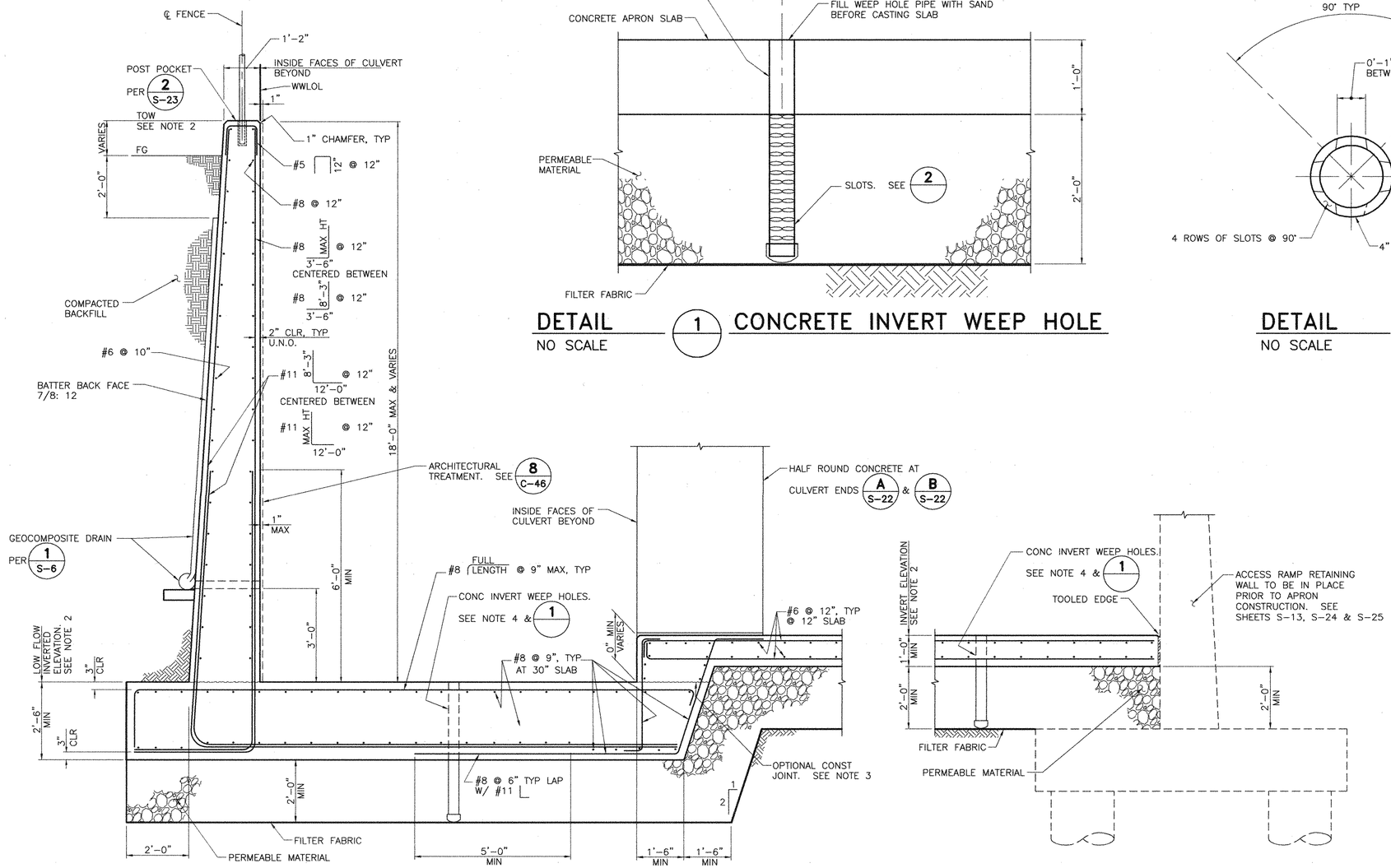

TYPICAL SECTION A AT L-WALL APRON
1/2" = 1'-0"

REV	DESCRIPTION	DATE	APPR.	REFERENCE INFORMATION AND NOTES

BIGGS CARDOSA ASSOCIATES INC
STRUCTURAL ENGINEERS
865 The Alameda
San Jose, California 95126
408-296-5515
BCA

DATE	
05-18-10	
DESIGN	R.G.S.
DRAWN	S.M.H.
CHECKED	A.P.N.

ENGINEERING CERTIFICATION
REGISTERED PROFESSIONAL ENGINEER ROBERT M. HARDER No. 2639 Exp. 12/31/10 STRUCTURAL STATE OF CALIFORNIA
PROJECT ENGINEER 5/18/10 DATE

Santa Clara Valley Water District
ACCEPTED BY DISTRICT
Dennis Cheong 6/1/10
PROJECT ENGINEER DATE

PROJECT NAME AND SHEET DESCRIPTION:
LOWER SILVER CREEK REACHES 4, 5 & 6A
L-WALL APRON SECTION AND DETAILS (EAST) AT CAPITOL EXPRESSWAY

SCALE: AS SHOWN
VERIFY SCALES: 0 — 1"
BAR IS ONE INCH ON ORIGINAL DRAWING IF NOT ONE INCH ON THIS SHEET, ADJUST SCALES ACCORDINGLY

PROJECT NUMBER: 40264008
SHEET CODE: S-20
PAGE NUMBER: 104 OF 188

DOCUMENT NUMBER: CAD_XX-X-XXXX-XXXXX
FILENAME: W:\2001\2001093A\2001093AS20
4026 - 93095

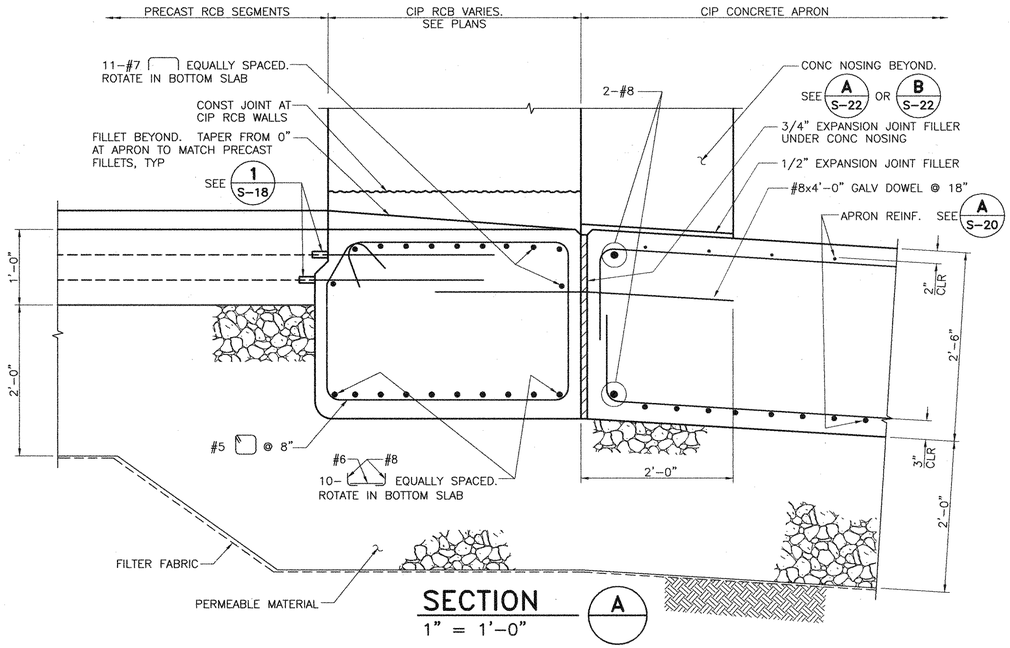

SECTION A
1" = 1'–0"

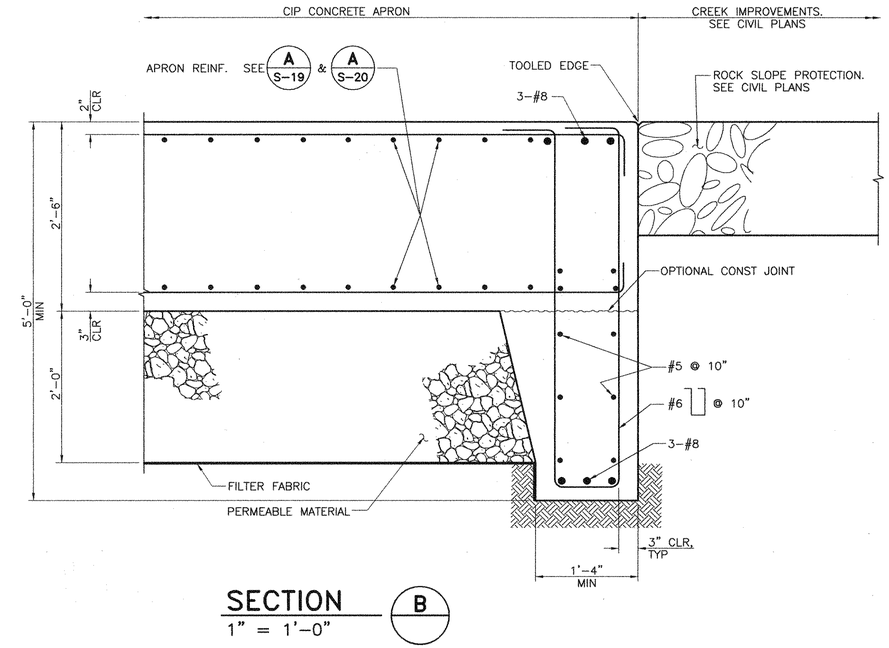

SECTION B
1" = 1'–0"

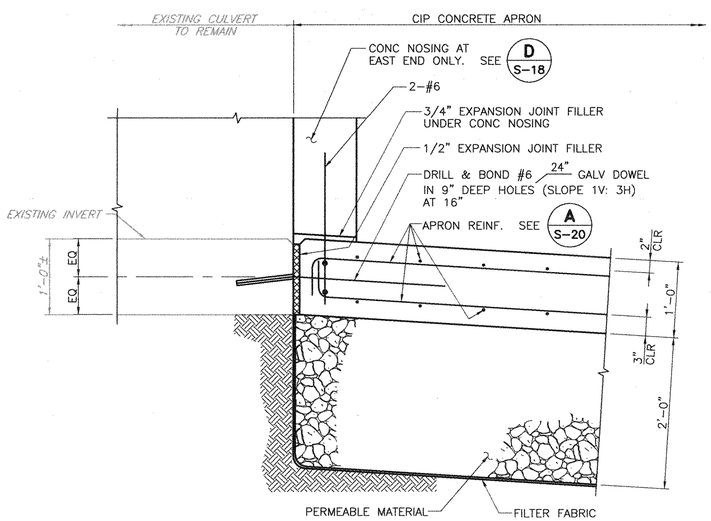

SECTION C
1" = 1'–0"

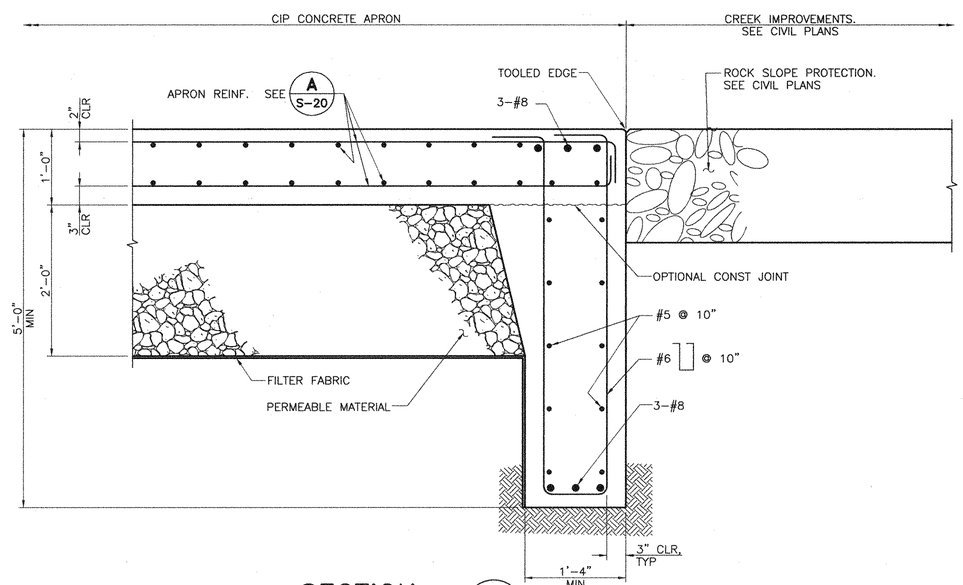

SECTION D
1" = 1'–0"

REV	DESCRIPTION	DATE	APPR.	REFERENCE INFORMATION AND NOTES

BIGGS CARDOSA ASSOCIATES INC
STRUCTURAL ENGINEERS
865 The Alameda
San Jose, California 95126
408–296–5515
BCA

DATE	
05–18–10	
DESIGN	D.L.L.
DRAWN	S.M.H.
CHECKED	A.P.N.

ENGINEERING CERTIFICATION
REGISTERED PROFESSIONAL ENGINEER JAMES M. HARRIS No. 2639 Exp. 12/31/10 STRUCTURAL STATE OF CALIFORNIA
5/18/10
PROJECT ENGINEER DATE

Santa Clara Valley Water District
ACCEPTED BY DISTRICT
Dennis Cheong 6/1/10
PROJECT ENGINEER DATE

PROJECT NAME AND SHEET DESCRIPTION:
LOWER SILVER CREEK REACHES 4, 5 & 6A
APRON SECTIONS AT CAPITOL EXPRESSWAY

SCALE: AS SHOWN
VERIFY SCALES 0 1"
BAR IS ONE INCH ON ORIGINAL DRAWING IF NOT ONE INCH ON THIS SHEET, ADJUST SCALES ACCORDINGLY

PROJECT NUMBER: 40264008
SHEET CODE: S–21
PAGE NUMBER: 105 OF 188

DOCUMENT NUMBER: CAD_XX–X–XXXX–XXXXX
Y026 - Y3096
FILENAME: W:\2001\2001093A\2001093AS21

NOTES

1. CONTRACTOR SHALL VERIFY ALL CONTROLLING FIELD DIMENSIONS BEFORE ORDERING OR FABRICATING ANY MATERIAL.
2. ROUGHEN ENTIRE CONCRETE SURFACE TO 1/4" AMPLITUDE AT ALL CONSTRUCTION JOINTS AND CLEAN PRIOR TO NEW CONCRETE POUR, UNLESS NOTED OTHERWISE.

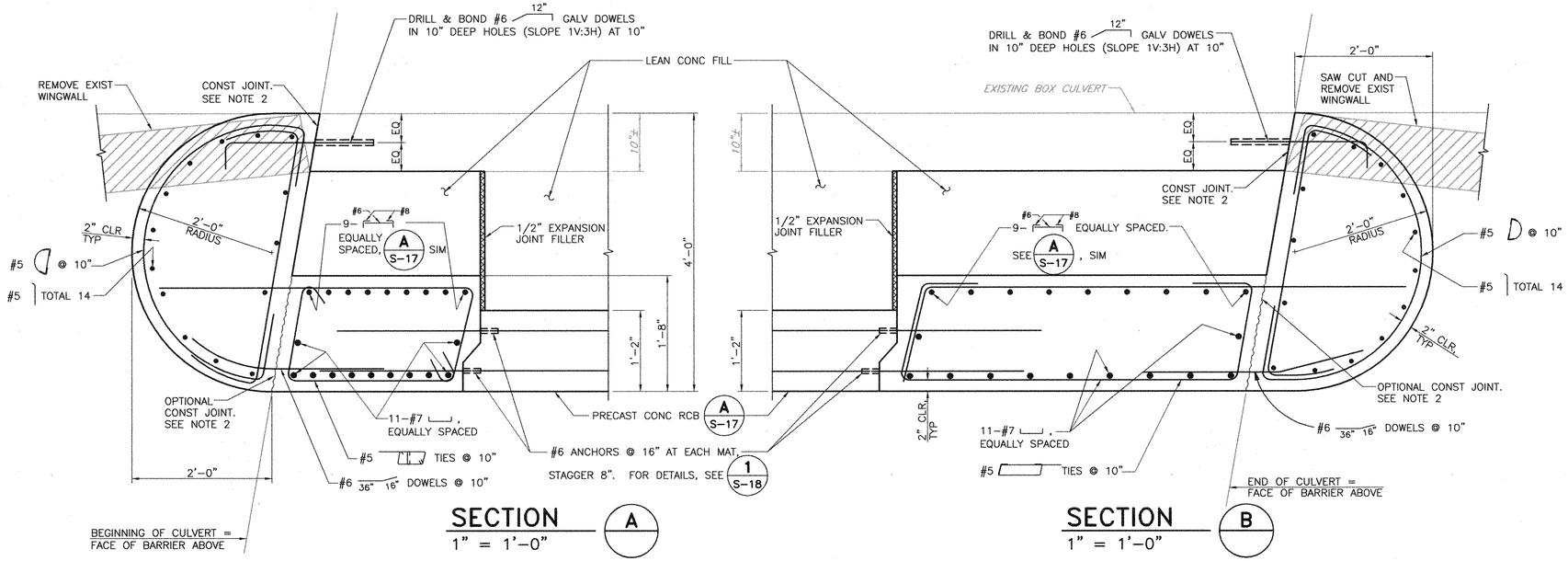

SECTION A
1" = 1'-0"

SECTION B
1" = 1'-0"

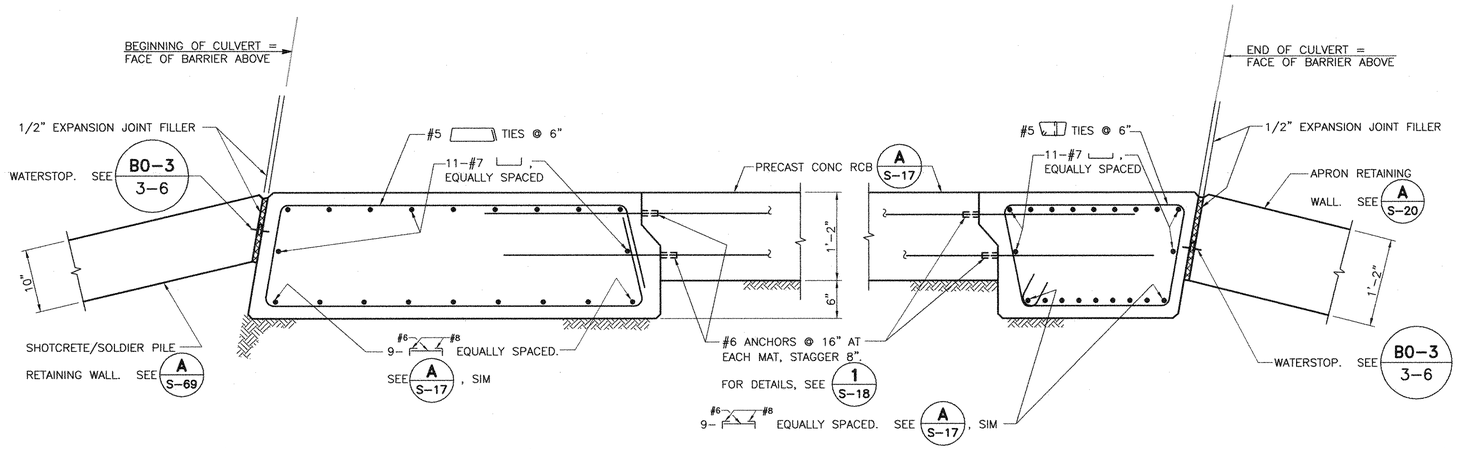

SECTION C
1" = 1'-0"

SECTION D
1" = 1'-0"

REV	DESCRIPTION	DATE	APPR.	REFERENCE INFORMATION AND NOTES

BIGGS CARDOSA ASSOCIATES INC
STRUCTURAL ENGINEERS
865 The Alameda
San Jose, California 95126
408-296-5515
BCA

DATE 05-18-10
DESIGN D.L.L.
DRAWN S.M.H.
CHECKED A.P.N.

ENGINEERING CERTIFICATION
REGISTERED PROFESSIONAL ENGINEER MARVIN H. HATTER No. 2639 Exp. 12/31/10 STRUCTURAL STATE OF CALIFORNIA
PROJECT ENGINEER 5/18/10 DATE

Santa Clara Valley Water District
ACCEPTED BY DISTRICT
Dennis Chiang 6/1/10
PROJECT ENGINEER DATE

PROJECT NAME AND SHEET DESCRIPTION:
LOWER SILVER CREEK REACHES 4, 5 & 6A
CULVERT SECTIONS AT CAPITOL EXPRESSWAY

SCALE: AS SHOWN
VERIFY SCALES 0 1"
BAR IS ONE INCH ON ORIGINAL DRAWING IF NOT ONE INCH ON THIS SHEET, ADJUST SCALES ACCORDINGLY

PROJECT NUMBER: 40264008
SHEET CODE: S-22
PAGE NUMBER: 106 OF 188

DOCUMENT NUMBER: CAD_XX-X-XXXX-XXXXX
FILENAME: W:\2001\2001093A\2001093AS22
Y026 - Y3097

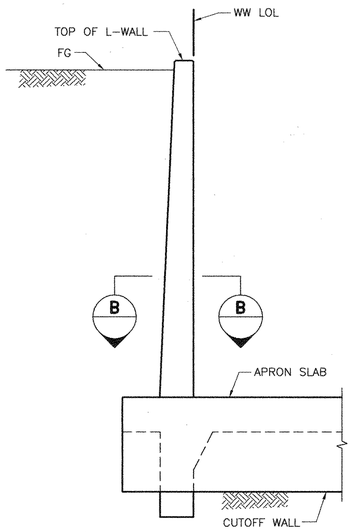

SECTION A
1/4" = 1'-0"

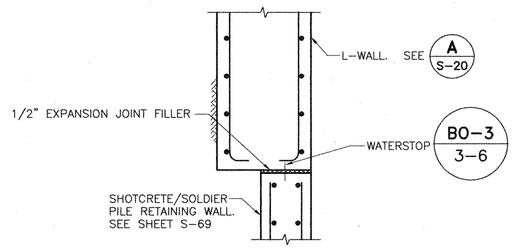

SECTION B
1" = 1'-0"

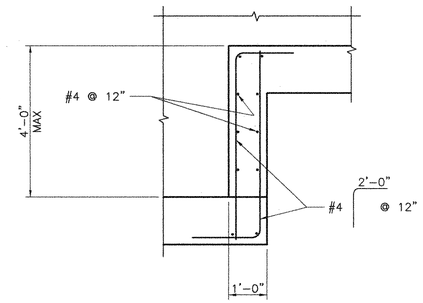

DETAIL 1 FOOTING STEP
NO SCALE

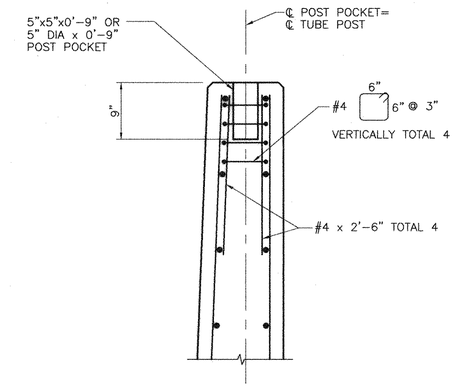

DETAIL 2 POST POCKET
1" = 1'-0"

REV	DESCRIPTION	DATE	APPR.	REFERENCE INFORMATION AND NOTES

BIGGS CARDOSA ASSOCIATES INC
STRUCTURAL ENGINEERS
865 The Alameda
San Jose, California 95126
408-296-5515
BCA

DATE 05-18-10
DESIGN D.L.L.
DRAWN S.M.H.
CHECKED A.P.N.

ENGINEERING CERTIFICATION
REGISTERED PROFESSIONAL ENGINEER SHIVASH M HAYRE No. 2639 Exp. 12/31/10 STRUCTURAL STATE OF CALIFORNIA
PROJECT ENGINEER 5/19/10 DATE

Santa Clara Valley Water District
ACCEPTED BY DISTRICT
Dennis Cheung 6/1/10
PROJECT ENGINEER DATE

PROJECT NAME AND SHEET DESCRIPTION:
LOWER SILVER CREEK REACHES 4, 5 & 6A
CULVERT APRON SECTIONS & DETAILS

SCALE: AS SHOWN
VERIFY SCALES: 0 1"
BAR IS ONE INCH ON ORIGINAL DRAWING. IF NOT ONE INCH ON THIS SHEET, ADJUST SCALES ACCORDINGLY

PROJECT NUMBER: 40264008
SHEET CODE: S-23
PAGE NUMBER: 107 OF 188

DOCUMENT NUMBER: CAD_XX-X-XXXX-XXXXX
FILENAME: W:\2001\2001093A\2001093AS23
4026 - Y3098

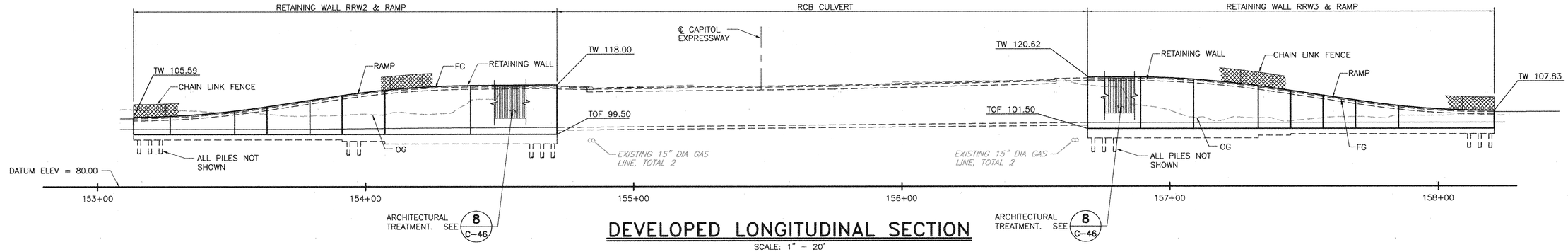

DEVELOPED LONGITUDINAL SECTION

SCALE: 1" = 20'

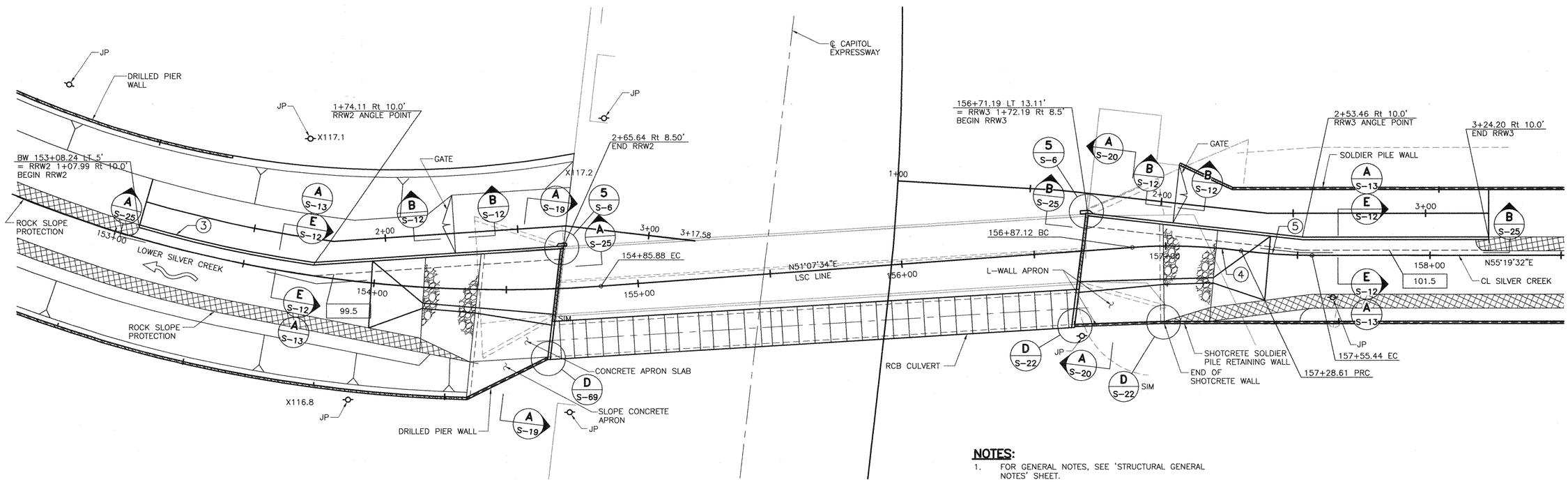

PLAN

SCALE: 1" = 20'

CURVE DATA TABLE			
	3	4	5
R	499.97'	200.00'	200.00'
△	28°05'07"	12°00'36"	7°48'38"
L	245.08'	41.92'	27.26'

NOTES:

1. FOR GENERAL NOTES, SEE 'STRUCTURAL GENERAL NOTES' SHEET.
2. X117.2 INDICATES EXISTING GROUND SPOT ELEVATION.
3. FOR RAMP CONTROL LINE, SEE CIVIL PLANS.

LEGEND:

G — INDICATES EXISTING GAS LINE

E(OH) — INDICATES EXISTING OVERHEAD ELECTRIC LINE

INDICATES EXISTING RCB CULVERT. SEE CIVIL PLANS

104.5 — INDICATES TOP OF FOOTING ELEVATION

REV	DESCRIPTION	DATE	APPR.	REFERENCE INFORMATION AND NOTES

BIGGS CARDOSA ASSOCIATES INC
STRUCTURAL ENGINEERS
865 The Alameda
San Jose, California 95126
408-296-5515
BCA

DATE 05-18-10
DESIGN D.L.L.
DRAWN S.M.H.
CHECKED A.P.N.

ENGINEERING CERTIFICATION
REGISTERED PROFESSIONAL ENGINEER — ARVINDSH M. NARANG — No. 2639 — Exp. 12/31/10 — STRUCTURAL — STATE OF CALIFORNIA
PROJECT ENGINEER 5/18/10 DATE

Santa Clara Valley Water District
ACCEPTED BY DISTRICT
Dennis Cheong 6/11/10
PROJECT ENGINEER DATE

PROJECT NAME AND SHEET DESCRIPTION:

LOWER SILVER CREEK REACHES 4, 5 & 6A

CULVERT APRON AND RAMP PLAN & SECTION AT CAPITOL EXPRESSWAY

SCALE: AS SHOWN
VERIFY SCALES: 0 — 1" BAR IS ONE INCH ON ORIGINAL DRAWING IF NOT ONE INCH ON THIS SHEET, ADJUST SCALES ACCORDINGLY

PROJECT NUMBER: 40264008
SHEET CODE: S-24
PAGE NUMBER: 108 OF 188

DOCUMENT NUMBER: CAD_XX-X-XXXX-XXXXX
FILENAME: W:\2001\2001093A\20010934S24
Y026 - 43099

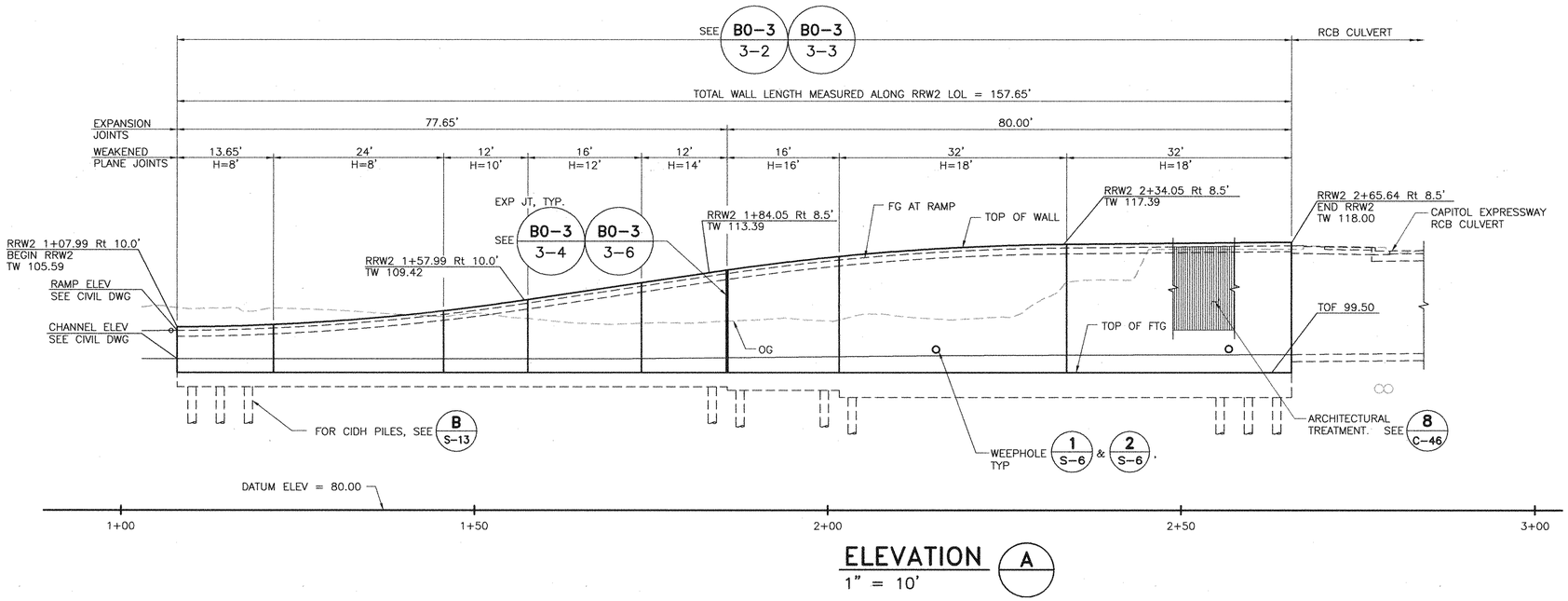

ELEVATION A
1" = 10'

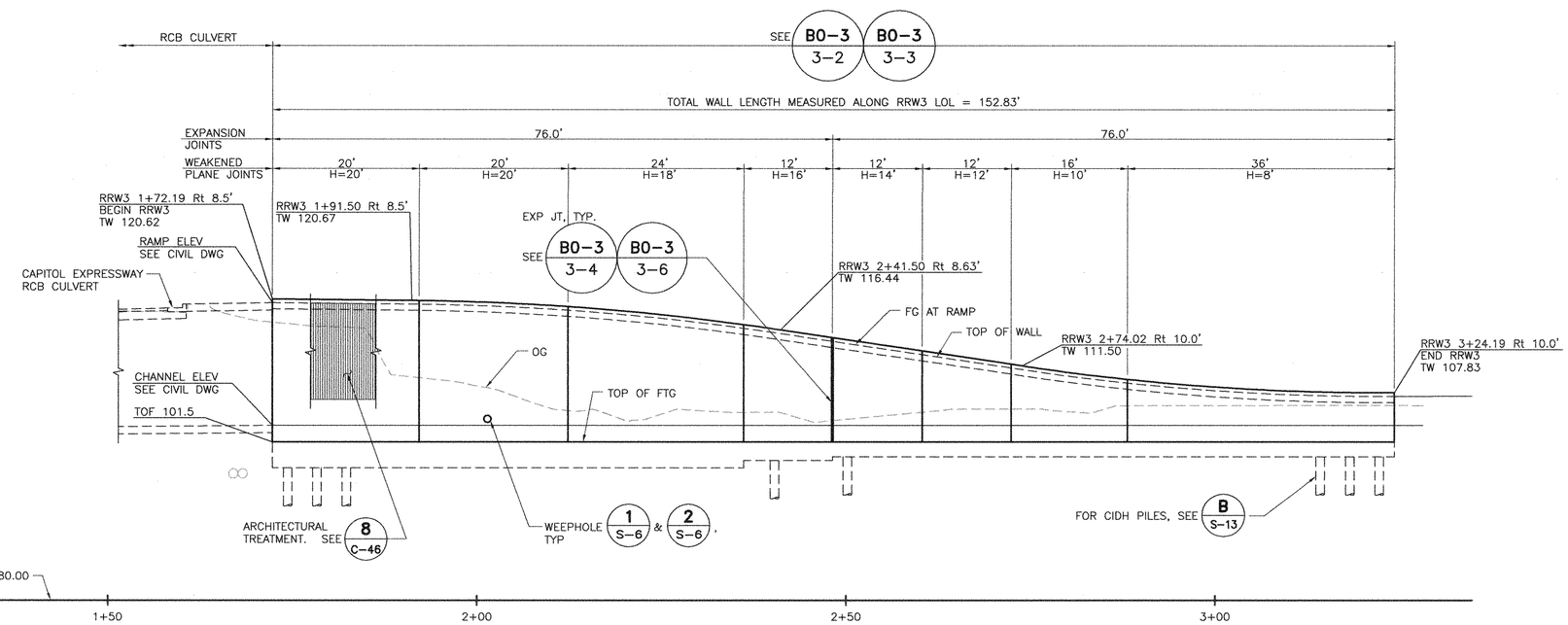

ELEVATION B
1" = 10'

NOTES:

1. "H" INDICATES RETAINED SOIL HEIGHT.
2. DISTANCES SHOWN ARE ALONG RWLOL.
3. FOR TOP OF WALL ELEVATIONS, ADDITIONAL LAYOUT AND PROFILE INFORMATION NOT SHOWN, SEE CIVIL PLANS.
4. TOP OF FOOTING PROFILES ARE LEVEL UNLESS NOTED OTHERWISE.

REV	DESCRIPTION	DATE	APPR.	REFERENCE INFORMATION AND NOTES

BIGGS CARDOSA ASSOCIATES INC
STRUCTURAL ENGINEERS
865 The Alameda
San Jose, California 95126
408-296-5515
BCA

DATE	05-18-10
DESIGN	D.L.L.
DRAWN	S.M.H.
CHECKED	
A.P.N.	

ENGINEERING CERTIFICATION
REGISTERED PROFESSIONAL ENGINEER SAMARTH M HARNE No. 2639 Exp. 12/31/10 STRUCTURAL STATE OF CALIFORNIA
PROJECT ENGINEER — DATE 5/18/10

Santa Clara Valley Water District
ACCEPTED BY DISTRICT
Dennis Cheong 6/1/10
PROJECT ENGINEER — DATE

PROJECT NAME AND SHEET DESCRIPTION:
LOWER SILVER CREEK REACHES 4, 5 & 6A
RAMP RETAINING WALL ELEVATIONS AT CAPITOL EXPRESSWAY

SCALE: AS SHOWN
VERIFY SCALES: 0 — 1"
BAR IS ONE INCH ON ORIGINAL DRAWING IF NOT ONE INCH ON THIS SHEET, ADJUST SCALES ACCORDINGLY

PROJECT NUMBER: 40264008
SHEET CODE: S-25
PAGE NUMBER: 109 OF 188

DOCUMENT NUMBER: CAD_XX-X-XXXX-XXXXX
FILENAME: W:\2001\2001093A\2001093AS25
4026 - 43100

NOTES:

1. FOR 'NOTES' AND 'LEGEND', SEE SHEET S-27
2. INDICATES EXTENT OF STRUCTURE REMOVAL.

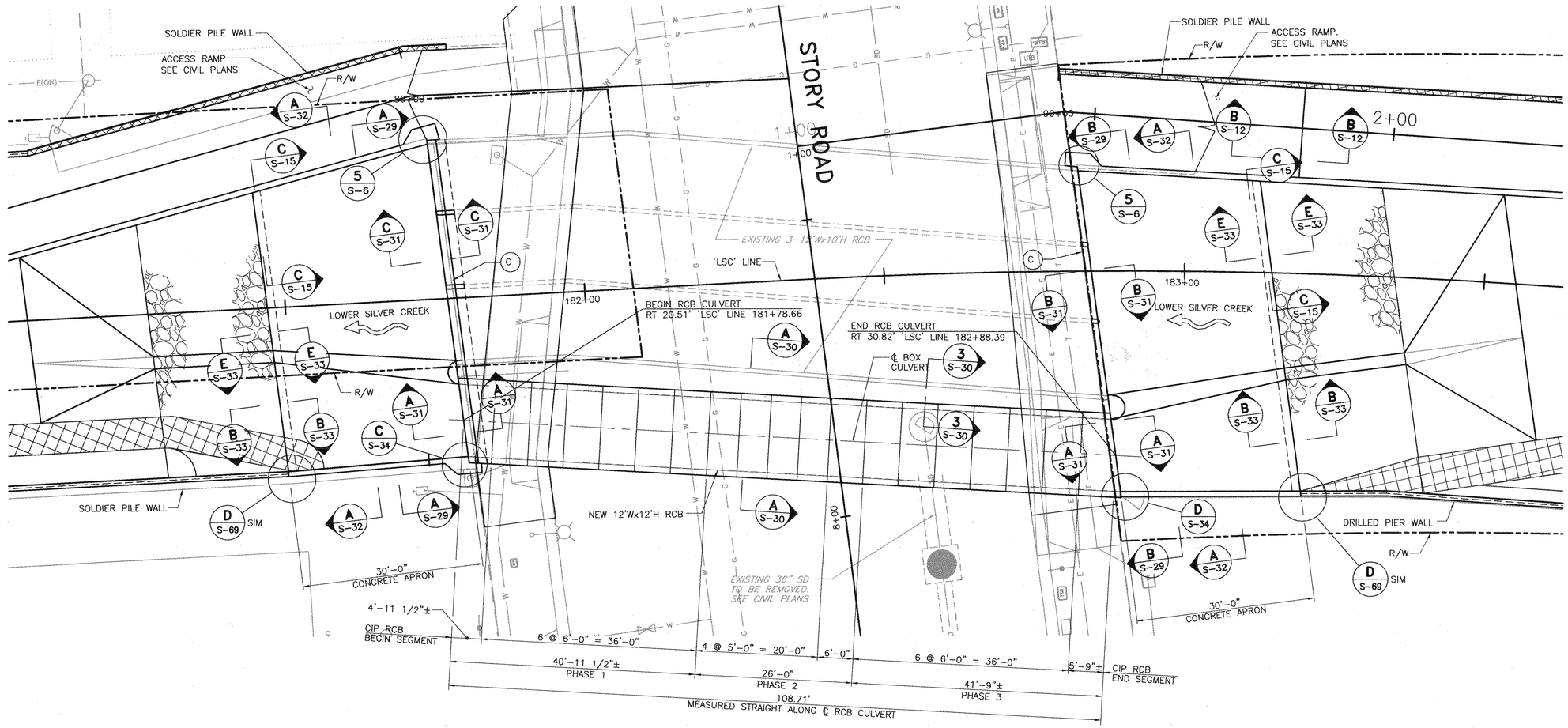

PLAN

1" = 10'

REV	DESCRIPTION	DATE	APPR.	REFERENCE INFORMATION AND NOTES

BIGGS CARDOSA ASSOCIATES INC
STRUCTURAL ENGINEERS
865 The Alameda
San Jose, California 95126
408-296-5515

BCA

DATE	
05-18-10	
DESIGN	D.L.L.
DRAWN	S.M.H.
CHECKED	A.P.N.

ENGINEERING CERTIFICATION
REGISTERED PROFESSIONAL ENGINEER SHASH M. NERGE No. 2639 Exp. 12/31/10 STRUCTURAL STATE OF CALIFORNIA
PROJECT ENGINEER — DATE 5/18/10

Santa Clara Valley Water District

ACCEPTED BY DISTRICT
Dennis Chang — 6/1/10
PROJECT ENGINEER — DATE

PROJECT NAME AND SHEET DESCRIPTION:

LOWER SILVER CREEK REACHES 4, 5 & 6A

CULVERT AND APRON PLAN AT STORY ROAD

SCALE	PROJECT NUMBER
AS SHOWN	40264008
VERIFY SCALES 0 — 1" BAR IS ONE INCH ON ORIGINAL DRAWING IF NOT ONE INCH ON THIS SHEET, ADJUST SCALES ACCORDINGLY	SHEET CODE: S-26
	PAGE NUMBER: 110 OF 188

DOCUMENT NUMBER: CAD_XX-X-XXXX-XXXXX
FILENAME: W:\2001\200109.3A\200109.3AS26
40264-43101

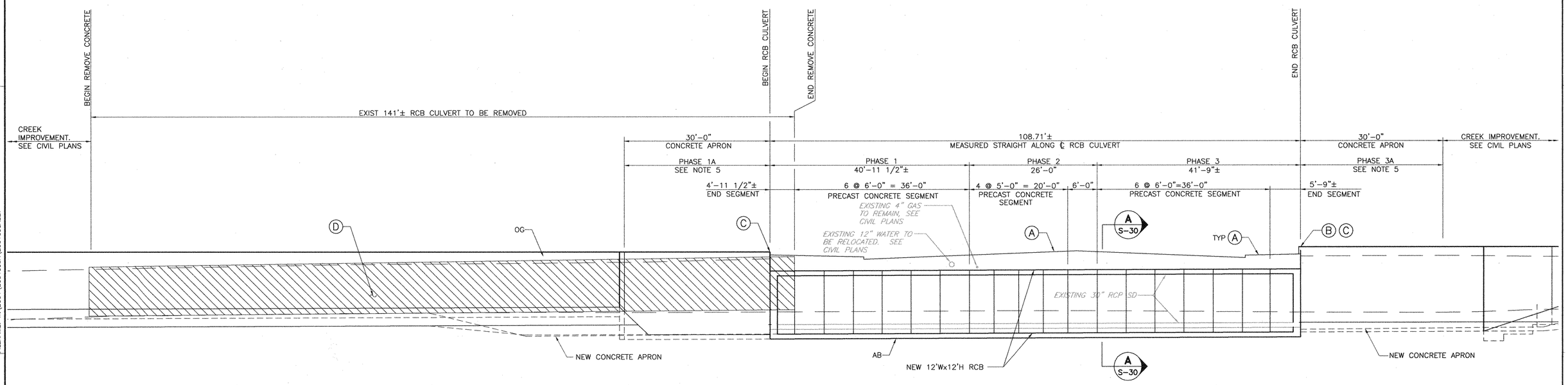

LONGITUDINAL SECTION – CONSTRUCTION PHASES

1" = 10'

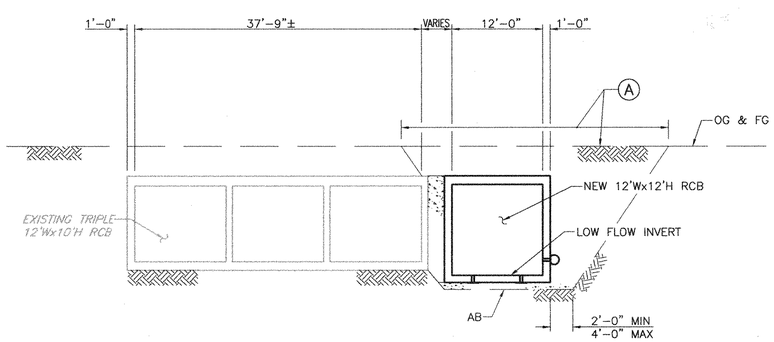

TYPICAL SECTION

1" = 10'

LEGEND

- (A) REMOVE AND RECONSTRUCT PAVEMENTS, GUTTERS, SIDEWALKS, MEDIANS, FENCE, ETC TO MATCH EXISTING.
- (B) REMOVE EXISTING CONCRETE HEADWALL AND STEEL RAILING AND CONSTRUCT NEW CONCRETE HEADWALL/BARRIER.
- (C) CONSTRUCT NEW CONCRETE HEADWALL/BARRIER.
- (D) REMOVE EXISTING 3–12WX10H CONCRETE CULVERT. SEE CIVIL DWGS.

NOTES

1. CONTRACTOR SHALL VERIFY ALL CONTROLLING FIELD DIMENSIONS BEFORE ORDERING OR FABRICATING ANY MATERIAL.
2. FOR CULVERT GENERAL NOTES, SEE SHEET S–2.
3. FOR CONTROL LINE DATA AND EXTENT OF DEMOLITION AND RECONSTRUCTION IN CREEK, SEE CIVIL PLANS.
4. FOR TRAFFIC CONTROL DURING CONSTRUCTION, SEE SHEET S–28.
5. PHASE 1A AND PHASE 3A SHALL BE EXTENDED PART OF 'PHASE 1' AND 'PHASE 3' CONSTRUCTIONS AND SHALL BE COMPLETED IN ACCELERATED MANNER DURING ANY PHASE OF CONSTRUCTION SO AS NOT TO FURTHER IMPACT THE TRAFFIC. ALSO, SEE SPECIFICATIONS.

REV	DESCRIPTION	DATE	APPR.	REFERENCE INFORMATION AND NOTES

BIGGS CARDOSA ASSOCIATES INC
STRUCTURAL ENGINEERS
865 The Alameda
San Jose, California 95126
408–296–5515
BCA

DATE	05–18–10
DESIGN	D.L.L.
DRAWN	S.M.H.
CHECKED	A.P.N.

ENGINEERING CERTIFICATION
REGISTERED PROFESSIONAL ENGINEER — ANTHONY M. NAPOLI — No. 2639 — Exp. 12/31/10 — STRUCTURAL — STATE OF CALIFORNIA
PROJECT ENGINEER — DATE 5/18/10

Santa Clara Valley Water District
ACCEPTED BY DISTRICT
Dennis Cheong — 6/1/10
PROJECT ENGINEER — DATE

PROJECT NAME AND SHEET DESCRIPTION:
LOWER SILVER CREEK REACHES 4, 5 & 6A
CULVERT SECTIONS AT STORY ROAD

SCALE: AS SHOWN
VERIFY SCALES: 0 — 1"
BAR IS ONE INCH ON ORIGINAL DRAWING IF NOT ONE INCH ON THIS SHEET, ADJUST SCALES ACCORDINGLY

PROJECT NUMBER: 40264008
SHEET CODE: S–27
PAGE NUMBER: 111 OF 188

DOCUMENT NUMBER: CAD_XX–X–XXXX–XXXXX
FILENAME: W:\2001\2001093A\2001093AS27
4026 - 43102

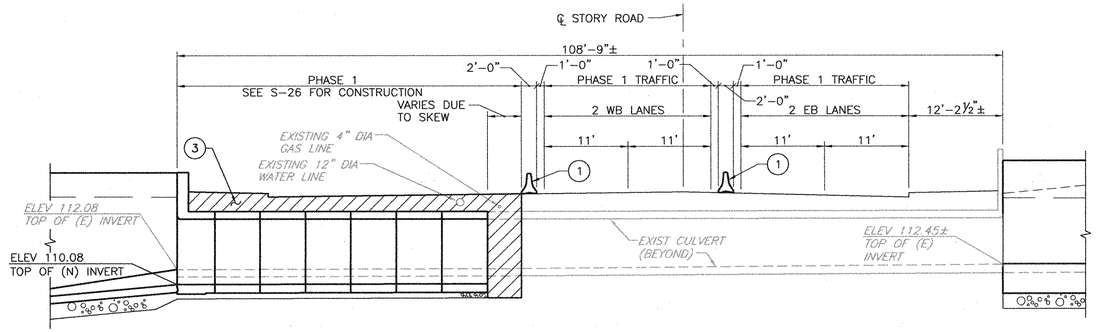

LONGITUDINAL SECTION PHASE 1

SCALE: 1" = 10'

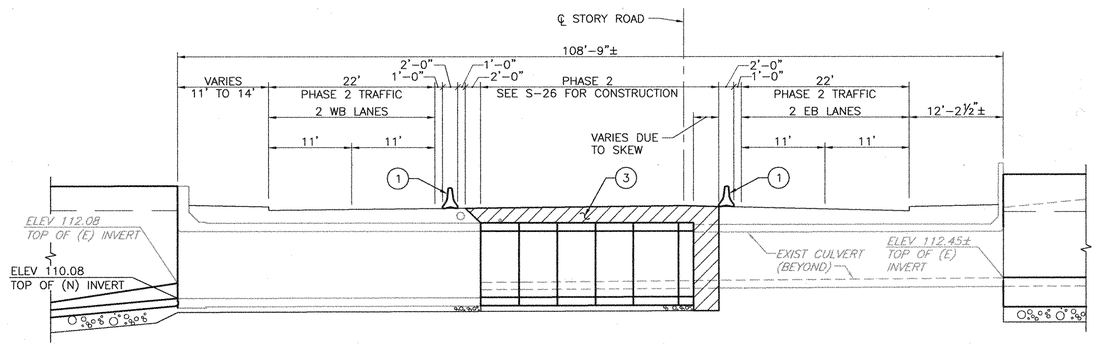

LONGITUDINAL SECTION PHASE 2

SCALE: 1" = 10'

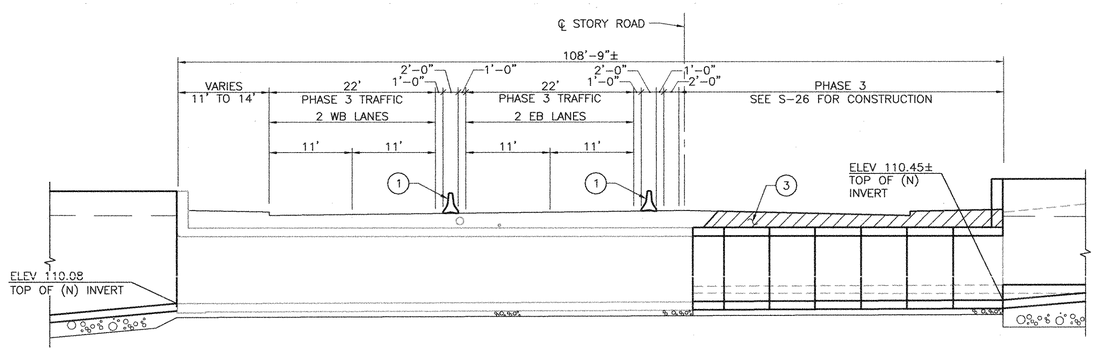

LONGITUDINAL SECTION PHASE 3

SCALE: 1" = 10'

NOTES:

1. TEMPORARY K-RAILING DURING CONSTRUCTION SEE CIVIL PLANS FOR LAYOUT
2. FOR ALL UTILITY RELOCATIONS SEE CIVIL PLANS
3. EXCAVATION & SHORING BY CONTRACTOR
4. FOR FINISH GRADE OF AC, TOP OF CURB, AND FLOW LINE ELEVATION, SEE CIVIL PLANS

LEGEND:

- W — INDICATES EXIST 12" DIA WATER LINE
- SS — INDICATES SANITARY SEWER
- G — INDICATES EXIST GAS LINE
- SD — INDICATES EXIST STORM DRAIN
- E(OH) — INDICATES EXIST OVERHEAD ELECTRIC LINE
- INDICATES EXCAVATION DURING PHASE

REV	DESCRIPTION	DATE	APPR.	REFERENCE INFORMATION AND NOTES

BIGGS CARDOSA ASSOCIATES INC
STRUCTURAL ENGINEERS
865 The Alameda
San Jose, California 95126
408-296-5515
BCA

DATE	ENGINEERING CERTIFICATION
05-18-10	REGISTERED PROFESSIONAL ENGINEER — RAFAEL M. TAPIA — No. 2639 — Exp. 12/31/10 — STRUCTURAL — STATE OF CALIFORNIA
DESIGN D.L.L.	5/18/10
DRAWN S.M.H.	PROJECT ENGINEER DATE
CHECKED A.P.N.	

Santa Clara Valley Water District

ACCEPTED BY DISTRICT

Dennis Cheung 6/11/10

PROJECT ENGINEER DATE

PROJECT NAME AND SHEET DESCRIPTION:

LOWER SILVER CREEK REACHES 4, 5 & 6A

TRAFFIC PHASING SECTIONS AT STORY ROAD

SCALE: AS SHOWN

VERIFY SCALES: 0 — 1"
BAR IS ONE INCH ON ORIGINAL DRAWING IF NOT ONE INCH ON THIS SHEET, ADJUST SCALES ACCORDINGLY

PROJECT NUMBER: 40264008

SHEET CODE: S-28

PAGE NUMBER: 112 OF 188

DOCUMENT NUMBER: CAD_XX-X-XXXX-XXXXX

FILENAME: W:\2001\2001093A\2001093AS28

4026 - 4/3/03

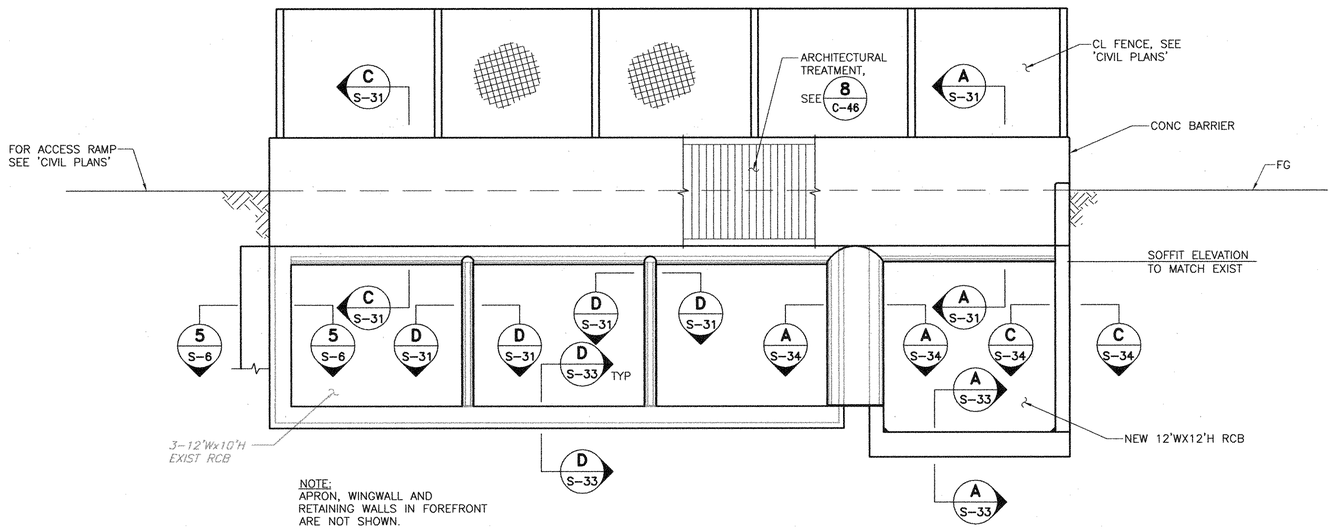

NOTE:
APRON, WINGWALL AND RETAINING WALLS IN FOREFRONT ARE NOT SHOWN.

ELEVATION (A) NORTH END WALL
3/16" = 1'-0"

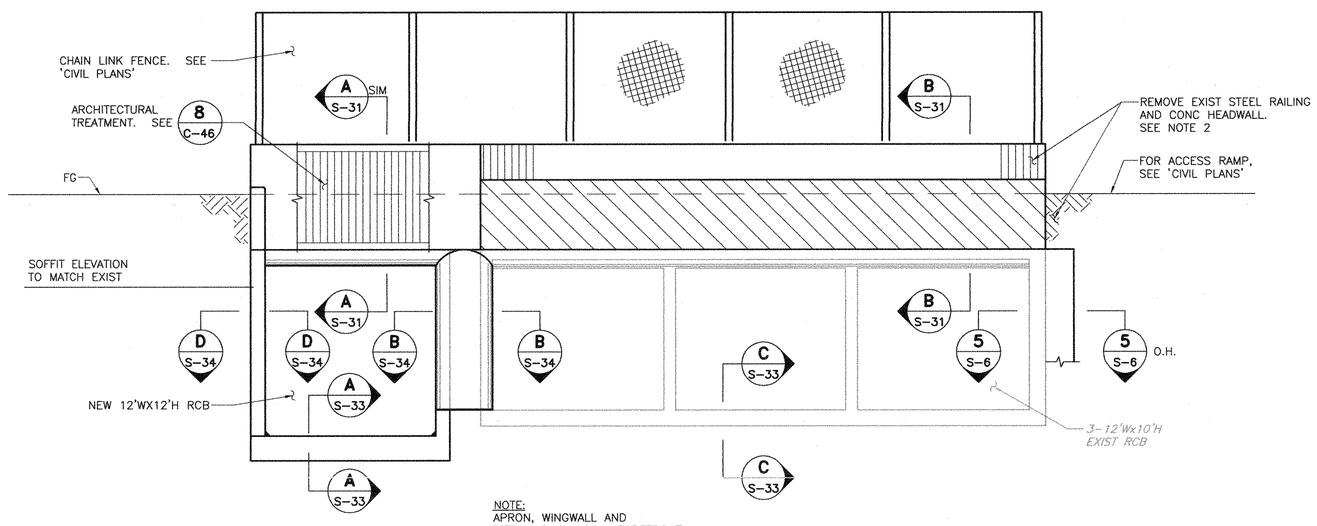

NOTE:
APRON, WINGWALL AND RETAINING WALLS IN FOREFRONT ARE NOT SHOWN.

ELEVATION (B) SOUTH END WALL
3/16" = 1'-0"

NOTES:

1. CONTRACTOR SHALL VERIFY ALL CONTROLLING FIELD DIMENSIONS BEFORE ORDERING OR FABRICATING ANY MATERIAL.
2. AT EXISTING CONCRETE BARRIER REMOVAL, PROTECT AND SAVE EXISTING VERTICAL REINFORCING BARS FOR EMBADMENT INTO NEW BARRIER/HEADWALL.

INDICATES EXTENT OF CONCRETE REMOVAL

REV	DESCRIPTION	DATE	APPR.	REFERENCE INFORMATION AND NOTES

BIGGS CARDOSA ASSOCIATES INC
STRUCTURAL ENGINEERS
865 The Alameda
San Jose, California 95126
408-296-5515

DATE	
05-18-10	
DESIGN	D.L.L.
DRAWN	S.M.H.
CHECKED	A.P.N.

ENGINEERING CERTIFICATION
REGISTERED PROFESSIONAL ENGINEER ANWASH M. TAYLOR No. 2639 Exp. 12/31/10 STRUCTURAL STATE OF CALIFORNIA
PROJECT ENGINEER — DATE 5/10/10

Santa Clara Valley Water District
ACCEPTED BY DISTRICT
Dennis Cheong 6/1/10
PROJECT ENGINEER — DATE

PROJECT NAME AND SHEET DESCRIPTION:
LOWER SILVER CREEK REACHES 4, 5 & 6A
CULVERT ELEVATIONS AT STORY ROAD

SCALE: AS SHOWN
VERIFY SCALES: 0 — 1"
BAR IS ONE INCH ON ORIGINAL DRAWING IF NOT ONE INCH ON THIS SHEET, ADJUST SCALES ACCORDINGLY

PROJECT NUMBER: 40264008
SHEET CODE: S-29
PAGE NUMBER: 113 OF 188

DOCUMENT NUMBER: CAD_XX-X-XXXX-XXXXX
FILENAME: W:\2001\2001093A\2001093AS29
4026-43104

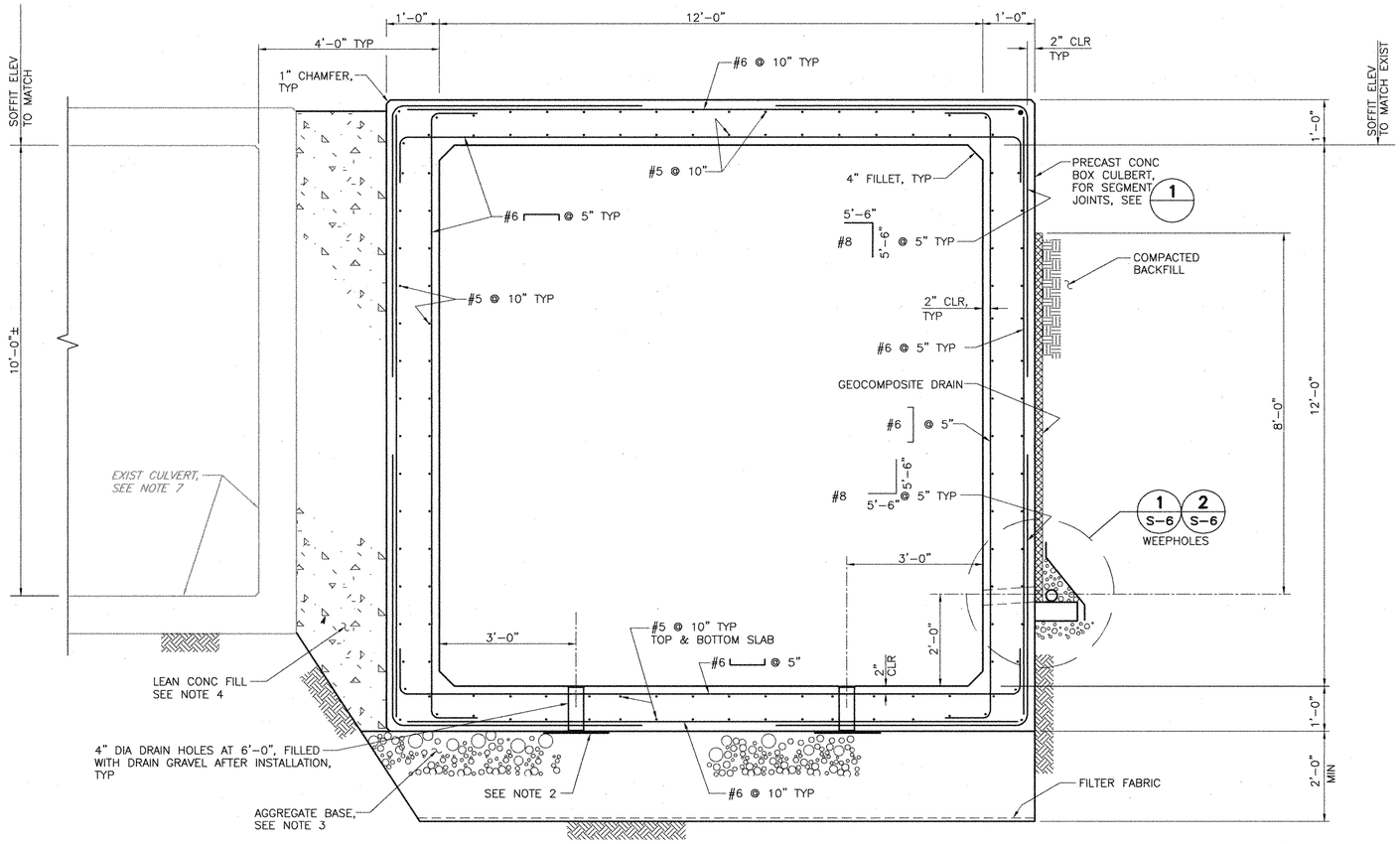

SECTION A TYPICAL
1" = 20'

NOTES:

1. CONTRACTOR SHALL FIELD VERIFY ALL LAYOUTS, EXISTING CONSTRUCTION AND CONTROLLING FIELD DIMENSIONS PRIOR TO ORDERING OR FABRICATING ANY MATERIAL.
2. INSTALL 12"X12" ALUMINUM OR GALVANIZED STEEL WIRE 1/4" MESH HARDWARE CLOTH (MIN 20 GAUGE WIRE), SECURED FIRMLY TO CONCRETE, CENTERED ON THE HOLE.
3. CLASS 3 AGGREGATE BASE SHALL BE COMPACTED AND FINISHED AT TOP TO RECEIVE PRE CAST BOX CULVERT FOR FULL BEARING.
4. LEAN CONCRETE SHALL BE HIGH EARLY STRENGTH MIX (F'C = 1500 PSI). CONTRACTOR SHALL SUBMIT MIX-DESIGN PRIOR TO CONSTRUCTION. CONCRETE FILL SHALL BE STARTED ONLY AFTER THE BACKFILL AND COMPACTION ON OUTER SIDE OF THE BOX CULVERT IS COMPLETED UP TO HALF THE BOX HEIGHT.
5. REINFORCEMENT SHOWN IS FOR PRECAST (PC) CONCRETE BOX CULVERT FOR 4'-0" AND 5'-0" LENGTHS. REINFORCEMENT BAR SPLICES SHALL NOT BE ALLOWED UNLESS SHOWN OR NOTED.
6. CLEAN CONCETE SURFACE AND INSTALL EXTEND SEALING BAND AT VERTICAL EXTERIOR FACE & TOP OF THE PRECAST SECTIONS PRIOR TO BACKFILL.
7. STRUTTING/TEMPORARY SHORING SHALL BE REQUIRED, SEE SHEET S-2.
8. ROUGHEN ENTIRE CONCRETE SURFACE TO 1/2" AMPLITUDE TO ALL CONSTRUCTION JOINTS, AND CLEAN PRIOR TO NEW CONCRETE POUR, UNLESS NOTED OTHERWISE.

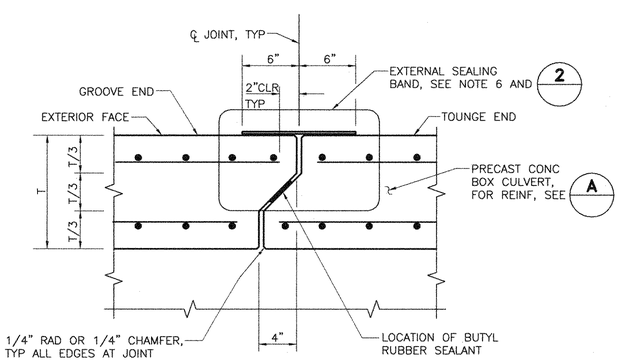

DETAIL 1 JOINT
1 1/2" = 1'-0" (S-30)

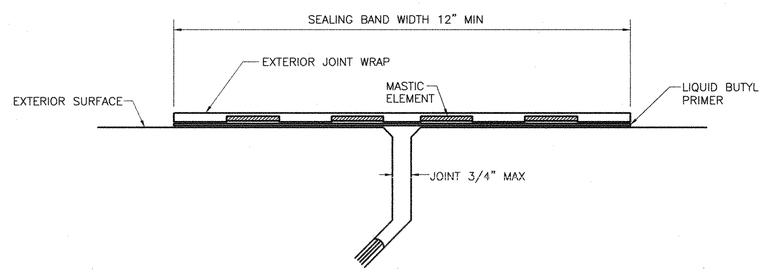

DETAIL 2 EXTERNAL SEALING BAND SCHEMATIC
NO SCALE (S-30)

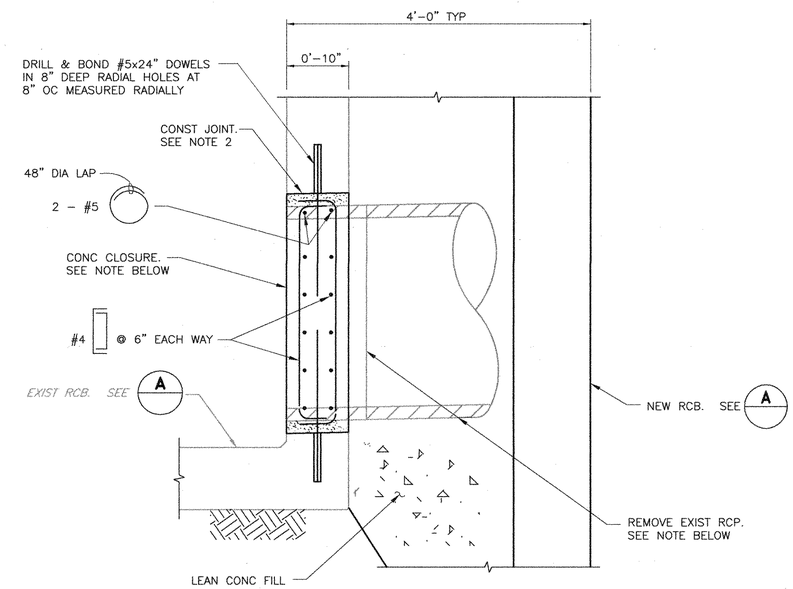

NOTE: SAW CUT AND REMOVE PORTION OF PIPE AND FORM & CONSTRUCT CONCRETE CLOSURE PRIOR TO STARTING 'STAGE CONSTRUCTIONS'

DETAIL 3
NO SCALE

REV	DESCRIPTION	DATE	APPR.	REFERENCE INFORMATION AND NOTES

BIGGS CARDOSA ASSOCIATES INC
STRUCTURAL ENGINEERS
865 The Alameda
San Jose, California 95126
408-296-5515
BCA

DATE	05-18-10
DESIGN	D.L.L.
DRAWN	S.M.H.
CHECKED	A.P.N.

ENGINEERING CERTIFICATION
REGISTERED PROFESSIONAL ENGINEER SHYAMSH M. HARIHARAN No. 2639 Exp. 12/31/10 STRUCTURAL STATE OF CALIFORNIA
PROJECT ENGINEER — DATE 5/18/10

Santa Clara Valley Water District
ACCEPTED BY DISTRICT
Dennis Cheong 6/1/10
PROJECT ENGINEER — DATE

PROJECT NAME AND SHEET DESCRIPTION:
LOWER SILVER CREEK REACHES 4, 5 & 6A
CULVERT SECTIONS AND DETAILS AT STORY ROAD

SCALE: AS SHOWN
VERIFY SCALES: 0 — 1"
BAR IS ONE INCH ON ORIGINAL DRAWING IF NOT ONE INCH ON THIS SHEET, ADJUST SCALES ACCORDINGLY

PROJECT NUMBER: 40264008
SHEET CODE: S-30
PAGE NUMBER: 114 OF 188

DOCUMENT NUMBER: CAD_XX-X-XXXX-XXXXX
FILENAME: W:\2001\2001093A\2001093AS30
9026-93/05

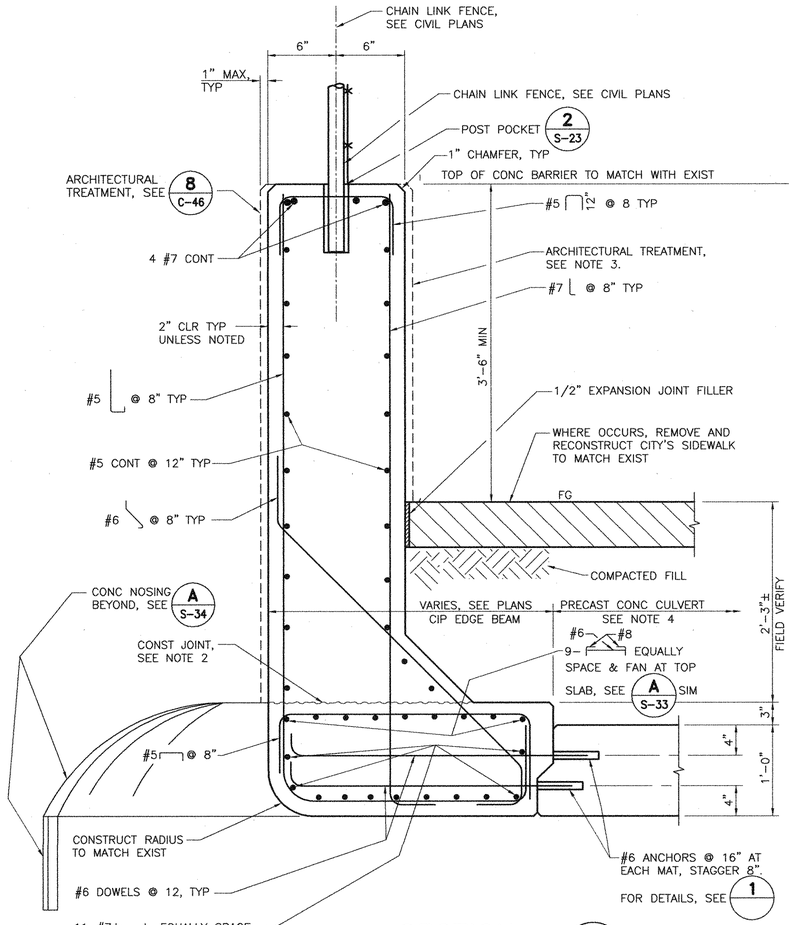

SECTION A
NOT TO SCALE

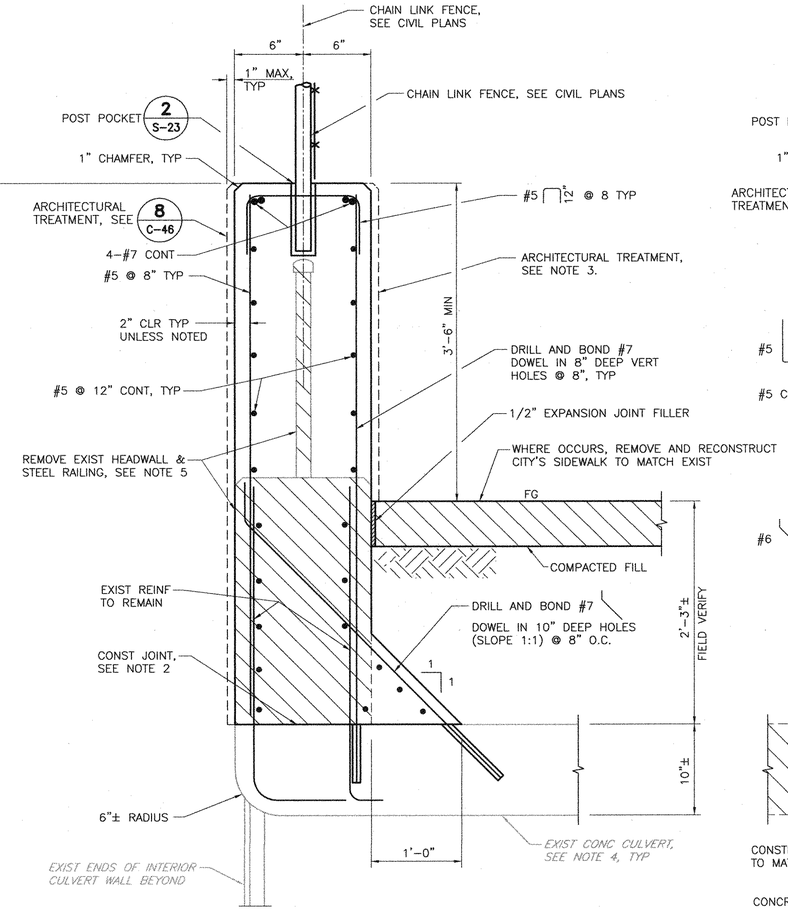

SECTION B
NOT TO SCALE

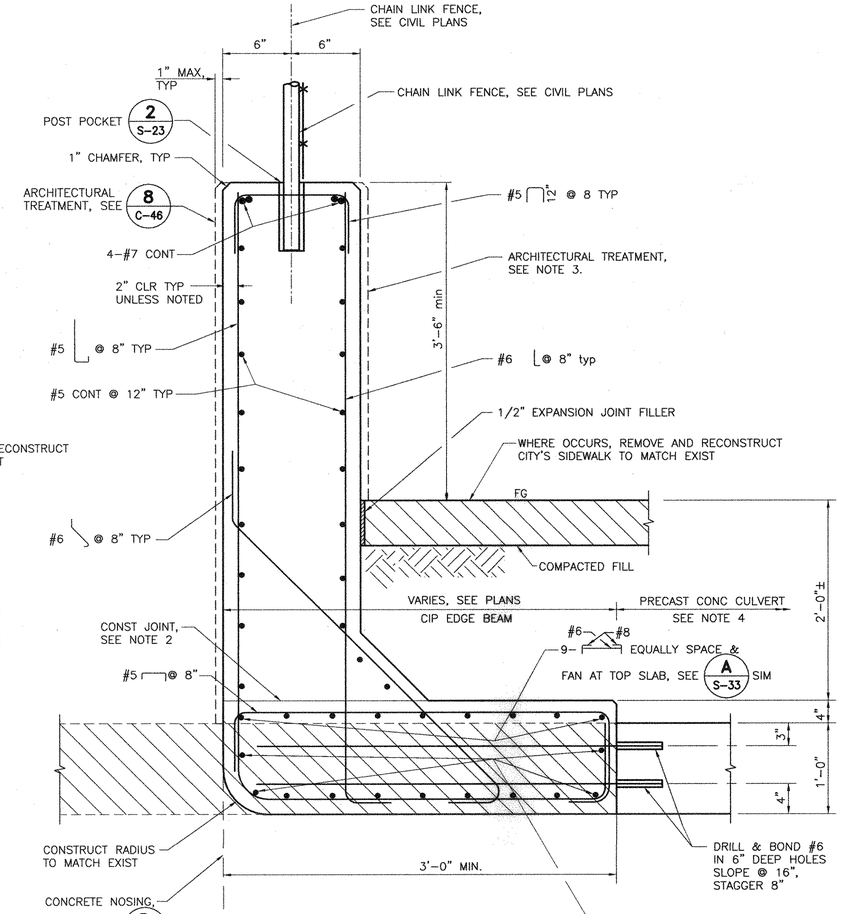

SECTION C
NOT TO SCALE

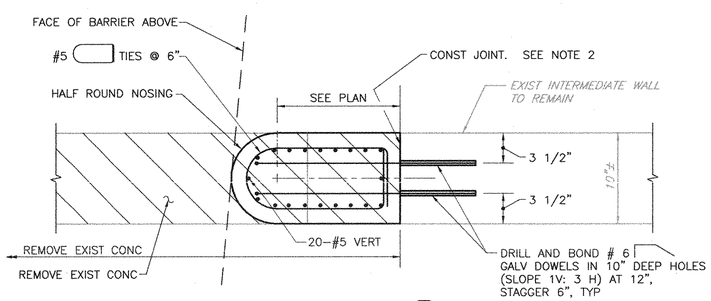

SECTION D
NOT TO SCALE

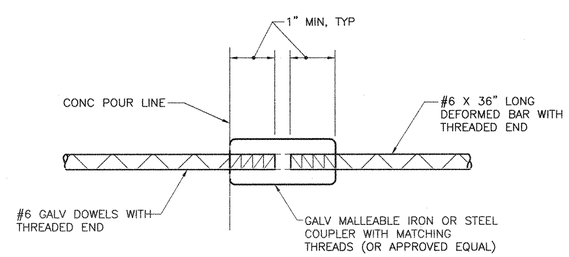

DETAIL 1 ANCHORAGE
NOT TO SCALE

NOTES:

1. CONTRACTOR SHALL VERIFY ALL CONTROLLING FIELD DIMENSIONS BEFORE ORDERING OR FABRICATING ANY MATERIAL.
2. ROUGHEN ENTIRE CONCRETE SURFACE TO 1/4" AMPLITUDE AT ALL CONSTRUCTION JOINTS, AND CLEAN PRIOR TO NEW CONCRETE POUR, UNLESS NOTED OTHERWISE.
3. CONTRACTOR SHALL COORDINATE WITH THE 'CITY OF SAN JOSE PUBLIC WORKS' FOR ARCHITECTURAL TREATMENT AT NEW CONCRETE BARRIERS AND SUBMIT SHOP DRAWINGS TO THE ENGINEER FOR REVIEW PRIOR TO CONSTRUCTION.
4. TEMOPORARY STRUTTING SHALL BE REQUIRED AT EXISTING AND NEW CULVERT CONSTRUCTION PER CALTRAN'S STANDARD PLAN D88, UNLESS NOTED OTHERWISE.
5. EXIST REINFORCEMENT AT HEADWALL REMOVAL SHALL BE SAVED WITHOUT DAMAGE FOR EMBEDDING THEM INTO NEW CONCRETE.

REV	DESCRIPTION	DATE	APPR.	REFERENCE INFORMATION AND NOTES

BIGGS CARDOSA ASSOCIATES INC
STRUCTURAL ENGINEERS
865 The Alameda
San Jose, California 95126
408-296-5515
BCA

DATE 05-18-10
DESIGN D.L.L.
DRAWN S.M.H.
CHECKED A.P.N.

ENGINEERING CERTIFICATION
REGISTERED PROFESSIONAL ENGINEER DAVID M. HARRIS No. 2639 Exp. 12/31/10 STRUCTURAL STATE OF CALIFORNIA
PROJECT ENGINEER 5/18/10 DATE

Santa Clara Valley Water District
ACCEPTED BY DISTRICT
Dennis Cheung 6/1/10
PROJECT ENGINEER DATE

PROJECT NAME AND SHEET DESCRIPTION:
LOWER SILVER CREEK REACHES 4, 5 & 6A
CULVERT CONCRETE BARRIER DETAILS AT STORY ROAD

SCALE: AS SHOWN
VERIFY SCALES 0 1"
BAR IS ONE INCH ON ORIGINAL DRAWING IF NOT ONE INCH ON THIS SHEET, ADJUST SCALES ACCORDINGLY

PROJECT NUMBER: 40264008
SHEET CODE: S-31
PAGE NUMBER: 115 OF 188

DOCUMENT NUMBER: CAD_XX-X-XXXX-XXXXX
FILENAME: W:\2001\2001093A\2001093AS31
4026 - 4/3/06

NOTES:

1. CONTRACTOR SHALL FIELD VERIFY ALL LAYOUTS, EXISTING CONSTRUCTION AND CONTROLLING FIELD DIMENSIONS PRIOR TO ORDERING OR FABRICATING ANY MATERIAL.
2. FOR TOP OF WALL (TOW) AND INVERT ELEVATIONS AT APRON SLAB, SEE 'CIVIL PLANS'.
3. ROUGHEN ENTIRE CONCRETE SURFACE TO 1/2" AMPLITUDE AND CLEAN PRIOR TO NEW CONCRETE POUR.
4. FOR LOCATIONS OF CONCRETE INVERT WEEP HOLES AT TEN (10) FEET MAXIMUM SPACINGS, SEE APRON PLANS. THE WEEP HOLES COULD BE STRADDLED HORIZONTALLY TO CLEAR REINFORCING BARS BY MINIMUM 2".

DETAIL 1 CONCRETE INVERT WEEP HOLE
NO SCALE

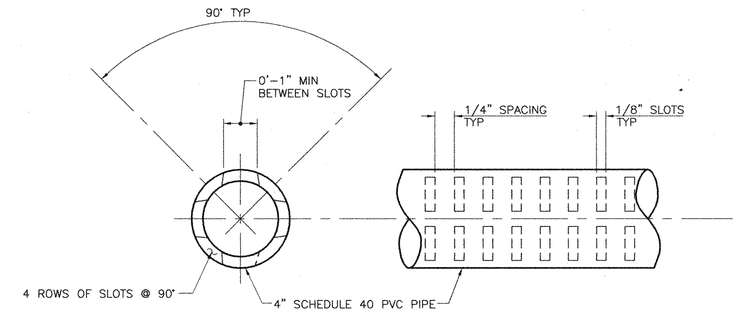

DETAIL 2 PVC DRAIN PIPE SLOTS
NO SCALE

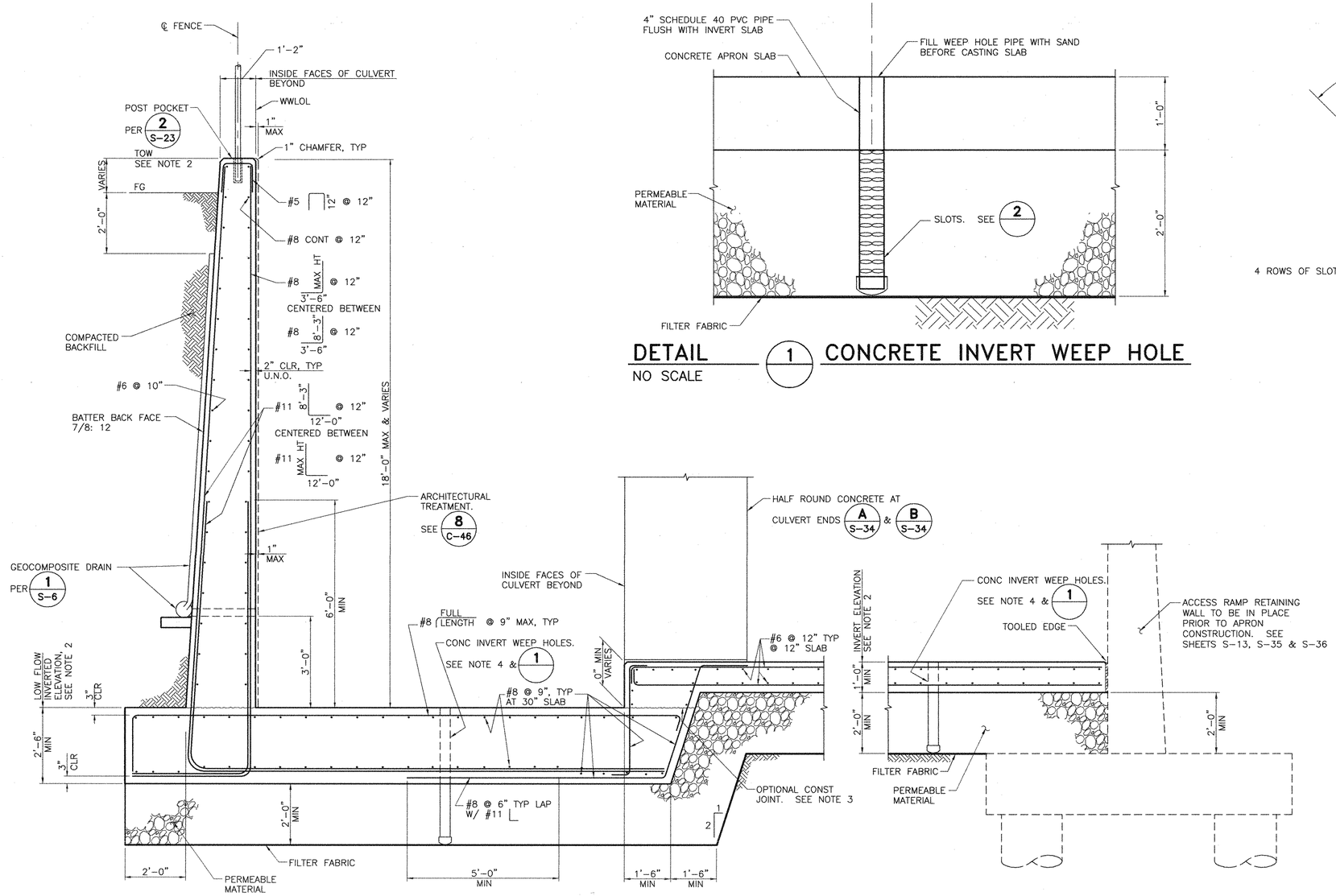

TYPICAL SECTION A AT L-WALL APRON
1/2" = 1'-0"

REV	DESCRIPTION	DATE	APPR.	REFERENCE INFORMATION AND NOTES

BIGGS CARDOSA ASSOCIATES INC
STRUCTURAL ENGINEERS
865 The Alameda
San Jose, California 95126
408-296-5515
BCA

DATE	05-18-10
DESIGN	RGS
DRAWN	S.M.H.
CHECKED	A.P.N.

ENGINEERING CERTIFICATION
REGISTERED PROFESSIONAL ENGINEER ALWYN M. PEARSE No. 2639 Exp. 12/31/10 STRUCTURAL STATE OF CALIFORNIA
PROJECT ENGINEER — DATE 5/18/10

Santa Clara Valley Water District
ACCEPTED BY DISTRICT
Dennis Chong 4/1/10
PROJECT ENGINEER — DATE

PROJECT NAME AND SHEET DESCRIPTION:
LOWER SILVER CREEK REACHES 4, 5 & 6A
L-WALL APRON SECTIONS AND DETAILS AT STORY ROAD

SCALE: AS SHOWN
VERIFY SCALES: 0 — 1"
BAR IS ONE INCH ON ORIGINAL DRAWING IF NOT ONE INCH ON THIS SHEET, ADJUST SCALES ACCORDINGLY

PROJECT NUMBER: 40264008
SHEET CODE: S-32
PAGE NUMBER: 116 OF 188

DOCUMENT NUMBER: CAD_XX-X-XXXX-XXXXX
FILENAME: W:\2001\2001093A\20010934S32
40264-43107

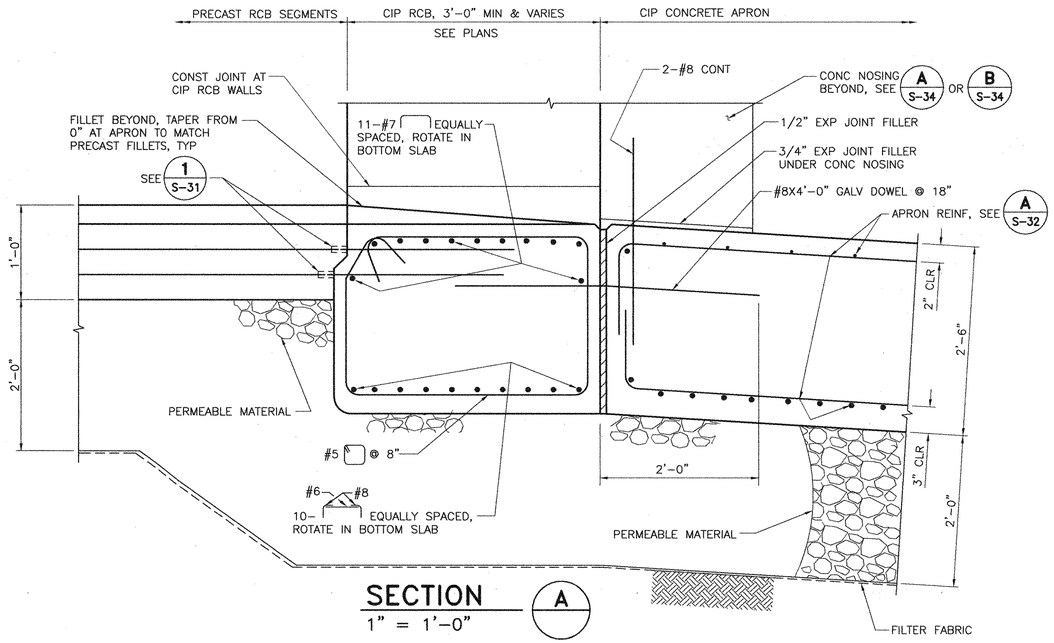

SECTION A
1" = 1'-0"

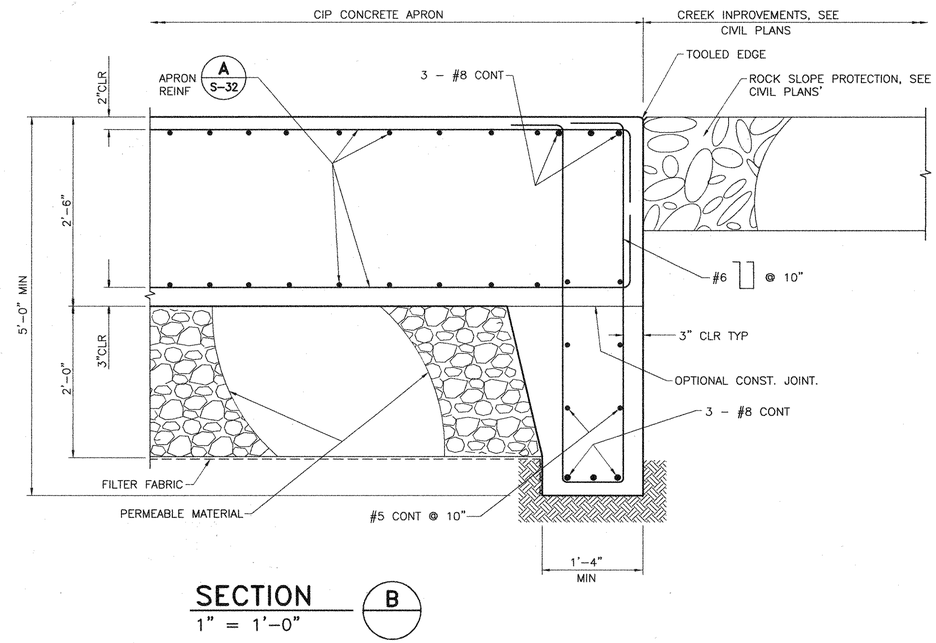

SECTION B
1" = 1'-0"

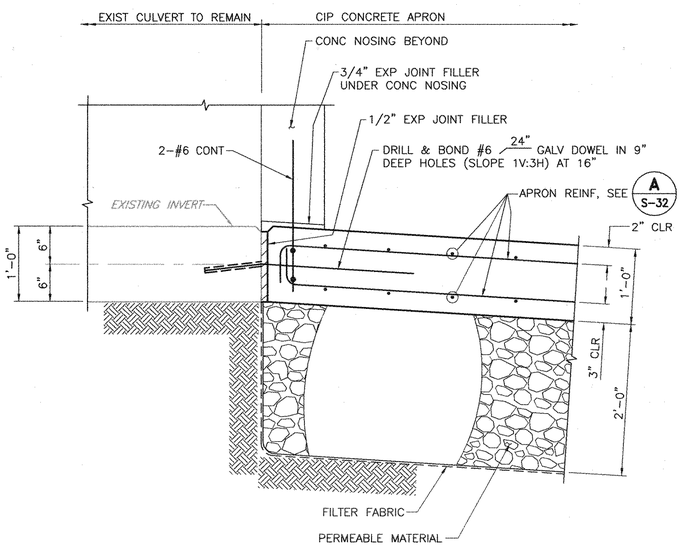

SECTION C
1" = 1'-0"

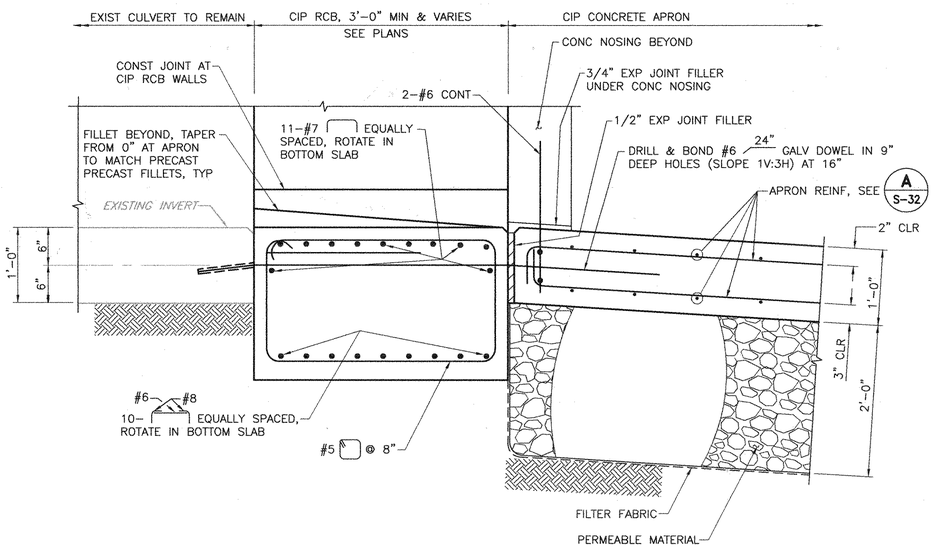

SECTION D
1" = 1'-0"

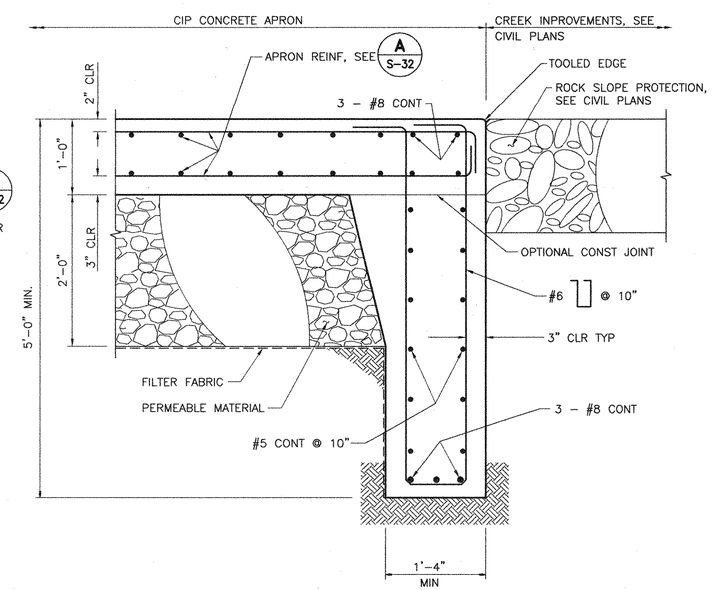

SECTION E
1" = 1'-0"

REV	DESCRIPTION	DATE	APPR.	REFERENCE INFORMATION AND NOTES

BIGGS CARDOSA ASSOCIATES INC
STRUCTURAL ENGINEERS
865 The Alameda
San Jose, California 95126
408-296-5515
BCA

DATE
05-18-10
DESIGN
D.L.L.
DRAWN
S.M.H.
CHECKED
A.P.N.

ENGINEERING CERTIFICATION
REGISTERED PROFESSIONAL ENGINEER JAMES M. HATCH No. 2639 Exp. 12/31/10 STRUCTURAL STATE OF CALIFORNIA
5/12/10
PROJECT ENGINEER DATE

Santa Clara Valley Water District
ACCEPTED BY DISTRICT
Dennis Cheong 6/1/10
PROJECT ENGINEER DATE

PROJECT NAME AND SHEET DESCRIPTION:
LOWER SILVER CREEK REACHES 4, 5 & 6A
APRON SECTIONS AND DETAILS AT STORY ROAD

SCALE: AS SHOWN
VERIFY SCALES: 0 1"
BAR IS ONE INCH ON ORIGINAL DRAWING IF NOT ONE INCH ON THIS SHEET, ADJUST SCALES ACCORDINGLY

PROJECT NUMBER: 40264008
SHEET CODE: S-33
PAGE NUMBER: 117 OF 188

DOCUMENT NUMBER: CAD_XX-X-XXXX-XXXXX
FILENAME: W:\2001\2001093A\2001093AS33
4026-Y3/08

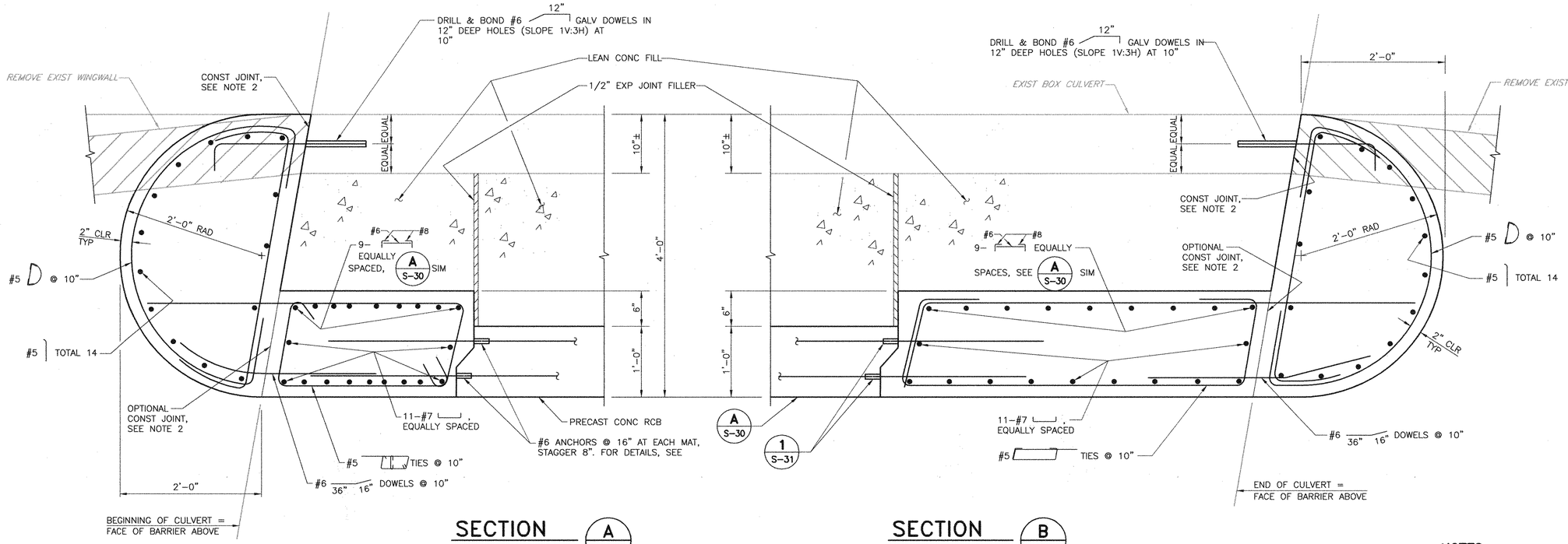

SECTION A
NOT TO SCALE

SECTION B
NOT TO SCALE

NOTES:

1. CONTRACTOR SHALL VERIFY ALL CONTROLLING FIELD DIMENSIONS BEFORE ORDERING OR FABRICATING ANY MATERIAL.
2. ROUGHEN ENTIRE CONCRETE SURFACE TO 1/4" AMPLITUDE AT ALL CONSTRUCTION JOINTS AND CLEAN PRIOR TO NEW CONCRETE POUR, UNLESS NOTE.

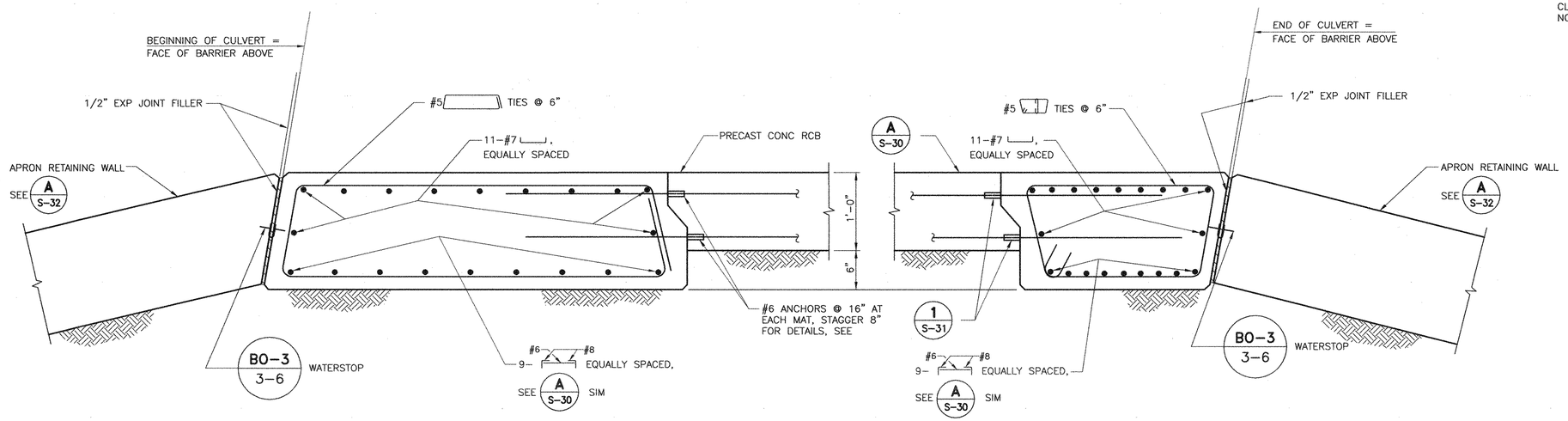

SECTION C
NOT TO SCALE

SECTION D
NOT TO SCALE

REV	DESCRIPTION	DATE	APPR.	REFERENCE INFORMATION AND NOTES

BIGGS CARDOSA ASSOCIATES INC
STRUCTURAL ENGINEERS
865 The Alameda
San Jose, California 95126
408-296-5515
BCA

DATE 05-18-10
DESIGN D.L.L.
DRAWN S.M.H.
CHECKED A.P.N.

ENGINEERING CERTIFICATION
REGISTERED PROFESSIONAL ENGINEER JAGDISH M. HARIANI No. 2639 Exp. 12/31/10 STRUCTURAL STATE OF CALIFORNIA
PROJECT ENGINEER 5/18/10 DATE

Santa Clara Valley Water District
ACCEPTED BY DISTRICT
Dennis Cheung 6/1/10
PROJECT ENGINEER DATE

PROJECT NAME AND SHEET DESCRIPTION:
LOWER SILVER CREEK REACHES 4, 5 & 6A
CULVERT SECTIONS AT STORY ROAD

SCALE AS SHOWN
VERIFY SCALES 0 1"
BAR IS ONE INCH ON ORIGINAL DRAWING IF NOT ONE INCH ON THIS SHEET, ADJUST SCALES ACCORDINGLY

PROJECT NUMBER 40264008
SHEET CODE: S-34
PAGE NUMBER: 118 OF 188

DOCUMENT NUMBER: CAD_XX-X-XXXX-XXXXX
FILENAME: W:\2001\2001093A\2001093AS34
4026 - 4/3/09

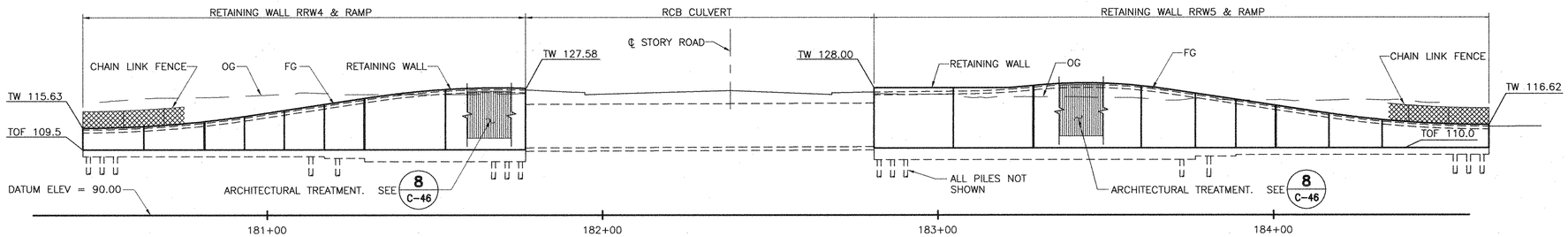

DEVELOPED RAMP WALL ELEVATION

SCALE: 1" = 20'

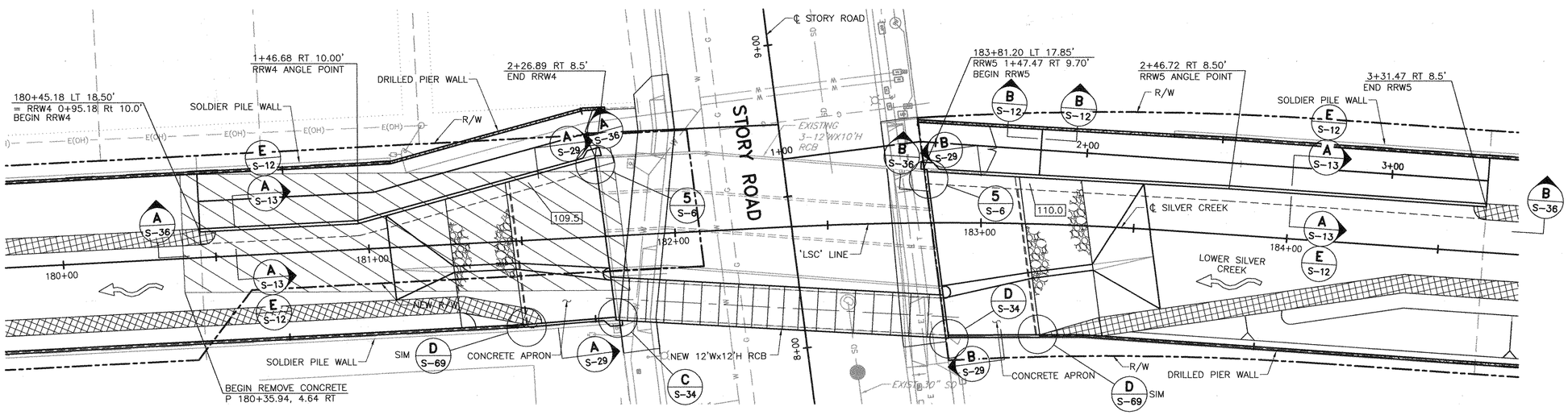

PLAN

SCALE: 1" = 20'

NOTES:

1. FOR GENERAL NOTES, SEE 'STRUCTURAL GENERAL NOTES' SHEET.
2. X117.2 INDICATES EXISTING GROUND SPOT ELEVATION.
3. FOR RAMP CONTROL LINE, SEE CIVIL PLANS.

LEGEND:

G	INDICATES EXISTING GAS LINE
E(OH)	INDICATES EXISTING OVERHEAD ELECTRIC LINE
	INDICATES EXISTING RCB CULVERT. SEE CIVIL PLANS
109.5'	INDICATES TOP OF FOOTING ELEVATION

REV	DESCRIPTION	DATE	APPR.	REFERENCE INFORMATION AND NOTES

BIGGS CARDOSA ASSOCIATES INC
STRUCTURAL ENGINEERS
865 The Alameda
San Jose, California 95126
408-296-5515

DATE 05-18-10
DESIGN D.L.L.
DRAWN S.M.H.
CHECKED
A.P.N.

ENGINEERING CERTIFICATION
REGISTERED PROFESSIONAL ENGINEER MARK M. HARRIS No. 2639 Exp. 12/31/10 STRUCTURAL STATE OF CALIFORNIA
5/18/10
PROJECT ENGINEER DATE

Santa Clara Valley Water District
ACCEPTED BY DISTRICT
Dennis Cheung 6/1/10
PROJECT ENGINEER DATE

PROJECT NAME AND SHEET DESCRIPTION:

LOWER SILVER CREEK REACHES 4, 5 & 6A

CULVERT APRON AND RAMP PLAN & SECTION AT STORY ROAD

SCALE: AS SHOWN
VERIFY SCALES 0 1"
BAR IS ONE INCH ON ORIGINAL DRAWING IF NOT ONE INCH ON THIS SHEET, ADJUST SCALES ACCORDINGLY

PROJECT NUMBER 40264008
SHEET CODE: S-35
PAGE NUMBER: 119 OF 188

DOCUMENT NUMBER: CAD_XX-X-XXXX-XXXXX
FILENAME: W:\2001\2001093A\2001093AS35
4026 - 43/10

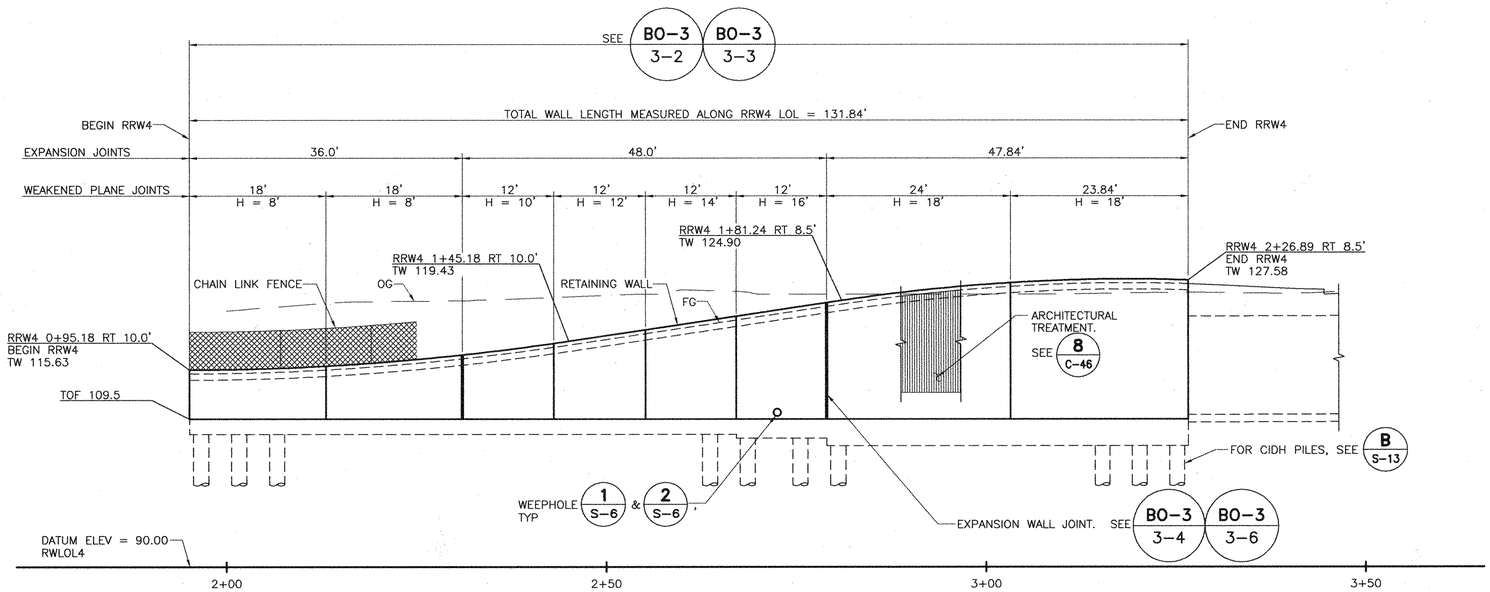

ELEVATION A
1" = 10'

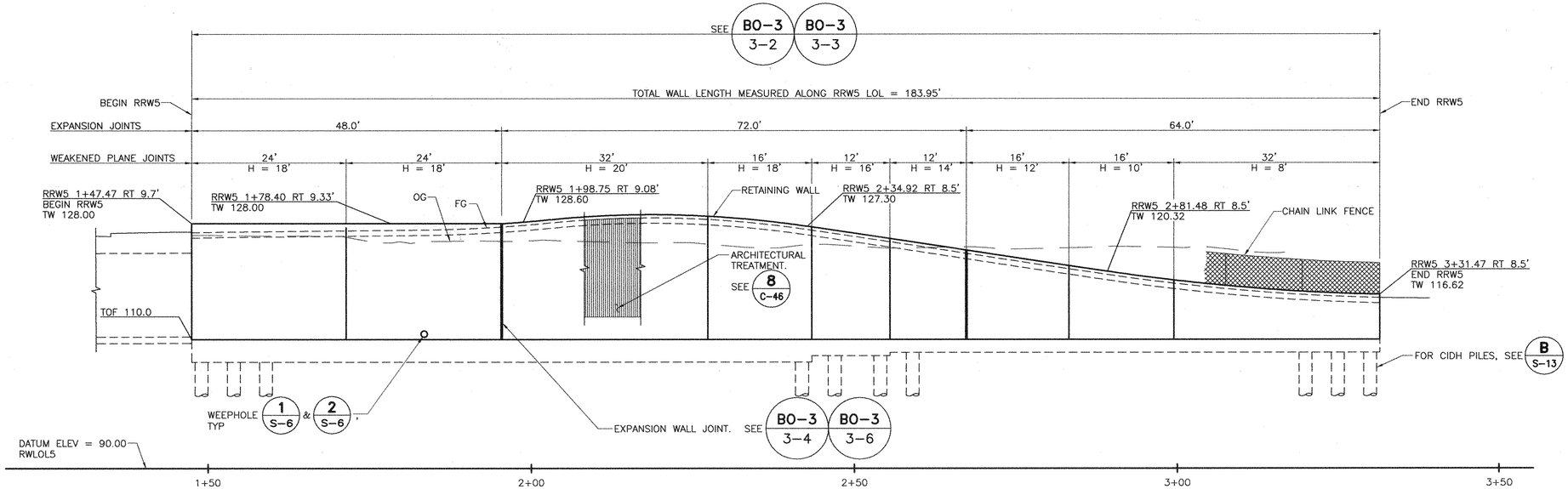

ELEVATION B
1" = 10'

NOTES:

1. "H" INDICATES RETAINED SOIL HEIGHT.
2. DISTANCES SHOWN ARE ALONG RWLOL.
3. FOR TOP OF WALL ELEVATIONS, ADDITIONAL LAYOUT AND PROFILE INFORMATION NOT SHOWN, SEE CIVIL PLANS.
4. TOP OF FOOTING PROFILES ARE LEVEL UNLESS NOTED OTHERWISE.

REV	DESCRIPTION	DATE	APPR.	REFERENCE INFORMATION AND NOTES

BIGGS CARDOSA ASSOCIATES INC
STRUCTURAL ENGINEERS
865 The Alameda
San Jose, California 95126
408-296-5515
BCA

DATE	05-18-10
DESIGN	D.L.L.
DRAWN	S.M.H.
CHECKED	A.P.N.

ENGINEERING CERTIFICATION
REGISTERED PROFESSIONAL ENGINEER — DAMIAN M. HARPER — No. 2639 — Exp. 12/31/10 — STRUCTURAL — STATE OF CALIFORNIA
PROJECT ENGINEER — DATE 5/18/10

Santa Clara Valley Water District
ACCEPTED BY DISTRICT
Dennis Cheung 6/1/10
PROJECT ENGINEER — DATE

PROJECT NAME AND SHEET DESCRIPTION:
LOWER SILVER CREEK REACHES 4, 5 & 6A
RAMP RETAINING WALL ELEVATIONS AT STORY ROAD

SCALE: AS SHOWN
VERIFY SCALES: 0 — 1"
BAR IS ONE INCH ON ORIGINAL DRAWING IF NOT ONE INCH ON THIS SHEET, ADJUST SCALES ACCORDINGLY

PROJECT NUMBER: 40264008
SHEET CODE: S-36
PAGE NUMBER: 120 OF 188

DOCUMENT NUMBER: CAD_XX-X-XXXX-XXXXX
FILENAME: W:\2001\2001093A\2001093AS36
4026-43111

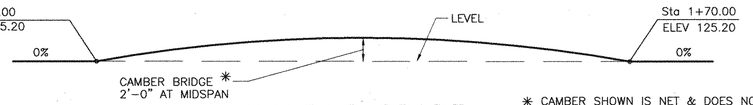

PROFILE GRADE

NO SCALE

* CAMBER SHOWN IS NET & DOES NOT INCLUDE ADDITIONAL CAMBER REQ'D TO COMPENSATE FOR DEAD LOAD DEFLECTION.

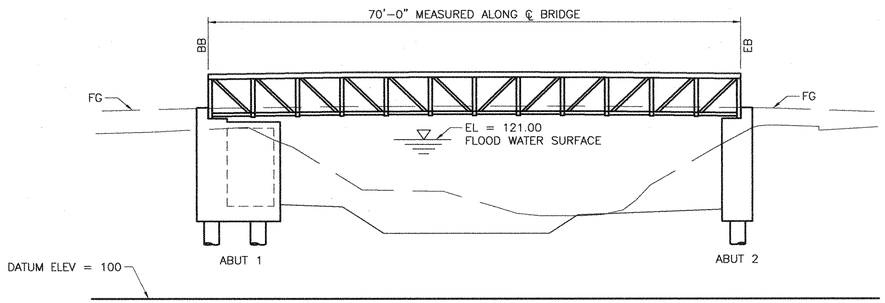

ELEVATION

SCALE: 1" = 10'

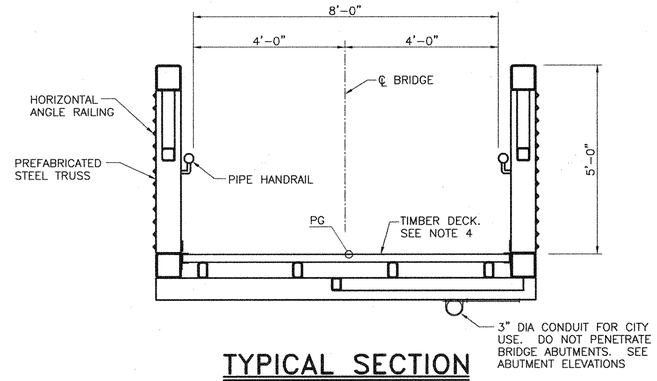

TYPICAL SECTION

SCALE: 1/2" = 1'-0'

PILE DATA – CIDH CONCRETE PILES			
LOCATION	DIAMETER	NOMINAL RESISTANCE COMPRESSION	SPECIFIED TIP ELEVATION
ABUT 1	30"	60 KIPS	+76.00
ABUT 2	30"	60 KIPS	+76.00

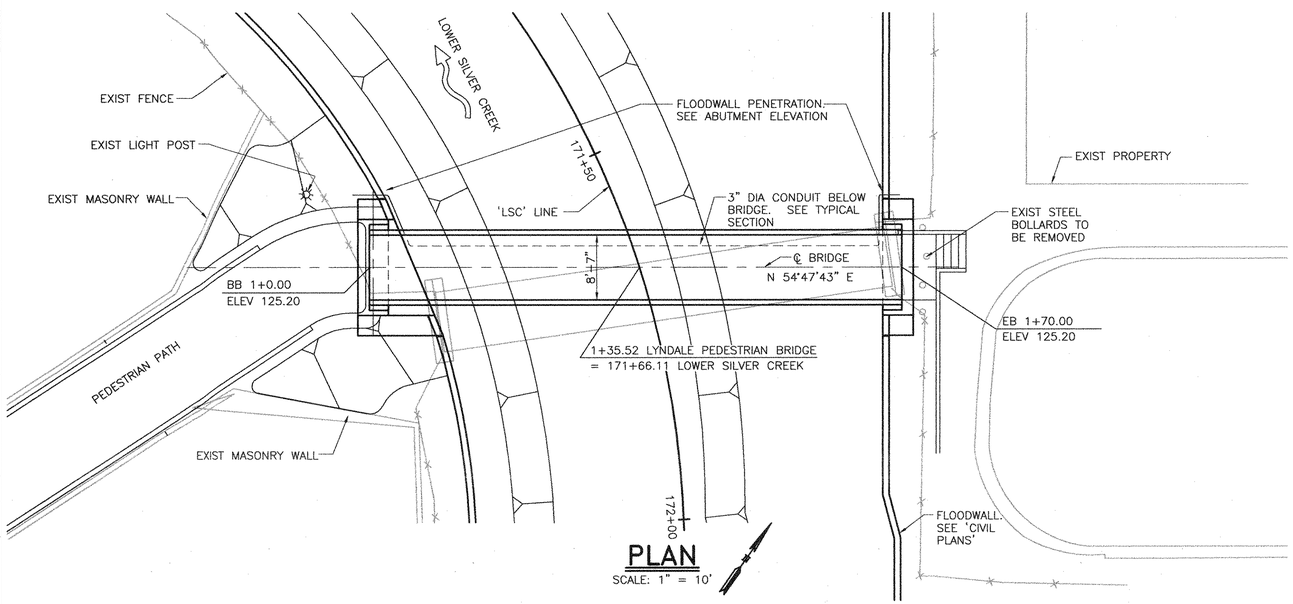

PLAN

SCALE: 1" = 10'

GENERAL NOTES

1. SEE S-1 FOR INDEX TO STANDARD PLANS DATED MAY 2006.
2. STRUCTURAL STEEL SHALL BE DESIGNED, DETAILED AND FABRICATED ACCORDING TO THE LATEST PROVISIONS OF THE 2007 CBC, AISC MANUAL OF STEEL CONST. AND THE STRUCTURAL WELDING CODE (ANSI/AWS D1.1-88).
3. BRIDGE MEMBERS ARE FABRICATED FROM HIGH STRENGTH, SELF-WEATHERING, LOW ALLOY, ATMOSPHERIC CORROSION RESISTANT ASTM A847 COLD-FORMED WELDED SQUARE AND RECTANGULAR TUBING AND ASTM A588, ASTM A606 OR ASTM A242 PLATE AND STRUCTURAL SHAPES (FY = 50,000 PSI)
4. BRIDGE DECKING TO BE NOMINAL 2x8 IPE HARDWOOD OR APPROVED EQUAL. TIMBER DECK MATERIAL SHALL BE SUPPLIED WITH THE END SEALED WITH "ANCHOR SEAL" MOBIL CER_M OR AN APPROVED EQUAL.
5. WELDING SHALL BE PERFORMED WITH SERIES E80 ELECTRODES AND COMPATIBLE WITH THE BASE METAL BEING WELDED.
6. ALL TOP AND BOTTOM CHORD SHOP SPLICES TO BE COMPLETE PENETRATION TYPE WELDS. WELD BETWEEN TOP CHORD AND END VERTICAL SHALL BE PARTIAL PENETRATION.
7. UNLESS OTHERWISE NOTED, WELDED CONNECTIONS SHALL BE FILLET WELDS (OR HAVE THE EFFECTIVE THROAT OF A FILLET WELD) OF A SIZE EQUAL TO THE THICKNESS OF THE LIGHTEST GAGE MEMBER IN THE CONNECTION. WELDS SHALL BE APPLIED AS FOLLOWS:
   a) BOTH ENDS OF VERTICALS, DIAGONALS, AND FLOOR BEAMS SHALL BE WELDED ALL AROUND.
   b) BRACE DIAGONALS WILL BE WELDED FOR FULL LENGTH OF TOP, BOTTOM AND OUTSIDE VERTICAL FACES.
   c) MISCELLANEOUS NON-STRUCTURAL MEMBERS WILL BE STITCH WELDED TO THEIR SUPPORTING MEMBERS.
8. SEE SHEET S-2 FOR BRIDGE DESIGN CRITERIA & LOADING CONDITIONS.
9. CONTRACTOR SHALL UTILIZE TEMPORARY CASINGS AT CIDH PILES IF EXCESSIVE GROUNDWATER IS ENCOUNTERED DURING DRILLING SO AS TO PRESERVE THE INTEGRITY OF THE PILE.
10. IF GROUNDWATER IS ENCOUNTERED DURING DRILLING, INSPECTION PIPES SHALL BE UTILIZED IN CIDH PILES PER (B / S-40).

REV	DESCRIPTION	DATE	APPR.	REFERENCE INFORMATION AND NOTES

BIGGS CARDOSA ASSOCIATES INC
STRUCTURAL ENGINEERS
865 The Alameda
San Jose, California 95126
408-296-5515

DATE 05-18-10
DESIGN D.L.L.
DRAWN S.M.H.
CHECKED A.P.N.

ENGINEERING CERTIFICATION
REGISTERED PROFESSIONAL ENGINEER MARVIN M. HARPER No. 2639 Exp. 12/31/10 STRUCTURAL STATE OF CALIFORNIA
5/18/10
PROJECT ENGINEER DATE

Santa Clara Valley Water District
ACCEPTED BY DISTRICT
Dennis Chiang 6/1/10
PROJECT ENGINEER DATE

PROJECT NAME AND SHEET DESCRIPTION:

LOWER SILVER CREEK REACHES 4, 5 & 6A

PLAN, ELEVATION AND SECTION LYNDALE PEDESTRIAN BRIDGE

SCALE: AS SHOWN
VERIFY SCALES 0 1"
BAR IS ONE INCH ON ORIGINAL DRAWING IF NOT ONE INCH ON THIS SHEET, ADJUST SCALES ACCORDINGLY

PROJECT NUMBER 40264008
SHEET CODE: S-37
PAGE NUMBER: 121 OF 188

DOCUMENT NUMBER: CAD_XX-X-XXXX-XXXXX
FILENAME: W:\2001\2001093A\20010934S37
4026 - 43/12

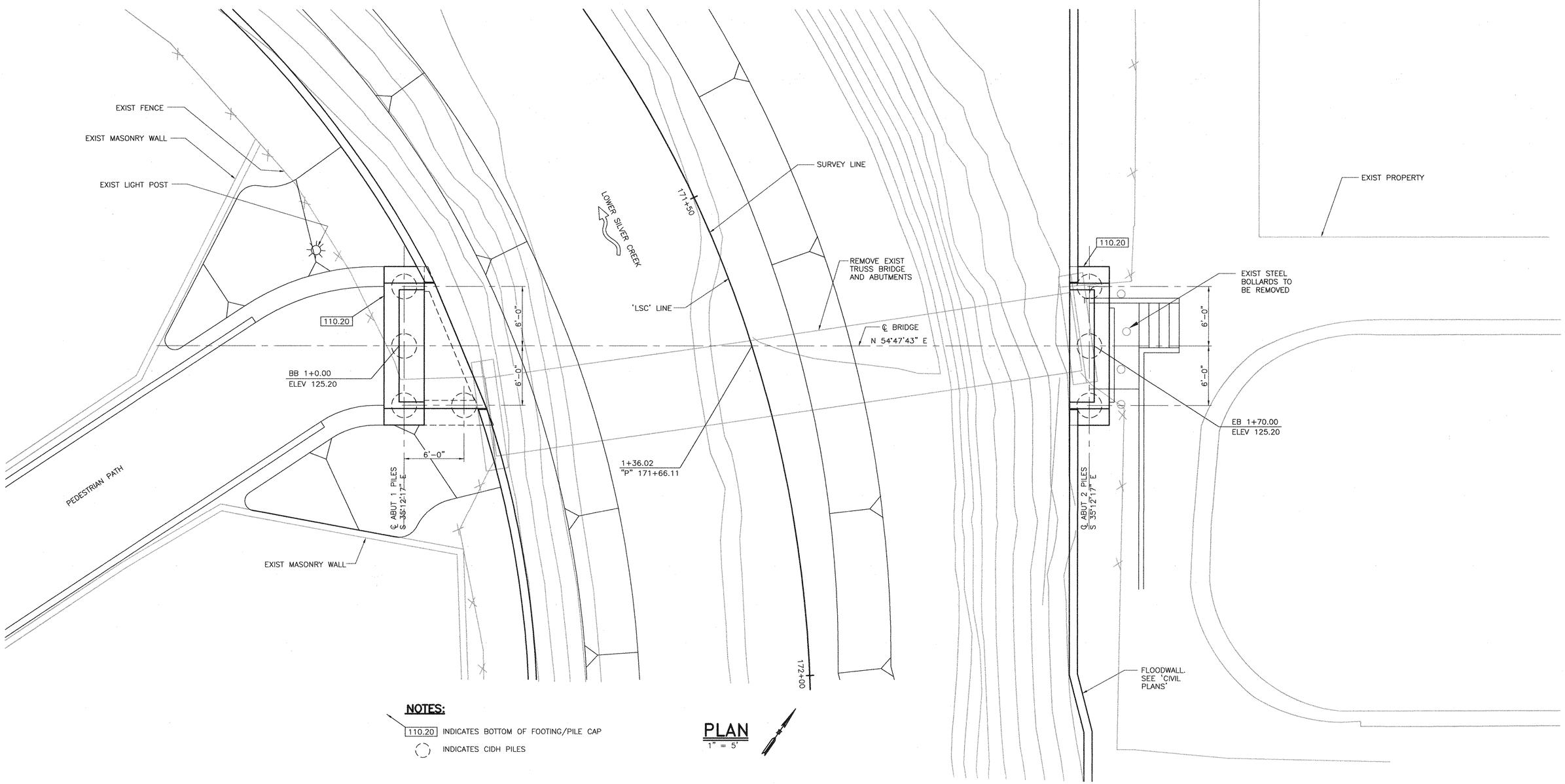

NOTES:

110.20 INDICATES BOTTOM OF FOOTING/PILE CAP

INDICATES CIDH PILES

PLAN

1" = 5'

REV	DESCRIPTION	DATE	APPR.	REFERENCE INFORMATION AND NOTES

BIGGS CARDOSA ASSOCIATES INC
STRUCTURAL ENGINEERS
865 The Alameda
San Jose, California 95126
408-296-5515
BCA

DATE	05-18-10
DESIGN	D.L.L.
DRAWN	J.J.D.
CHECKED	A.P.N.

ENGINEERING CERTIFICATION
REGISTERED PROFESSIONAL ENGINEER
ANTHONY P. NAVARRO
No. 2639
Exp. 12/31/10
STRUCTURAL
STATE OF CALIFORNIA
5/18/10
PROJECT ENGINEER DATE

Santa Clara Valley Water District

ACCEPTED BY DISTRICT
Dennis Chiang 6/1/10
PROJECT ENGINEER DATE

PROJECT NAME AND SHEET DESCRIPTION:

LOWER SILVER CREEK REACHES 4, 5 & 6A

FOUNDATION PLAN
LYNDALE PEDESTRIAN BRIDGE

SCALE: AS SHOWN

VERIFY SCALES: 0 — 1"
BAR IS ONE INCH ON ORIGINAL DRAWING
IF NOT ONE INCH ON THIS SHEET, ADJUST SCALES ACCORDINGLY

PROJECT NUMBER: 40264008

SHEET CODE: S-38

PAGE NUMBER: 122 OF 188

DOCUMENT NUMBER: CAD_XX-X-XXXX-XXXXX

FILENAME: W:\2001\2001093A\2001093AS38

4026 - 43113

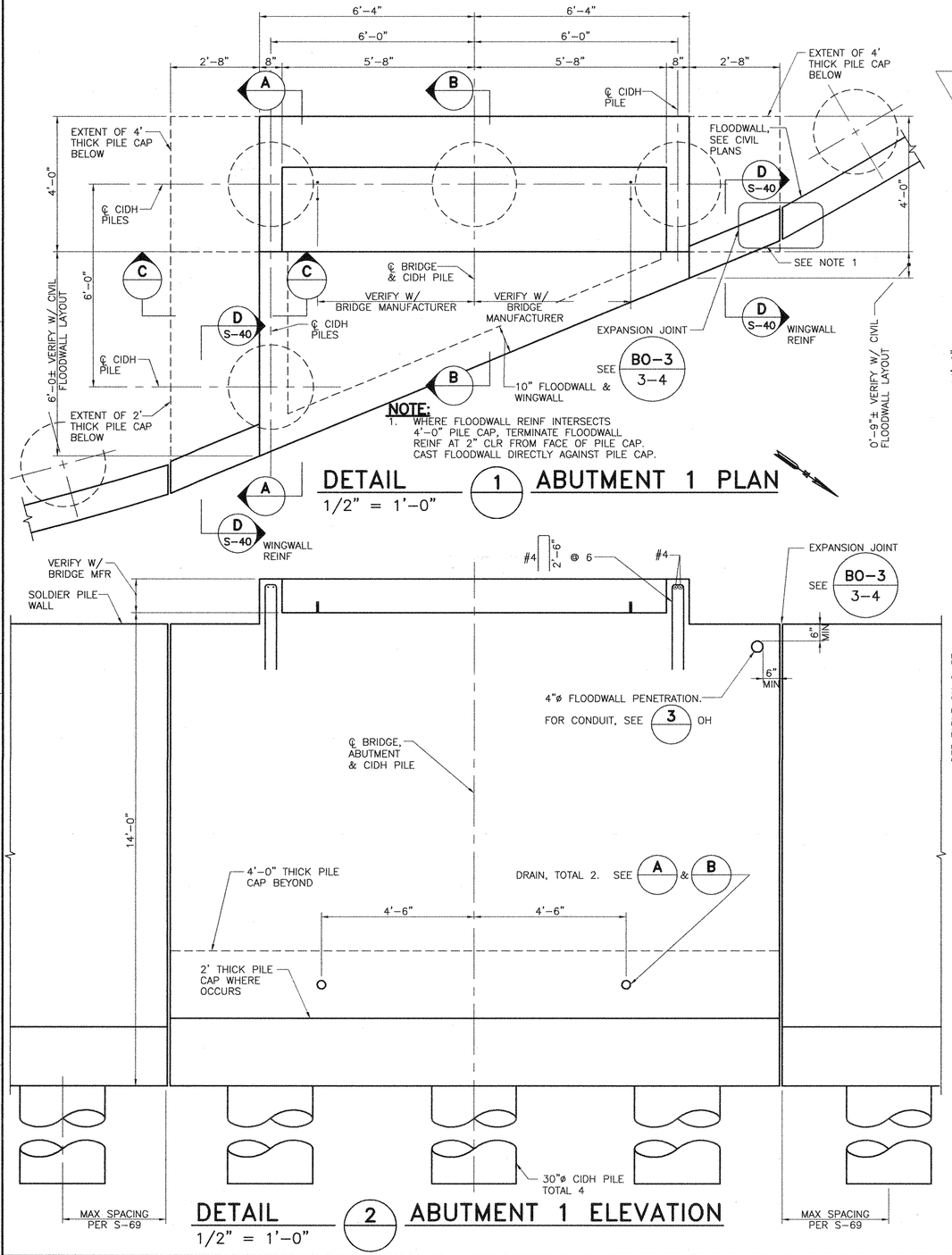

NOTE:
1. WHERE FLOODWALL REINF INTERSECTS 4'-0" PILE CAP, TERMINATE FLOODWALL REINF AT 2" CLR FROM FACE OF PILE CAP. CAST FLOODWALL DIRECTLY AGAINST PILE CAP.

DETAIL 1 ABUTMENT 1 PLAN
1/2" = 1'-0"

DETAIL 2 ABUTMENT 1 ELEVATION
1/2" = 1'-0"

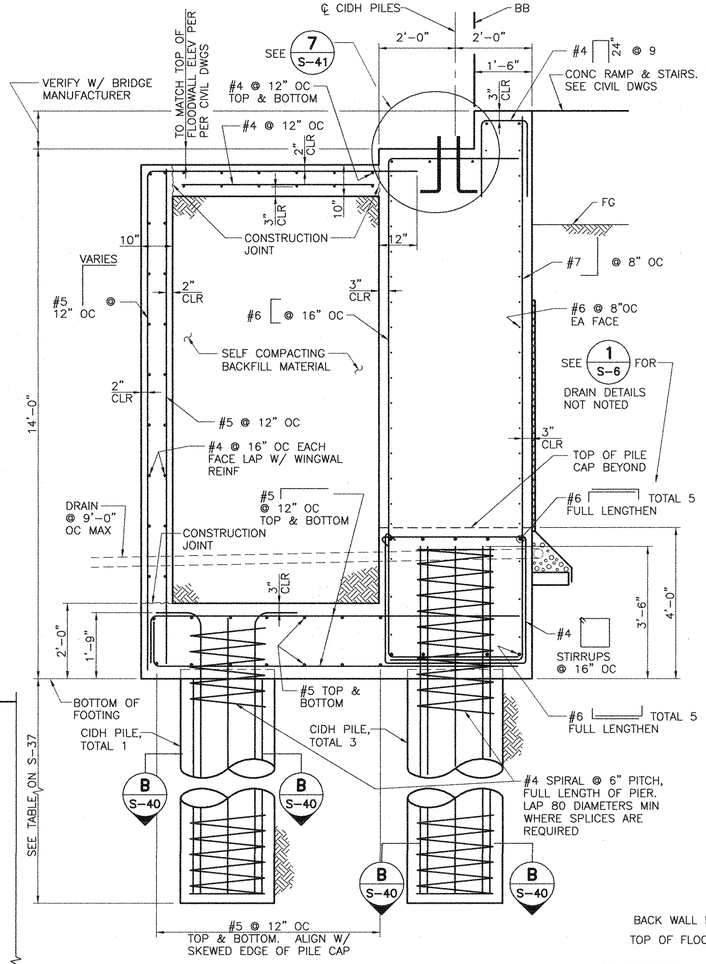

SECTION A
1/2" = 1'-0"

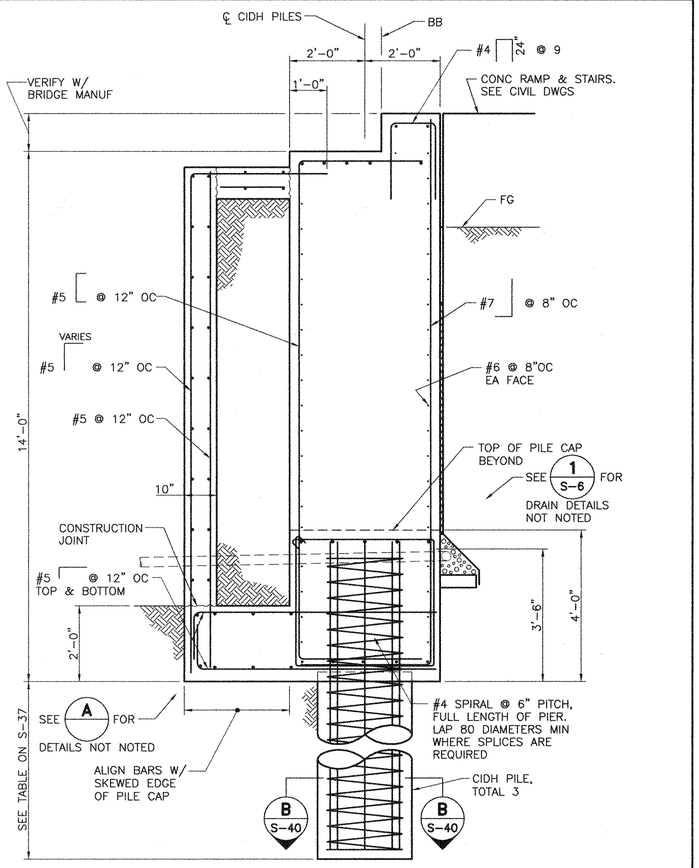

SECTION B
1/2" = 1'-0"

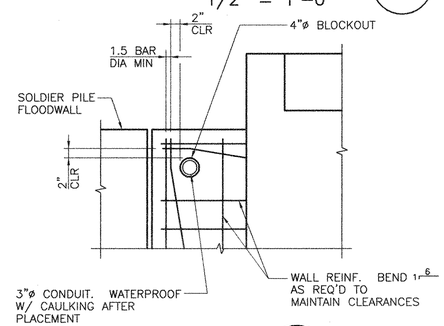

DETAIL 3
3/4" = 1'-0"

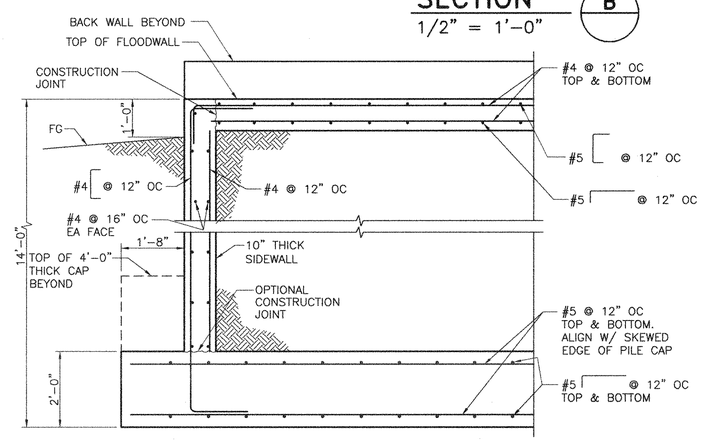

SECTION C
1/2" = 1'-0"

REV	DESCRIPTION	DATE	APPR.	REFERENCE INFORMATION AND NOTES

BIGGS CARDOSA ASSOCIATES INC
STRUCTURAL ENGINEERS
865 The Alameda
San Jose, California 95126
408-296-5515

DATE	05-18-10
DESIGN	D.L.L.
DRAWN	S.M.H.
CHECKED	A.P.N.

ENGINEERING CERTIFICATION
REGISTERED PROFESSIONAL ENGINEER — JAMES M. HARRIS — No. 2639 — Exp. 12/31/10 — STRUCTURAL — STATE OF CALIFORNIA
PROJECT ENGINEER — DATE 5/18/10

Santa Clara Valley Water District
ACCEPTED BY DISTRICT
Dennis Chong — 6/1/10
PROJECT ENGINEER — DATE

PROJECT NAME AND SHEET DESCRIPTION:
LOWER SILVER CREEK REACHES 4, 5 & 6A
ABUTMENT PLAN, ELEVATIONS & SECTIONS LYNDALE PEDESTRAIAN BRIDGE

SCALE: AS SHOWN
VERIFY SCALES: 0 — 1"
BAR IS ONE INCH ON ORIGINAL DRAWING IF NOT ONE INCH ON THIS SHEET, ADJUST SCALES ACCORDINGLY

PROJECT NUMBER: 40264008
SHEET CODE: S-39
PAGE NUMBER: 123 OF 188

DOCUMENT NUMBER: CAD_XX-X-XXXX-XXXXX
FILENAME: W:\2001\2001093A\2001093AS39
Y026 - 93/4

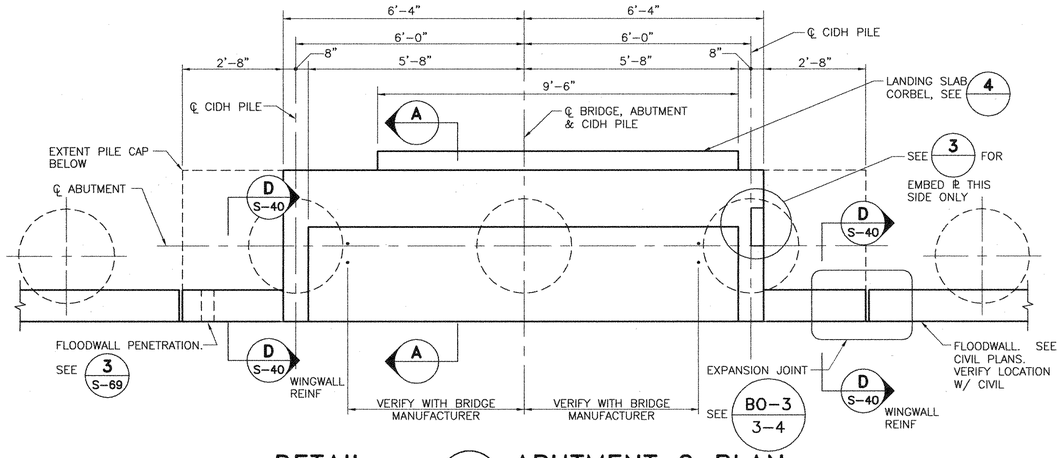

DETAIL 1 ABUTMENT 2 PLAN
1/2" = 1'-0"

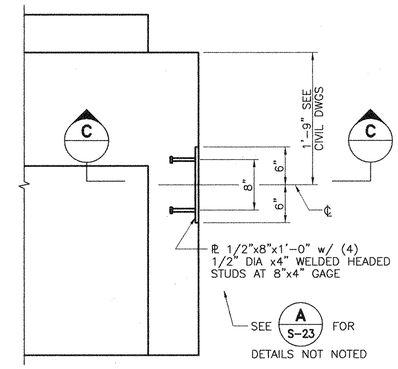

DETAIL 3
1" = 1'-0"

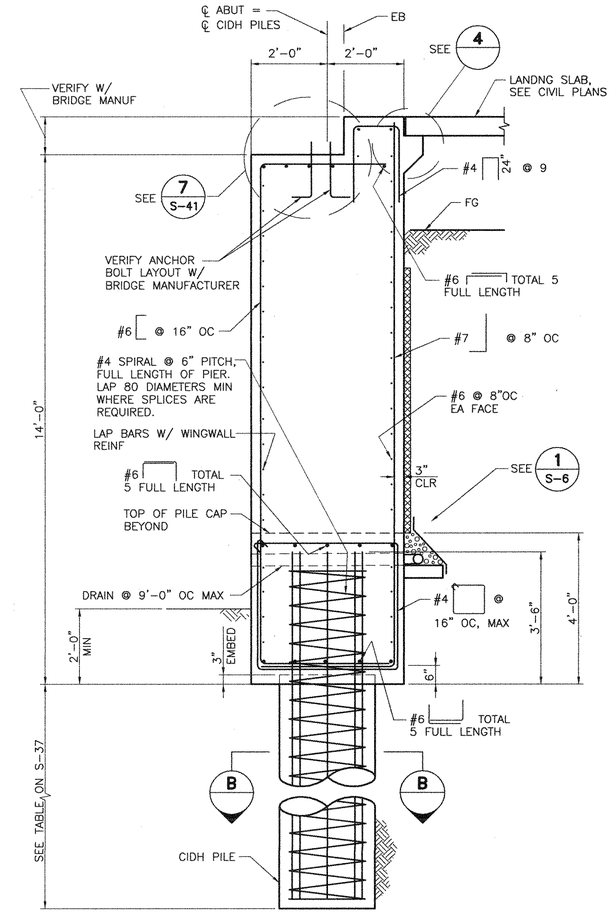

SECTION A
1/2" = 1'-0"

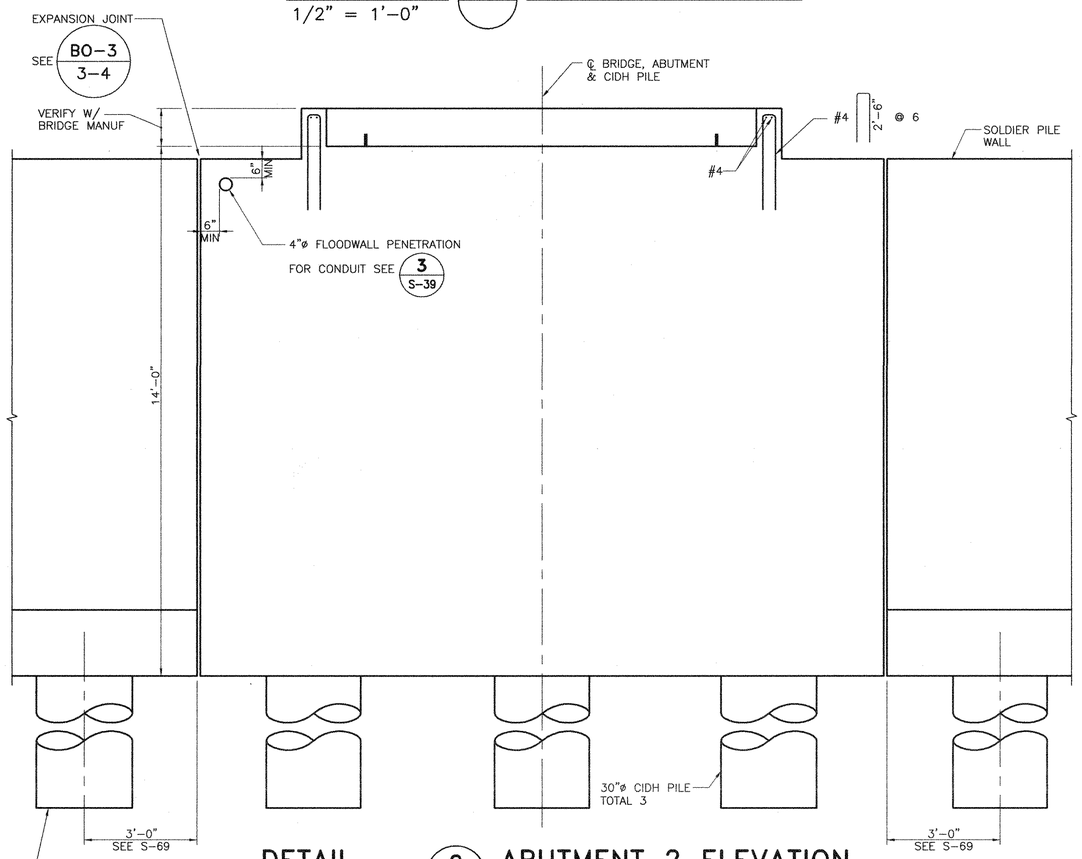

DETAIL 2 ABUTMENT 2 ELEVATION
1/2" = 1'-0"

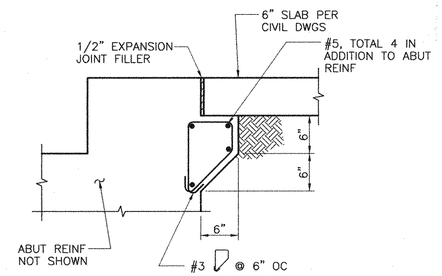

DETAIL 4 CORBEL
1" = 1'-0"

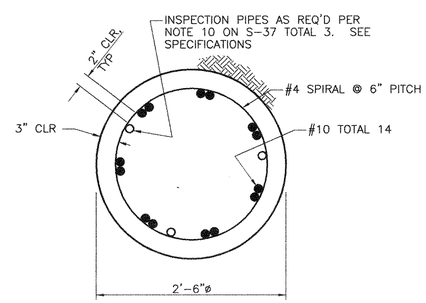

SECTION B
1" = 1'-0"

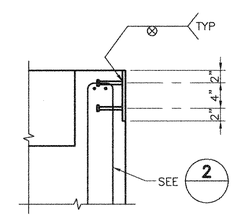

SECTION C
1" = 1'-0"

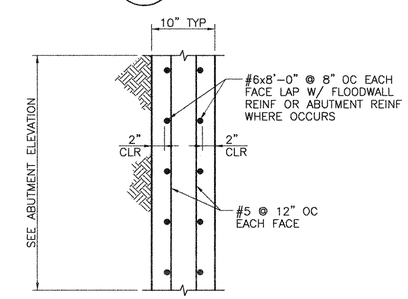

SECTION D
1" = 1'-0"

REV	DESCRIPTION	DATE	APPR.	REFERENCE INFORMATION AND NOTES

BIGGS CARDOSA ASSOCIATES INC
STRUCTURAL ENGINEERS
865 The Alameda
San Jose, California 95126
408-296-5515
BCA

DATE	
05-18-10	
DESIGN	D.L.L.
DRAWN	S.M.H.
CHECKED	A.P.N.

ENGINEERING CERTIFICATION
REGISTERED PROFESSIONAL ENGINEER ANTHONY M. HARTNAGEL No. 2639 Exp. 12/31/10 STRUCTURAL STATE OF CALIFORNIA
5/18/10
PROJECT ENGINEER DATE

Santa Clara Valley Water District
ACCEPTED BY DISTRICT
Dennis Cheung 6/1/10
PROJECT ENGINEER DATE

PROJECT NAME AND SHEET DESCRIPTION:
LOWER SILVER CREEK REACHES 4, 5 & 6A
ABUTMENT PLAN, ELEVATIONS & SECTIONS LYNDALE PEDESTRIAN BRIDGE

SCALE: AS SHOWN
VERIFY SCALES: 0 — 1"
BAR IS ONE INCH ON ORIGINAL DRAWING IF NOT ONE INCH ON THIS SHEET, ADJUST SCALES ACCORDINGLY

PROJECT NUMBER: 40264008
SHEET CODE: S-40
PAGE NUMBER: 124 OF 188

DOCUMENT NUMBER: CAD_XX-X-XXXX-XXXXX 4026 - 43/15
FILENAME: W:\2001\2001093A\2001093AS40

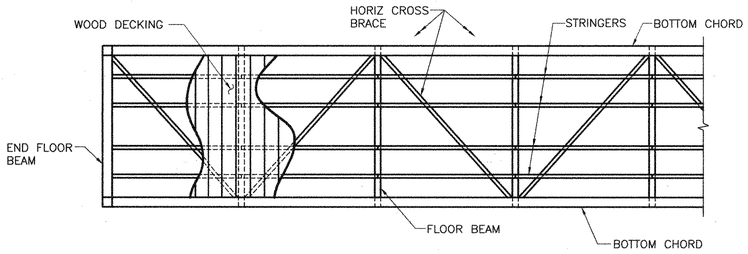

DETAIL 1 BRIDGE PLAN
3/8" = 1'-0"

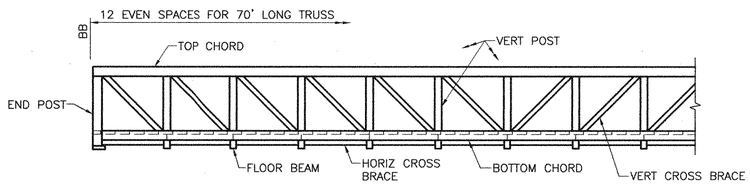

(CABLE SAFETY RAILING & PIPE HANDRAIL RAILING NOT SHOWN)

DETAIL 2 ELEVATION
3/8" = 1'-0"

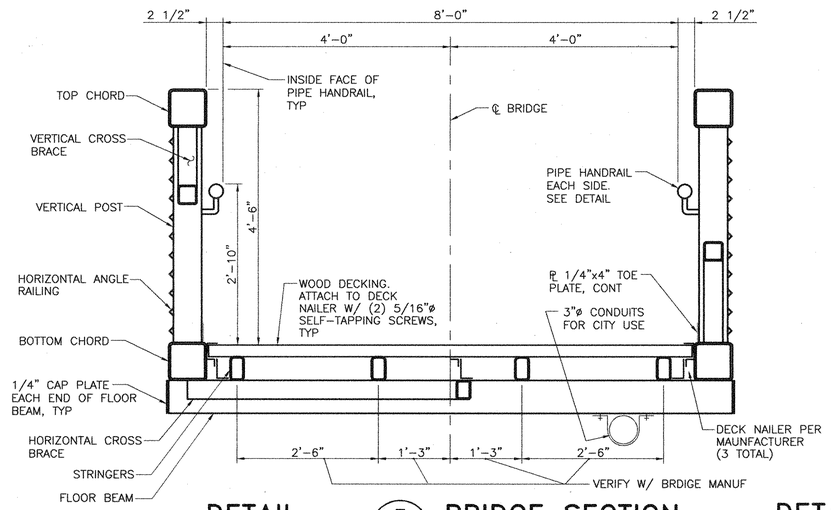

DETAIL 3 BRIDGE SECTION
3/4" = 1'-0"

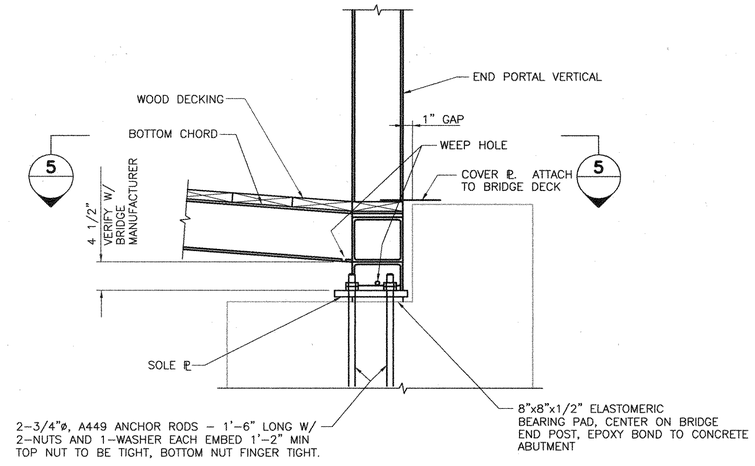

DETAIL 4 SIDE VIEW-EXPANSION BEARING ASSEMBLY
NO SCALE

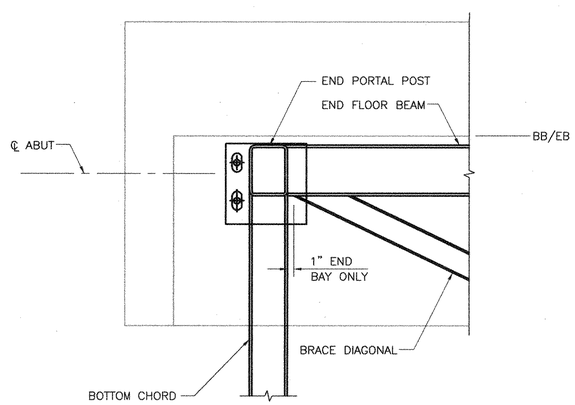

DETAIL 5 PLAN-BEARING ASSEMBLIES
1/2" = 1'-0"

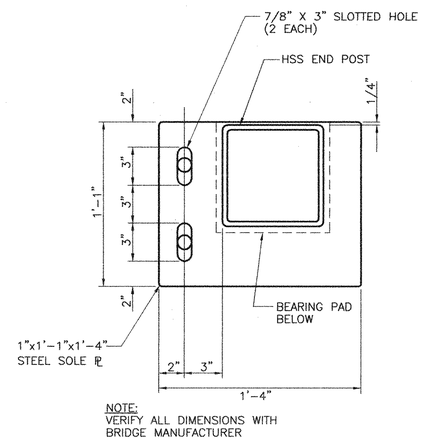

NOTE:
VERIFY ALL DIMENSIONS WITH BRIDGE MANUFACTURER

DETAIL 6 ANCHOR PLATE
NO SCALE

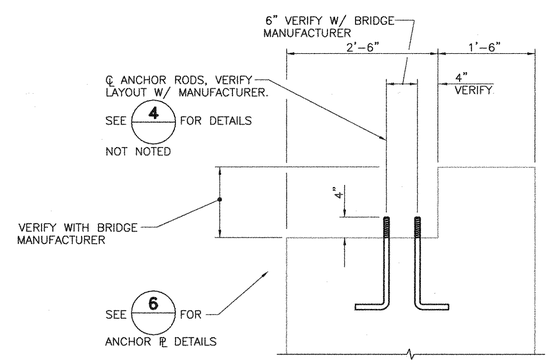

DETAIL 7
NO SCALE

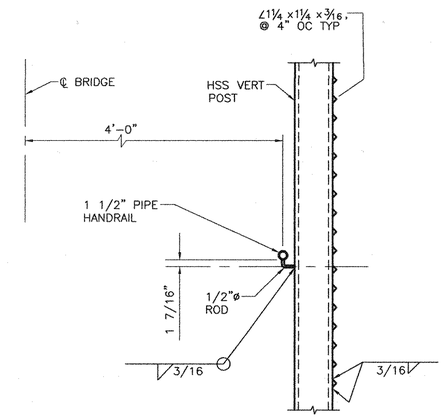

DETAIL 8 PIPE HANDRAIL
NO SCALE

REV	DESCRIPTION	DATE	APPR.	REFERENCE INFORMATION AND NOTES

BIGGS CARDOSA ASSOCIATES INC
STRUCTURAL ENGINEERS
865 The Alameda
San Jose, California 95126
408-296-5515
BCA

DATE	ENGINEERING CERTIFICATION
05-18-10	REGISTERED PROFESSIONAL ENGINEER DARWIN M. HARDER No. 2639 Exp. 12/31/10 STRUCTURAL STATE OF CALIFORNIA 5/18/10
DESIGN D.L.L.	PROJECT ENGINEER DATE
DRAWN S.M.H.	
CHECKED A.P.N.	

Santa Clara Valley Water District
ACCEPTED BY DISTRICT
Dennis Chiang 6/1/10
PROJECT ENGINEER DATE

PROJECT NAME AND SHEET DESCRIPTION:
LOWER SILVER CREEK REACHES 4, 5 & 6A
LYNDALE PEDESTRIAN BRIDGE TYPICAL DETAILS

SCALE: AS SHOWN
VERIFY SCALES: 0 1"
BAR IS ONE INCH ON ORIGINAL DRAWING IF NOT ONE INCH ON THIS SHEET, ADJUST SCALES ACCORDINGLY

PROJECT NUMBER: 40264008
SHEET CODE: S-41
PAGE NUMBER: 125 OF 188

DOCUMENT NUMBER: CAD_XX-X-XXXX-XXXXX
FILENAME: W:\2001\2001093A\2001093AS41
4026-Y3/16

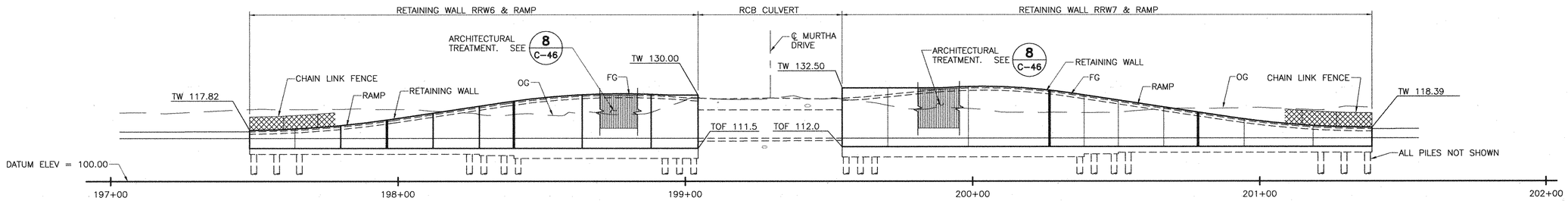

DEVELOPED RAMP WALL ELEVATION

SCALE: 1" = 20'

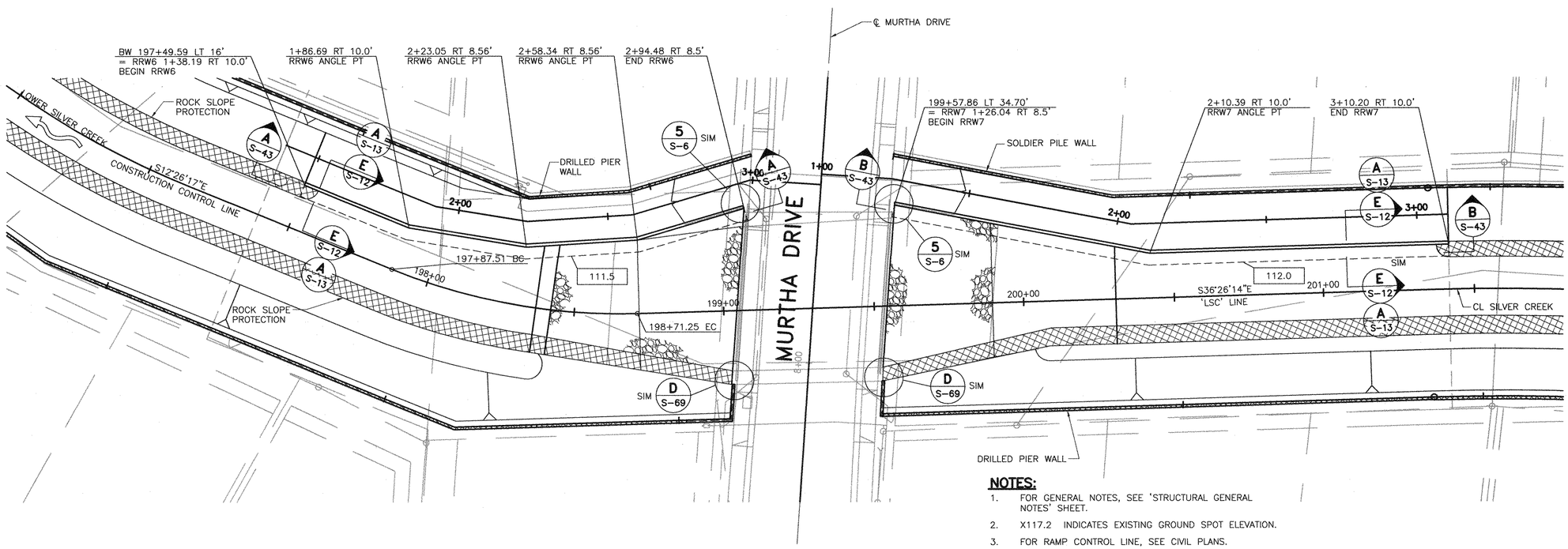

PLAN

SCALE: 1" = 20'

NOTES:

1. FOR GENERAL NOTES, SEE 'STRUCTURAL GENERAL NOTES' SHEET.
2. X117.2 INDICATES EXISTING GROUND SPOT ELEVATION.
3. FOR RAMP CONTROL LINE, SEE CIVIL PLANS.

LEGEND:

—— G ——	INDICATES EXISTING GAS LINE
— — — E(OH) —	INDICATES EXISTING OVERHEAD ELECTRIC LINE
	INDICATES EXISTING RCB CULVERT, SEE CIVIL PLANS
112.0	INDICATES TOP OF FOOTING ELEVATION

REV	DESCRIPTION	DATE	APPR.	REFERENCE INFORMATION AND NOTES

BIGGS CARDOSA ASSOCIATES INC
STRUCTURAL ENGINEERS
865 The Alameda
San Jose, California 95126
408-296-5515

DATE	05-18-10
DESIGN	D.L.L.
DRAWN	S.M.H.
CHECKED	A.P.N.

ENGINEERING CERTIFICATION
REGISTERED PROFESSIONAL ENGINEER — DENNIS L. HARRIS — No. 2639 — Exp. 12/31/10 — STRUCTURAL — STATE OF CALIFORNIA
PROJECT ENGINEER — DATE 5/18/10

Santa Clara Valley Water District
ACCEPTED BY DISTRICT
Dennis Chang 6/1/10
PROJECT ENGINEER — DATE

PROJECT NAME AND SHEET DESCRIPTION:

LOWER SILVER CREEK REACHES 4, 5 & 6A

CULVERT APRON AND RAMP PLAN & SECTION AT MURTHA DRIVE

SCALE: AS SHOWN
VERIFY SCALES: 0 — 1" BAR IS ONE INCH ON ORIGINAL DRAWING IF NOT ONE INCH ON THIS SHEET, ADJUST SCALES ACCORDINGLY

PROJECT NUMBER: 40264008
SHEET CODE: S-42
PAGE NUMBER: 126 OF 188

DOCUMENT NUMBER: CAD_XX-X-XXXX-XXXXX
FILENAME: W:\2001\2001093A\2001093AS42
4026 - 43117

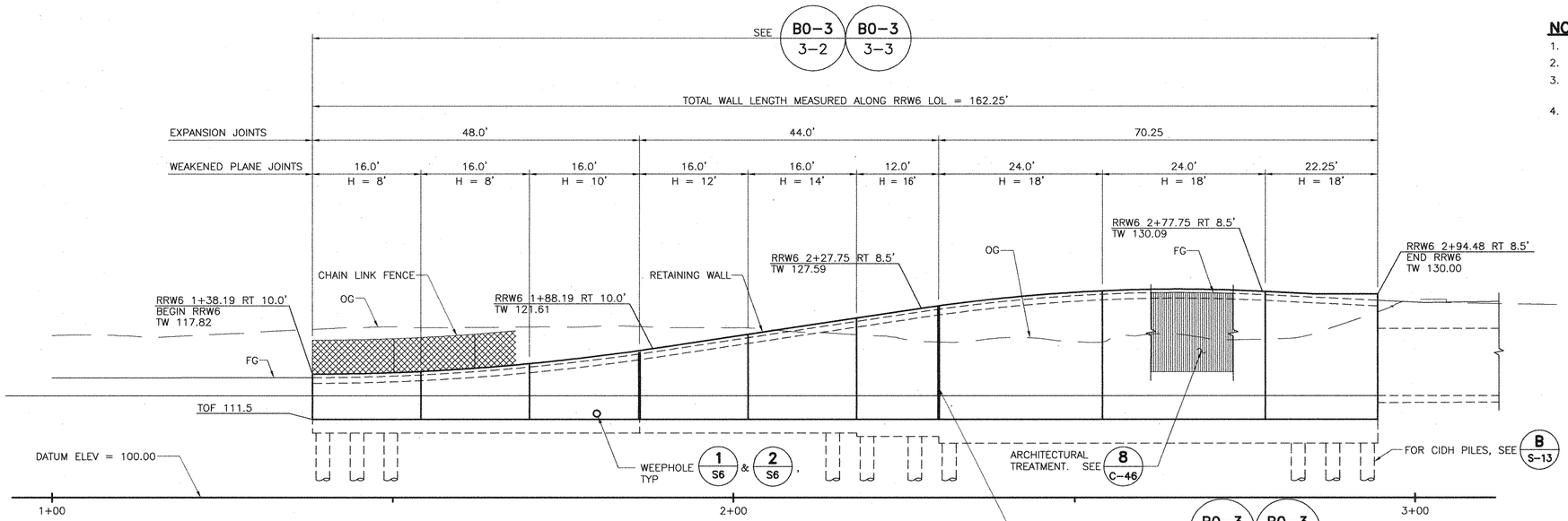

ELEVATION A
1" = 10'

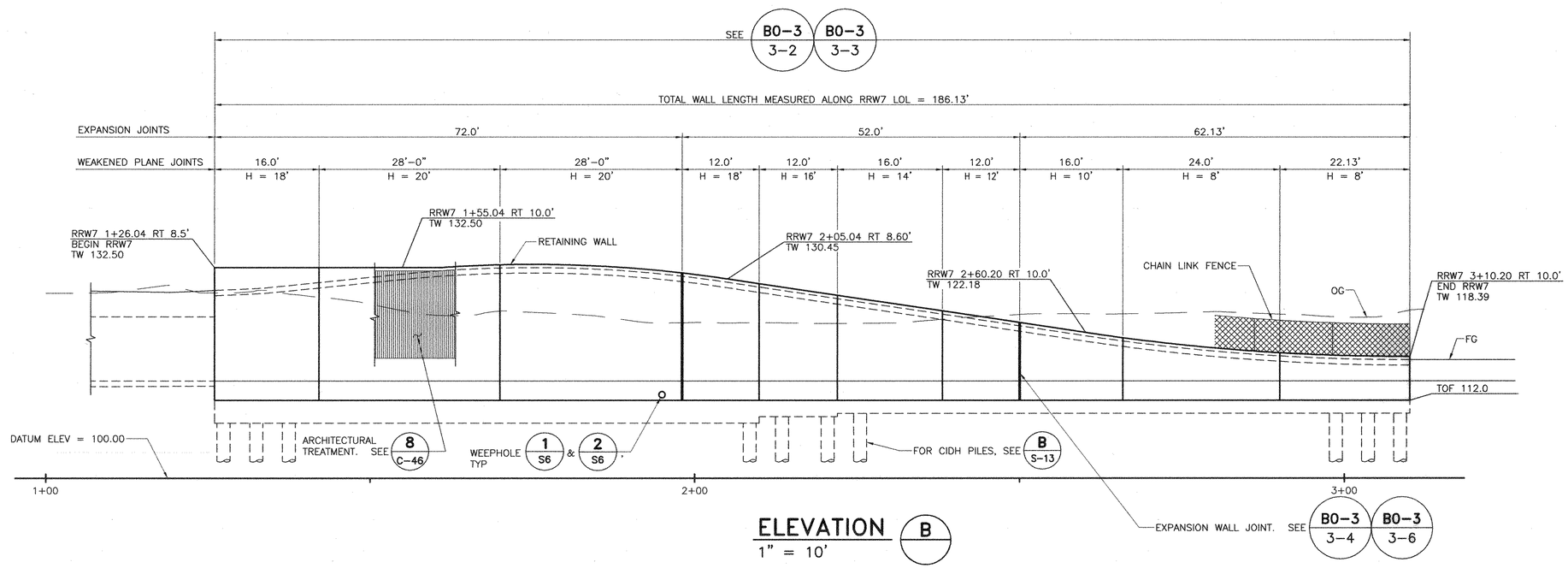

ELEVATION B
1" = 10'

NOTES:

1. "H" INDICATES RETAINED SOIL HEIGHT.
2. DISTANCES SHOWN ARE ALONG RWLOL.
3. FOR TOP OF WALL ELEVATIONS, ADDITIONAL LAYOUT AND PROFILE INFORMATION NOT SHOWN, SEE CIVIL PLANS.
4. TOP OF FOOTING PROFILES ARE LEVEL UNLESS NOTED OTHERWISE.

REV	DESCRIPTION	DATE	APPR.	REFERENCE INFORMATION AND NOTES

BIGGS CARDOSA ASSOCIATES INC
STRUCTURAL ENGINEERS
865 The Alameda
San Jose, California 95126
408-296-5515

DATE	05-18-10
DESIGN	D.L.L.
DRAWN	S.M.H.
CHECKED	A.P.N.

ENGINEERING CERTIFICATION
REGISTERED PROFESSIONAL ENGINEER — AMANDEEP M. HARPAL — No. 2639 — Exp. 12/31/10 — STRUCTURAL — STATE OF CALIFORNIA
PROJECT ENGINEER — DATE 5/18/10

Santa Clara Valley Water District
ACCEPTED BY DISTRICT
Dennis Cheong 6/1/10
PROJECT ENGINEER — DATE

PROJECT NAME AND SHEET DESCRIPTION:
LOWER SILVER CREEK REACHES 4, 5 & 6A
RAMP RETAINING WALL ELEVATIONS AT MURTHA DRIVE

SCALE: AS SHOWN
VERIFY SCALES: 0 — 1"
BAR IS ONE INCH ON ORIGINAL DRAWING IF NOT ONE INCH ON THIS SHEET, ADJUST SCALES ACCORDINGLY

PROJECT NUMBER: 40264008
SHEET CODE: S-43
PAGE NUMBER: 127 OF 188

DOCUMENT NUMBER: CAD_XX-X-XXXX-XXXXX
FILENAME: W:\2001\2001093A\2001093AS43
4026 - 43/18

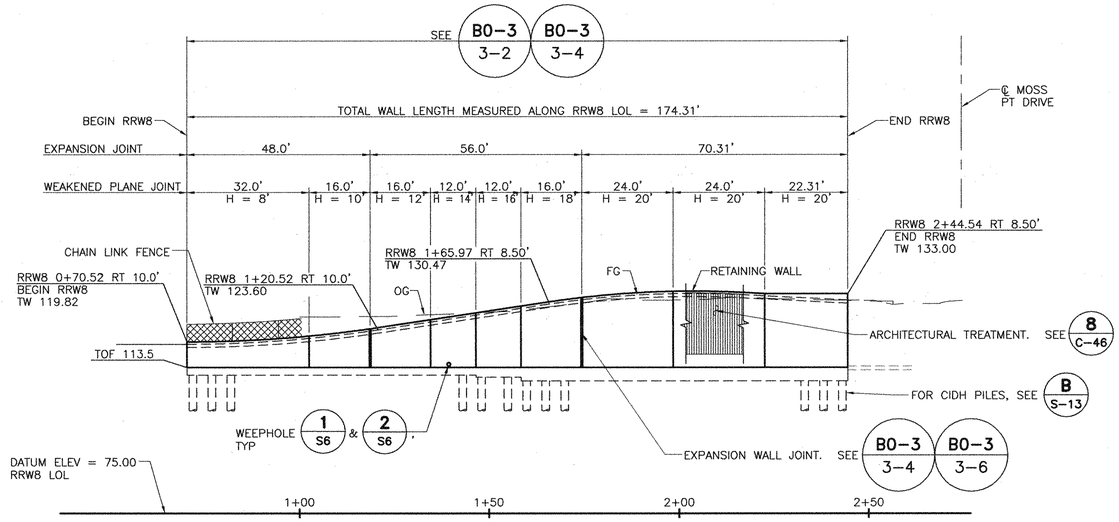

DEVELOPED RAMP WALL ELEVATION

SCALE: 1" = 20'

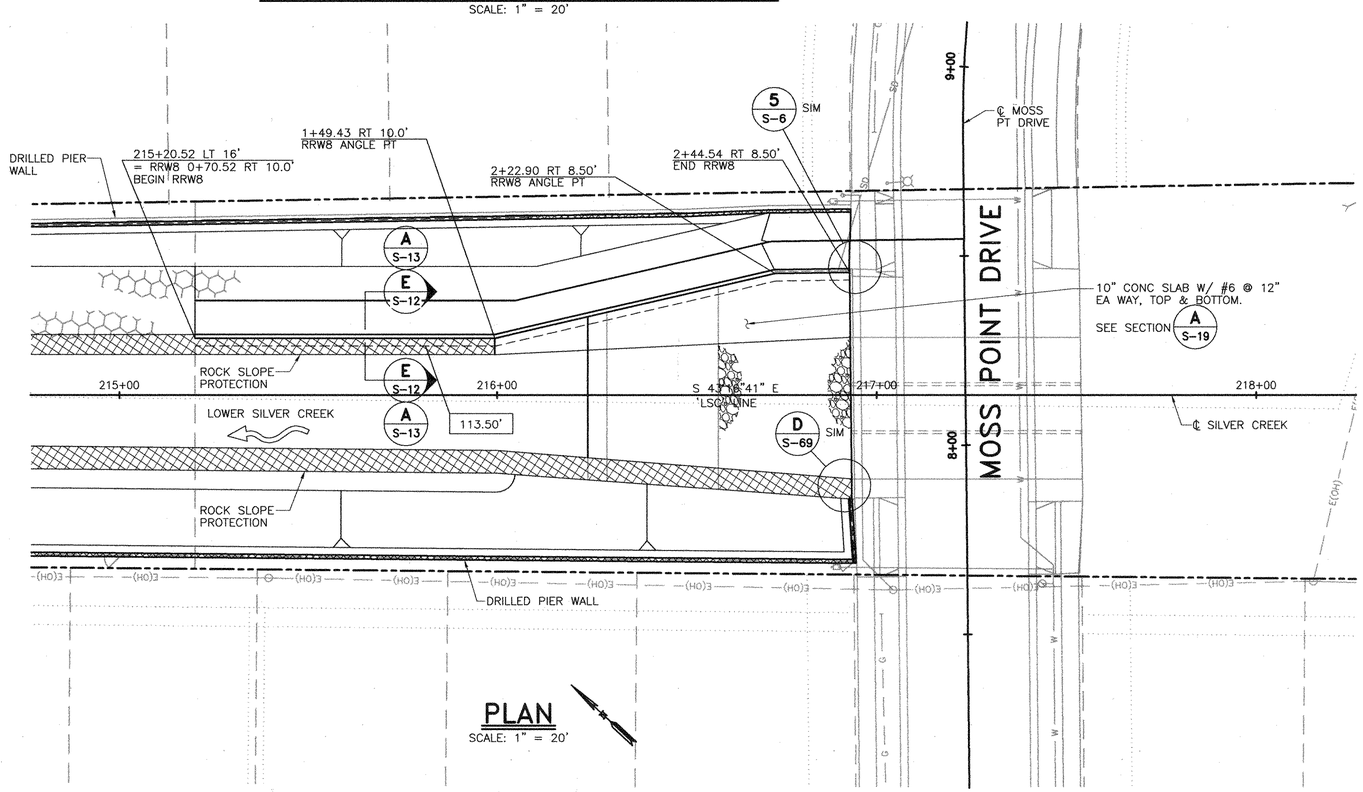

PLAN

SCALE: 1" = 20'

NOTES:

1. "H" INDICATES RETAINED SOIL HEIGHT.
2. DISTANCES SHOWN ARE ALONG RWLOL.
3. FOR TOP OF WALL ELEVATIONS, ADDITIONAL LAYOUT AND PROFILE INFORMATION NOT SHOWN, SEE CIVIL PLANS.
4. TOP OF FOOTING PROFILES ARE LEVEL UNLESS NOTED OTHERWISE.
5. FOR RAMP CONTROL LINE, SEE CIVIL PLANS.
6. X 107.2 INDICATES EXISTING GROUND SPOT ELEVATIONS.
7. FOR GENERAL NOTES, SEE SHEETS S-1 AND S-2.

LEGEND:

91.5' — INDICATES TOP OF FOOTING ELEVATION

REV	DESCRIPTION	DATE	APPR.	REFERENCE INFORMATION AND NOTES

BIGGS CARDOSA ASSOCIATES INC
STRUCTURAL ENGINEERS
865 The Alameda
San Jose, California 95126
408-296-5515
BCA

DATE	05-18-10
DESIGN	D.L.L.
DRAWN	S.M.H.
CHECKED	
A.P.N.	

ENGINEERING CERTIFICATION
REGISTERED PROFESSIONAL ENGINEER MARSH M HARRINGER No. 2639 Exp. 12/31/10 STRUCTURAL STATE OF CALIFORNIA
5/18/10
PROJECT ENGINEER DATE

Santa Clara Valley Water District
ACCEPTED BY DISTRICT
Dennis Cheong 6/1/10
PROJECT ENGINEER DATE

PROJECT NAME AND SHEET DESCRIPTION:

LOWER SILVER CREEK REACHES 4, 5 & 6A

CULVERT APRON AND RAMP PLAN & SECTION AT MOSS POINT DRIVE

SCALE: AS SHOWN
VERIFY SCALES 0 1" BAR IS ONE INCH ON ORIGINAL DRAWING IF NOT ONE INCH ON THIS SHEET, ADJUST SCALES ACCORDINGLY

PROJECT NUMBER: 40264008
SHEET CODE: S-44
PAGE NUMBER: 128 OF 188

DOCUMENT NUMBER: CAD_XX-X-XXXX-XXXXX
FILENAME: W:\2001\2001093A\2001093AS44
9026 - 9/3/19

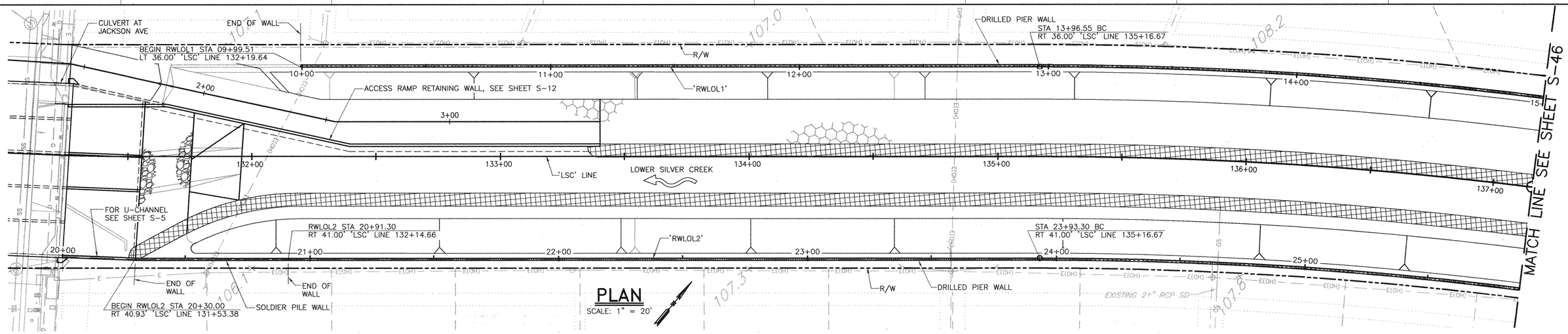

PLAN

SCALE: 1" = 20'

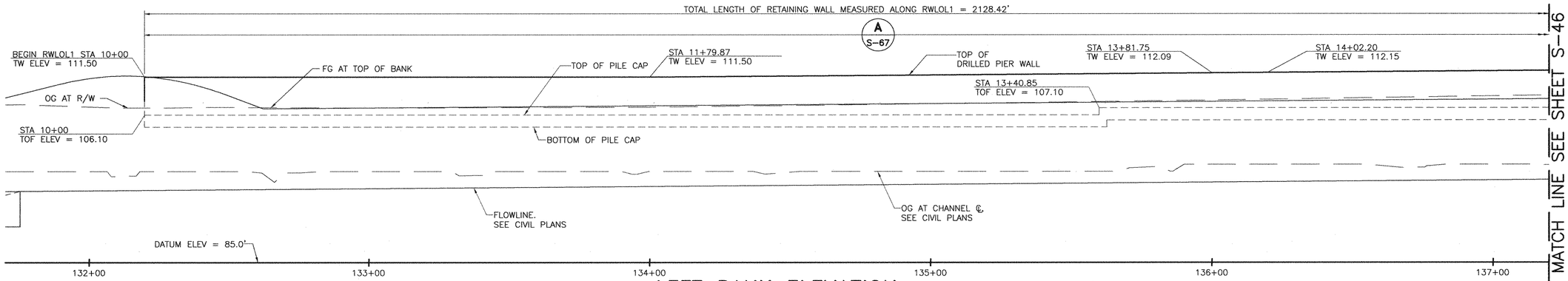

LEFT BANK ELEVATION

HORIZ SCALE: 1" = 20'
VERT SCALE: 1" = 8'

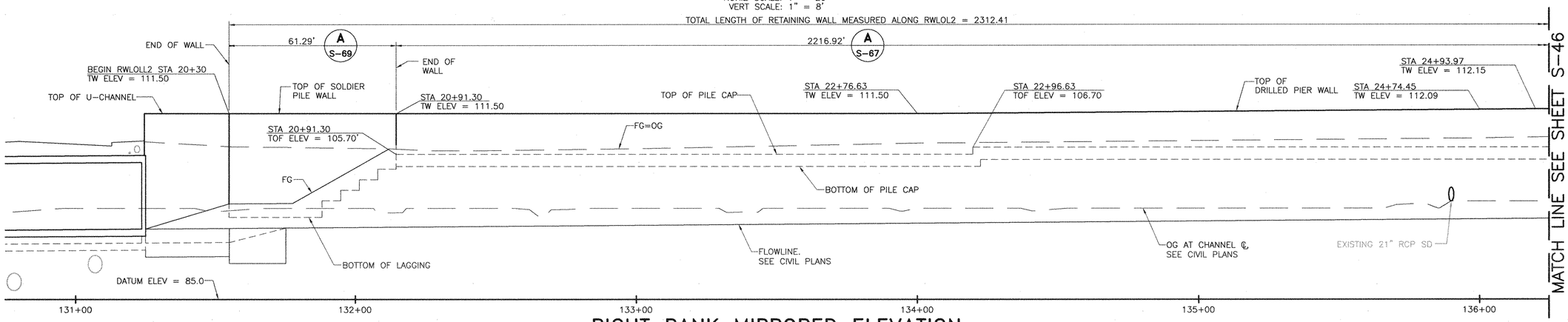

RIGHT BANK MIRRORED ELEVATION

HORIZ SCALE: 1" = 20'
VERT SCALE: 1" = 8'

NOTES:

1. FOR DRILLED PIER WALL DETAIL SHEETS, SEE S-67 & S-70.
2. FOR SOLDIER PILE WALL DETAIL SHEETS, SEE S-68, S-70 & S-71.
3. SEE CIVIL PLANS FOR EXISTING UTILITY SIZES, LOCATIONS & ELEVATIONS.
4. FOR PIPE PENETRATIONS AT DRILLED PIER OR SOLDIER PILE WALLS, SEE SHEET S-71
5. LEFT AND RIGHT BANK ELEVATIONS ARE PROJECTED FROM THE 'LSC' LINE. HORIZONTAL DIMENSIONS ON ELEVATIONS SHOULD NOT BE SCALED.
6. FOR ADDITIONAL LAYOUT AND PROFILE INFORMATION NOT NOTED, SEE 'CIVIL PLANS'.
7. TOP OF WALL PROFILES ARE LINEAR BETWEEN POINTS SHOWN UNLESS NOTED OTHERWISE.
8. TOP AND BOTTOM OF PILE CAP ARE LEVEL BETWEEN ELEVATION POINTS SHOWN UNLESS NOTED OTHERWISE
9. CONTRACTOR SHALL VERIFY AND ADJUST PILE CAP ELEVATIONS TO MAINTAIN MINIMUM DEPTH PER DETAIL 2 S-67

REV	DESCRIPTION	DATE	APPR.	REFERENCE INFORMATION AND NOTES

BIGGS CARDOSA ASSOCIATES INC
STRUCTURAL ENGINEERS
865 The Alameda
San Jose, California 95126
408-296-5515
BCA

DATE	
05-18-10	
DESIGN	D.L.L.
DRAWN	S.M.H.
CHECKED	A.P.N.

ENGINEERING CERTIFICATION
REGISTERED PROFESSIONAL ENGINEER SHAHRIYAR M. HAYDAR No. 2639 Exp. 12/31/10 STRUCTURAL STATE OF CALIFORNIA
PROJECT ENGINEER — DATE 5/18/10

Santa Clara Valley Water District
ACCEPTED BY DISTRICT
Dennis Cheung 6/1/10
PROJECT ENGINEER — DATE

PROJECT NAME AND SHEET DESCRIPTION:

LOWER SILVER CREEK REACHES 4, 5 & 6A

PLAN AND ELEVATION STA 131+26 TO 137+16

SCALE: AS SHOWN
VERIFY SCALES: 0 — 1"
BAR IS ONE INCH ON ORIGINAL DRAWING IF NOT ONE INCH ON THIS SHEET, ADJUST SCALES ACCORDINGLY

PROJECT NUMBER: 40264008
SHEET CODE: S-45
PAGE NUMBER: 129 OF 188

DOCUMENT NUMBER: CAD_XX-X-XXXX-XXXXX
FILENAME: W:\2001\2001093A\2001093AS45
4026 - 43120

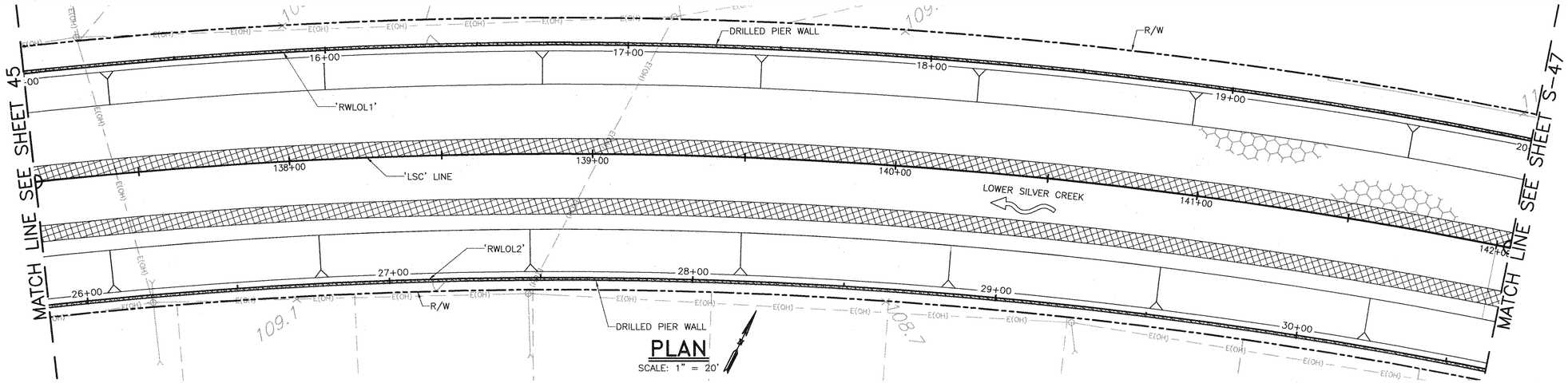

PLAN

SCALE: 1" = 20'

TOTAL LENGTH OF RETAINING WALL MEASURED ALONG RWLOL1 = 2128.42'

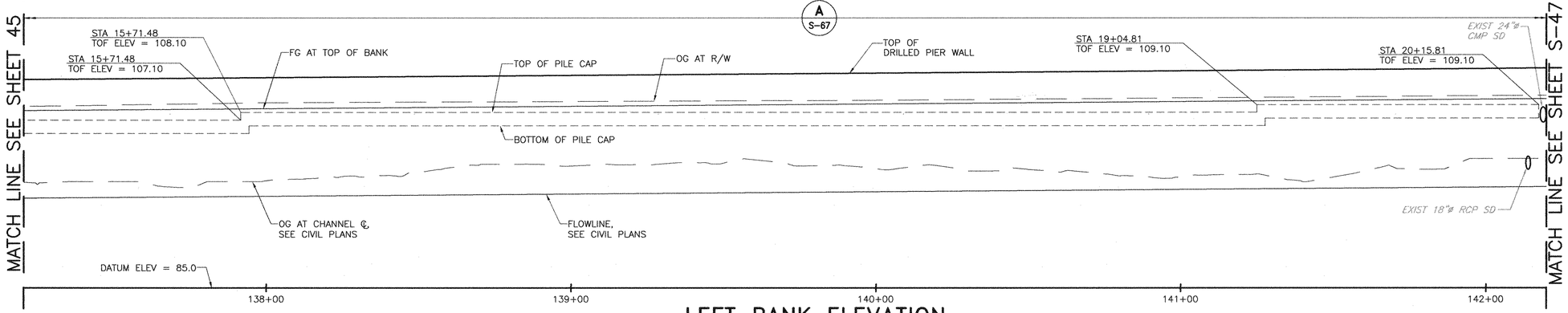

LEFT BANK ELEVATION

HORIZ SCALE: 1" = 20'
VERT SCALE: 1" = 8'

TOTAL LENGTH OF RETAINING WALL MEASURED ALONG RWLOL2 = 2312.41'

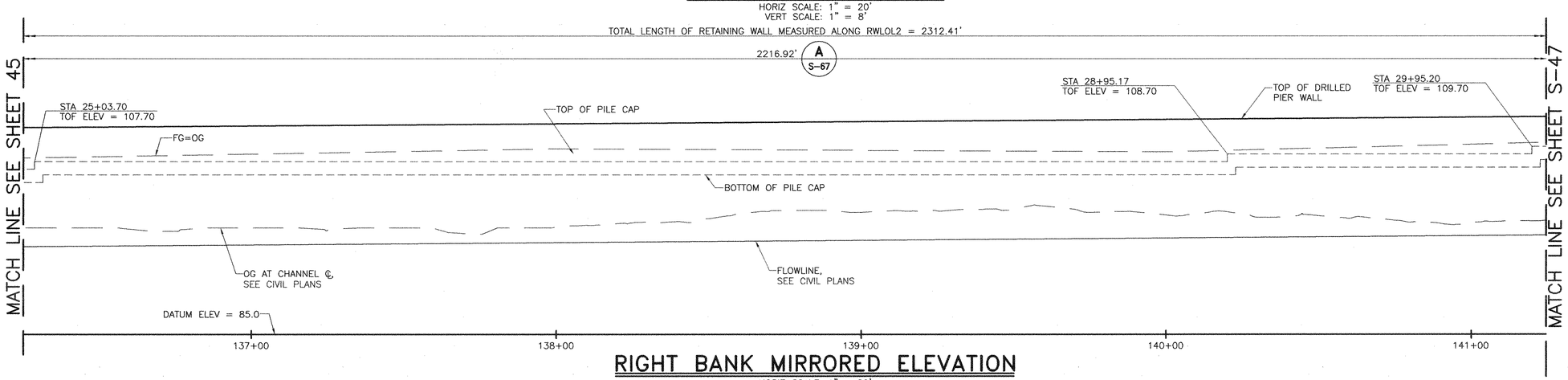

RIGHT BANK MIRRORED ELEVATION

HORIZ SCALE: 1" = 20'
VERT SCALE: 1" = 8'

NOTES:

1. FOR DRILLED PIER WALL DETAIL SHEETS, SEE S-67 & S-70.
2. FOR SOLDIER PILE WALL DETAIL SHEETS, SEE S-68, S-70 & S-71.
3. SEE CIVIL PLANS FOR EXISTING UTILITY SIZES, LOCATIONS & ELEVATIONS.
4. FOR PIPE PENETRATIONS AT DRILLED PIER OR SOLDIER PILE WALLS, SEE SHEET S-71
5. LEFT AND RIGHT BANK ELEVATIONS ARE PROJECTED FROM THE 'LSC' LINE. HORIZONTAL DIMENSIONS ON ELEVATIONS SHOULD NOT BE SCALED.
6. FOR ADDITIONAL LAYOUT AND PROFILE INFORMATION NOT NOTED, SEE 'CIVIL PLANS'.
7. TOP OF WALL PROFILES ARE LINEAR BETWEEN POINTS SHOWN UNLESS NOTED OTHERWISE.
8. TOP AND BOTTOM OF PILE CAP ARE LEVEL BETWEEN ELEVATION POINTS SHOWN UNLESS NOTED OTHERWISE
9. CONTRACTOR SHALL VERIFY AND ADJUST PILE CAP ELEVATIONS TO MAINTAIN MINIMUM DEPTH PER DETAIL 2/S-67

REV	DESCRIPTION	DATE	APPR.	REFERENCE INFORMATION AND NOTES

BIGGS CARDOSA ASSOCIATES INC
STRUCTURAL ENGINEERS
865 The Alameda
San Jose, California 95126
408-296-5515
BCA

DATE	05-18-10
DESIGN	D.L.L.
DRAWN	S.M.H.
CHECKED	A.P.N.

ENGINEERING CERTIFICATION
REGISTERED PROFESSIONAL ENGINEER ASHISH M. TAMHANE No. 2639 Exp. 12/31/10 STRUCTURAL STATE OF CALIFORNIA
PROJECT ENGINEER — DATE 5/18/10

Santa Clara Valley Water District
ACCEPTED BY DISTRICT
Dennis Cheung 6/1/10
PROJECT ENGINEER — DATE

PROJECT NAME AND SHEET DESCRIPTION:

LOWER SILVER CREEK REACHES 4, 5 & 6A

PLAN AND ELEVATION STA 137+16 TO 142+05

SCALE: AS SHOWN
VERIFY SCALES: 0 — 1"
BAR IS ONE INCH ON ORIGINAL DRAWING IF NOT ONE INCH ON THIS SHEET, ADJUST SCALES ACCORDINGLY

PROJECT NUMBER: 40264008
SHEET CODE: S-46
PAGE NUMBER: 130 OF 188

DOCUMENT NUMBER: CAD_XX-X-XXXX-XXXXX
FILENAME: W:\2001\2001093A\2001093AS46
4026-4321

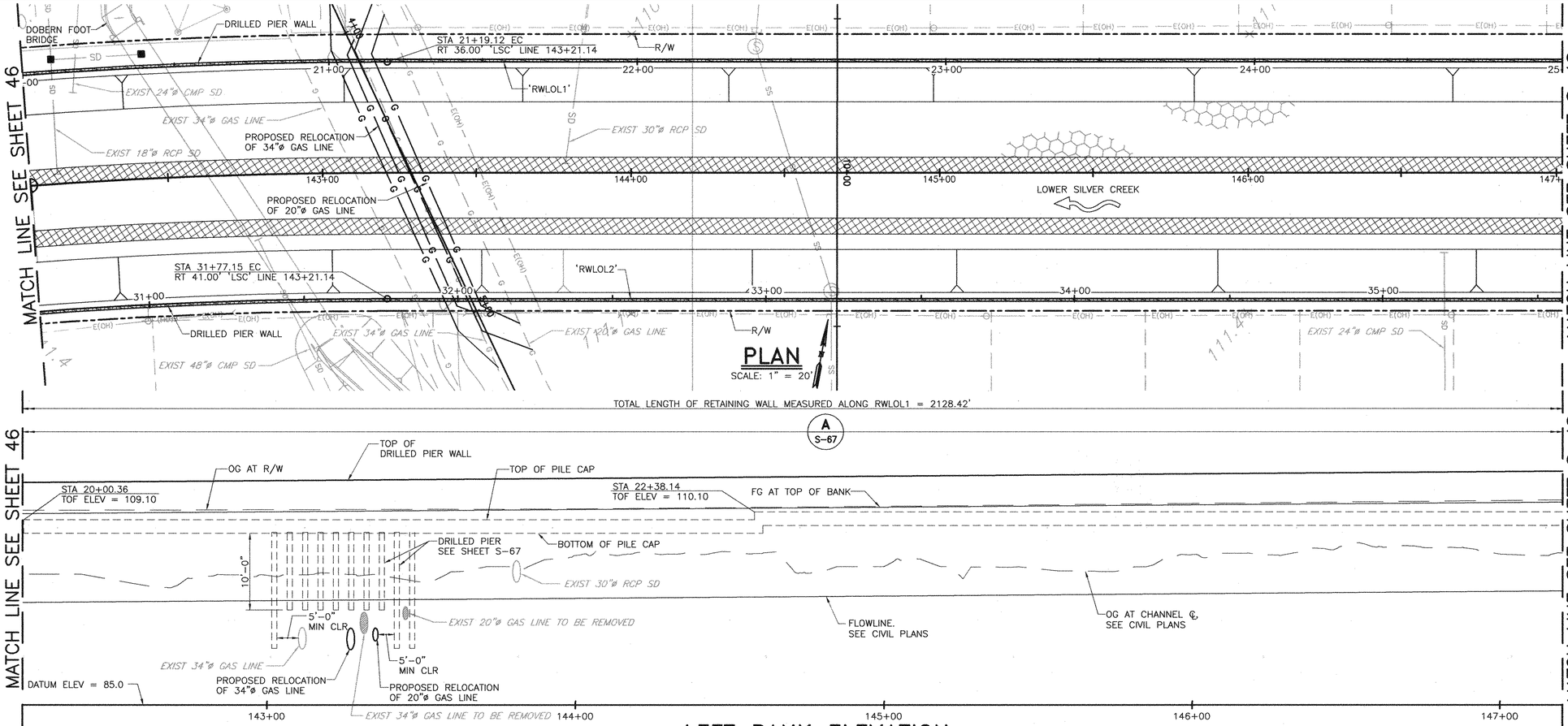

PLAN

SCALE: 1" = 20'

TOTAL LENGTH OF RETAINING WALL MEASURED ALONG RWLOL1 = 2128.42'

LEFT BANK ELEVATION

HORIZ SCALE: 1" = 20'
VERT SCALE: 1" = 8'

TOTAL LENGTH OF RETAINING WALL MEASURED ALONG RWLOL2 = 2312.41'

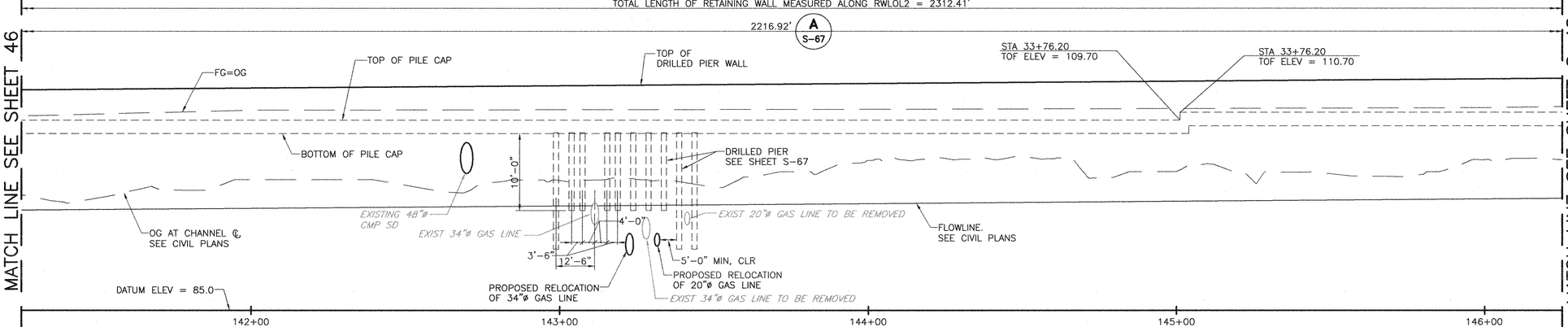

RIGHT BANK MIRRORED ELEVATION

HORIZ SCALE: 1" = 20'
VERT SCALE: 1" = 8'

NOTES:

1. FOR DRILLED PIER WALL DETAIL SHEETS, SEE S-67 & S-70.
2. FOR SOLDIER PILE WALL DETAIL SHEETS, SEE S-68, S-70 & S-71.
3. SEE CIVIL PLANS FOR EXISTING UTILITY SIZES, LOCATIONS & ELEVATIONS.
4. SEE PG&E RELOCATE PIPELINE SHEETS FOR GAS LINES.
5. FOR PIPE PENETRATIONS AT DRILLED PIER OR SOLDIER PILE WALLS, SEE SHEET S-71
6. LEFT AND RIGHT BANK ELEVATIONS ARE PROJECTED FROM THE 'LSC' LINE. HORIZONTAL DIMENSIONS ON ELEVATIONS SHOULD NOT BE SCALED.
7. FOR ADDITIONAL LAYOUT AND PROFILE INFORMATION NOT NOTED, SEE 'CIVIL PLANS'.
8. TOP OF WALL PROFILES ARE LINEAR BETWEEN POINTS SHOWN UNLESS NOTED OTHERWISE.
9. TOP AND BOTTOM OF PILE CAP ARE LEVEL BETWEEN ELEVATION POINTS SHOWN UNLESS NOTED OTHERWISE
10. CONTRACTOR SHALL VERIFY AND ADJUST PILE CAP ELEVATIONS TO MAINTAIN MINIMUM DEPTH PER DETAIL 2/S-67

REV	DESCRIPTION	DATE	APPR.	REFERENCE INFORMATION AND NOTES

BIGGS CARDOSA ASSOCIATES INC
STRUCTURAL ENGINEERS
865 The Alameda
San Jose, California 95126
408-296-5515

DATE 05-18-10
DESIGN D.L.L.
DRAWN S.M.H.
CHECKED A.P.N.

ENGINEERING CERTIFICATION
REGISTERED PROFESSIONAL ENGINEER ABDIAISH M HATEFI No. 2639 Exp. 12/31/10 STRUCTURAL STATE OF CALIFORNIA
PROJECT ENGINEER 5/18/10 DATE

Santa Clara Valley Water District
ACCEPTED BY DISTRICT
Dennis Cheong 6/1/10
PROJECT ENGINEER DATE

PROJECT NAME AND SHEET DESCRIPTION:

LOWER SILVER CREEK REACHES 4, 5 & 6A

PLAN AND ELEVATION STA 142+05 TO 147+02

SCALE: AS SHOWN
VERIFY SCALES 0 1"
BAR IS ONE INCH ON ORIGINAL DRAWING IF NOT ONE INCH ON THIS SHEET, ADJUST SCALES ACCORDINGLY

PROJECT NUMBER 40264008
SHEET CODE: S-47
PAGE NUMBER: 131 OF 188

DOCUMENT NUMBER: CAD_XX-X-XXXX-XXXXX
FILENAME: W:\2001\2001093A\2001093AS47
4026 - 43/22

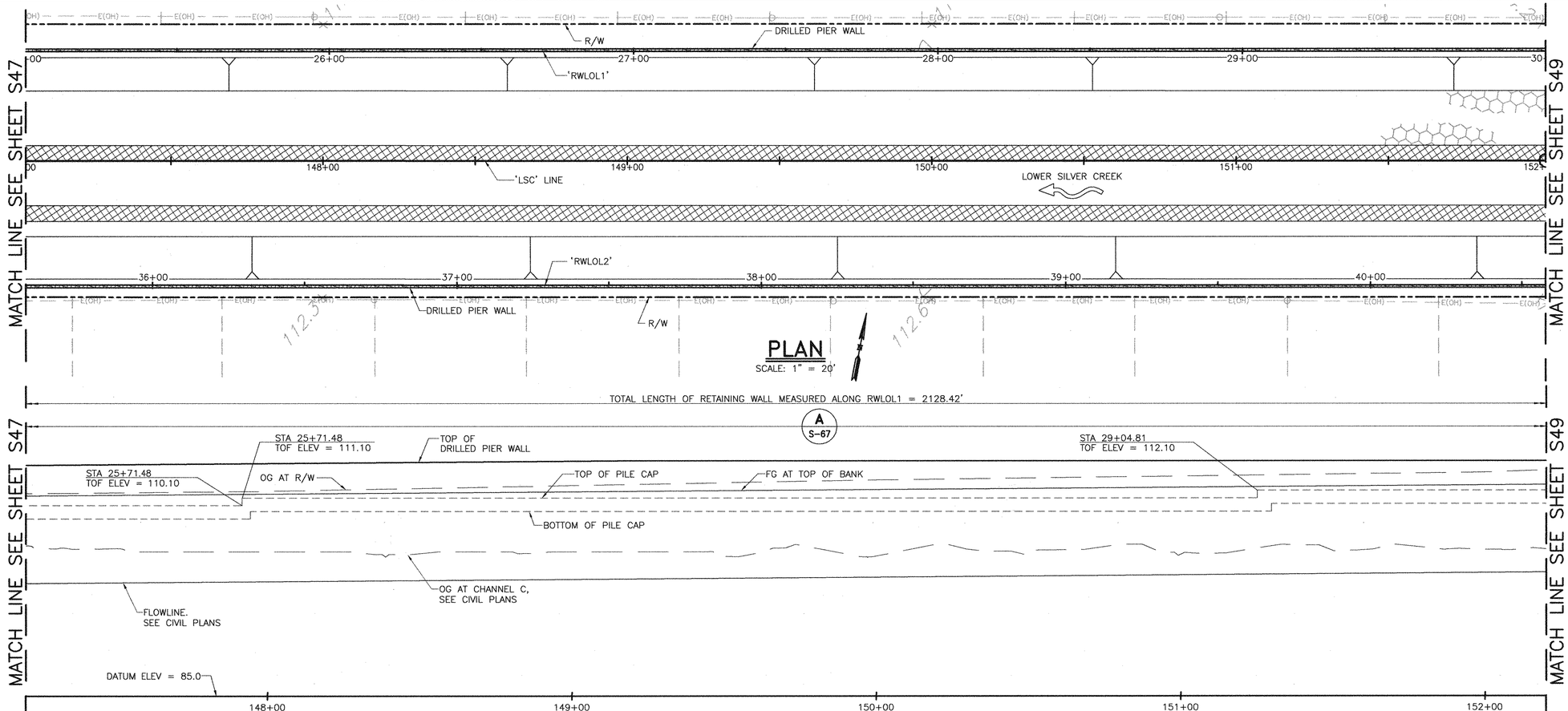

PLAN

SCALE: 1" = 20'

LEFT BANK ELEVATION

HORIZ SCALE: 1" = 20'
VERT SCALE: 1" = 8'

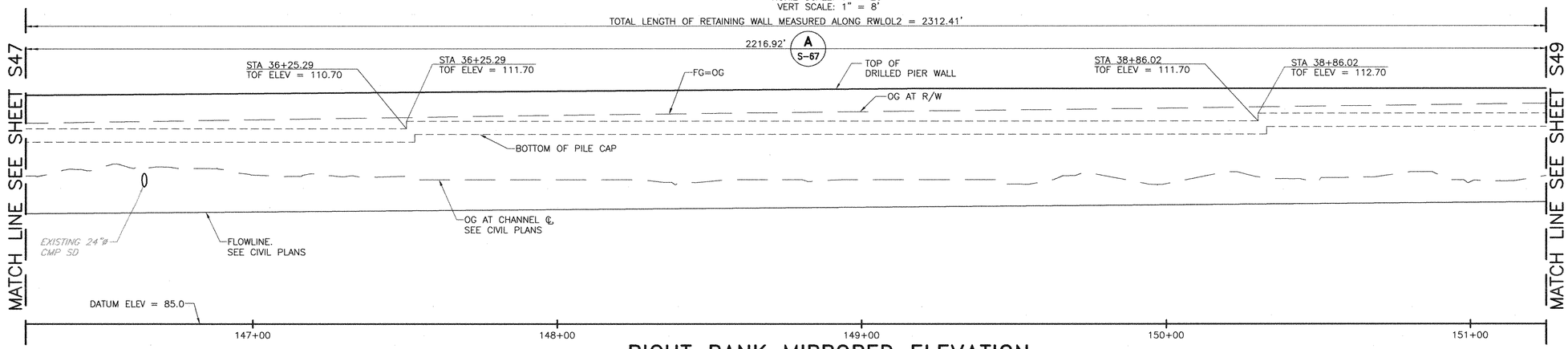

RIGHT BANK MIRRORED ELEVATION

HORIZ SCALE: 1" = 20'
VERT SCALE: 1" = 8'

NOTES:

1. FOR DRILLED PIER WALL DETAIL SHEETS, SEE S-67 & S-70.
2. FOR SOLDIER PILE WALL DETAIL SHEETS, SEE S-68, S-70 & S-71.
3. SEE CIVIL PLANS FOR EXISTING UTILITY SIZES, LOCATIONS & ELEVATIONS.
4. FOR PIPE PENETRATIONS AT DRILLED PIER OR SOLDIER PILE WALLS, SEE SHEET S-71
5. LEFT AND RIGHT BANK ELEVATIONS ARE PROJECTED FROM THE 'LSC' LINE. HORIZONTAL DIMENSIONS ON ELEVATIONS SHOULD NOT BE SCALED.
6. FOR ADDITIONAL LAYOUT AND PROFILE INFORMATION NOT NOTED, SEE 'CIVIL PLANS'.
7. TOP OF WALL PROFILES ARE LINEAR BETWEEN POINTS SHOWN UNLESS NOTED OTHERWISE.
8. TOP AND BOTTOM OF PILE CAP ARE LEVEL BETWEEN ELEVATION POINTS SHOWN UNLESS NOTED OTHERWISE
9. CONTRACTOR SHALL VERIFY AND ADJUST PILE CAP ELEVATIONS TO MAINTAIN MINIMUM DEPTH PER DETAIL 2/S-67

REV	DESCRIPTION	DATE	APPR.	REFERENCE INFORMATION AND NOTES

BIGGS CARDOSA ASSOCIATES INC
STRUCTURAL ENGINEERS
865 The Alameda
San Jose, California 95126
408-296-5515
BCA

DATE	05-18-10
DESIGN	D.L.L.
DRAWN	S.M.H.
CHECKED	A.P.N.

ENGINEERING CERTIFICATION
REGISTERED PROFESSIONAL ENGINEER — AMIT MANISH HARIANI — No. 2639 — Exp. 12/31/10 — STRUCTURAL — STATE OF CALIFORNIA
PROJECT ENGINEER — DATE 5/18/10

Santa Clara Valley Water District
ACCEPTED BY DISTRICT
PROJECT ENGINEER — DATE 6/1/10

PROJECT NAME AND SHEET DESCRIPTION:

LOWER SILVER CREEK REACHES 4, 5 & 6A

PLAN AND ELEVATION STA 147+02 TO 152+02

SCALE: AS SHOWN
VERIFY SCALES: 0 — 1"
BAR IS ONE INCH ON ORIGINAL DRAWING IF NOT ONE INCH ON THIS SHEET, ADJUST SCALES ACCORDINGLY

PROJECT NUMBER: 40264008
SHEET CODE: S-48
PAGE NUMBER: 132 OF 188

DOCUMENT NUMBER: CAD_XX-X-XXXX-XXXXX
FILENAME: W:\2001\2001093A\2001093AS48
4026 - 43123

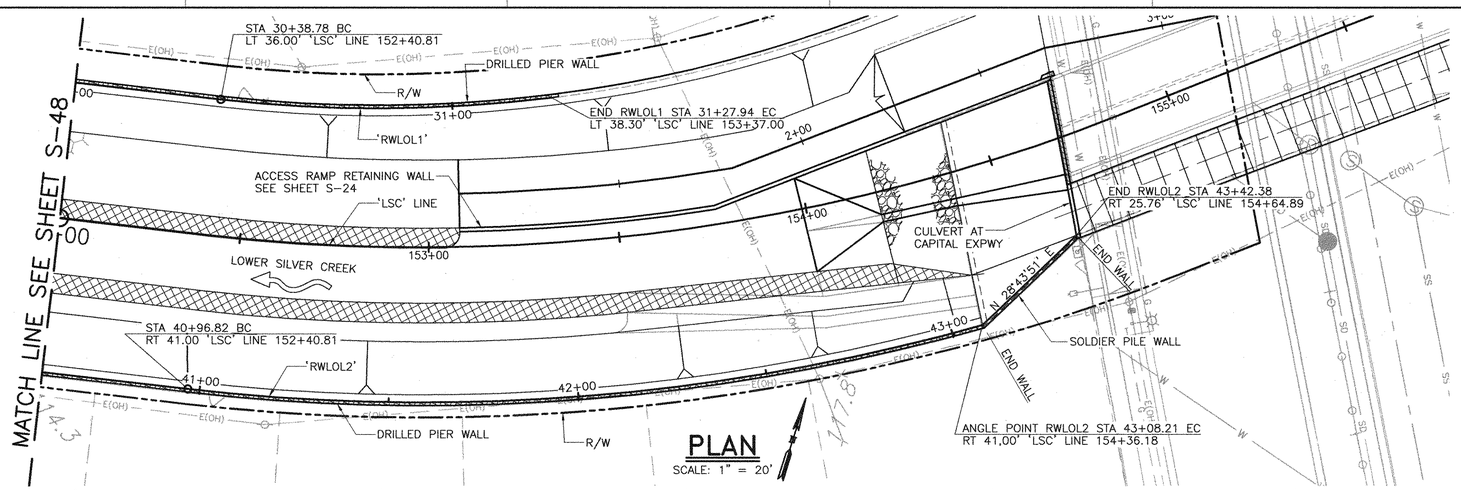

PLAN

SCALE: 1" = 20'

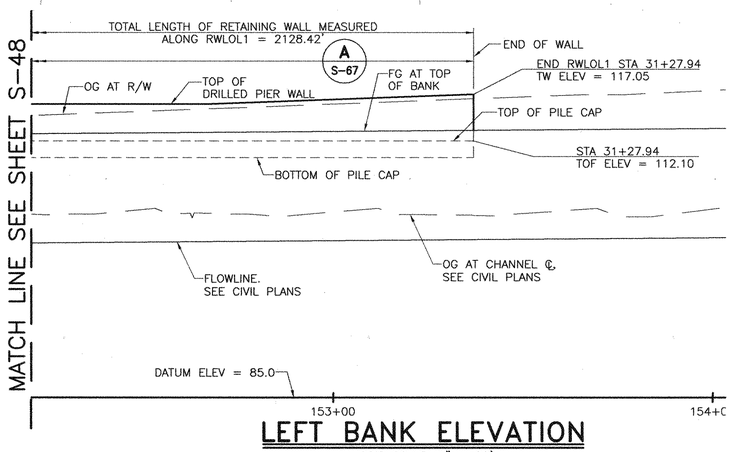

LEFT BANK ELEVATION

HORIZ SCALE: 1" = 20'
VERT SCALE: 1" = 8'

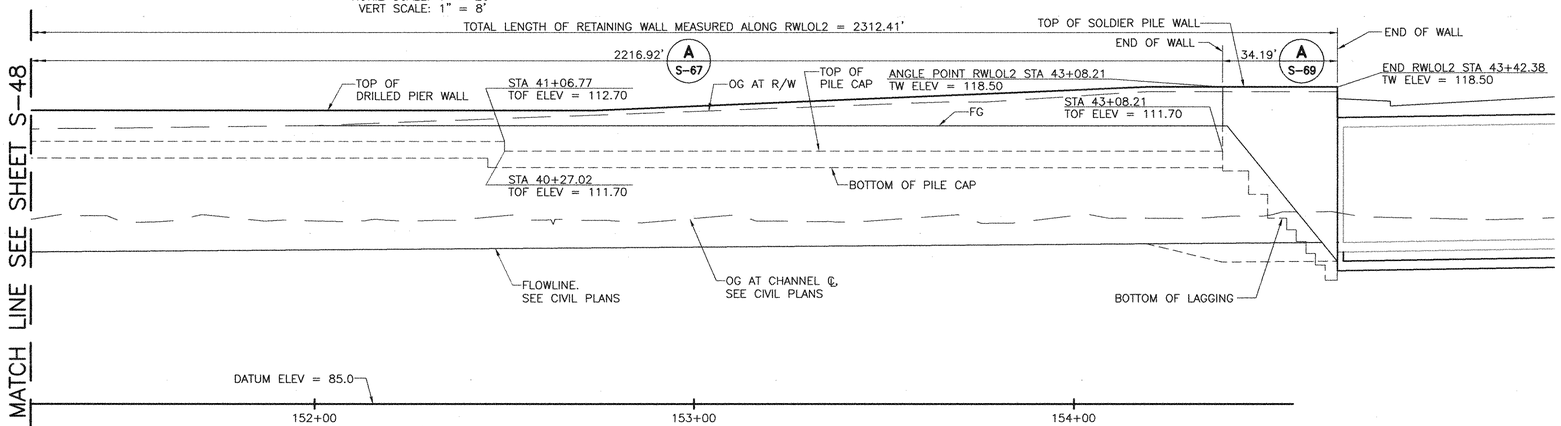

RIGHT BANK MIRRORED ELEVATION

HORIZ SCALE: 1" = 20'
VERT SCALE: 1" = 8'

NOTES:

1. FOR DRILLED PIER WALL DETAIL SHEETS, SEE S-67 & S-70.
2. FOR SOLDIER PILE WALL DETAIL SHEETS, SEE S-68, S-70 & S-71.
3. SEE CIVIL PLANS FOR EXISTING UTILITY SIZES, LOCATIONS & ELEVATIONS.
4. FOR PIPE PENETRATIONS AT DRILLED PIER OR SOLDIER PILE WALLS, SEE SHEET S-71
5. LEFT AND RIGHT BANK ELEVATIONS ARE PROJECTED FROM THE 'LSC' LINE. HORIZONTAL DIMENSIONS ON ELEVATIONS SHOULD NOT BE SCALED.
6. FOR ADDITIONAL LAYOUT AND PROFILE INFORMATION NOT NOTED, SEE 'CIVIL PLANS'.
7. TOP OF WALL PROFILES ARE LINEAR BETWEEN POINTS SHOWN UNLESS NOTED OTHERWISE.
8. TOP AND BOTTOM OF PILE CAP ARE LEVEL BETWEEN ELEVATION POINTS SHOWN UNLESS NOTED OTHERWISE
9. CONTRACTOR SHALL VERIFY AND ADJUST PILE CAP ELEVATIONS TO MAINTAIN MINIMUM DEPTH PER DETAIL 2/S-67

REV	DESCRIPTION	DATE	APPR.	REFERENCE INFORMATION AND NOTES

BIGGS CARDOSA ASSOCIATES INC
STRUCTURAL ENGINEERS
865 The Alameda
San Jose, California 95126
408-298-5515
BCA

DATE	ENGINEERING CERTIFICATION
05-18-10	REGISTERED PROFESSIONAL ENGINEER JAMES M. HARRIS No. 2639 Exp. 12/31/10 STRUCTURAL STATE OF CALIFORNIA
DESIGN D.L.L.	
DRAWN S.M.H.	
CHECKED A.P.N.	5/18/10 PROJECT ENGINEER DATE

Santa Clara Valley Water District

ACCEPTED BY DISTRICT
Dennis Chesney 6/1/10
PROJECT ENGINEER DATE

PROJECT NAME AND SHEET DESCRIPTION:

LOWER SILVER CREEK REACHES 4, 5 & 6A

PLAN AND ELEVATION STA 152+02 TO 155+50

SCALE	PROJECT NUMBER
AS SHOWN	40264008
VERIFY SCALES 0 1" BAR IS ONE INCH ON ORIGINAL DRAWING IF NOT ONE INCH ON THIS SHEET, ADJUST SCALES ACCORDINGLY	SHEET CODE: S-49
	PAGE NUMBER: 133 OF 188

DOCUMENT NUMBER: CAD_XX-X-XXXX-XXXXX
FILENAME: W:\2001\2001093A\2001093AS49
4026-43124

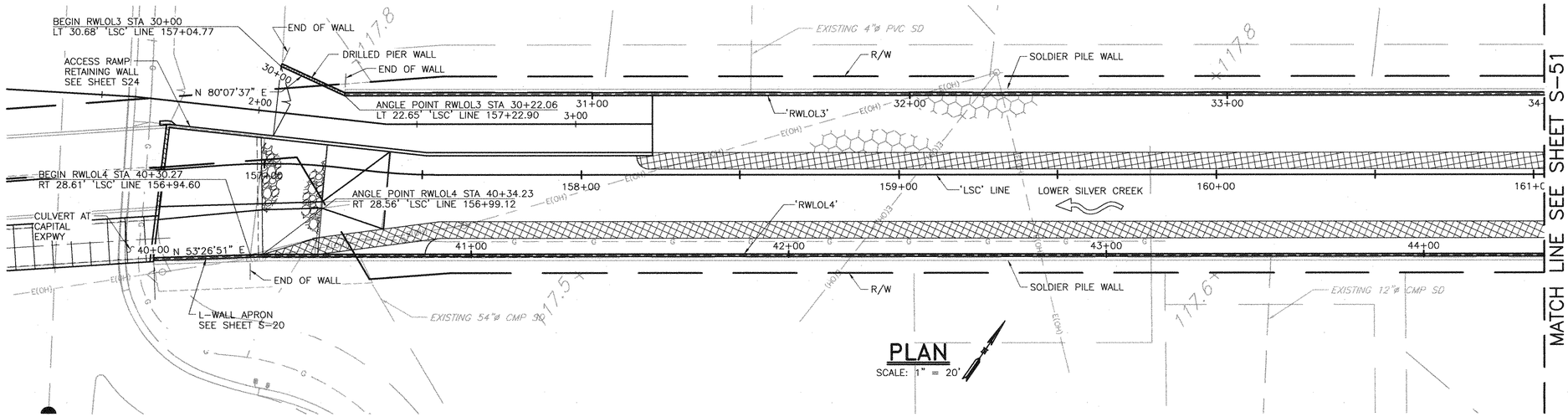

PLAN

SCALE: 1" = 20'

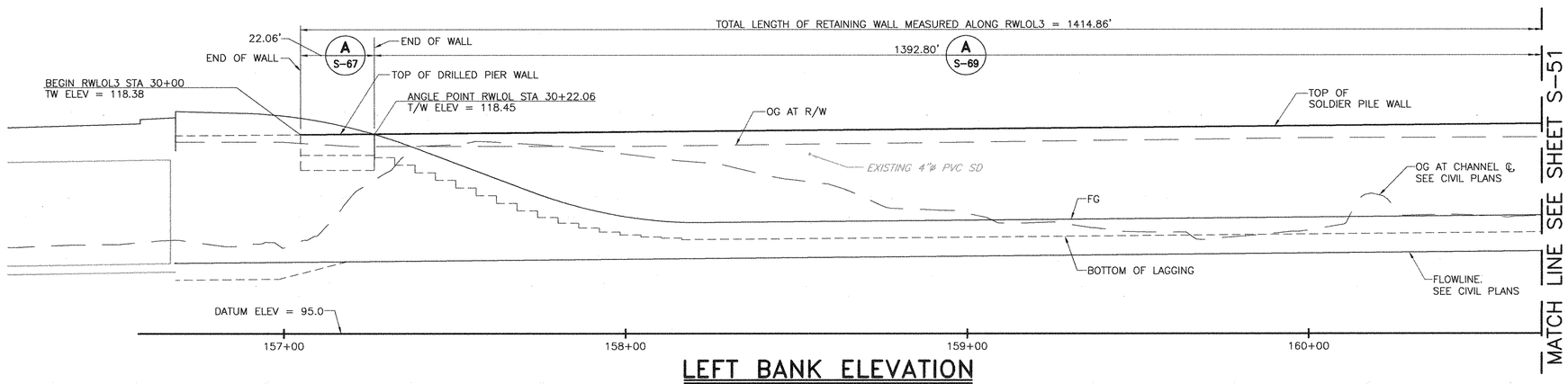

LEFT BANK ELEVATION

HORIZ SCALE: 1" = 20'
VERT SCALE: 1" = 8'

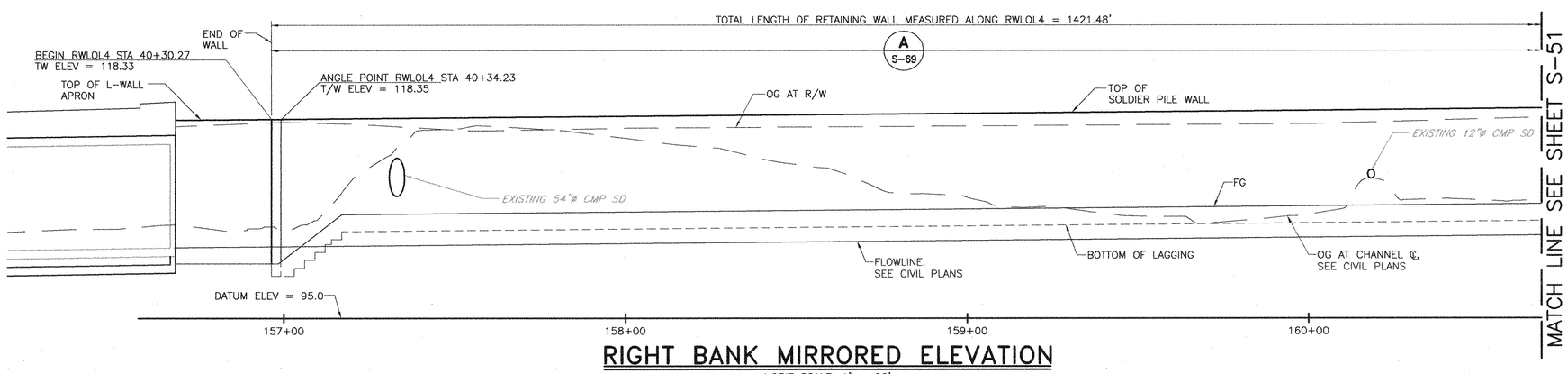

RIGHT BANK MIRRORED ELEVATION

HORIZ SCALE: 1" = 20'
VERT SCALE: 1" = 8'

NOTES:

1. FOR DRILLED PIER WALL DETAIL SHEETS, SEE S-67 & S-70.
2. FOR SOLDIER PILE WALL DETAIL SHEETS, SEE S-68, S-70 & S-71.
3. SEE CIVIL PLANS FOR EXISTING UTILITY SIZES, LOCATIONS & ELEVATIONS.
4. FOR PIPE PENETRATIONS AT DRILLED PIER OR SOLDIER PILE WALLS, SEE SHEET S-71
5. LEFT AND RIGHT BANK ELEVATIONS ARE PROJECTED FROM THE 'LSC' LINE. HORIZONTAL DIMENSIONS ON ELEVATIONS SHOULD NOT BE SCALED.
6. FOR ADDITIONAL LAYOUT AND PROFILE INFORMATION NOT NOTED, SEE 'CIVIL PLANS'.
7. TOP OF WALL PROFILES ARE LINEAR BETWEEN POINTS SHOWN UNLESS NOTED OTHERWISE.
8. TOP AND BOTTOM OF PILE CAP ARE LEVEL BETWEEN ELEVATION POINTS SHOWN UNLESS NOTED OTHERWISE
9. CONTRACTOR SHALL VERIFY AND ADJUST PILE CAP ELEVATIONS TO MAINTAIN MINIMUM DEPTH PER DETAIL 2/S-67

REV	DESCRIPTION	DATE	APPR.	REFERENCE INFORMATION AND NOTES

BIGGS CARDOSA ASSOCIATES INC
STRUCTURAL ENGINEERS
865 The Alameda
San Jose, California 95126
408-296-5515
BCA

DATE 05-18-10
DESIGN D.L.L.
DRAWN S.M.H.
CHECKED A.P.N.

ENGINEERING CERTIFICATION
REGISTERED PROFESSIONAL ENGINEER AMYASH M. HAYNIE No. 2639 Exp. 12/31/10 STRUCTURAL STATE OF CALIFORNIA
PROJECT ENGINEER — DATE 5/18/10

Santa Clara Valley Water District
ACCEPTED BY DISTRICT
Dennis Cheong 6/1/10
PROJECT ENGINEER — DATE

PROJECT NAME AND SHEET DESCRIPTION:

LOWER SILVER CREEK REACHES 4, 5 & 6A

PLAN AND ELEVATION STA 156+50 TO 161+02

SCALE: AS SHOWN
VERIFY SCALES: 0 — 1"
BAR IS ONE INCH ON ORIGINAL DRAWING IF NOT ONE INCH ON THIS SHEET, ADJUST SCALES ACCORDINGLY

PROJECT NUMBER: 40264008
SHEET CODE: S-50
PAGE NUMBER: 134 OF 188

DOCUMENT NUMBER: CAD_XX-X-XXXX-XXXXX
FILENAME: W:\2001\2001093A\2001093AS50
4026-43125

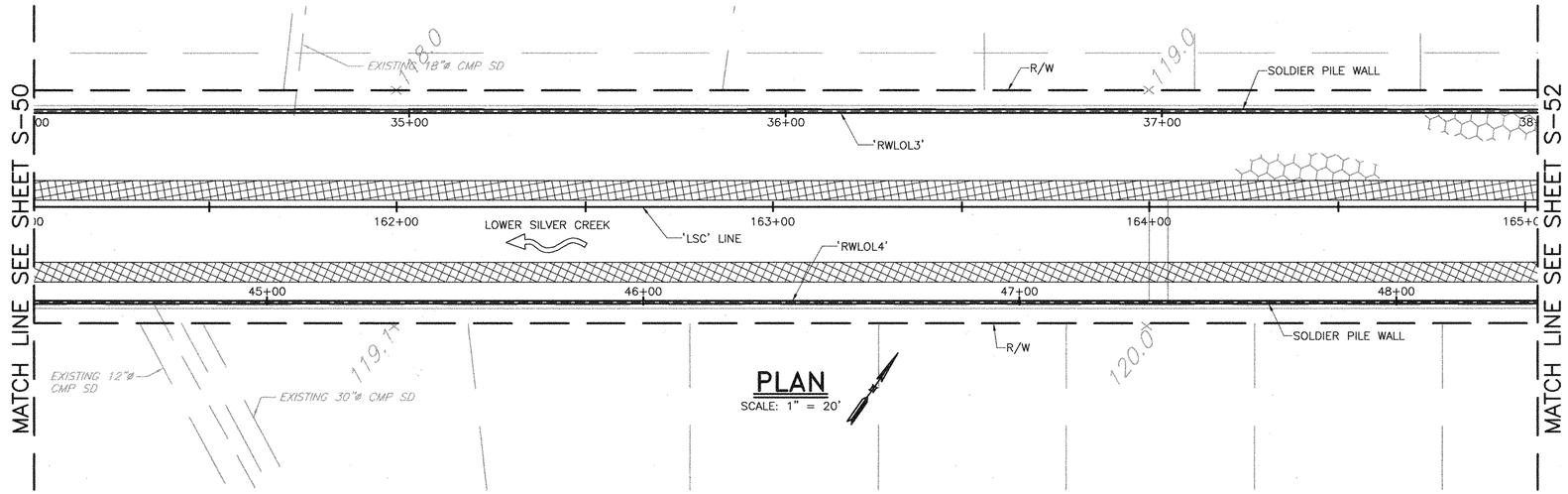

PLAN

SCALE: 1" = 20'

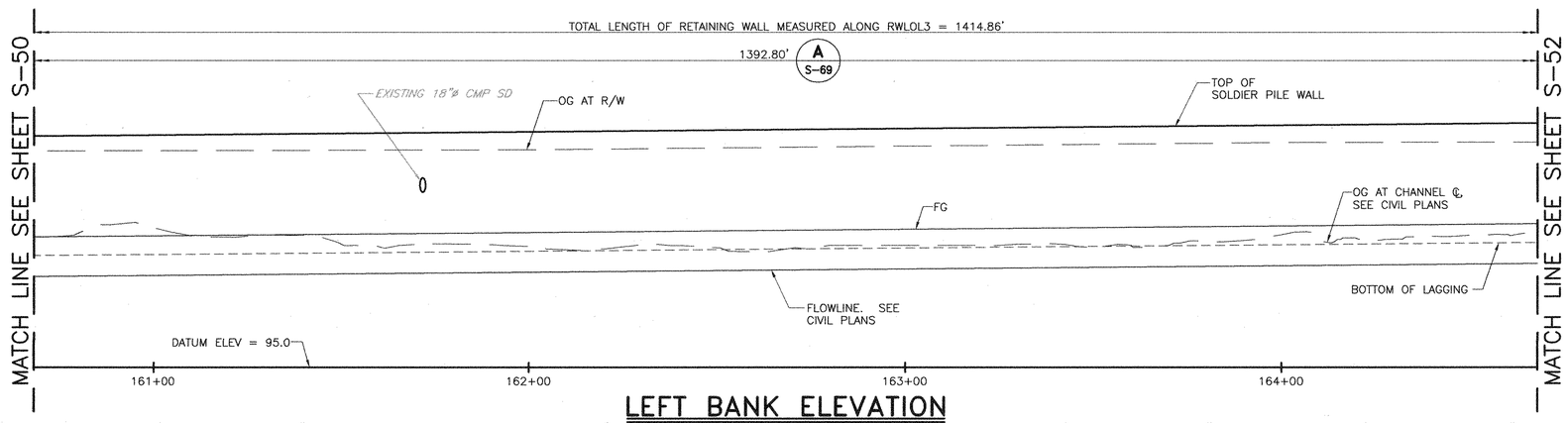

LEFT BANK ELEVATION

HORIZ SCALE: 1" = 20'
VERT SCALE: 1" = 8'

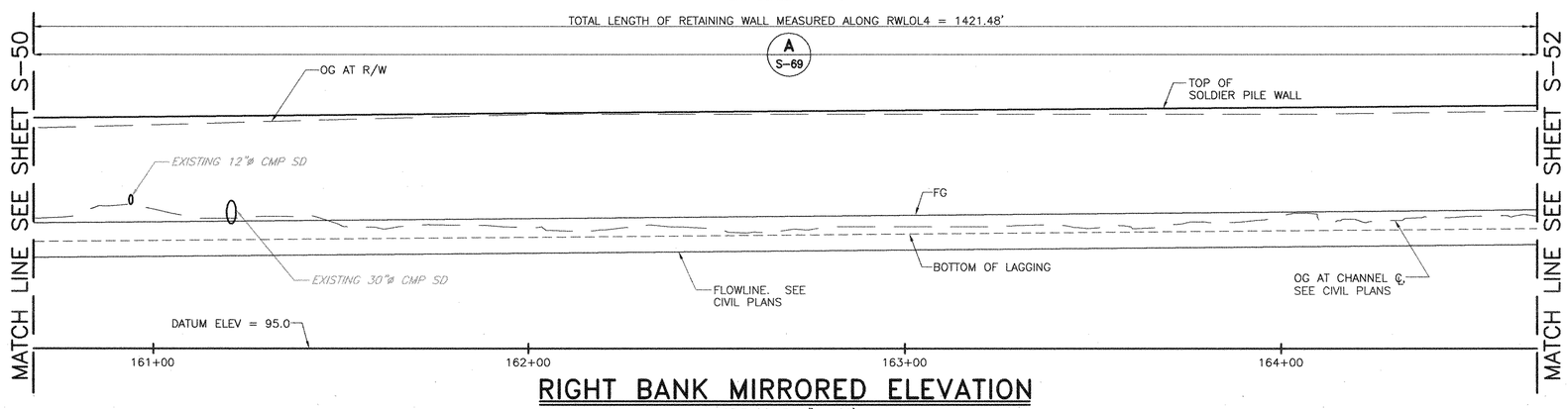

RIGHT BANK MIRRORED ELEVATION

HORIZ SCALE: 1" = 20'
VERT SCALE: 1" = 8'

NOTES:

1. FOR DRILLED PIER WALL DETAIL SHEETS, SEE S-67 & S-70.
2. FOR SOLDIER PILE WALL DETAIL SHEETS, SEE S-68, S-70 & S-71.
3. SEE CIVIL PLANS FOR EXISTING UTILITY SIZES, LOCATIONS & ELEVATIONS.
4. FOR PIPE PENETRATIONS AT DRILLED PIER OR SOLDIER PILE WALLS, SEE SHEET S-71
5. LEFT AND RIGHT BANK ELEVATIONS ARE PROJECTED FROM THE 'LSC' LINE. HORIZONTAL DIMENSIONS ON ELEVATIONS SHOULD NOT BE SCALED.
6. FOR ADDITIONAL LAYOUT AND PROFILE INFORMATION NOT NOTED, SEE 'CIVIL PLANS'.
7. TOP OF WALL PROFILES ARE LINEAR BETWEEN POINTS SHOWN UNLESS NOTED OTHERWISE.
8. TOP AND BOTTOM OF PILE CAP ARE LEVEL BETWEEN ELEVATION POINTS SHOWN UNLESS NOTED OTHERWISE
9. CONTRACTOR SHALL VERIFY AND ADJUST PILE CAP ELEVATIONS TO MAINTAIN MINIMUM DEPTH

PER DETAIL 2 / S-67

REV	DESCRIPTION	DATE	APPR.	REFERENCE INFORMATION AND NOTES

BIGGS CARDOSA ASSOCIATES INC
STRUCTURAL ENGINEERS
865 The Alameda
San Jose, California 95126
408-296-5515
BCA

DATE	05-18-10
DESIGN	D.L.L.
DRAWN	S.M.H.
CHECKED	A.P.N.

ENGINEERING CERTIFICATION
REGISTERED PROFESSIONAL ENGINEER — SHAUN M. HARPER — No. 2639 — Exp. 12/31/10 — STRUCTURAL — STATE OF CALIFORNIA
PROJECT ENGINEER — DATE 5/18/10

Santa Clara Valley Water District
ACCEPTED BY DISTRICT
Dennis Cheong — 6/1/10
PROJECT ENGINEER — DATE

PROJECT NAME AND SHEET DESCRIPTION:

LOWER SILVER CREEK REACHES 4, 5 & 6A

PLAN AND ELEVATION STA 161+02 TO 165+02

SCALE: AS SHOWN
VERIFY SCALES: 0 — 1"
BAR IS ONE INCH ON ORIGINAL DRAWING IF NOT ONE INCH ON THIS SHEET, ADJUST SCALES ACCORDINGLY

PROJECT NUMBER: 40264008
SHEET CODE: S-51
PAGE NUMBER: 135 OF 188

DOCUMENT NUMBER: CAD_XX-X-XXXX-XXXXX
FILENAME: W:\2001\2001093A\2001093AS51
4026-43126

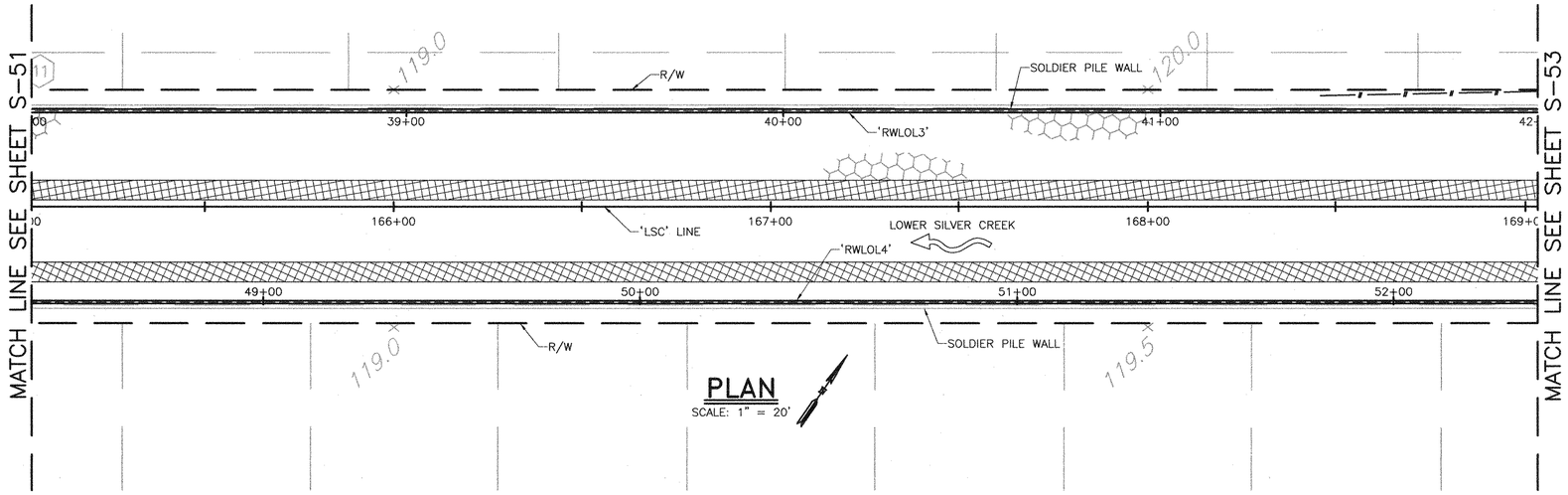

PLAN

SCALE: 1" = 20'

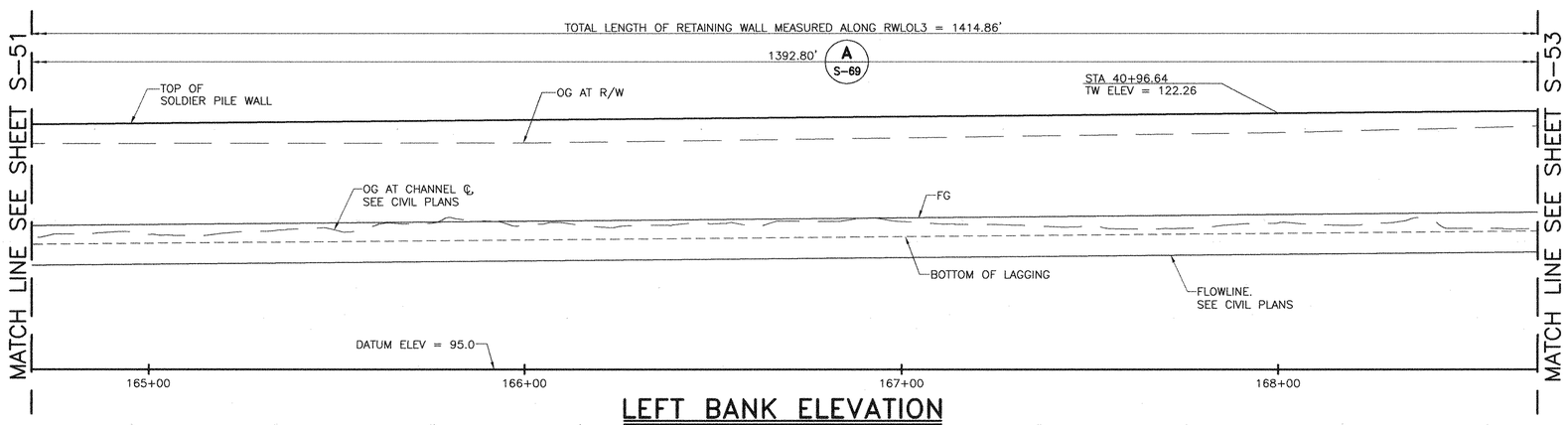

LEFT BANK ELEVATION

HORIZ SCALE: 1" = 20'
VERT SCALE: 1" = 8'

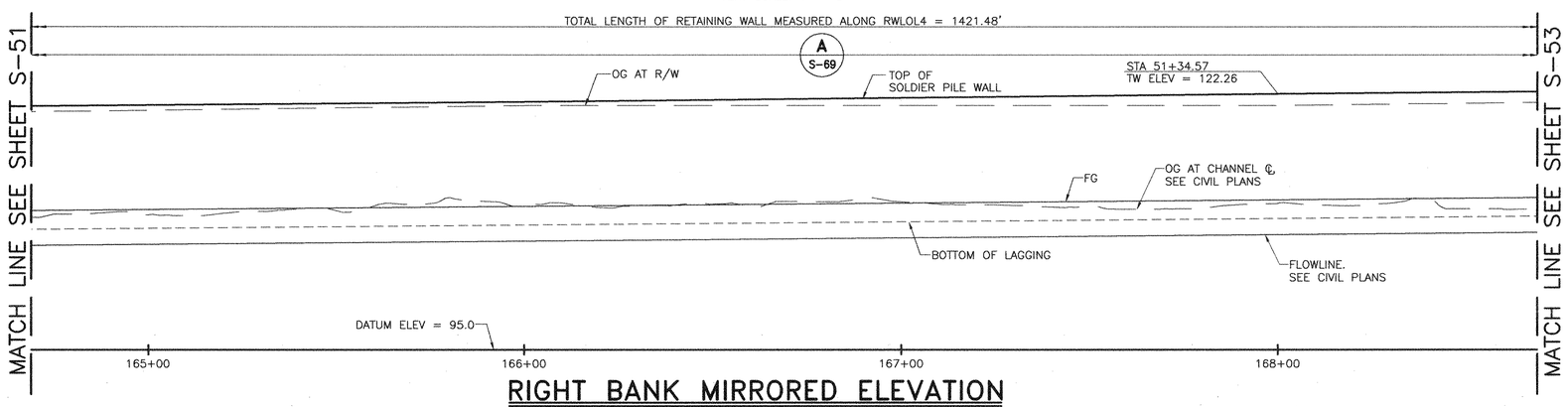

RIGHT BANK MIRRORED ELEVATION

HORIZ SCALE: 1" = 20'
VERT SCALE: 1" = 8'

NOTES:

1. FOR DRILLED PIER WALL DETAIL SHEETS, SEE S-67 & S-70.
2. FOR SOLDIER PILE WALL DETAIL SHEETS, SEE S-68, S-70 & S-71.
3. SEE CIVIL PLANS FOR EXISTING UTILITY SIZES, LOCATIONS & ELEVATIONS.
4. FOR PIPE PENETRATIONS AT DRILLED PIER OR SOLDIER PILE WALLS, SEE SHEET S-71
5. LEFT AND RIGHT BANK ELEVATIONS ARE PROJECTED FROM THE 'LSC' LINE. HORIZONTAL DIMENSIONS ON ELEVATIONS SHOULD NOT BE SCALED.
6. FOR ADDITIONAL LAYOUT AND PROFILE INFORMATION NOT NOTED, SEE 'CIVIL PLANS'.
7. TOP OF WALL PROFILES ARE LINEAR BETWEEN POINTS SHOWN UNLESS NOTED OTHERWISE.
8. TOP AND BOTTOM OF PILE CAP ARE LEVEL BETWEEN ELEVATION POINTS SHOWN UNLESS NOTED OTHERWISE
9. CONTRACTOR SHALL VERIFY AND ADJUST PILE CAP ELEVATIONS TO MAINTAIN MINIMUM DEPTH PER DETAIL 2/S-67

REV	DESCRIPTION	DATE	APPR.	REFERENCE INFORMATION AND NOTES

BIGGS CARDOSA ASSOCIATES INC
STRUCTURAL ENGINEERS
865 The Alameda
San Jose, California 95126
408-296-5515
BCA

DATE	05-18-10
DESIGN	D.L.L.
DRAWN	S.M.H.
CHECKED	
A.P.N.	

ENGINEERING CERTIFICATION
REGISTERED PROFESSIONAL ENGINEER — ALNASH M. HAFERS — No. 2639 — Exp. 12/31/10 — STRUCTURAL — STATE OF CALIFORNIA
PROJECT ENGINEER — DATE 5/18/10

Santa Clara Valley Water District
ACCEPTED BY DISTRICT
Dennis Chang 6/1/10
PROJECT ENGINEER — DATE

PROJECT NAME AND SHEET DESCRIPTION:

LOWER SILVER CREEK REACHES 4, 5 & 6A

PLAN AND ELEVATION STA 165+02 TO 169+02

SCALE: AS SHOWN
VERIFY SCALES: 0 — 1"
BAR IS ONE INCH ON ORIGINAL DRAWING. IF NOT ONE INCH ON THIS SHEET, ADJUST SCALES ACCORDINGLY

PROJECT NUMBER: 40264008
SHEET CODE: S-52
PAGE NUMBER: 136 OF 188

DOCUMENT NUMBER: CAD_XX-X-XXXX-XXXXX
FILENAME: W:\2001\2001093A\2001093AS52
4026 - 93/27

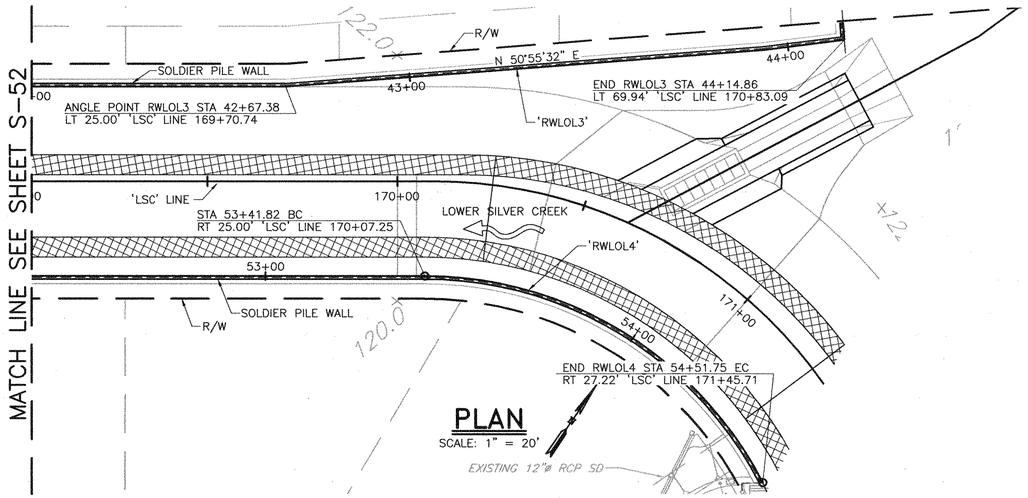

PLAN

SCALE: 1" = 20'

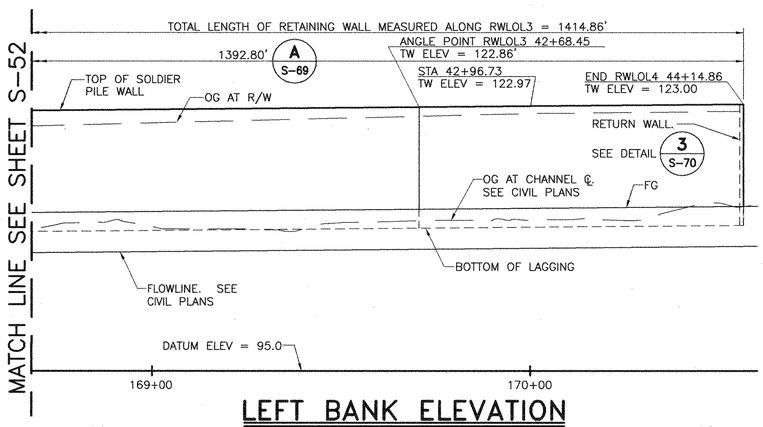

LEFT BANK ELEVATION

HORIZ SCALE: 1" = 20'
VERT SCALE: 1" = 8'

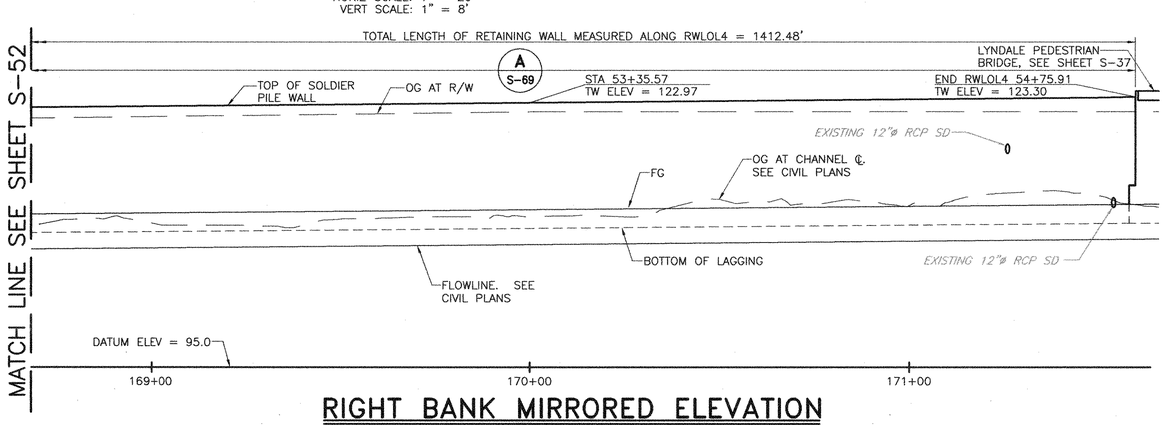

RIGHT BANK MIRRORED ELEVATION

HORIZ SCALE: 1" = 20'
VERT SCALE: 1" = 8'

NOTES:

1. FOR DRILLED PIER WALL DETAIL SHEETS, SEE S-67 & S-70.
2. FOR SOLDIER PILE WALL DETAIL SHEETS, SEE S-68, S-70 & S-71.
3. SEE CIVIL PLANS FOR EXISTING UTILITY SIZES, LOCATIONS & ELEVATIONS.
4. FOR PIPE PENETRATIONS AT DRILLED PIER OR SOLDIER PILE WALLS, SEE SHEET S-71
5. LEFT AND RIGHT BANK ELEVATIONS ARE PROJECTED FROM THE 'LSC' LINE. HORIZONTAL DIMENSIONS ON ELEVATIONS SHOULD NOT BE SCALED.
6. FOR ADDITIONAL LAYOUT AND PROFILE INFORMATION NOT NOTED, SEE 'CIVIL PLANS'.
7. TOP OF WALL PROFILES ARE LINEAR BETWEEN POINTS SHOWN UNLESS NOTED OTHERWISE.
8. TOP AND BOTTOM OF PILE CAP ARE LEVEL BETWEEN ELEVATION POINTS SHOWN UNLESS NOTED OTHERWISE
9. CONTRACTOR SHALL VERIFY AND ADJUST PILE CAP ELEVATIONS TO MAINTAIN MINIMUM DEPTH PER DETAIL 2 / S-67

REV	DESCRIPTION	DATE	APPR.	REFERENCE INFORMATION AND NOTES

BIGGS CARDOSA ASSOCIATES INC
STRUCTURAL ENGINEERS
865 The Alameda
San Jose, California 95126
408-296-5515
BCA

DATE 05-18-10
DESIGN D.L.L.
DRAWN S.M.H.
CHECKED A.P.N.

ENGINEERING CERTIFICATION
REGISTERED PROFESSIONAL ENGINEER JAMES M. HARRIS No. 2639 Exp. 12/31/10 STRUCTURAL STATE OF CALIFORNIA
PROJECT ENGINEER 5/18/10 DATE

Santa Clara Valley Water District
ACCEPTED BY DISTRICT
Dennis Cheung 6/1/10
PROJECT ENGINEER DATE

PROJECT NAME AND SHEET DESCRIPTION:

LOWER SILVER CREEK REACHES 4, 5 & 6A

PLAN AND ELEVATION STA 169+02 TO 171+30

SCALE: AS SHOWN
VERIFY SCALES 0 1"
BAR IS ONE INCH ON ORIGINAL DRAWING IF NOT ONE INCH ON THIS SHEET, ADJUST SCALES ACCORDINGLY

PROJECT NUMBER 40264008
SHEET CODE: S-53
PAGE NUMBER: 137 OF 188

DOCUMENT NUMBER: CAD_XX-X-XXXX-XXXXX
FILENAME: W:\2001\2001093A\2001093AS53
4026-43/28

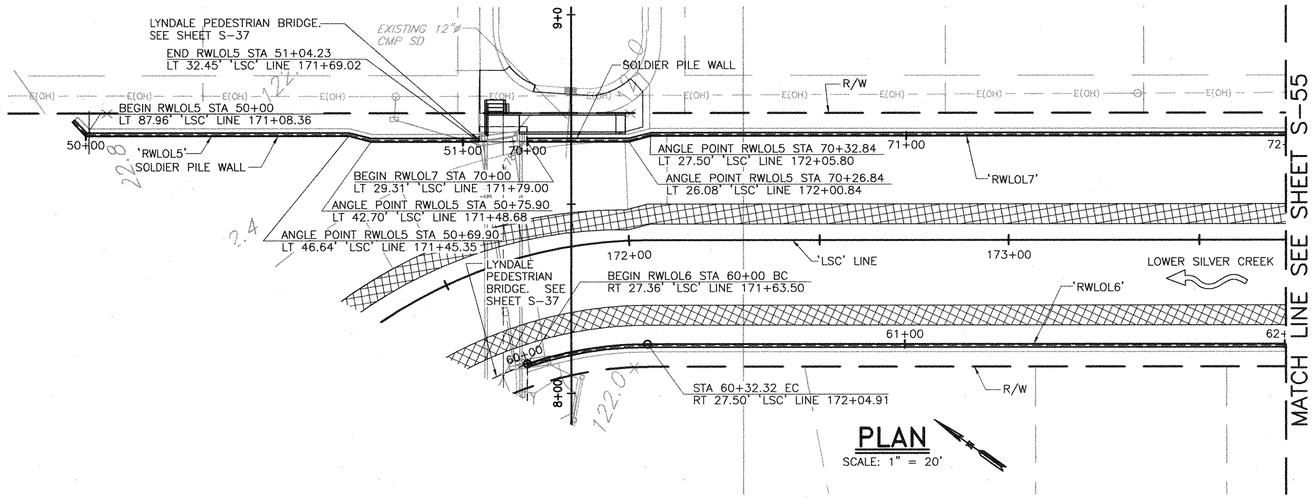

PLAN

SCALE: 1" = 20'

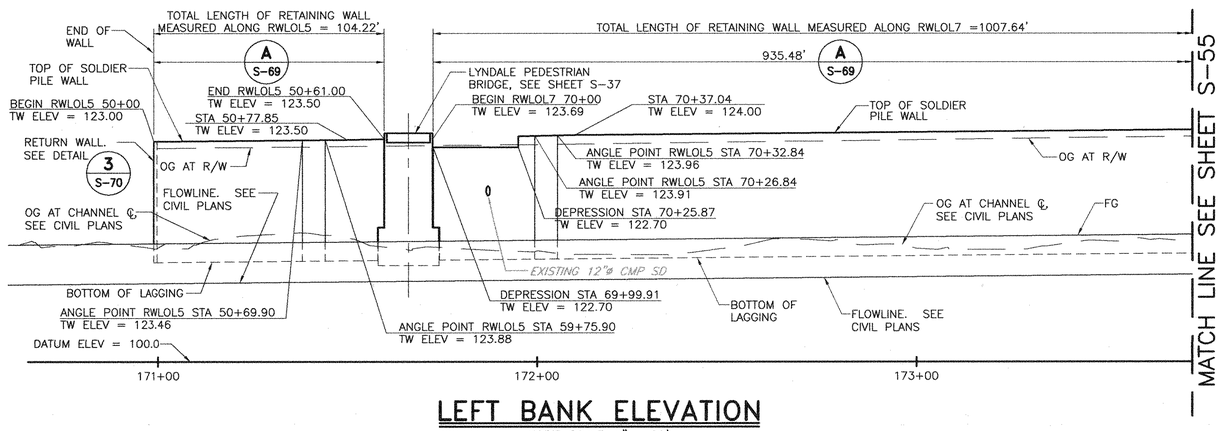

LEFT BANK ELEVATION

HORIZ SCALE: 1" = 20'
VERT SCALE: 1" = 8'

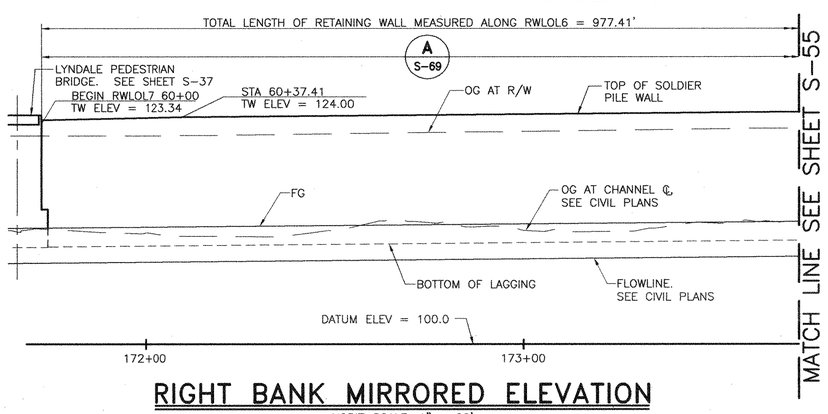

RIGHT BANK MIRRORED ELEVATION

HORIZ SCALE: 1" = 20'
VERT SCALE: 1" = 8'

NOTES:

1. FOR DRILLED PIER WALL DETAIL SHEETS, SEE S-67 & S-70.
2. FOR SOLDIER PILE WALL DETAIL SHEETS, SEE S-68, S-70 & S-71.
3. SEE CIVIL PLANS FOR EXISTING UTILITY SIZES, LOCATIONS & ELEVATIONS.
4. FOR PIPE PENETRATIONS AT DRILLED PIER OR SOLDIER PILE WALLS, SEE SHEET S-71
5. LEFT AND RIGHT BANK ELEVATIONS ARE PROJECTED FROM THE 'LSC' LINE. HORIZONTAL DIMENSIONS ON ELEVATIONS SHOULD NOT BE SCALED.
6. FOR ADDITIONAL LAYOUT AND PROFILE INFORMATION NOT NOTED, SEE 'CIVIL PLANS'.
7. TOP OF WALL PROFILES ARE LINEAR BETWEEN POINTS SHOWN UNLESS NOTED OTHERWISE.
8. TOP AND BOTTOM OF PILE CAP ARE LEVEL BETWEEN ELEVATION POINTS SHOWN UNLESS NOTED OTHERWISE
9. CONTRACTOR SHALL VERIFY AND ADJUST PILE CAP ELEVATIONS TO MAINTAIN MINIMUM DEPTH PER DETAIL 2 / S-67

REV	DESCRIPTION	DATE	APPR.	REFERENCE INFORMATION AND NOTES

BIGGS CARDOSA ASSOCIATES INC
STRUCTURAL ENGINEERS
865 The Alameda
San Jose, California 95126
408-296-5515
BCA

DATE	05-18-10
DESIGN	D.L.L.
DRAWN	S.M.H.
CHECKED	A.P.N.

ENGINEERING CERTIFICATION
REGISTERED PROFESSIONAL ENGINEER — ANDREW M. FARRAR — No. 2639 — Exp. 12/31/10 — STRUCTURAL — STATE OF CALIFORNIA
PROJECT ENGINEER — DATE 5/18/10

Santa Clara Valley Water District
ACCEPTED BY DISTRICT
Dennis Cheung — 6/1/10
PROJECT ENGINEER — DATE

PROJECT NAME AND SHEET DESCRIPTION:
LOWER SILVER CREEK REACHES 4, 5 & 6A
PLAN AND ELEVATION STA 171+30 TO 173+73

SCALE: AS SHOWN
VERIFY SCALES: 0 — 1"
BAR IS ONE INCH ON ORIGINAL DRAWING IF NOT ONE INCH ON THIS SHEET, ADJUST SCALES ACCORDINGLY

PROJECT NUMBER: 40264008
SHEET CODE: S-54
PAGE NUMBER: 138 OF 188

DOCUMENT NUMBER: CAD_XX-X-XXXX-XXXXX
FILENAME: W:\2001\2001093A\2001093AS54
4026 - 43129

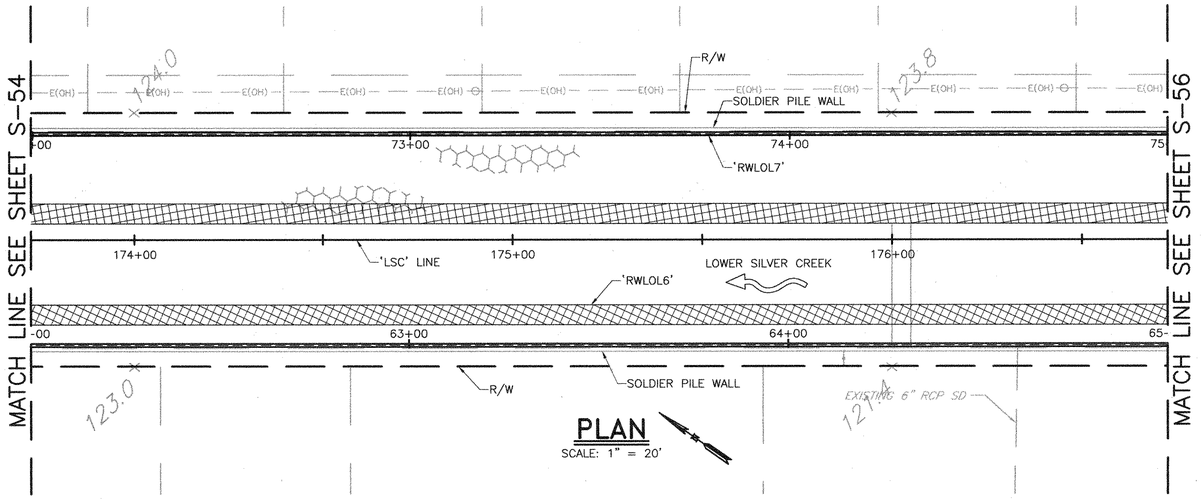

PLAN

SCALE: 1" = 20'

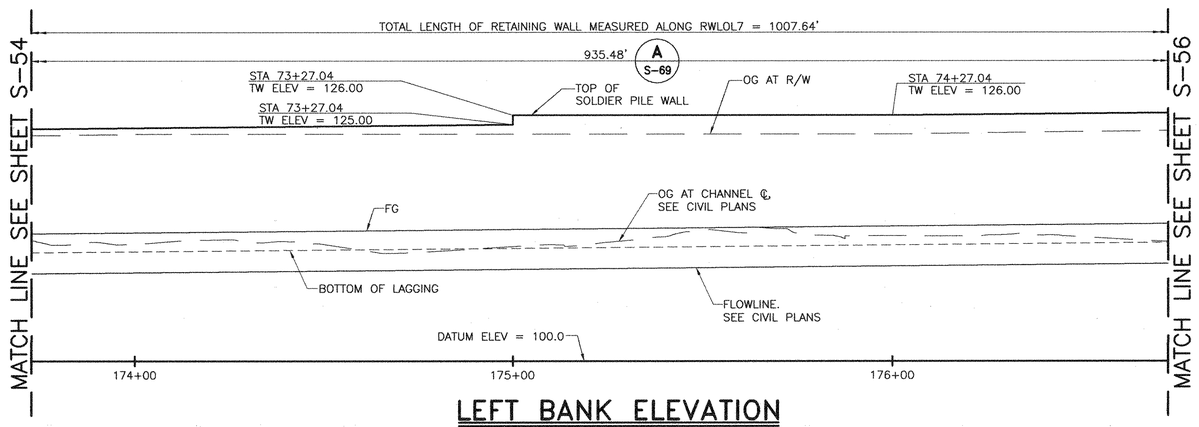

LEFT BANK ELEVATION

HORIZ SCALE: 1" = 20'
VERT SCALE: 1" = 8'

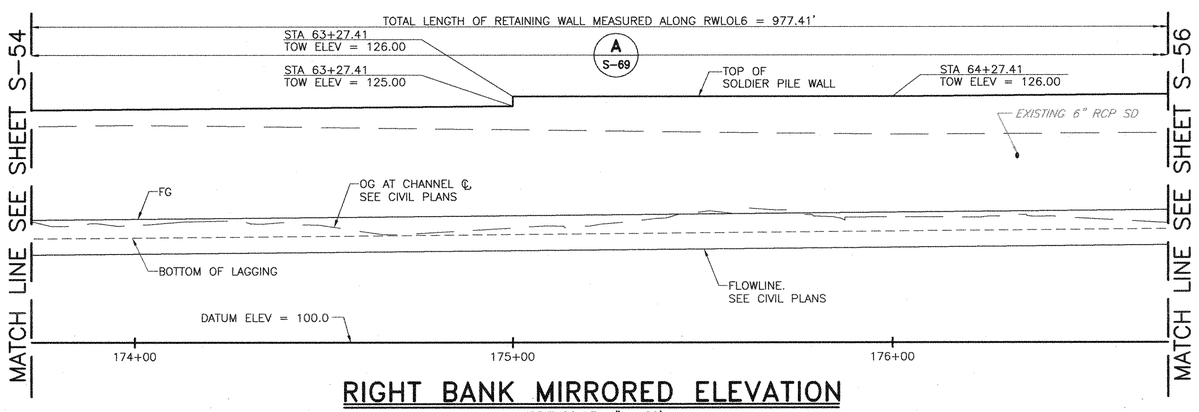

RIGHT BANK MIRRORED ELEVATION

HORIZ SCALE: 1" = 20'
VERT SCALE: 1" = 8'

NOTES:

1. FOR DRILLED PIER WALL DETAIL SHEETS, SEE S-67 & S-70.
2. FOR SOLDIER PILE WALL DETAIL SHEETS, SEE S-68, S-70 & S-71.
3. SEE CIVIL PLANS FOR EXISTING UTILITY SIZES, LOCATIONS & ELEVATIONS.
4. FOR PIPE PENETRATIONS AT DRILLED PIER OR SOLDIER PILE WALLS, SEE SHEET S-71
5. LEFT AND RIGHT BANK ELEVATIONS ARE PROJECTED FROM THE 'LSC' LINE. HORIZONTAL DIMENSIONS ON ELEVATIONS SHOULD NOT BE SCALED.
6. FOR ADDITIONAL LAYOUT AND PROFILE INFORMATION NOT NOTED, SEE 'CIVIL PLANS'.
7. TOP OF WALL PROFILES ARE LINEAR BETWEEN POINTS SHOWN UNLESS NOTED OTHERWISE.
8. TOP AND BOTTOM OF PILE CAP ARE LEVEL BETWEEN ELEVATION POINTS SHOWN UNLESS NOTED OTHERWISE
9. CONTRACTOR SHALL VERIFY AND ADJUST PILE CAP ELEVATIONS TO MAINTAIN MINIMUM DEPTH

PER DETAIL 2 / S-67

REV	DESCRIPTION	DATE	APPR.	REFERENCE INFORMATION AND NOTES

BIGGS CARDOSA ASSOCIATES INC
STRUCTURAL ENGINEERS
865 The Alameda
San Jose, California 95126
408-296-5515
BCA

DATE	
05-18-10	
DESIGN	D.L.L.
DRAWN	S.M.H.
CHECKED	A.P.N.

ENGINEERING CERTIFICATION
REGISTERED PROFESSIONAL ENGINEER SHASH M HATKOLE No. 2639 Exp. 12/31/10 STRUCTURAL STATE OF CALIFORNIA
5/18/10
PROJECT ENGINEER DATE

Santa Clara Valley Water District
ACCEPTED BY DISTRICT
Dennis Cheong 6/1/10
PROJECT ENGINEER DATE

PROJECT NAME AND SHEET DESCRIPTION:
LOWER SILVER CREEK REACHES 4, 5 & 6A
PLAN AND ELEVATION STA 173+73 TO 176+72

SCALE: AS SHOWN
VERIFY SCALES 0 1"
BAR IS ONE INCH ON ORIGINAL DRAWING IF NOT ONE INCH ON THIS SHEET, ADJUST SCALES ACCORDINGLY

PROJECT NUMBER: 40264008
SHEET CODE: S-55
PAGE NUMBER: 139 OF 188

DOCUMENT NUMBER: CAD_XX-X-XXXX-XXXXX
FILENAME: W:\2001\2001093A\2001093AS55
4026 - 43130

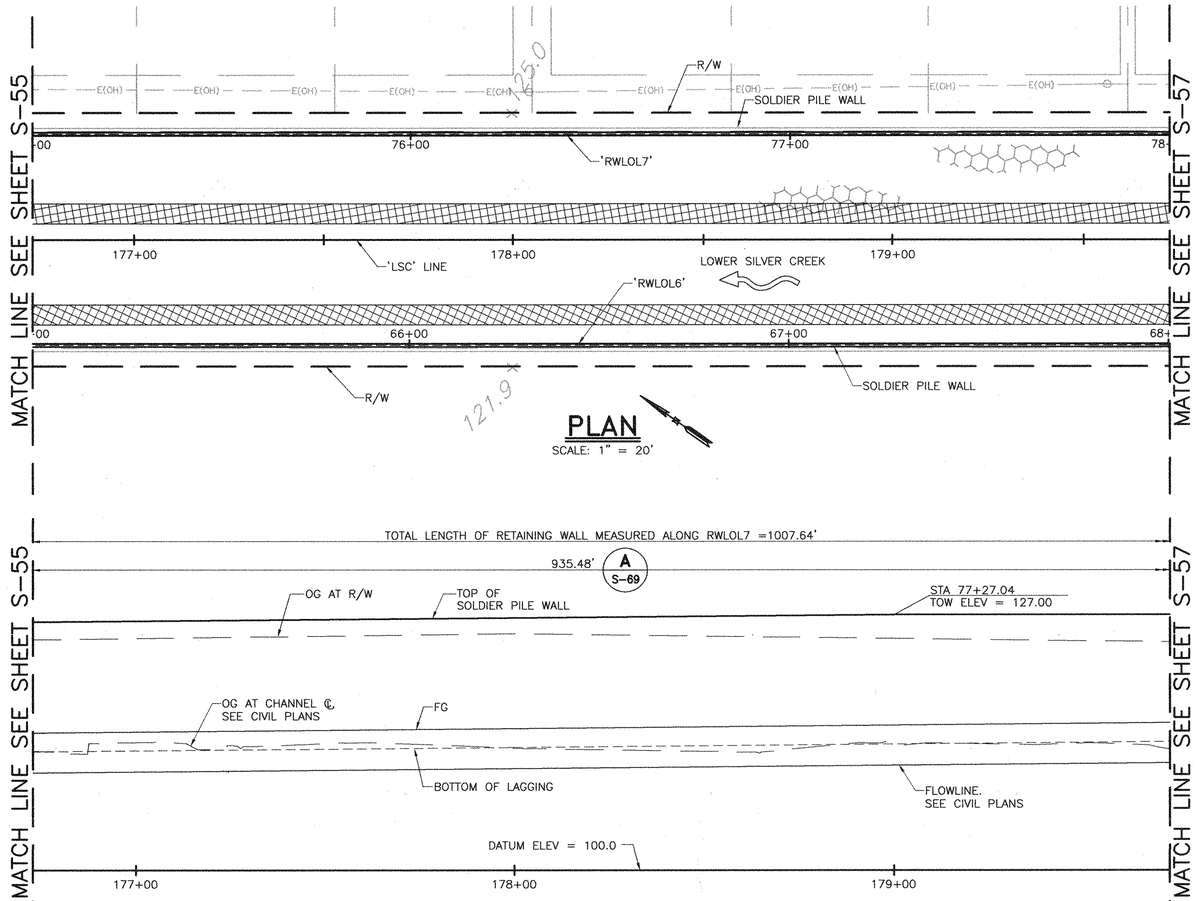

PLAN

SCALE: 1" = 20'

LEFT BANK ELEVATION

HORIZ SCALE: 1" = 20'
VERT SCALE: 1" = 8'

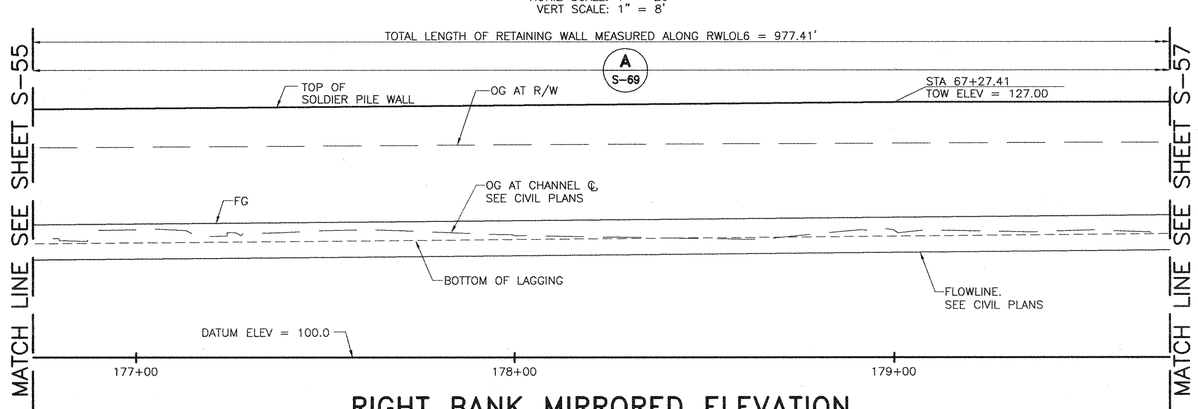

RIGHT BANK MIRRORED ELEVATION

HORIZ SCALE: 1" = 20'
VERT SCALE: 1" = 8'

NOTES:

1. FOR DRILLED PIER WALL DETAIL SHEETS, SEE S-67 & S-70.
2. FOR SOLDIER PILE WALL DETAIL SHEETS, SEE S-68, S-70 & S-71.
3. SEE CIVIL PLANS FOR EXISTING UTILITY SIZES, LOCATIONS & ELEVATIONS.
4. FOR PIPE PENETRATIONS AT DRILLED PIER OR SOLDIER PILE WALLS, SEE SHEET S-71
5. LEFT AND RIGHT BANK ELEVATIONS ARE PROJECTED FROM THE 'LSC' LINE. HORIZONTAL DIMENSIONS ON ELEVATIONS SHOULD NOT BE SCALED.
6. FOR ADDITIONAL LAYOUT AND PROFILE INFORMATION NOT NOTED, SEE 'CIVIL PLANS'.
7. TOP OF WALL PROFILES ARE LINEAR BETWEEN POINTS SHOWN UNLESS NOTED OTHERWISE.
8. TOP AND BOTTOM OF PILE CAP ARE LEVEL BETWEEN ELEVATION POINTS SHOWN UNLESS NOTED OTHERWISE
9. CONTRACTOR SHALL VERIFY AND ADJUST PILE CAP ELEVATIONS TO MAINTAIN MINIMUM DEPTH PER DETAIL 2/S-67

REV	DESCRIPTION	DATE	APPR.	REFERENCE INFORMATION AND NOTES

BIGGS CARDOSA ASSOCIATES INC
STRUCTURAL ENGINEERS
865 The Alameda
San Jose, California 95126
408-296-5515

DATE	05-18-10
DESIGN	D.L.L.
DRAWN	S.M.H.
CHECKED	A.P.N.

ENGINEERING CERTIFICATION
REGISTERED PROFESSIONAL ENGINEER ASHISH M. PARIKH No. 2639 Exp. 12/31/10 STRUCTURAL STATE OF CALIFORNIA
PROJECT ENGINEER — DATE 5/18/10

Santa Clara Valley Water District
ACCEPTED BY DISTRICT
Dennis Cheung 6/1/10
PROJECT ENGINEER — DATE

PROJECT NAME AND SHEET DESCRIPTION:

LOWER SILVER CREEK REACHES 4, 5 & 6A

PLAN AND ELEVATION STA 176+72 TO 179+72

SCALE: AS SHOWN
VERIFY SCALES: 0 — 1"
BAR IS ONE INCH ON ORIGINAL DRAWING IF NOT ONE INCH ON THIS SHEET, ADJUST SCALES ACCORDINGLY

PROJECT NUMBER: 40264008
SHEET CODE: S-56
PAGE NUMBER: 140 OF 188

DOCUMENT NUMBER: CAD_XX-X-XXXX-XXXXX
FILENAME: W:\2001\2001093A\2001093AS56
4026 - 4313

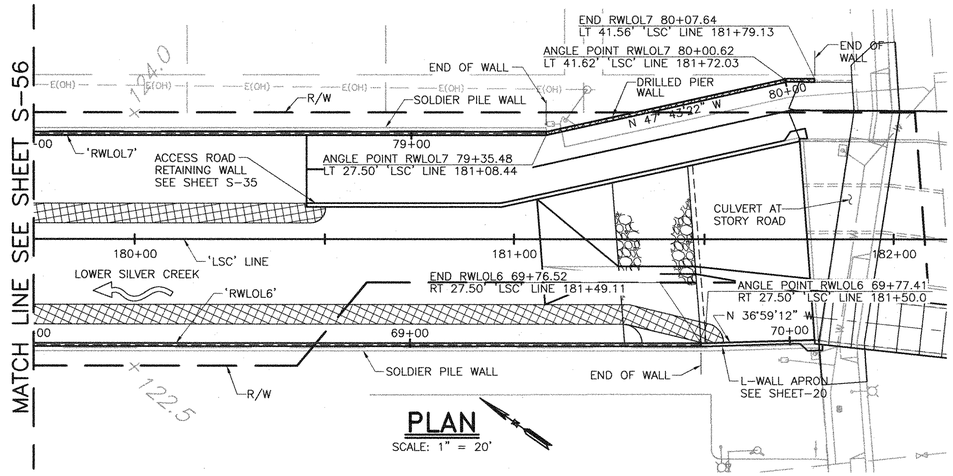

PLAN

SCALE: 1" = 20'

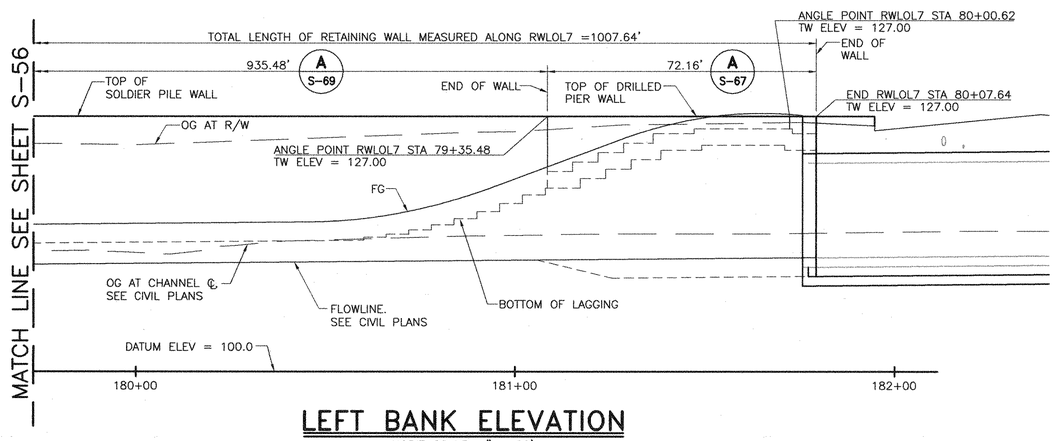

LEFT BANK ELEVATION

HORIZ SCALE: 1" = 20'
VERT SCALE: 1" = 8'

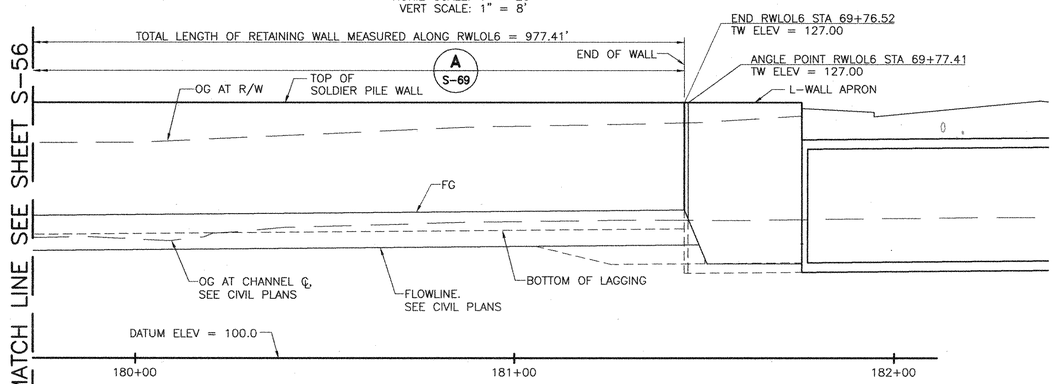

RIGHT BANK MIRRORED ELEVATION

HORIZ SCALE: 1" = 20'
VERT SCALE: 1" = 8'

NOTES:

1. FOR DRILLED PIER WALL DETAIL SHEETS, SEE S-67 & S-70.
2. FOR SOLDIER PILE WALL DETAIL SHEETS, SEE S-68, S-70 & S-71.
3. SEE CIVIL PLANS FOR EXISTING UTILITY SIZES, LOCATIONS & ELEVATIONS.
4. FOR PIPE PENETRATIONS AT DRILLED PIER OR SOLDIER PILE WALLS, SEE SHEET S-71
5. LEFT AND RIGHT BANK ELEVATIONS ARE PROJECTED FROM THE 'LSC' LINE. HORIZONTAL DIMENSIONS ON ELEVATIONS SHOULD NOT BE SCALED.
6. FOR ADDITIONAL LAYOUT AND PROFILE INFORMATION NOT NOTED, SEE 'CIVIL PLANS'.
7. TOP OF WALL PROFILES ARE LINEAR BETWEEN POINTS SHOWN UNLESS NOTED OTHERWISE.
8. TOP AND BOTTOM OF PILE CAP ARE LEVEL BETWEEN ELEVATION POINTS SHOWN UNLESS NOTED OTHERWISE
9. CONTRACTOR SHALL VERIFY AND ADJUST PILE CAP ELEVATIONS TO MAINTAIN MINIMUM DEPTH PER DETAIL 2/S-67

REV	DESCRIPTION	DATE	APPR.	REFERENCE INFORMATION AND NOTES

BIGGS CARDOSA ASSOCIATES INC
STRUCTURAL ENGINEERS
865 The Alameda
San Jose, California 95126
408-296-5515
BCA

DATE	05-18-10
DESIGN	D.L.L.
DRAWN	S.M.H.
CHECKED	A.P.N.

ENGINEERING CERTIFICATION
REGISTERED PROFESSIONAL ENGINEER ABDIAS M HAKIM No. 2639 Exp. 12/31/10 STRUCTURAL STATE OF CALIFORNIA
5/18/10
PROJECT ENGINEER DATE

Santa Clara Valley Water District
ACCEPTED BY DISTRICT
Dennis Chang 6/1/10
PROJECT ENGINEER DATE

PROJECT NAME AND SHEET DESCRIPTION:
LOWER SILVER CREEK REACHES 4, 5 & 6A
PLAN AND ELEVATION
STA 179+72 TO 182+00

SCALE: AS SHOWN
VERIFY SCALES 0 1"
BAR IS ONE INCH ON ORIGINAL DRAWING IF NOT ONE INCH ON THIS SHEET, ADJUST SCALES ACCORDINGLY

PROJECT NUMBER: 40264008
SHEET CODE: S-57
PAGE NUMBER: 141 OF 188

DOCUMENT NUMBER: CAD_XX-X-XXXX-XXXXX
FILENAME: W:\2001\200109A\200109ASS7
4026 - 43/32

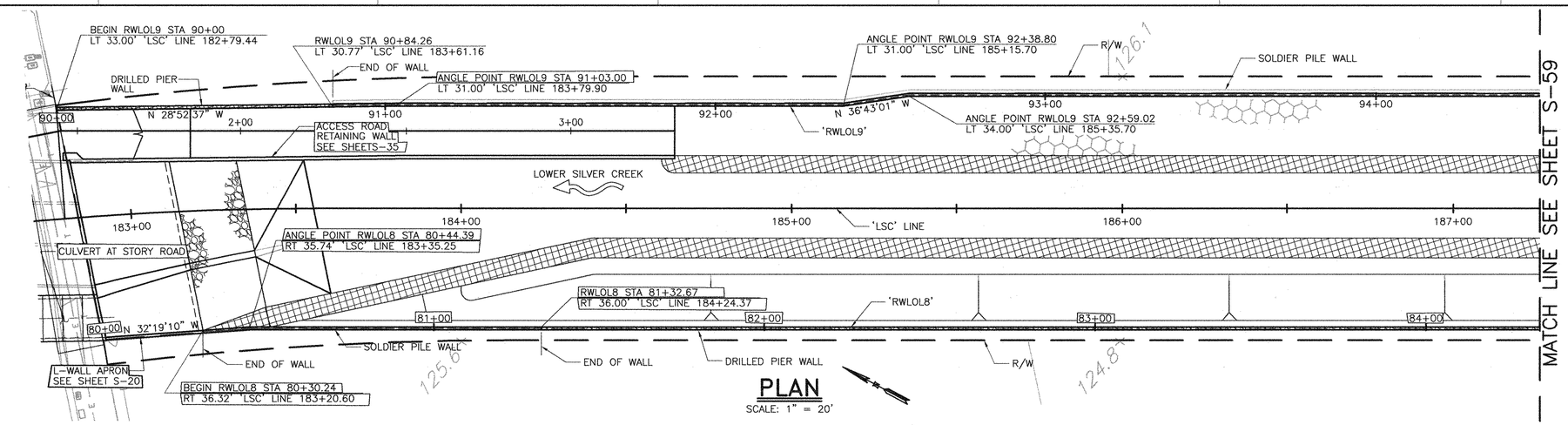

PLAN

SCALE: 1" = 20'

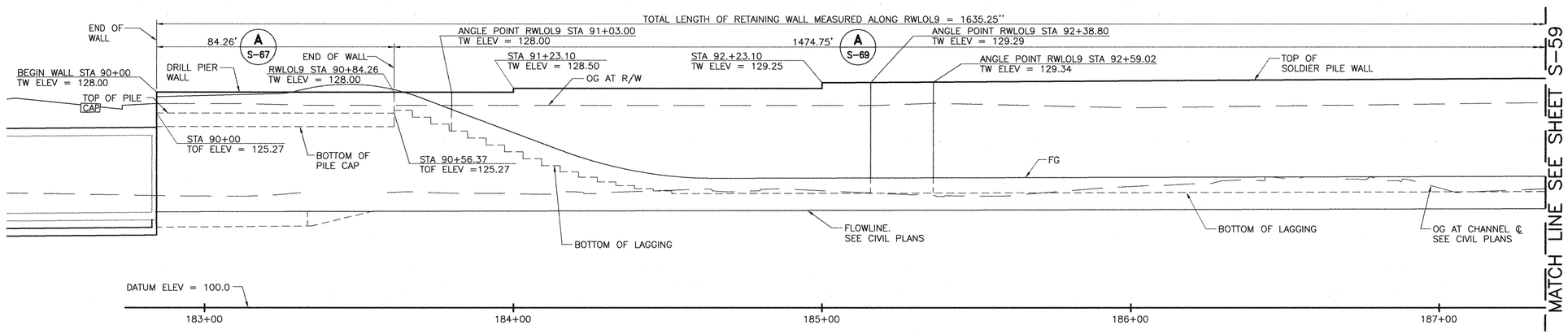

LEFT BANK ELEVATION

HORIZ SCALE: 1" = 20'
VERT SCALE: 1" = 8'

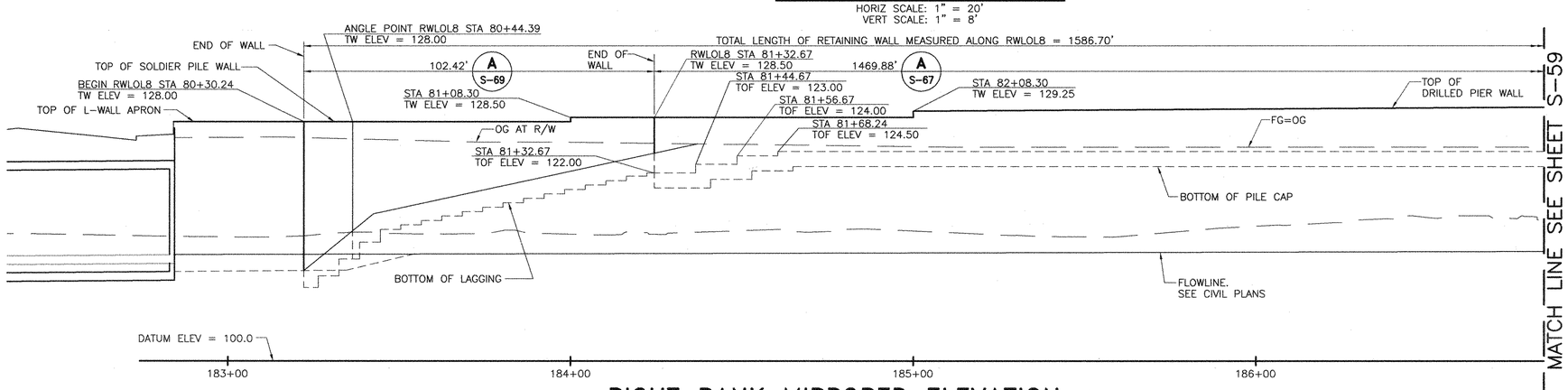

RIGHT BANK MIRRORED ELEVATION

HORIZ SCALE: 1" = 20'
VERT SCALE: 1" = 8'

NOTES:

1. FOR DRILLED PIER WALL DETAIL SHEETS, SEE S-67 & S-70.
2. FOR SOLDIER PILE WALL DETAIL SHEETS, SEE S-68, S-70 & S-71.
3. SEE CIVIL PLANS FOR EXISTING UTILITY SIZES, LOCATIONS & ELEVATIONS.
4. FOR PIPE PENETRATIONS AT DRILLED PIER OR SOLDIER PILE WALLS, SEE SHEET S-71
5. LEFT AND RIGHT BANK ELEVATIONS ARE PROJECTED FROM THE 'LSC' LINE. HORIZONTAL DIMENSIONS ON ELEVATIONS SHOULD NOT BE SCALED.
6. FOR ADDITIONAL LAYOUT AND PROFILE INFORMATION NOT NOTED, SEE 'CIVIL PLANS'.
7. TOP OF WALL PROFILES ARE LINEAR BETWEEN POINTS SHOWN UNLESS NOTED OTHERWISE.
8. TOP AND BOTTOM OF PILE CAP ARE LEVEL BETWEEN ELEVATION POINTS SHOWN UNLESS NOTED OTHERWISE
9. CONTRACTOR SHALL VERIFY AND ADJUST PILE CAP ELEVATIONS TO MAINTAIN MINIMUM DEPTH

PER DETAIL 2/S-67

REV	DESCRIPTION	DATE	APPR.	REFERENCE INFORMATION AND NOTES

BIGGS CARDOSA ASSOCIATES INC
STRUCTURAL ENGINEERS
865 The Alameda
San Jose, California 95126
408-296-5515
BCA

DATE	ENGINEERING CERTIFICATION
05-18-10	REGISTERED PROFESSIONAL ENGINEER — RAJESH M. RAHEJA — No. 2639 — Exp. 12/31/10 — STRUCTURAL — STATE OF CALIFORNIA
DESIGN D.L.L.	
DRAWN S.M.H.	
CHECKED A.P.N.	5/18/10 PROJECT ENGINEER DATE

Santa Clara Valley Water District

ACCEPTED BY DISTRICT

Dennis Cheung 6/1/10
PROJECT ENGINEER DATE

PROJECT NAME AND SHEET DESCRIPTION:

LOWER SILVER CREEK REACHES 4, 5 & 6A

PLAN AND ELEVATION STA 182+70 TO 187+27

SCALE: AS SHOWN

VERIFY SCALES 0 1"
BAR IS ONE INCH ON ORIGINAL DRAWING IF NOT ONE INCH ON THIS SHEET, ADJUST SCALES ACCORDINGLY

PROJECT NUMBER: 40264008

SHEET CODE: S-58

PAGE NUMBER: 142 OF 188

DOCUMENT NUMBER: CAD_XX-X-XXXX-XXXXX 4026-43133

FILENAME: W:\2001\2001093A\2001093AS58

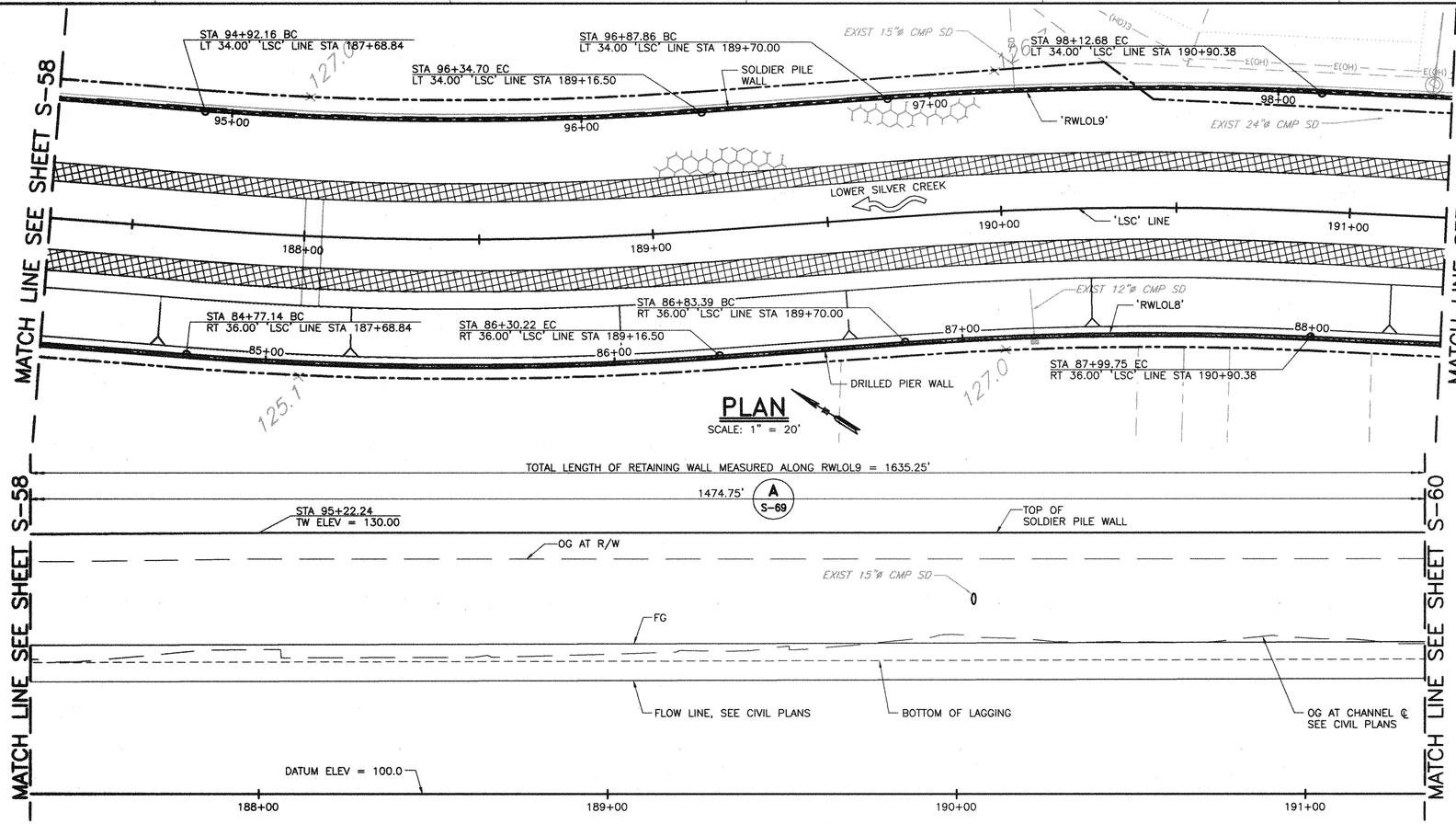

PLAN

SCALE: 1" = 20'

LEFT BANK ELEVATION

HORIZ SCALE: 1" = 20'
VERT SCALE: 1" = 8'

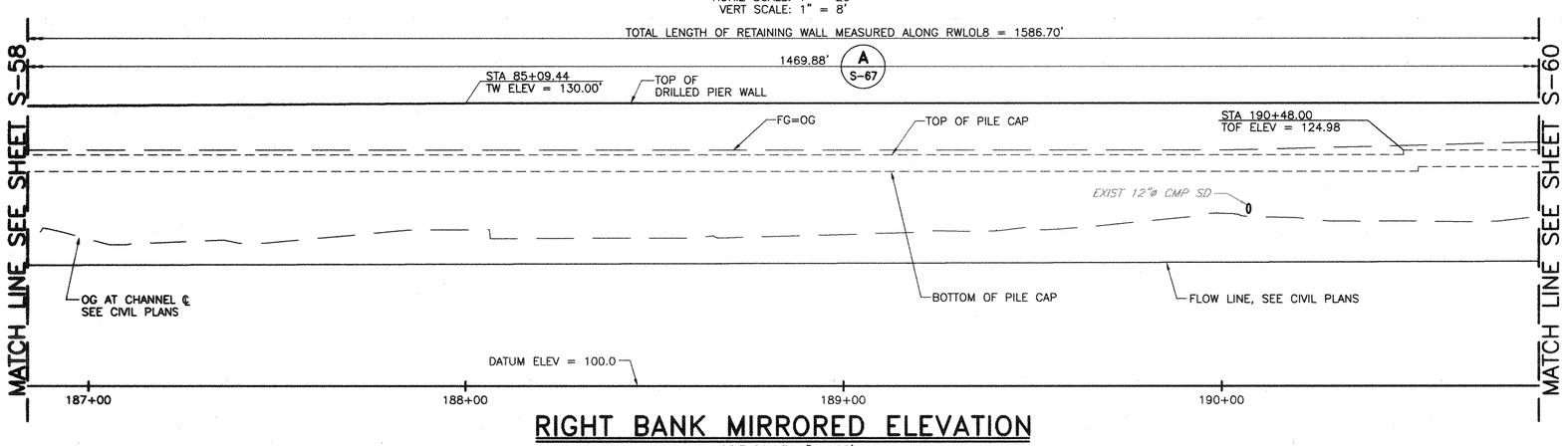

RIGHT BANK MIRRORED ELEVATION

HORIZ SCALE: 1" = 20'
VERT SCALE: 1" = 8'

NOTES:

1. FOR DRILLED PIER WALL DETAIL SHEETS, SEE S-67 & S-70.
2. FOR SOLDIER PILE WALL DETAIL SHEETS, SEE S-68, S-70 & S-71.
3. SEE CIVIL PLANS FOR EXISTING UTILITY SIZES, LOCATIONS & ELEVATIONS.
4. FOR PIPE PENETRATIONS AT DRILLED PIER OR SOLDIER PILE WALLS, SEE SHEET S-71
5. LEFT AND RIGHT BANK ELEVATIONS ARE PROJECTED FROM THE 'LSC' LINE. HORIZONTAL DIMENSIONS ON ELEVATIONS SHOULD NOT BE SCALED.
6. FOR ADDITIONAL LAYOUT AND PROFILE INFORMATION NOT NOTED, SEE 'CIVIL PLANS'.
7. TOP OF WALL PROFILES ARE LINEAR BETWEEN POINTS SHOWN UNLESS NOTED OTHERWISE.
8. TOP AND BOTTOM OF PILE CAP ARE LEVEL BETWEEN ELEVATION POINTS SHOWN UNLESS NOTED OTHERWISE
9. CONTRACTOR SHALL VERIFY AND ADJUST PILE CAP ELEVATIONS TO MAINTAIN MINIMUM DEPTH PER DETAIL 2/S-67

REV	DESCRIPTION	DATE	APPR.	REFERENCE INFORMATION AND NOTES

BIGGS CARDOSA ASSOCIATES INC
STRUCTURAL ENGINEERS
865 The Alameda
San Jose, California 95126
408-296-5515

DATE	ENGINEERING CERTIFICATION
05-18-10	REGISTERED PROFESSIONAL ENGINEER MARSH M HARRIS No. 2639 Exp. 12/31/10 STRUCTURAL STATE OF CALIFORNIA
DESIGN D.L.L.	
DRAWN S.M.H.	
CHECKED A.P.N.	5/18/10 PROJECT ENGINEER DATE

Santa Clara Valley Water District

ACCEPTED BY DISTRICT

Dennis Cheong 6/1/10
PROJECT ENGINEER DATE

PROJECT NAME AND SHEET DESCRIPTION:

LOWER SILVER CREEK REACHES 4, 5 & 6A

PLAN AND ELEVATION STA 187+27 TO 191+28

SCALE	PROJECT NUMBER
AS SHOWN	40264008
VERIFY SCALES 0 1" BAR IS ONE INCH ON ORIGINAL DRAWING IF NOT ONE INCH ON THIS SHEET, ADJUST SCALES ACCORDINGLY	SHEET CODE: S-59
	PAGE NUMBER: 143 OF 188

DOCUMENT NUMBER: CAD_XX-X-XXXX-XXXXX
FILENAME: W:\2001\2001093A\2001093AS59
4026-43139

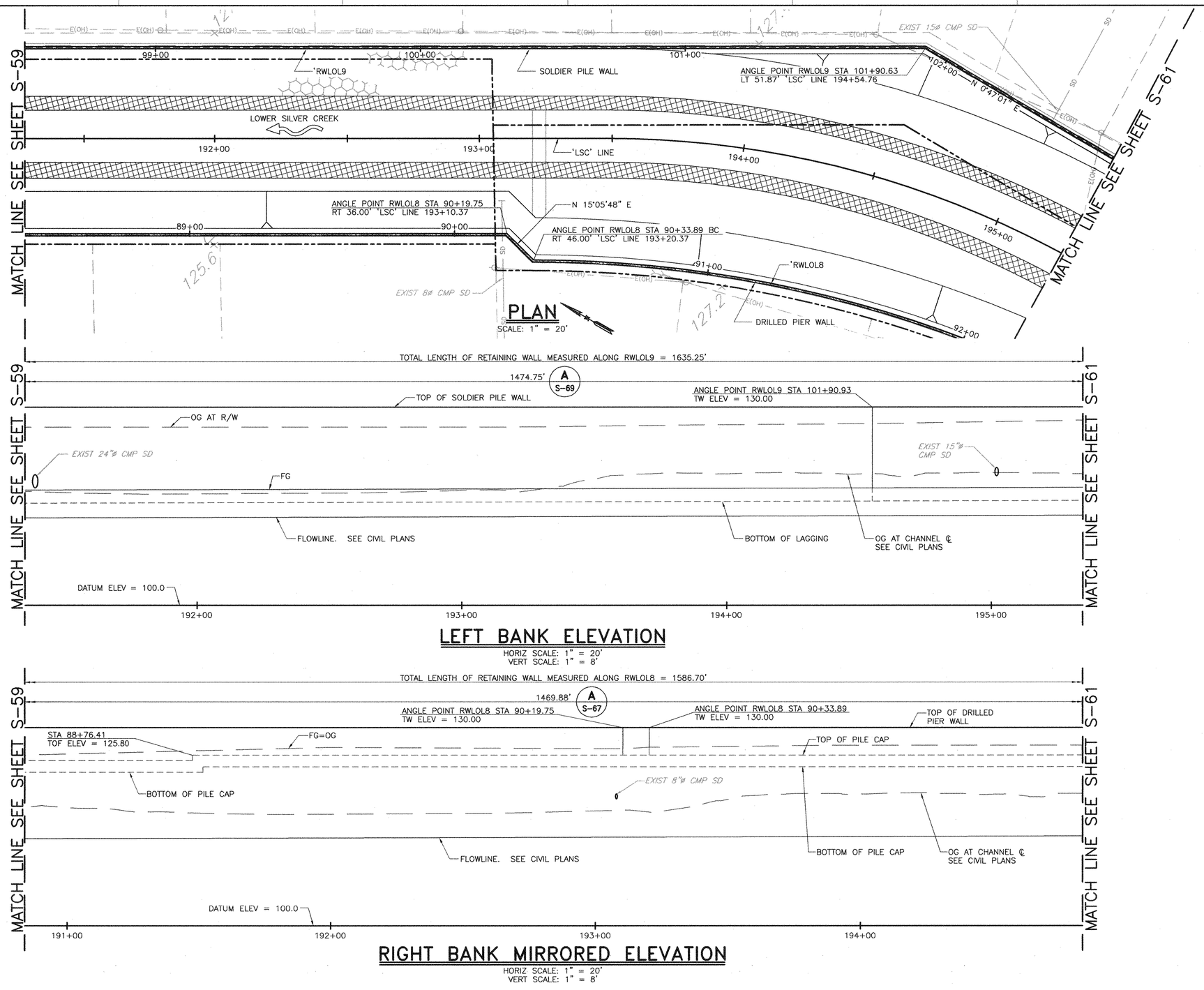

NOTES:

1. FOR DRILLED PIER WALL DETAIL SHEETS, SEE S-67 & S-70.
2. FOR SOLDIER PILE WALL DETAIL SHEETS, SEE S-68, S-70 & S-71.
3. SEE CIVIL PLANS FOR EXISTING UTILITY SIZES, LOCATIONS & ELEVATIONS.
4. FOR PIPE PENETRATIONS AT DRILLED PIER OR SOLDIER PILE WALLS, SEE SHEET S-71
5. LEFT AND RIGHT BANK ELEVATIONS ARE PROJECTED FROM THE 'LSC' LINE. HORIZONTAL DIMENSIONS ON ELEVATIONS SHOULD NOT BE SCALED.
6. FOR ADDITIONAL LAYOUT AND PROFILE INFORMATION NOT NOTED, SEE 'CIVIL PLANS'.
7. TOP OF WALL PROFILES ARE LINEAR BETWEEN POINTS SHOWN UNLESS NOTED OTHERWISE.
8. TOP AND BOTTOM OF PILE CAP ARE LEVEL BETWEEN ELEVATION POINTS SHOWN UNLESS NOTED OTHERWISE
9. CONTRACTOR SHALL VERIFY AND ADJUST PILE CAP ELEVATIONS TO MAINTAIN MINIMUM DEPTH PER DETAIL 2/S-67

REV	DESCRIPTION	DATE	APPR.	REFERENCE INFORMATION AND NOTES

BIGGS CARDOSA ASSOCIATES INC
STRUCTURAL ENGINEERS
865 The Alameda
San Jose, California 95126
408-296-5515
BCA

DATE	
05-18-10	DESIGN
D.L.L.	DRAWN
S.M.H.	CHECKED
A.P.N.	

ENGINEERING CERTIFICATION
REGISTERED PROFESSIONAL ENGINEER ASHISH M HIRANI No. 2639 Exp. 12/31/10 STRUCTURAL STATE OF CALIFORNIA
PROJECT ENGINEER 5/18/10 DATE

Santa Clara Valley Water District
ACCEPTED BY DISTRICT
Dennis Cheung 6/1/10
PROJECT ENGINEER DATE

PROJECT NAME AND SHEET DESCRIPTION:
LOWER SILVER CREEK REACHES 4, 5 & 6A
PLAN AND ELEVATION STA 191+28 TO 195+27

SCALE: AS SHOWN
VERIFY SCALES: 0 1" BAR IS ONE INCH ON ORIGINAL DRAWING IF NOT ONE INCH ON THIS SHEET, ADJUST SCALES ACCORDINGLY
PROJECT NUMBER: 40264008
SHEET CODE: S-60
PAGE NUMBER: 144 OF 188

DOCUMENT NUMBER: CAD_XX-X-XXXX-XXXXX
FILENAME: W:\2001\2001093A\2001093AS60
4026-43/35

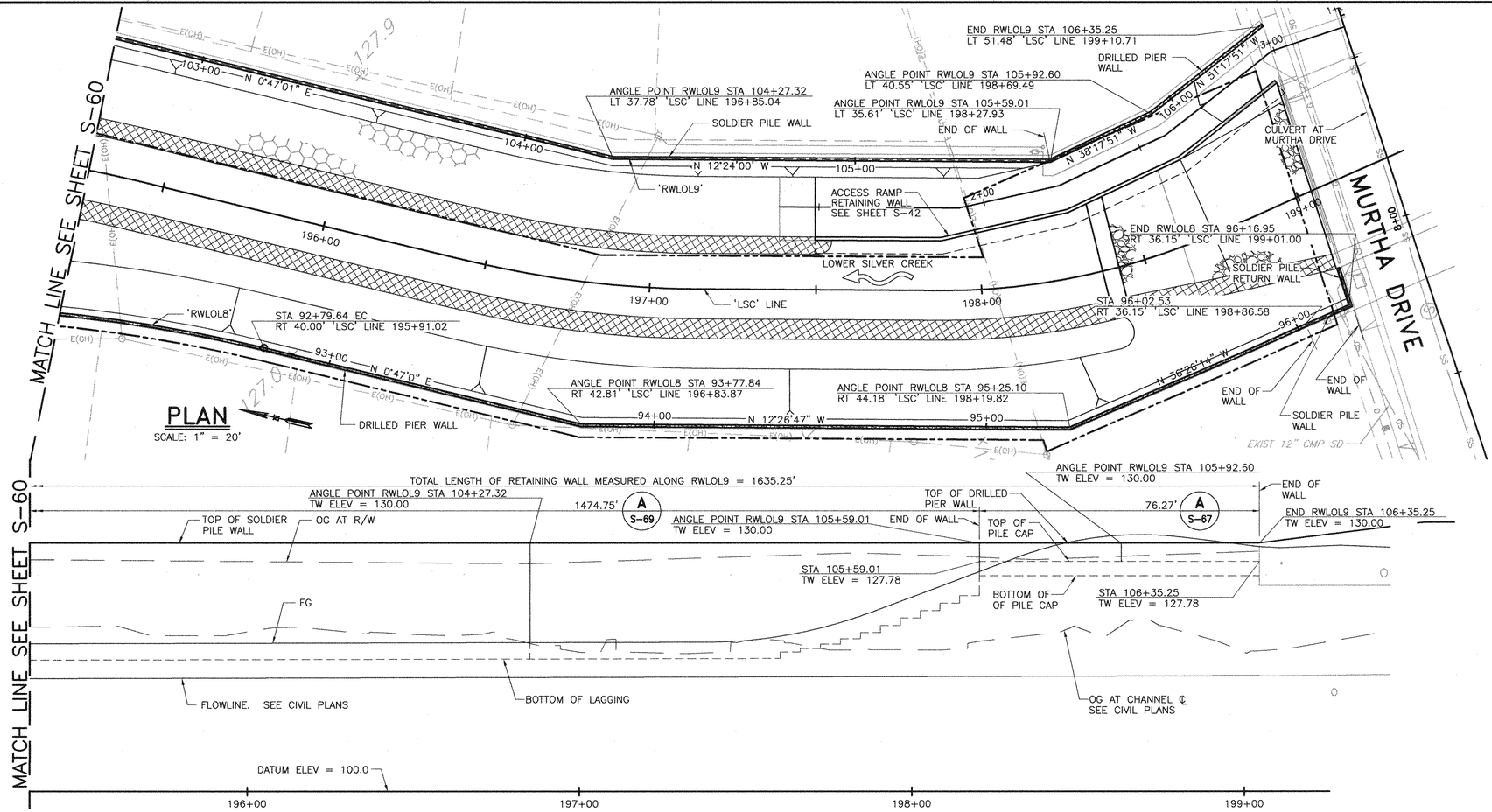

PLAN

SCALE: 1" = 20'

LEFT BANK ELEVATION

HORIZ SCALE: 1" = 20' VERT SCALE: 1" = 8'

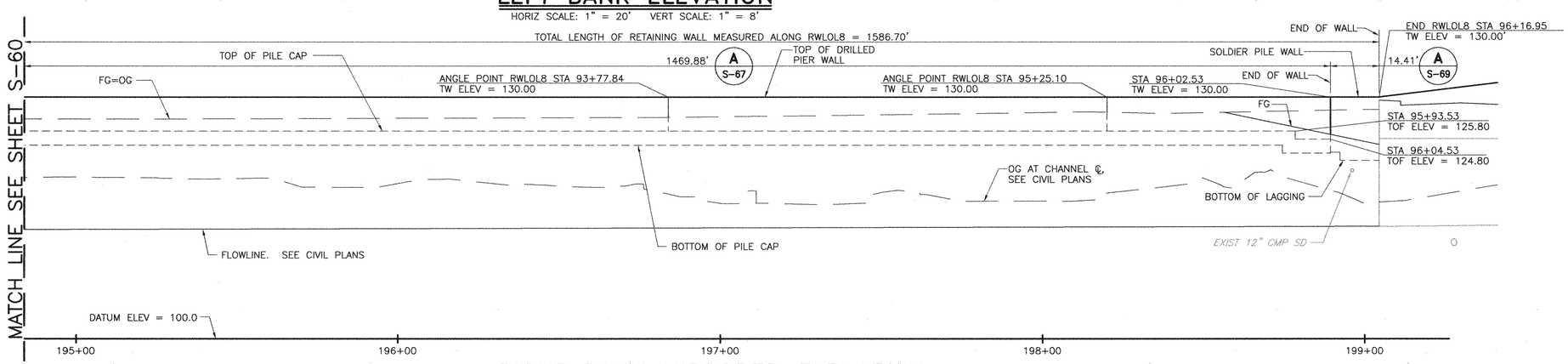

RIGHT BANK MIRRORED ELEVATION

HORIZ SCALE: 1" = 20' VERT SCALE: 1'-8'

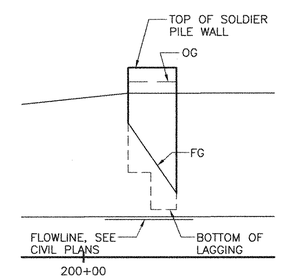

SOLDIER PILE RETURN WALL ELEVATION

HORIZ: 1" = 20'
VERT: 1" = 8'

NOTES:

1. FOR DRILLED PIER WALL DETAIL SHEETS, SEE S-67 & S-70.
2. FOR SOLDIER PILE WALL DETAIL SHEETS, SEE S-68, S-70 & S-71.
3. SEE CIVIL PLANS FOR EXISTING UTILITY SIZES, LOCATIONS & ELEVATIONS.
4. FOR PIPE PENETRATIONS AT DRILLED PIER OR SOLDIER PILE WALLS, SEE SHEET S-71
5. LEFT AND RIGHT BANK ELEVATIONS ARE PROJECTED FROM THE 'LSC' LINE. HORIZONTAL DIMENSIONS ON ELEVATIONS SHOULD NOT BE SCALED.
6. FOR ADDITIONAL LAYOUT AND PROFILE INFORMATION NOT NOTED, SEE 'CIVIL PLANS'.
7. TOP OF WALL PROFILES ARE LINEAR BETWEEN POINTS SHOWN UNLESS NOTED OTHERWISE.
8. TOP AND BOTTOM OF PILE CAP ARE LEVEL BETWEEN ELEVATION POINTS SHOWN UNLESS NOTED OTHERWISE
9. CONTRACTOR SHALL VERIFY AND ADJUST PILE CAP ELEVATIONS TO MAINTAIN MINIMUM DEPTH PER DETAIL 2/S-67

REV	DESCRIPTION	DATE	APPR.	REFERENCE INFORMATION AND NOTES

BIGGS CARDOSA ASSOCIATES INC
STRUCTURAL ENGINEERS
865 The Alameda
San Jose, California 95126
408-296-5515
BCA

DATE	05-18-10
DESIGN	D.L.L.
DRAWN	S.M.H.
CHECKED	A.P.N.

ENGINEERING CERTIFICATION
REGISTERED PROFESSIONAL ENGINEER MAYASH M HAMADA No. 2639 Exp. 12/31/10 STRUCTURAL STATE OF CALIFORNIA
PROJECT ENGINEER 5/18/10 DATE

Santa Clara Valley Water District
ACCEPTED BY DISTRICT
Dennis Cheung 6/1/10
PROJECT ENGINEER DATE

PROJECT NAME AND SHEET DESCRIPTION:
LOWER SILVER CREEK REACHES 4, 5 & 6A
PLAN AND ELEVATION STA 195+27 TO 199+35

SCALE: AS SHOWN
VERIFY SCALES: 0 1"
BAR IS ONE INCH ON ORIGINAL DRAWING IF NOT ONE INCH ON THIS SHEET, ADJUST SCALES ACCORDINGLY

PROJECT NUMBER: 40264008
SHEET CODE: S-61
PAGE NUMBER: 145 OF 188

DOCUMENT NUMBER: CAD_XX-X-XXXX-XXXXX
FILENAME: W:\2001\2001093A\2001093AS61
4026 - 93/36

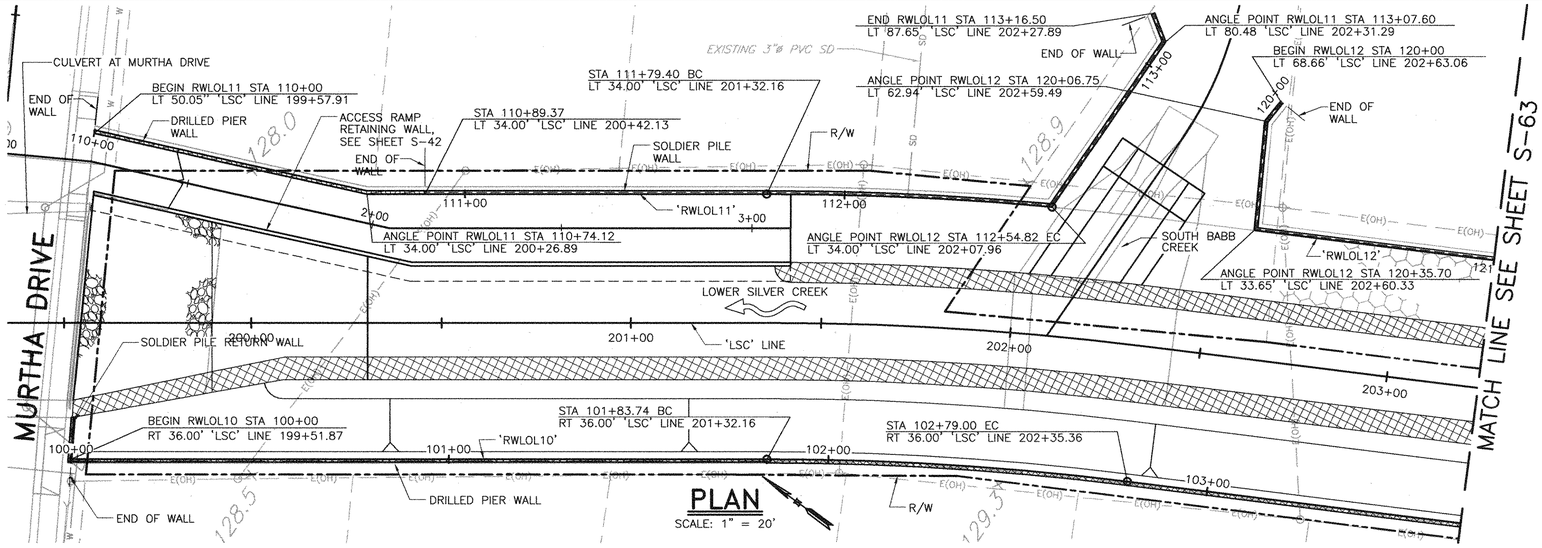

PLAN

SCALE: 1" = 20'

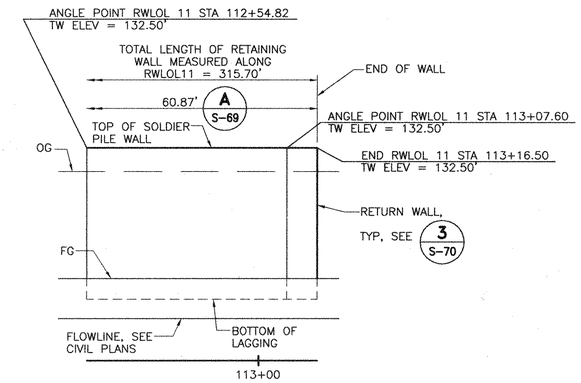

SOUTH BABB CREEK LEFT BANK ELEVATION

HORIZ SCALE: 1" = 20'
VERT SCALE: 1" = 8'

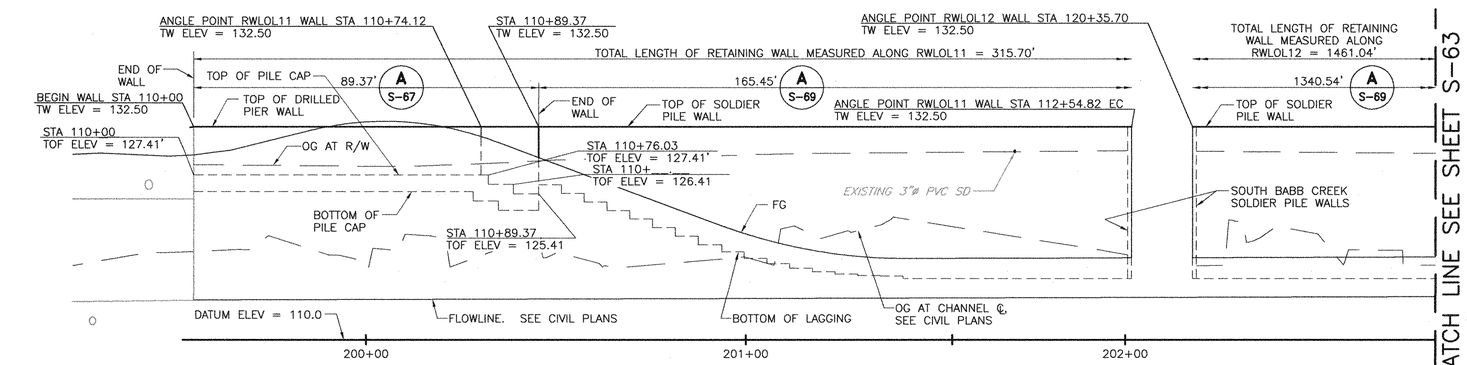

LEFT BANK ELEVATION

HORIZ SCALE: 1" = 20'
VERT SCALE: 1" = 8'

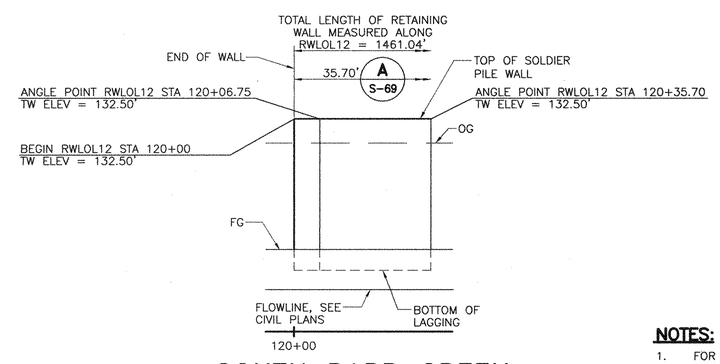

SOUTH BABB CREEK LEFT BANK ELEVATION

HORIZ SCALE: 1" = 20'
VERT SCALE: 1" = 8'

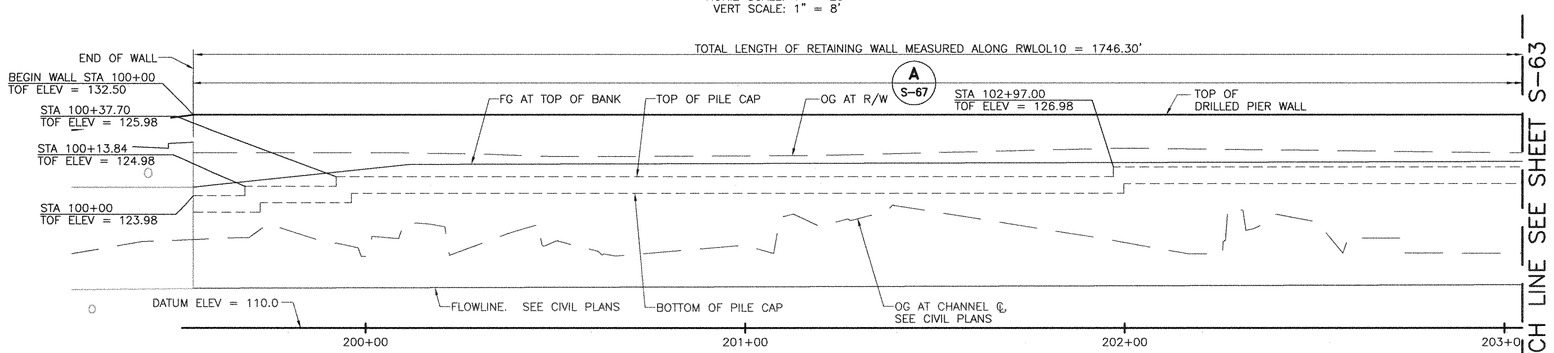

RIGHT BANK MIRRORED ELEVATION

HORIZ SCALE: 1" = 20'
VERT SCALE: 1" = 8'

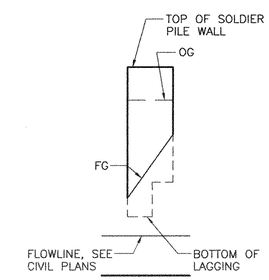

SOLDIER PILE RETURN WALL ELEVATIONS

HORIZ SCALE: 1" = 20'
VERT SCALE: 1" = 8'

NOTES:

1. FOR DRILLED PIER WALL DETAIL SHEETS, SEE S-67 & S-70.
2. FOR SOLDIER PILE WALL DETAIL SHEETS, SEE S-68, S-70 & S-71.
3. SEE CIVIL PLANS FOR EXISTING UTILITY SIZES, LOCATIONS & ELEVATIONS.
4. FOR PIPE PENETRATIONS AT DRILLED PIER OR SOLDIER PILE WALLS, SEE SHEET S-71
5. LEFT AND RIGHT BANK ELEVATIONS ARE PROJECTED FROM THE 'LSC' LINE. HORIZONTAL DIMENSIONS ON ELEVATIONS SHOULD NOT BE SCALED.
6. FOR ADDITIONAL LAYOUT AND PROFILE INFORMATION NOT NOTED, SEE 'CIVIL PLANS'.
7. TOP OF WALL PROFILES ARE LINEAR BETWEEN POINTS SHOWN UNLESS NOTED OTHERWISE.
8. TOP AND BOTTOM OF PILE CAP ARE LEVEL BETWEEN ELEVATION POINTS SHOWN UNLESS NOTED OTHERWISE
9. CONTRACTOR SHALL VERIFY AND ADJUST PILE CAP ELEVATIONS TO MAINTAIN MINIMUM DEPTH PER DETAIL 2 S-67

REV	DESCRIPTION	DATE	APPR.	REFERENCE INFORMATION AND NOTES

BIGGS CARDOSA ASSOCIATES INC
STRUCTURAL ENGINEERS
865 The Alameda
San Jose, California 95126
408-296-5515
BCA

DATE	05-18-10
DESIGN	D.L.L.
DRAWN	S.M.H.
CHECKED	
A.P.N.	

ENGINEERING CERTIFICATION
REGISTERED PROFESSIONAL ENGINEER SHASH M HANDE No. 2639 Exp. 12/31/10 STRUCTURAL STATE OF CALIFORNIA
PROJECT ENGINEER — DATE 5/18/10

Santa Clara Valley Water District
ACCEPTED BY DISTRICT
Dennis Cheong — 6/1/10
PROJECT ENGINEER — DATE

PROJECT NAME AND SHEET DESCRIPTION:

LOWER SILVER CREEK REACHES 4, 5 & 6A

PLAN AND ELEVATION STA 199+35 TO 203+24

SCALE	PROJECT NUMBER
AS SHOWN	40264008
VERIFY SCALES 0 — 1" BAR IS ONE INCH ON ORIGINAL DRAWING IF NOT ONE INCH ON THIS SHEET, ADJUST SCALES ACCORDINGLY	SHEET CODE: S-62
	PAGE NUMBER: 146 OF 188

DOCUMENT NUMBER: CAD_XX-X-XXXX-XXXXX
FILENAME: W:\2001\2001093A\2001093AS62
4026 - 43.37

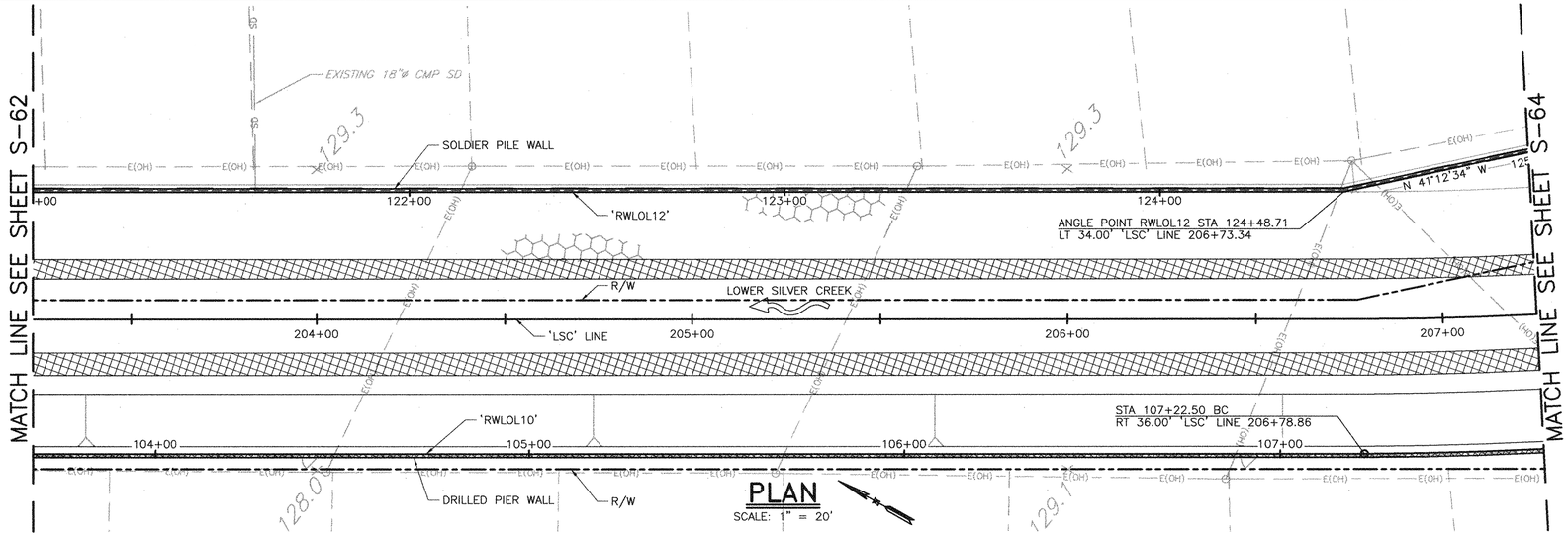

PLAN

SCALE: 1" = 20'

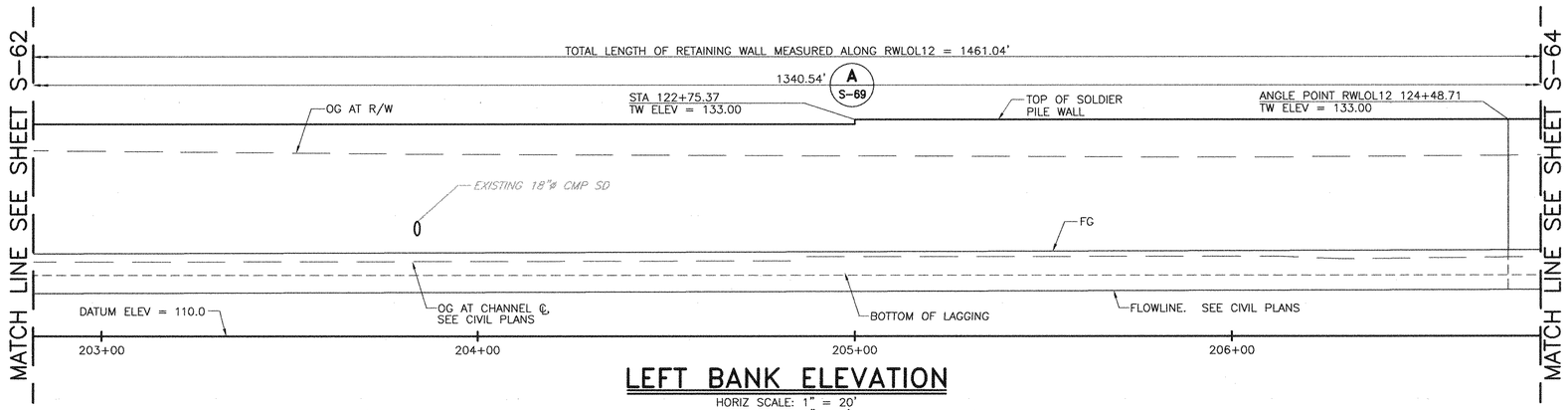

LEFT BANK ELEVATION

HORIZ SCALE: 1" = 20'
VERT SCALE: 1" = 8'

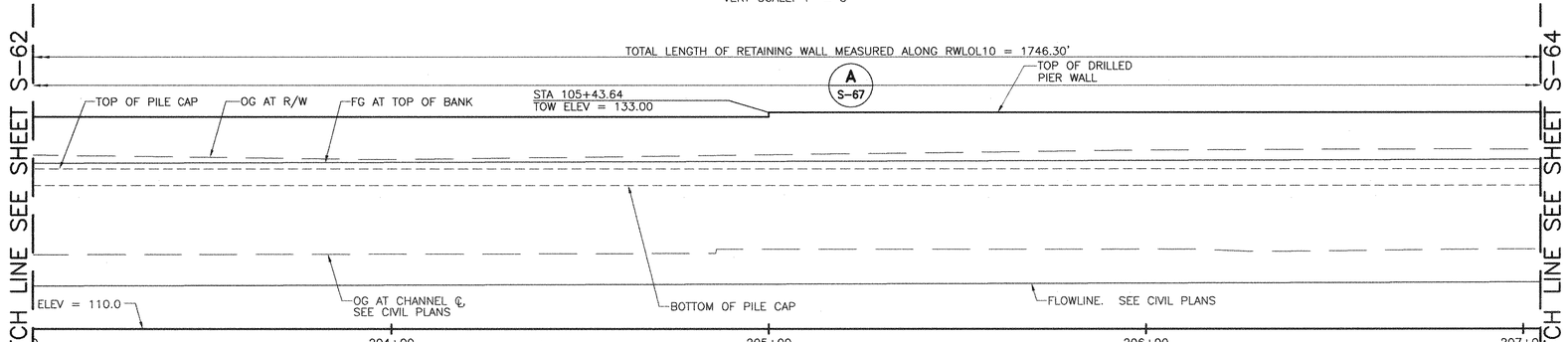

RIGHT BANK MIRRORED ELEVATION

HORIZ SCALE: 1" = 20'
VERT SCALE: 1" = 8'

NOTES:

1. FOR DRILLED PIER WALL DETAIL SHEETS, SEE S-67 & S-70.
2. FOR SOLDIER PILE WALL DETAIL SHEETS, SEE S-68, S-70 & S-71.
3. SEE CIVIL PLANS FOR EXISTING UTILITY SIZES, LOCATIONS & ELEVATIONS.
4. FOR PIPE PENETRATIONS AT DRILLED PIER OR SOLDIER PILE WALLS, SEE SHEET S-71
5. LEFT AND RIGHT BANK ELEVATIONS ARE PROJECTED FROM THE 'LSC' LINE. HORIZONTAL DIMENSIONS ON ELEVATIONS SHOULD NOT BE SCALED.
6. FOR ADDITIONAL LAYOUT AND PROFILE INFORMATION NOT NOTED, SEE 'CIVIL PLANS'.
7. TOP OF WALL PROFILES ARE LINEAR BETWEEN POINTS SHOWN UNLESS NOTED OTHERWISE.
8. TOP AND BOTTOM OF PILE CAP ARE LEVEL BETWEEN ELEVATION POINTS SHOWN UNLESS NOTED OTHERWISE
9. CONTRACTOR SHALL VERIFY AND ADJUST PILE CAP ELEVATIONS TO MAINTAIN MINIMUM DEPTH

PER DETAIL 2 / S-67

REV	DESCRIPTION	DATE	APPR.	REFERENCE INFORMATION AND NOTES

BIGGS CARDOSA ASSOCIATES INC
STRUCTURAL ENGINEERS
865 The Alameda
San Jose, California 95126
408-296-5515
BCA

DATE 05-18-10
DESIGN D.L.L.
DRAWN S.M.H.
CHECKED A.P.N.

ENGINEERING CERTIFICATION
REGISTERED PROFESSIONAL ENGINEER — ASHISH M. HATHIRAM — No. 2639 — Exp. 12/31/10 — STRUCTURAL — STATE OF CALIFORNIA
PROJECT ENGINEER 5/18/10 DATE

Santa Clara Valley Water District
ACCEPTED BY DISTRICT
Dennis Cheong 6/1/10
PROJECT ENGINEER DATE

PROJECT NAME AND SHEET DESCRIPTION:
LOWER SILVER CREEK REACHES 4, 5 & 6A
PLAN AND ELEVATION
STA 203+24 TO 207+25

SCALE: AS SHOWN
VERIFY SCALES: 0 — 1"
BAR IS ONE INCH ON ORIGINAL DRAWING IF NOT ONE INCH ON THIS SHEET, ADJUST SCALES ACCORDINGLY

PROJECT NUMBER: 40264008
SHEET CODE: S-63
PAGE NUMBER: 147 OF 188

DOCUMENT NUMBER: CAD_XX-X-XXXX-XXXXX
FILENAME: W:\2001\2001093A\2001093AS63
4026-43/38

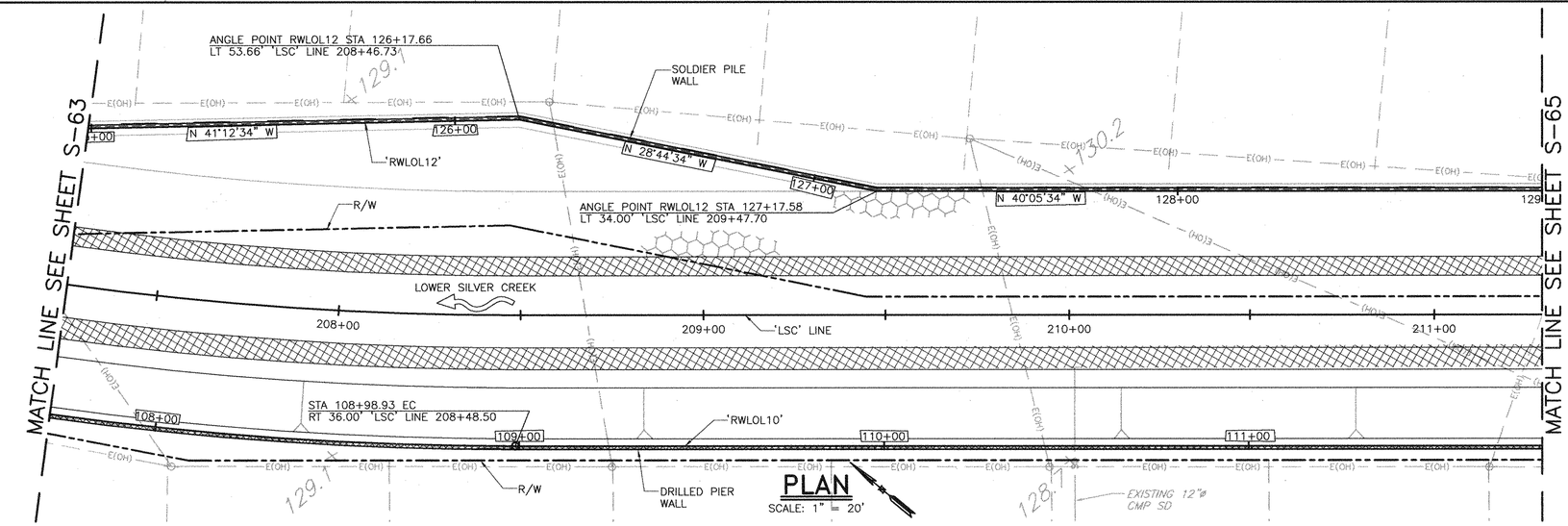

PLAN

SCALE: 1" = 20'

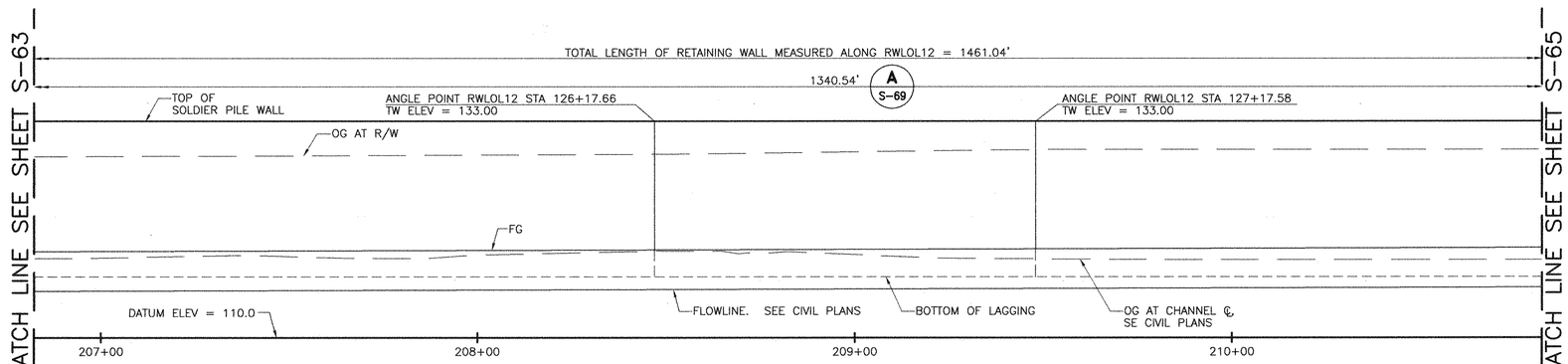

LEFT BANK ELEVATION

HORIZ SCALE: 1" = 20'
VERT SCALE: 1" = 8'

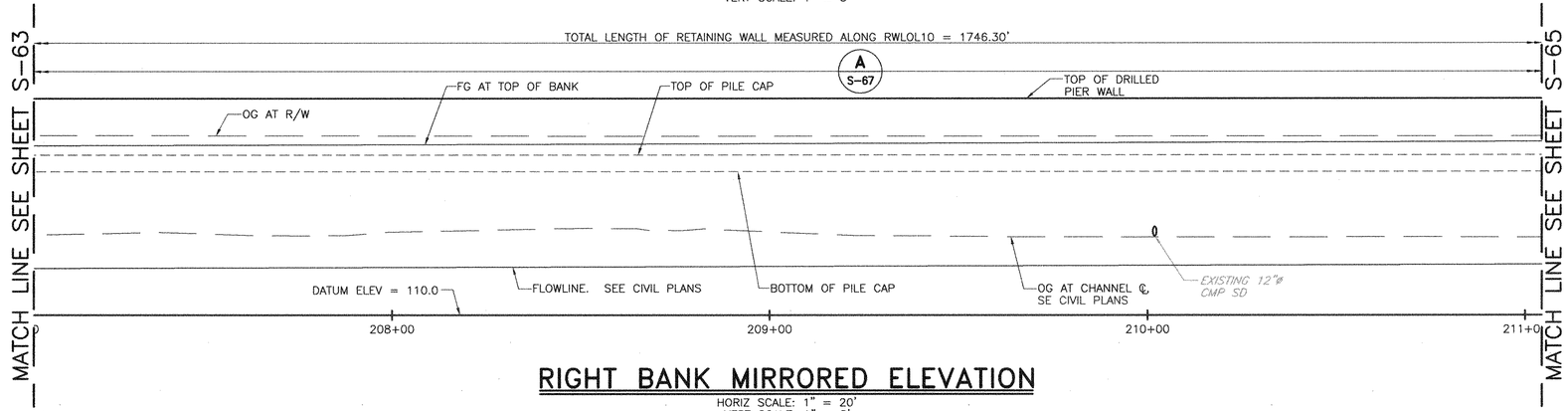

RIGHT BANK MIRRORED ELEVATION

HORIZ SCALE: 1" = 20'
VERT SCALE: 1" = 8'

NOTES:

1. FOR DRILLED PIER WALL DETAIL SHEETS, SEE S-67 & S-70.
2. FOR SOLDIER PILE WALL DETAIL SHEETS, SEE S-68, S-70 & S-71.
3. SEE CIVIL PLANS FOR EXISTING UTILITY SIZES, LOCATIONS & ELEVATIONS.
4. FOR PIPE PENETRATIONS AT DRILLED PIER OR SOLDIER PILE WALLS, SEE SHEET S-71
5. LEFT AND RIGHT BANK ELEVATIONS ARE PROJECTED FROM THE 'LSC' LINE. HORIZONTAL DIMENSIONS ON ELEVATIONS SHOULD NOT BE SCALED.
6. FOR ADDITIONAL LAYOUT AND PROFILE INFORMATION NOT NOTED, SEE 'CIVIL PLANS'.
7. TOP OF WALL PROFILES ARE LINEAR BETWEEN POINTS SHOWN UNLESS NOTED OTHERWISE.
8. TOP AND BOTTOM OF PILE CAP ARE LEVEL BETWEEN ELEVATION POINTS SHOWN UNLESS NOTED OTHERWISE
9. CONTRACTOR SHALL VERIFY AND ADJUST PILE CAP ELEVATIONS TO MAINTAIN MINIMUM DEPTH PER DETAIL 2/S-67

REV	DESCRIPTION	DATE	APPR.	REFERENCE INFORMATION AND NOTES

BIGGS CARDOSA ASSOCIATES INC
STRUCTURAL ENGINEERS
865 The Alameda
San Jose, California 95126
408-296-5515
BCA

DATE	
05-18-10	
DESIGN	D.L.L.
DRAWN	S.M.H.
CHECKED	A.P.N.

ENGINEERING CERTIFICATION
REGISTERED PROFESSIONAL ENGINEER — SHAHRIAR M. HATEFI — No. 2639 — Exp. 12/31/10 — STRUCTURAL — STATE OF CALIFORNIA
PROJECT ENGINEER — DATE 5/18/10

Santa Clara Valley Water District
ACCEPTED BY DISTRICT
PROJECT ENGINEER — DATE 6/1/10

PROJECT NAME AND SHEET DESCRIPTION:

LOWER SILVER CREEK REACHES 4, 5 & 6A

PLAN AND ELEVATION STA 207+25 TO 211+30

SCALE: AS SHOWN
VERIFY SCALES: 0 — 1"
BAR IS ONE INCH ON ORIGINAL DRAWING IF NOT ONE INCH ON THIS SHEET, ADJUST SCALES ACCORDINGLY

PROJECT NUMBER: 40264008
SHEET CODE: S-64
PAGE NUMBER: 148 OF 188

DOCUMENT NUMBER: CAD_XX-X-XXXX-XXXXX
FILENAME: W:\2001\2001093A\2001093AS64
9026 - 4/3/39

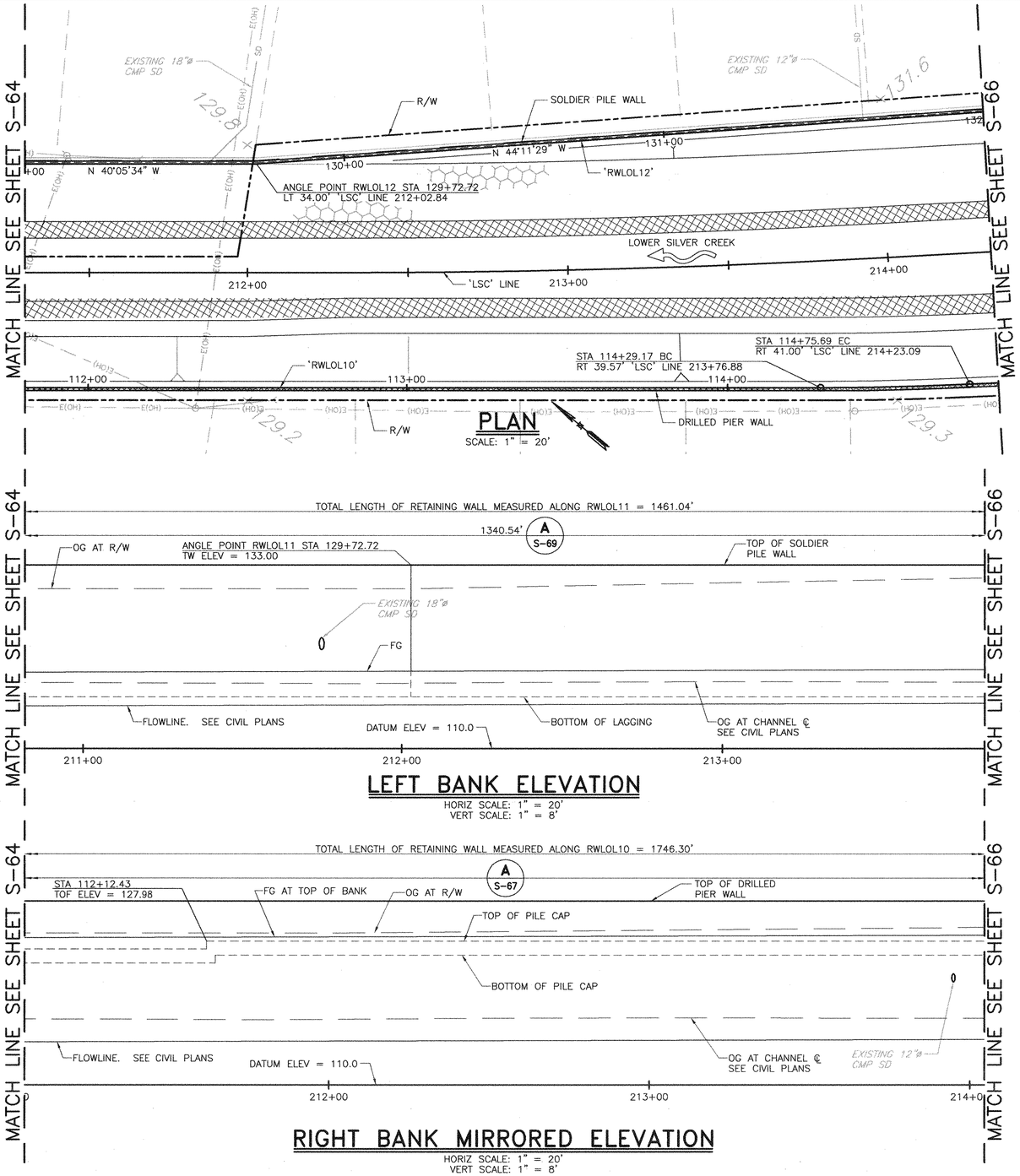

NOTES:

1. FOR DRILLED PIER WALL DETAIL SHEETS, SEE S-67 & S-70.
2. FOR SOLDIER PILE WALL DETAIL SHEETS, SEE S-68, S-70 & S-71.
3. SEE CIVIL PLANS FOR EXISTING UTILITY SIZES, LOCATIONS & ELEVATIONS.
4. FOR PIPE PENETRATIONS AT DRILLED PIER OR SOLDIER PILE WALLS, SEE SHEET S-71
5. LEFT AND RIGHT BANK ELEVATIONS ARE PROJECTED FROM THE 'LSC' LINE. HORIZONTAL DIMENSIONS ON ELEVATIONS SHOULD NOT BE SCALED.
6. FOR ADDITIONAL LAYOUT AND PROFILE INFORMATION NOT NOTED, SEE 'CIVIL PLANS'.
7. TOP OF WALL PROFILES ARE LINEAR BETWEEN POINTS SHOWN UNLESS NOTED OTHERWISE.
8. TOP AND BOTTOM OF PILE CAP ARE LEVEL BETWEEN ELEVATION POINTS SHOWN UNLESS NOTED OTHERWISE
9. CONTRACTOR SHALL VERIFY AND ADJUST PILE CAP ELEVATIONS TO MAINTAIN MINIMUM DEPTH

PER DETAIL 2 / S-67

REV	DESCRIPTION	DATE	APPR.	REFERENCE INFORMATION AND NOTES

BIGGS CARDOSA ASSOCIATES INC
STRUCTURAL ENGINEERS
865 The Alameda
San Jose, California 95126
408-296-5515

DATE	ENGINEERING CERTIFICATION
05-18-10	REGISTERED PROFESSIONAL ENGINEER MAHASTI M HATAMI No. 2639 Exp. 12/31/10 STRUCTURAL STATE OF CALIFORNIA 5/18/10
DESIGN D.L.L.	PROJECT ENGINEER DATE
DRAWN S.M.H.	
CHECKED A.P.N.	

Santa Clara Valley Water District

ACCEPTED BY DISTRICT

Dennis Cheung 6/1/10

PROJECT ENGINEER DATE

PROJECT NAME AND SHEET DESCRIPTION:

LOWER SILVER CREEK REACHES 4, 5 & 6A

PLAN AND ELEVATION STA 211+30 TO 214+32

SCALE: AS SHOWN

VERIFY SCALES: 0 — 1"
BAR IS ONE INCH ON ORIGINAL DRAWING IF NOT ONE INCH ON THIS SHEET, ADJUST SCALES ACCORDINGLY

PROJECT NUMBER: 40264008

SHEET CODE: S-65

PAGE NUMBER: 149 OF 188

DOCUMENT NUMBER: CAD_XX-X-XXXX-XXXXX

FILENAME: W:\2001\2001093A\2001093AS65

4026 - 43/90

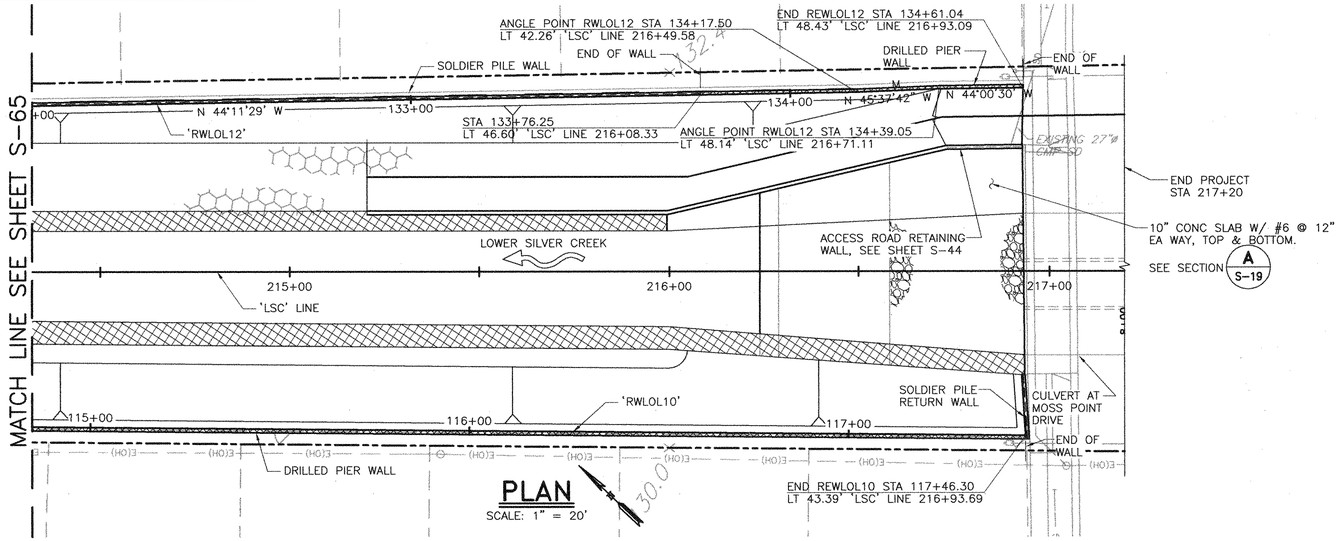

PLAN

SCALE: 1" = 20'

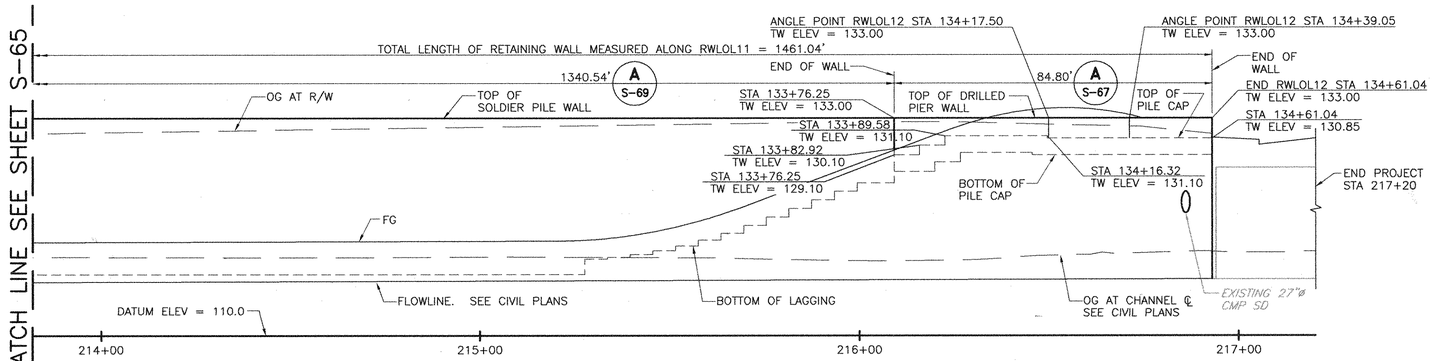

LEFT BANK ELEVATION

HORIZ SCALE: 1" = 20'
VERT SCALE: 1" = 8'

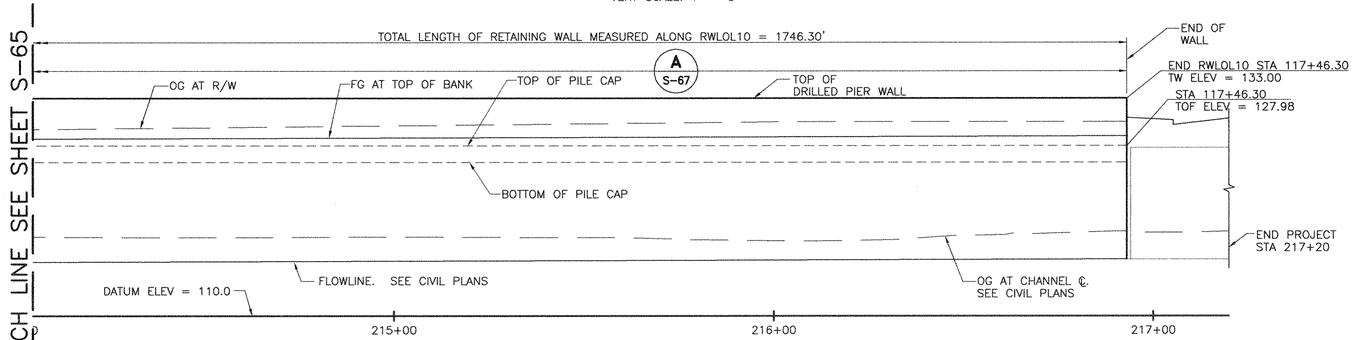

RIGHT BANK MIRRORED ELEVATION

HORIZ SCALE: 1" = 20'
VERT SCALE: 1" = 8'

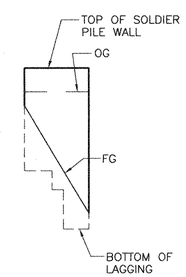

SOLDIER PILE RETURN WALL ELEVATION

HORIZ SCALE: 1" = 20'
VERT SCALE: 1" = 8'

NOTES:

1. FOR DRILLED PIER WALL DETAIL SHEETS, SEE S-67 & S-70.
2. FOR SOLDIER PILE WALL DETAIL SHEETS, SEE S-68, S-70 & S-71.
3. SEE CIVIL PLANS FOR EXISTING UTILITY SIZES, LOCATIONS & ELEVATIONS.
4. FOR PIPE PENETRATIONS AT DRILLED PIER OR SOLDIER PILE WALLS, SEE SHEET S-71
5. LEFT AND RIGHT BANK ELEVATIONS ARE PROJECTED FROM THE 'LSC' LINE. HORIZONTAL DIMENSIONS ON ELEVATIONS SHOULD NOT BE SCALED.
6. FOR ADDITIONAL LAYOUT AND PROFILE INFORMATION NOT NOTED, SEE 'CIVIL PLANS'.
7. TOP OF WALL PROFILES ARE LINEAR BETWEEN POINTS SHOWN UNLESS NOTED OTHERWISE.
8. TOP AND BOTTOM OF PILE CAP ARE LEVEL BETWEEN ELEVATION POINTS SHOWN UNLESS NOTED OTHERWISE
9. CONTRACTOR SHALL VERIFY AND ADJUST PILE CAP ELEVATIONS TO MAINTAIN MINIMUM DEPTH PER DETAIL 2 / S-67

REV	DESCRIPTION	DATE	APPR.	REFERENCE INFORMATION AND NOTES

BIGGS CARDOSA ASSOCIATES INC
STRUCTURAL ENGINEERS
865 The Alameda
San Jose, California 95126
408-296-5515
BCA

DATE 05-18-10
DESIGN D.L.L.
DRAWN S.M.H.
CHECKED A.P.N.

ENGINEERING CERTIFICATION
REGISTERED PROFESSIONAL ENGINEER — ANDRASH M. HARTMAN — No. 2639 — Exp. 12/31/10 — STRUCTURAL — STATE OF CALIFORNIA
PROJECT ENGINEER — DATE 5/18/10

Santa Clara Valley Water District
ACCEPTED BY DISTRICT
Dennis Cheung — 6/1/10
PROJECT ENGINEER — DATE

PROJECT NAME AND SHEET DESCRIPTION:
LOWER SILVER CREEK REACHES 4, 5 & 6A
PLAN AND ELEVATION STA 214+32 TO 217+20

SCALE: AS SHOWN
VERIFY SCALES: 0 — 1"
BAR IS ONE INCH ON ORIGINAL DRAWING IF NOT ONE INCH ON THIS SHEET, ADJUST SCALES ACCORDINGLY

PROJECT NUMBER: 40264008
SHEET CODE: S-66
PAGE NUMBER: 150 OF 188

DOCUMENT NUMBER: CAD_XX-X-XXXX-XXXXX
FILENAME: W:\2001\2001093A\2001093AS66
4026 - 93/91

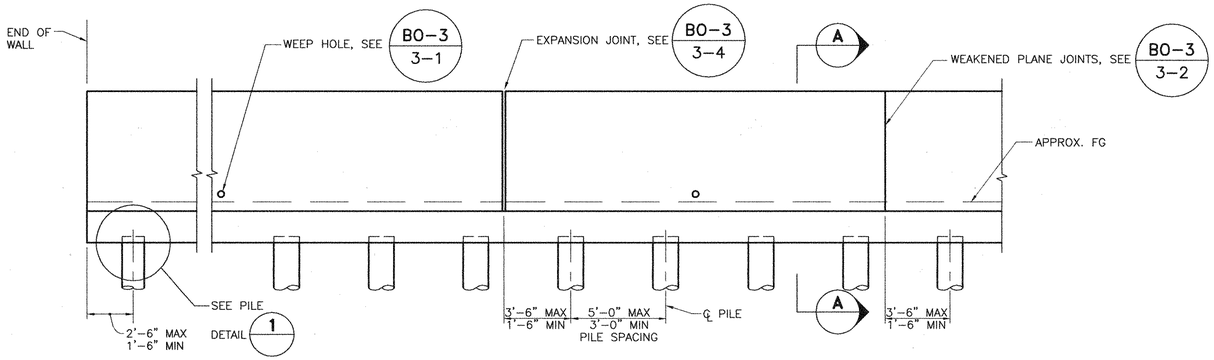

NOTES:

1. FOR WALL LAYOUT, SEE 'PLAN & ELEVATION' SHEETS.
2. FOR SPACING OF EXPANSION & WEAKENED PLANE JOINTS, SEE BO-3 / 3-3.

TYPICAL DRILLED PIER ELEVATION

SCALE: 1/4" = 1'-0"

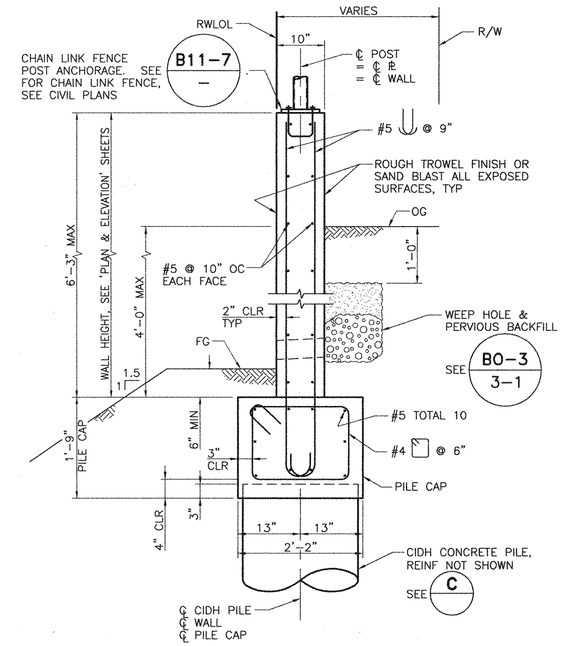

DRILLED PIER WALL

SECTION A

3/4" = 1'-0"

NOTES:

1. SEE SHEET S-47 FOR PILE LENGTH AND SPACING AT GAS LINE UTILITIES.
2. IF GROUNDWATER IS ENCOUNTERED DURING DRILLING, CIDH VERTICAL REINF BARS SHALL BE BUNDLED, AND INSPECTION PIPES SHALL BE UTILIZED PER SPECIFICATIONS.

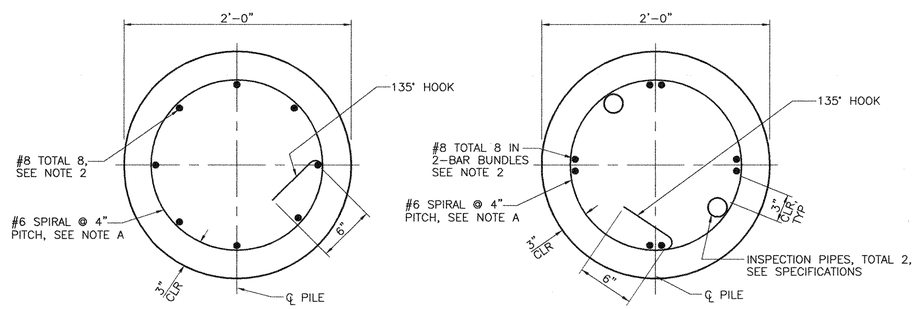

NOTE:

A. WHERE SPLICES ARE REQUIRED, SPIRAL REINFORCEMENT SHALL BE LAPPED 80 DIAMETERS MINIMUM. A 135° HOOK THAT IS HOOKED AROUND A LONGINTUDINAL BAR SHALL BE USED TO TERMINATE THE ENDS OF THE SPIRAL REINFORCEMENT AT LAPPED SPLICES AND AT TOP AND BOTTOM OF THE PILE.

SECTION C

1 1/2" = 1'-0"

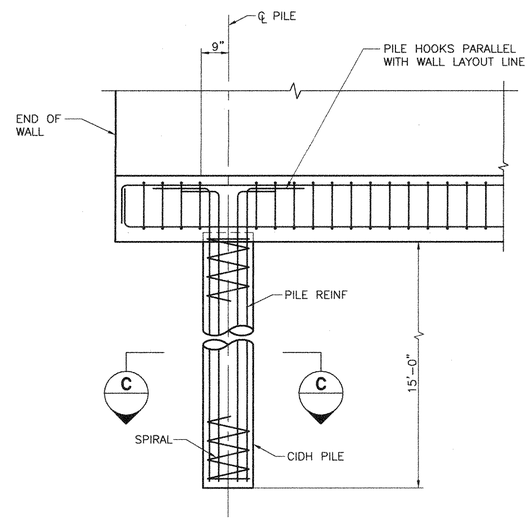

PILE DETAIL 1

1/2" = 1'-0"

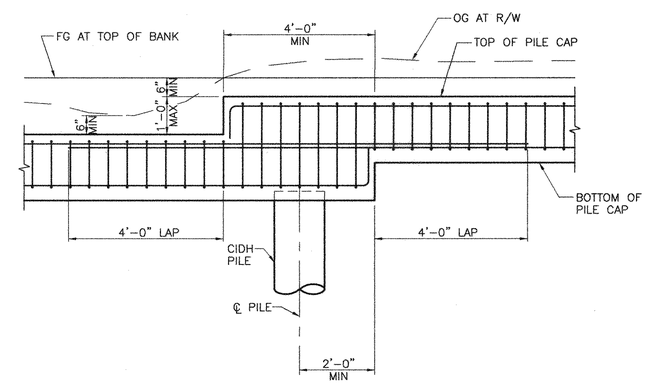

DETAIL 2 DRILLED PIER PILE CAP

1/2" = 1'-0"

REV	DESCRIPTION	DATE	APPR.	REFERENCE INFORMATION AND NOTES

BIGGS CARDOSA ASSOCIATES INC
STRUCTURAL ENGINEERS
865 The Alameda
San Jose, California 95126
408-296-5515
BCA

DATE	
05-18-10	
DESIGN	A.W.R.
DRAWN	S.M.H.
CHECKED	A.P.N.

ENGINEERING CERTIFICATION
REGISTERED PROFESSIONAL ENGINEER — ASHISH M. RATNADIP — No. 2639 — Exp. 12/31/10 — STRUCTURAL — STATE OF CALIFORNIA
PROJECT ENGINEER 5/18/10 DATE

Santa Clara Valley Water District
ACCEPTED BY DISTRICT
Dennis Chang 6/1/10
PROJECT ENGINEER DATE

PROJECT NAME AND SHEET DESCRIPTION:

LOWER SILVER CREEK REACHES 4, 5 & 6A

DRILLED PIER WALLS
ELEVATIONS, SECTIONS AND DETAILS

SCALE: AS SHOWN
VERIFY SCALES: 0 1"
BAR IS ONE INCH ON ORIGINAL DRAWING IF NOT ONE INCH ON THIS SHEET, ADJUST SCALES ACCORDINGLY

PROJECT NUMBER: 40264008
SHEET CODE: S-67
PAGE NUMBER: 151 OF 188

DOCUMENT NUMBER: CAD_XX-X-XXXX-XXXXX 4026-43142
FILENAME: W:\2001\2001093A\2001093AS67

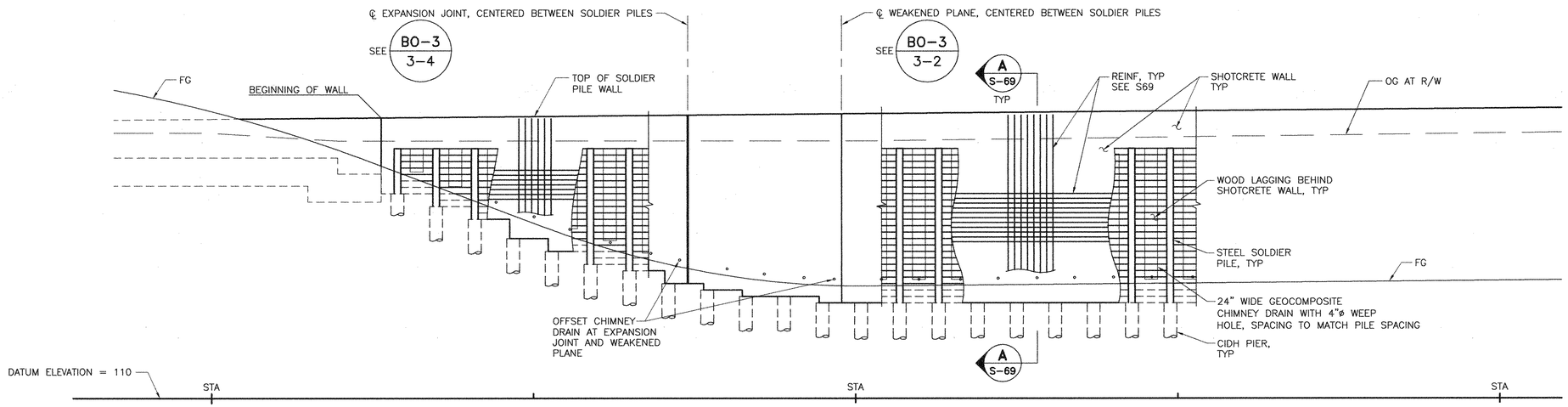

NOTE:
FOR SPACING OF EXPANSION JOINT AND WEAKENED PLANE JOINTS, SEE BO-3 / 3-3.

TYPICAL SOLDIER PILE WALL ELEVATION

SCALE: 1" = 10'

NOTES:

1. SEE CIVIL PLANS FOR CURVE & ALIGNMENT DATA.
2. SEE CIVIL PLANS FOR RWLOL.
3. OG AT R/W – INDICATES TOP OF ORIGINAL GRADE AT TOP OF RETAINING WALL. SEE CIVIL PLANS.
4. FG – INDICATES FINISHED GRADE AT BOTTOM OF WALL. SEE CIVIL PLANS.

REV	DESCRIPTION	DATE	APPR.	REFERENCE INFORMATION AND NOTES

BIGGS CARDOSA ASSOCIATES INC
STRUCTURAL ENGINEERS
865 The Alameda
San Jose, California 95126
408-296-5515

DATE 05-18-10
DESIGN A.W.R.
DRAWN S.M.H.
CHECKED A.P.N.

ENGINEERING CERTIFICATION
REGISTERED PROFESSIONAL ENGINEER MARSH M HARRIS No. 2639 Exp. 12/31/10 STRUCTURAL STATE OF CALIFORNIA
PROJECT ENGINEER 5/18/10 DATE

Santa Clara Valley Water District
ACCEPTED BY DISTRICT
Dennis Cheung 6/1/10
PROJECT ENGINEER DATE

PROJECT NAME AND SHEET DESCRIPTION:
LOWER SILVER CREEK
REACHES 4, 5 & 6A
SOLDIER PILE WALLS,
TYPICAL ELEVATION

SCALE: AS SHOWN
VERIFY SCALES 0 1"
BAR IS ONE INCH ON ORIGINAL DRAWING IF NOT ONE INCH ON THIS SHEET, ADJUST SCALES ACCORDINGLY

PROJECT NUMBER 40264008
SHEET CODE: S-68
PAGE NUMBER: 152 OF 188

DOCUMENT NUMBER: CAD_XX-X-XXXX-XXXXX
FILENAME: W:\2001\2001093A\2001093AS68
4026 - 43143

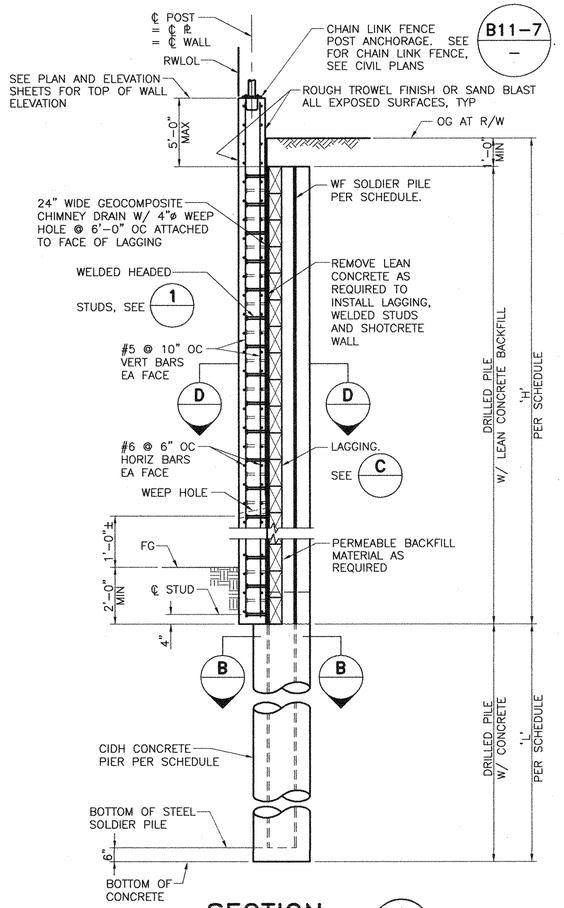

SECTION A
3/8" = 1'-0"

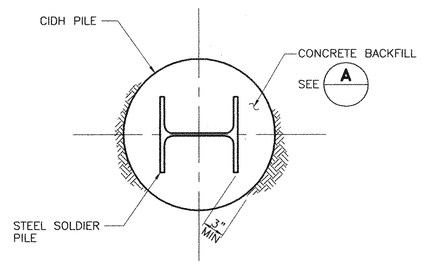

SECTION B
1" = 1'-0"

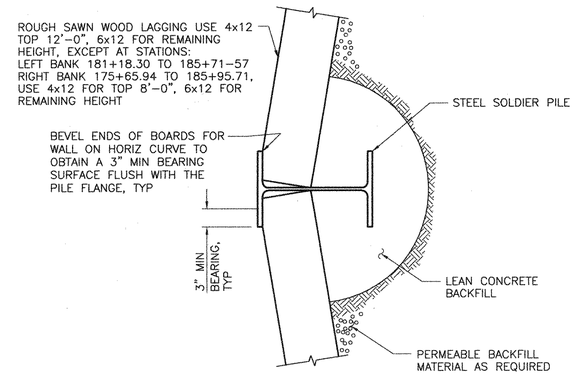

LAGGING NOTES:

1. REMOVE LEAN CONCRETE AS REQUIRED TO INSTALL LAGGING.
2. LAGGING TO BE INSTALLED LEVEL WITH 2-16d HOT-DIPPED GALVANIZED COMMON NAIL SPACERS, LOCATE AT 1/3 POINTS BETWEEN ADJACENT HORIZONTAL LAGGING.
3. INSTALL LAGGING A MINIMUM OF 2'-0" BELOW FG AT CHANNEL.
4. INSTALL PERMEABLE BACKFILL MATERIAL BETWEEN LAGGING AND EXISTING SOIL AS REQUIRED.
5. LAGGING SHALL BE PRESSURE TREATED DOUGLAS FIR No. 1.

SECTION C
1 1/2" = 1'-0"

SOLDIER PILE WALL SCHEDULE

DESIGN 'H'	CIDH PILE SPACING	CIDH PILE L	CIDH PILE DIAMETER	STEEL SOLDIER PILE
6'-0"	6'-0"	20'-0"	2'-6"	W18x40
8'-0"	6'-0"	22'-0"	2'-6"	W18x71
10'-0"	6'-0"	26'-0"	2'-6"	W18x106
12'-0"	6'-0"	30'-0"	2'-6"	W18x211
14'-0"	3'-0"	24'-0"	2'-6"	W18x86
16'-0"	3'-0"	25'-0"	2'-6"	W18x130

SOLDIER PILE WALL SCHEDULE FOR LEFT BANK STA 181+18.30 TO 185+71.57 FOR RIGHT BANK STA 175+65.94 TO 185+95.71

DESIGN 'H'	CIDH PILE SPACING	CIDH PILE L	CIDH PILE DIAMETER	STEEL SOLDIER PILE
6'-0"	6'-0"	20'-0"	2'-6"	W18x40
8'-0"	6'-0"	26'-0"	2'-6"	W18x106
10'-0"	6'-0"	30'-0"	2'-6"	W18x234
12'-0"	3'-0"	27'-0"	2'-6"	W18x143
14'-0"	3'-0"	28'-0"	2'-6"	W18x234
16'-0"	3'-0"	34'-0"	3'-0"	W24x250

NOTES:

1. DESIGN 'H' MAY BE REDUCED BY 2'-0" WHERE FG IS PROTECTED FROM SCOUR BY CONCRETE LINING, CUT-OFF WALLS, ETC.
2. DESIGN 'H' MAY BE AVERAGED FOR THE THREE SOLDIER PILES AT THE END OF WALL, PROVIDING ALL THREE SOLDIER PILES HAVE THE SAME SPACING, LENGTH L, DIAMETER AND STEEL SECTION, AND BOTTOM OF CONCRETE WALL IS HORIZONTAL ACROSS THE THREE PILES AT 2'-0" BELOW LOWEST FG.
3. ALTERNATE DRILLING OF PIERS @ 3'-0" OC.

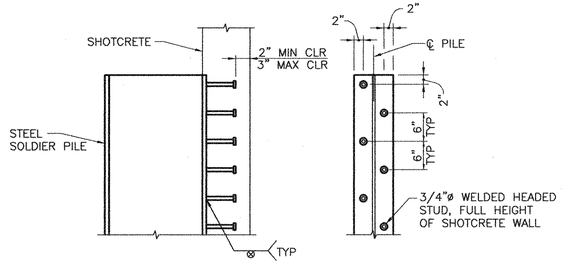

NOTE:
GRIND AND CLEAN FACE OF SOLDIER PILE TO INSTALL WELDED HEADED STUDS

DETAIL 1
3/4" = 1'-0"

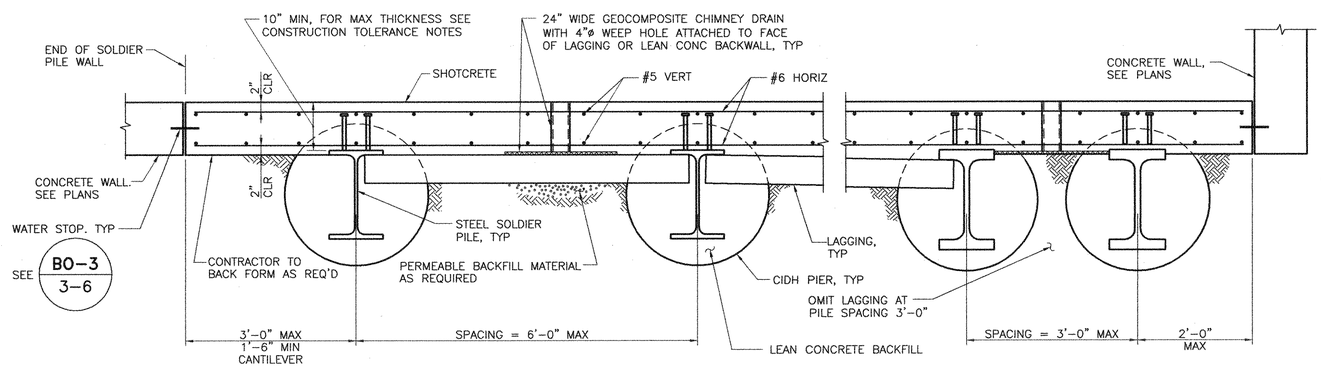

SECTION D
3/4" = 1'-0"

CONSTRUCTION TOLERANCE NOTES:

1. CONTRACTOR SHALL LAY OUT DRILLED PIERS AND SOLDIER PILES TO ENSURE SHOTCRETE THICKNESS IS NOT LESS THAN MINIMUM THICKNESS SHOWN PER DETAIL D.
2. MAXIMUM HORIZONTAL TOLERANCE IN LOCATION OF THE SOLDIER PILE WALL, INCLUDING SOLDIER PILE, SHALL BE 2"± IN ANY DIRECTION AT EXISTING GROUND LEVEL.
3. MAXIMUM TOLERANCE FOR HORIZONTAL ROTATION OF THE SOLDIER PILE SHALL BE ±5 DEGREES.
4. OUT OF PLUMB TOLERANCE OF THE SOLDIER PILE WALL, INCLUDING SOLDIER PILES, SHALL NOT EXCEED ±1.0 PERCENT OF THE HEIGHT OF THE SOLDIER PILE IN ANY DIRECTION.
5. MAXIMUM CUMULATIVE TOLERANCE FROM EXISTING GROUND TO BOTTOM OF SHOTCRETE OF SOLDIER PILE WALL, INCLUDING SOLDIER PILE, SHALL BE LIMITED TO 3.5"±.

REV	DESCRIPTION	DATE	APPR.	REFERENCE INFORMATION AND NOTES

BIGGS CARDOSA ASSOCIATES INC
STRUCTURAL ENGINEERS
865 The Alameda
San Jose, California 95126
408-296-5515
BCA

DATE	05-18-10
DESIGN	A.W.R.
DRAWN	S.M.H.
CHECKED	
A.P.N.	

ENGINEERING CERTIFICATION
REGISTERED PROFESSIONAL ENGINEER — ASHISH M. HARNEY — No. 2639 — Exp. 12/31/10 — STRUCTURAL — STATE OF CALIFORNIA
PROJECT ENGINEER — DATE 5/18/10

Santa Clara Valley Water District
ACCEPTED BY DISTRICT
PROJECT ENGINEER — DATE 6/1/10

PROJECT NAME AND SHEET DESCRIPTION:
LOWER SILVER CREEK REACHES 4, 5 & 6A
SOLDIER PILE WALLS SCHEDULE, SECTIONS AND DETAILS

SCALE: AS SHOWN
VERIFY SCALES: 0 — 1" — BAR IS ONE INCH ON ORIGINAL DRAWING IF NOT ONE INCH ON THIS SHEET, ADJUST SCALES ACCORDINGLY
PROJECT NUMBER: 40264008
SHEET CODE: S-69
PAGE NUMBER: 153 OF 188

DOCUMENT NUMBER: CAD_XX-X-XXXX-XXXXX 4026-43144
FILENAME: W:\2001\2001093A\2001093AS69

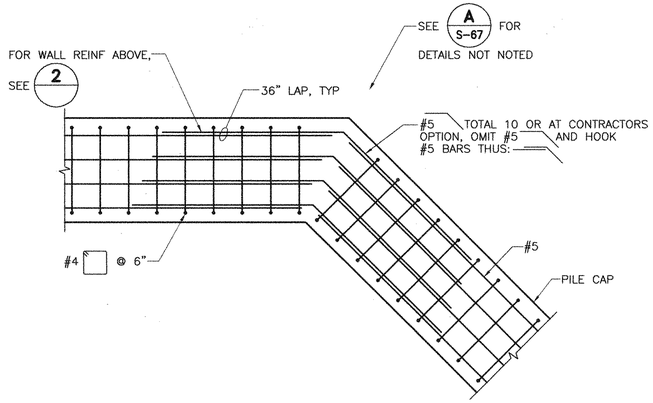

DETAIL 1 DRILLED PIER WALL FOOTING INTERSECITON

3/4" = 1'-0"

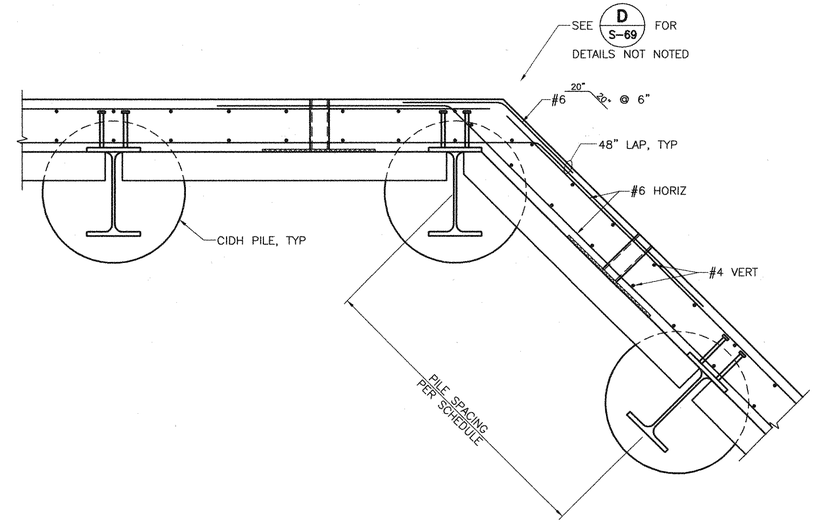

DETAIL 2 SOLDIER PILE WALL INTERSECTION

3/4" = 1'-0"

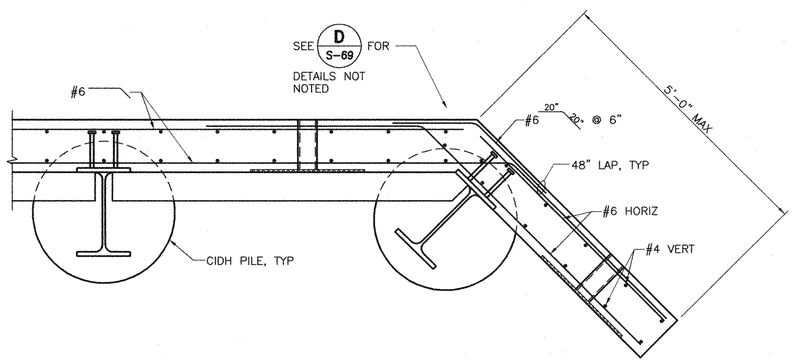

DETAIL 3 SOLDIER PILE RETURN WALL

3/4" = 1'-0"

REV	DESCRIPTION	DATE	APPR.	REFERENCE INFORMATION AND NOTES

BIGGS CARDOSA ASSOCIATES INC
STRUCTURAL ENGINEERS
865 The Alameda
San Jose, California 95126
408-296-5515
BCA

DATE	05-18-10
DESIGN	A.W.R.
DRAWN	S.M.H.
CHECKED	A.P.N.

ENGINEERING CERTIFICATION
REGISTERED PROFESSIONAL ENGINEER ANTHONY M. HAMILTON No. 2639 Exp. 12/31/10 STRUCTURAL STATE OF CALIFORNIA
PROJECT ENGINEER 5/18/10 DATE

Santa Clara Valley Water District
ACCEPTED BY DISTRICT
Dennis Chong 6/1/10
PROJECT ENGINEER DATE

PROJECT NAME AND SHEET DESCRIPTION:
LOWER SILVER CREEK REACHES 4, 5 & 6A
MISCELLANEOUS DETAILS I

SCALE: AS SHOWN
VERIFY SCALES 0 1"
BAR IS ONE INCH ON ORIGINAL DRAWING IF NOT ONE INCH ON THIS SHEET, ADJUST SCALES ACCORDINGLY

PROJECT NUMBER: 40264008
SHEET CODE: S-70
PAGE NUMBER: 154 OF 188

DOCUMENT NUMBER: CAD_XX-X-XXXX-XXXXX
FILENAME: W:\2001\2001093A\2001093AS70
4026-43145

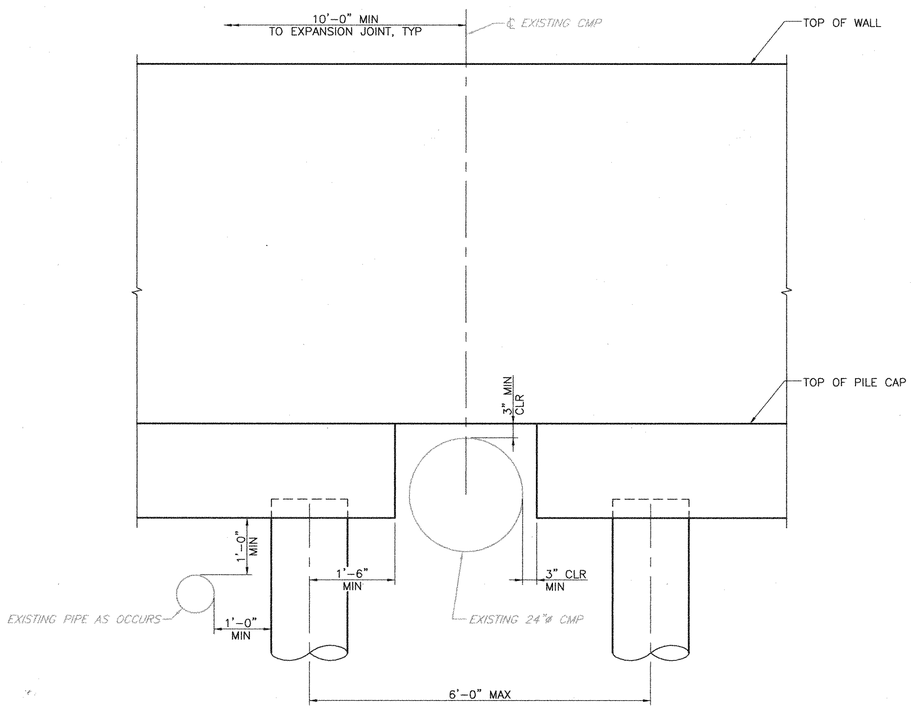

DETAIL 1
3/4" = 1'-0"

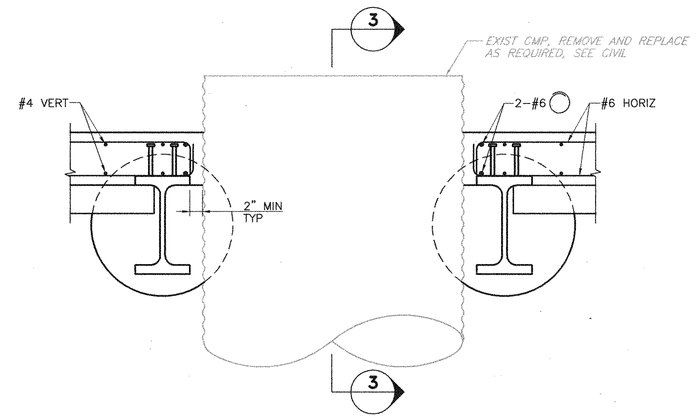

DETAIL 2
3/4" = 1'-0"

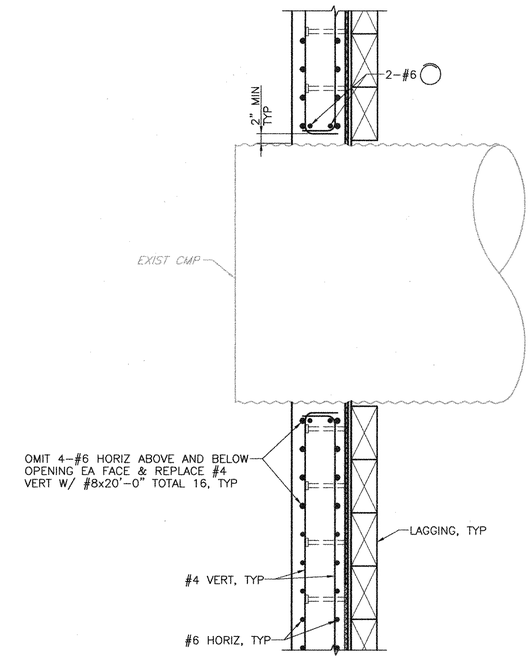

DETAIL 3
3/4" = 1'-0"

REV	DESCRIPTION	DATE	APPR.	REFERENCE INFORMATION AND NOTES

BIGGS CARDOSA ASSOCIATES INC
STRUCTURAL ENGINEERS
865 The Alameda
San Jose, California 95126
408-296-5515
BCA

DATE	05-18-10
DESIGN	A.W.R.
DRAWN	S.M.H.
CHECKED	A.P.N.

ENGINEERING CERTIFICATION
REGISTERED PROFESSIONAL ENGINEER ALEXANDER M. RAYKES No. 2639 Exp. 12/31/10 STRUCTURAL STATE OF CALIFORNIA
PROJECT ENGINEER 5/18/10 DATE

Santa Clara Valley Water District
ACCEPTED BY DISTRICT
Dennis Cheung 6/1/10
PROJECT ENGINEER DATE

PROJECT NAME AND SHEET DESCRIPTION:
LOWER SILVER CREEK REACHES 4, 5 & 6A
MISCELLANEOUS DETAILS II

SCALE: AS SHOWN
VERIFY SCALES: 0 1"
BAR IS ONE INCH ON ORIGINAL DRAWING IF NOT ONE INCH ON THIS SHEET, ADJUST SCALES ACCORDINGLY

PROJECT NUMBER: 40264008
SHEET CODE: S-71
PAGE NUMBER: 155 OF 188

DOCUMENT NUMBER: CAD_XX-X-XXXX-XXXXX
FILENAME: W:\2001\2001093A\2001093AS71
4026-93/46

LATERAL PIPE SIZING CHART SCH 40 PVC	
GPM MIN./MAX.:	PIPE SIZE:
1–8 GPM:	3/4" PVC
9–12 GPM:	1" PVC
12–22 GPM:	1 1/2" PVC
23–30 GPM:	1 1/2" PVC
31–50 GPM:	2" PVC
51–70 GPM:	2 1/2" PVC

LATERAL PIPE SIZING CHART CLASS 200 PVC	
GPM MIN./MAX.:	PIPE SIZE:
1–10 GPM:	3/4" PVC
11–16 GPM:	1" PVC
17–26 GPM:	1 1/4" PVC
27–35 GPM:	1 1/2" PVC
36–55 GPM:	2" PVC
56–80 GPM:	2 1/2" PVC

IRRIGATION PRESSURE CALCULATION

VALVE #1 & #2 COMBINED

POC METER #	4
SIZE AND TYPE OF METER	1 1/2" DISC
ELEVATION OF WATER METER	117'–0"
STATIC PRESSURE	88 PSI
BASIS FOR CALCULATION	HIGHEST FLOW FOR TWO (2) VALVES (TOP & BOTTOM BANK) RUNNING AT THE SAME TIME AND THE LONGEST RUN
SIZES OF REMOTE CONTROL VALVES	1" AND 1 1/2"
REMOTE CONTROL VALVE #	1 AND 2
DEMAND AT REMOTE CONTROL VALVES	40 GPM
HIGHEST EMITTER ELEVATION ON THE SYSTEM	109.2
PRESSURE NEEDED AT THE EMITTER	20 PSI MIN.

PRESSURE LOSS THROUGH EQUIPMENT			
QUANTITY	SIZE	DESCRIPTION OF ITEM(S)	PSI LOSS FOR ITEM(S)
1	1 1/2"	WATER METER	3.3
1	1 1/4"	PRESSURE REGULATOR	9
1	2"	GATE VALVE	0.08
2000'	2"	MAINLINE	23

TOTAL SYSTEM LOSSES	35.38
PRESSURE REQUIRED TO OPERATE HIGH FLOW DRIP ZONE VALVE #2	41.8 PSI
SUBTOTAL PRESSURE REQUIRED FOR IRRIGATION SYSTEM	77.2 PSI
STATIC PSI AVAILABLE	88 PSI
RESIDUAL PRESSURE	10.8 PSI

IRRIGATION NOTES

1. THIS IRRIGATION SYSTEM WAS DESIGNED TO OPERATE AT A MAXIMUM OF 40 GPM WITH A MINIMUM OF 80 P.S.I. STATIC AT THE POINT OF CONNECTION. PRESSURE IS TO BE VERIFIED IN FIELD BY CONTRACTOR PRIOR TO BEGINNING WORK ON THE IRRIGATION SYSTEM. REPORT FINDINGS TO THE OWNERS REPRESENTATIVE PRIOR TO BEGINNING WORK. FAILURE TO DO SO MAY RESULT IN ADDITIONAL WORK BY THE CONTRACTOR AT NO COST TO THE OWNER.
2. IRRIGATION CONTRACTOR IS TO CONFIRM POINT OF CONNECTIONS FOR THE SYSTEM AND TO COORDINATE WITH THE GENERAL CONTRACTOR IN LOCATING THE POINT OF CONNECTION, INSTALLED SLEEVING, AND ELECTRICAL SOURCE FOR CONTROLLER. POWER SUPPLY HOOK UP OF IRRIGATION ASSEMBLY SHALL BE THE RESPONSIBILITY OF THE IRRIGATION CONTRACTOR. IRRIGATION CONTRACTOR SHALL COORDINATE WITH GENERAL CONTRACTOR IN OBTAINING POWER SOURCE, AND SHALL PROVIDE ALL NECESSARY SLEEVING FOR OTHER TRADES. REQUIRED SLEEVING IS NOT LIMITED TO THAT WHICH IS SHOWN. SLEEVE MATERIAL SHALL BE OF TYPE INDICATED. SLEEVING DEDICATED FOR IRRIGATION SHALL BE CLEARLY MARKED.
3. IRRIGATION COMPONENTS MAY BE SHOWN OUTSIDE PLANTING AREAS FOR GRAPHIC CLARITY. LOCATE EQUIPMENT IN NEAREST ADJACENT PLANTERS AS FEASIBLE AND INDICATE EXACT LOCATION ON RECORD DRAWINGS.
4. PROGRAMMING OF THE CONTROLLER SHALL BE THE RESPONSIBILITY OF THE CONTRACTOR UNTIL FINAL ACCEPTANCE. UPON FINAL ACCEPTANCE, CONTRACTOR IS TO TURN OVER MATERIALS AS OUTLINED IN THE SPECIFICATIONS AND FULLY INSTRUCT THE DISTRICT'S MAINTENANCE STAFF IN THE OPERATION OF THE SYSTEM. THE INTENT OF THIS IRRIGATION SYSTEM IS TO PROVIDE THE MINIMUM AMOUNT OF WATER REQUIRED TO SUSTAIN GOOD PLANT HEALTH. IT IS THE RESPONSIBILITY OF THE MAINTENANCE CONTRACTOR TO MAKE ADJUSTMENTS IN THE CONTROLLER PROGRAM FOR SEASONAL WEATHER CHANGES AND MICROCLIMATIC VARIATIONS.
5. ALL LATERAL PIPING IS TO BE SIZED PER THE PIPE SIZING CHART ON THIS SHEET. REFER TO THE IRRIGATION LEGEND FOR INFORMATION ON GPM'S.
6. CONTRACTOR SHALL USE EXTREME CARE WHERE IT IS NECESSARY TO TRENCH NEAR EXISTING TREES. EXCAVATION IN AREAS EXHIBITING ROOTS 2" AND LARGER SHALL BE DONE BY HAND. ROOTS 1" OR LARGER IN DIAMETER DAMAGED IN CONSTRUCTION SHALL BE CLEANLY CUT AND NOT LEFT IN A RAGGED CONDITION. TREE ROOTS SHALL BE COVERED WITH WET BURLAP WHILE EXPOSED.
7. REFER TO IRRIGATION DETAILS SHEET, DRAWINGS AND SPECIFICATIONS FOR MORE INFO.

   CONTRACTOR SHALL PROVIDE RIGID PVC CLASS 200 CONNECTION FROM VALVE TO 1/2" ABOVE GROUND FLEX PVC PIPE. RIGID PVC AND FLEX PVC PIPE CONNECTIONS SHALL HAVE ALL REQUIRED FITTINGS FOR TRANSITION FROM RIGID TO ABOVE–GROUND FLEXIBLE PIPE.

8. **CONTRACTOR SHALL USE RAINBIRD (OR EQUAL) PC–05 AND PC–10 PRESSURE COMPENSATING DRIP EMITTERS ACCORDING TO THE FOLLOWING SCHEDULE:**
   - **A. ALL TREES TO RECEIVE (2) 10 GPH EMITTERS**
   - **B. ALL SHRUBS IN PLANT GROUP 'SHRUBS 1' AT UPPER BANK TO RECEIVE (2) 10 GPH EMITTERS**
   - **C. ALL SHRUBS IN PLANT GROUP 'SHRUBS 1' AT LOWER BANK TO RECEIVE (2) 5 GPH EMITTERS**
   - **D. ALL 'HERBS' TO RECEIVE (2) 5 GPH EMITTERS**
   - **E. ALL CLUSTERS OF (3) PLANTS TO RECEIVE (2) 5 GPH EMITTERS**

   CONTRACTOR SHALL NOT USE SPAGHETTI TUBING, LOW–FLOW VOLUME EMITTERS, ETC.

10. **IT IS THE CONTRACTOR'S RESPONSIBILITY TO IRRIGATE THE HYDROSEED AND CREEK BOULDER PLANTINGS AS NEEDED FOR ESTABLISHMENT DURING THE COURSE OF THE CONTRACT.**

12. FLOW SENSOR CABLE SHALL BE PAIGE CABLE P–7162–D OR EQUAL. ALL FLOW SENSOR WIRES SHALL BE INSTALLED WITH A GRAY 1–1/2" SCH. 40 PVC CONDUIT,

11. IRRIGATION CONTRACTOR RESPONSIBLE FOR BRANDING VALVE SEQUENCING INTO VALVE BOX.

12. PRESSURE TEST PROCEDURE: THE CONTRACTOR SHALL:
    - A. NOTIFY DISTRICT ENGINEER AT LEAST THREE (3) DAYS IN ADVANCE OF TESTING.
    - B. PERFORM TESTING AT HIS OWN EXPENSE.
    - C. CENTER–LOAD PIPING WITH SMALL AMOUNT OF BACKFILL TO PREVENT ARCHING OR SLIPPING UNDER PRESSURE. NO FITTING SHALL BE COVERED.
    - D. APPLY THE FOLLOWING TESTS AFTER WELD PLASTIC PIPE JOINTS HAVE CURED AT LEAST 24 HOURS.
      1. TEST LIVE (CONSTANT PRESSURE) AND QUICK COUPLER LINE HYDROSTATICALLY AT 150 PSI MIN. LINES WILL BE APPROVED IF TEST PROCEDURE MAINTAINED FOR TWO (2) HOURS. THE LINE WILL BE APPROVED OR NOT APPROVED AS SUCH RESULTS MAY INDICATE. THE CONTRACTOR SHALL MAKE TESTS AND REPAIRS AS NECESSARY UNTIL TEST CONDITIONS ARE MET.
      2, TEST RCV CONTROLLED LATERAL LINES WITH WATER AT LINE PRESSURE AND VISUALLY INSPECT FOR LEAKS. RETEST AFTER CORRECTING DEFECTS.

IRRIGATION SCHEDULE

NOTE: ALL IRRIGATION EQUIPMENT TO BE AS SHOWN OR APPROVED EQUAL.

SYMBOL	MANUFACTURER/MODEL	QTY	ARC	PSI	FLOW DETAIL	
◘	RAIN BIRD 1806–SAM–PRS–1400 FLOOD (1 PER VINE)	296	360	30	0.50 GPM	5/I–15
▲	RAIN BIRD 1806–SAM–PRS–1400 FLOOD (1 PER TREE)	77	360	30	1.00 GPM	5/I–15
	RAINBIRD XERI–BUG EMITTER. PRESSURE COMPENSATING MODULE WITH THREADED INLET. XBT–05–PC–1032 OR APPROVED EQUAL (SEE SECOND SEASON ENLARGEMENT ON SHEET I–2)	SEE NOTE #9, THIS SHEET			5 GPH	4/I–16
	RAINBIRD XERI–BUG EMITTER. PRESSURE COMPENSATING MODULE WITH THREADED INLET. XBT–12–PC–1032 OR APPROVED EQUAL (SEE SECOND SEASON ENLARGEMENT ON SHEET I–2)				10 GPH	4/I–16
	RAIN BIRD XCZ–100–PRB–COM DRIP CONTROL KIT, 1" PEBS VALVE, 1" BASKET FILTER, AND 40PSI PRESSURE REGULATOR, 1" BALL VALVE. PROVIDE AND INSTALL LATCHING SOLENOIDS WITH BATTERY OPERATED CONTROLLERS.	15				5/I–16
	RAIN BIRD XCZ–150–COM HIGH FLOW CONTROL ZONE KIT WITH 1–1/2" PESB VALVE, TWO 1" FILTERS AND TWO 40PSI PRESSURE REGULATORS. PROVIDE AND INSTALL LATCHING SOLENOIDS WITH BATTERY OPERATED CONTROLLERS.	10				5/I–16
	RAIN BIRD XCZ–100–PRF–BF MEDIUM FLOW CONTROL ZONE KIT WITH PRESSURE REGULATOR BACKFLUSH.	7				5/I–16
	RAIN BIRD PEB–PRS–D ELECTRIC REMOTE CONTROL VALVE WITH PRESSURE REGULATOR. CONTRACTOR TO FIELD INSTALL THE PRESSURE REGULATORS PRIOR TO EACH VALVE BEING INSTALLED IN THE GROUND.	58				2/I–15
	RAIN BIRD 5LRC PLASTIC 1" QUICK COUPLER VALVE, ONE PIECE BODY, LOCKING COVER. MAXIMUM DISTANCE BETWEEN QUICK COUPLERS TO BE 200' – SEE PLANS.	77				3/I–15
	KBI BTU–E RUBBER COVER, PVC BLOCKED TRUE UNION BALL VALVE S.O.V., 1/2" TO 2", SAME SIZE AS PIPE	40				1/I–15
MV	RAIN BIRD PEB 2" MASTER VALVE NORMALLY CLOSED	4				3/I–14
BF	FEBCO 825Y 1 1/4" REDUCED PRESSURE BACKFLOW PREVENTER. WITH LOCKING, CLAMSHELL ENCLOSURE. ENCLOSURE TO BE POWDERCOATED WITH CALTRANS COLOR #20450	8				2/1–14
C8	*ET WATER – SMART CONTROLLER MODEL 205W (8 STATION) REMOTE CONTROL: TRC COMMANDER SYSTEM PN: 01025	3				
C16	*ET WATER – SMART CONTROLLER MODEL 205T (16 STATION) REMOTE CONTROL: TRC COMMANDER SYSTEM PN: 01025	1				
	* FOUR (4) MODULAR CONTROLLERS TO BE INSTALLED IN ENCLOSURE BY TESCO. SPECIFY: TESCO PADMOUNT TYPE IIIAF 27–000/22–000 BACK TO BACK STAINLESS STEEL – METERED SERVICE 20/240 VOLT 1 PHASE 3 WIRE. CONTACT: RON A. MONTOYA 916–395–8800 ELECTRICAL METER TO BE INSTALLED IN SAME ENCLOSURE. METER BY OTHERS. CONTRACTOR TO COORDINATE WITH ELECTRICAL CONTRACTOR.					1/I–14
BC	RAIN BIRD TBOS2CMUS AND TBOSFTUS BATTERY–OPERATED CONTROLLER, 2 STATION, WITH TBOSFTUS FIELD TRANSMITTER * TO BE MOUNTED ON A 1/2" PVC PIPE IF THE VALVE IS BELOW 18" FROM FINISH GRADE FOR CONVENIENT ACCESS.	15				6/1–15
FS	RAINBIRD FS150P AND PT1502 1 1/2" FLOW SENSOR AND PULSE TRANSMITTER INSTALL INTERFACE PANEL AS REQUIRED. SEE NOTE 11.	4				5/I–14
P	PULL BOX TO BE 10" ROUND LOCKABLE VALVE BOX TO MATCH QUICK COUPLER BOXES	4				
———	IRRIGATION LATERAL LINE: BLU–LOCK AND PVC CLASS 200 REFER TO PIPE SIZING, THIS SHEET					1,3/1–16 & 4/1–14
— — — —	IRRIGATION MAINLINE: PVC SCHEDULE 40					1,3/I–16
= = = = = = = =	PIPE SLEEVE: BLU–LOCK AND PVC CLASS 200 SLEEVE SIZE TO BE 2X THE DIAMETER OF THE LATERAL PIPE AND SHALL ALLOW FOR IRRIGATION PIPING AND THEIR RELATED COUPLINGS TO EASILY SLIDE THROUGH SLEEVING MATERIAL. EXTEND SLEEVES 18 INCHES BEYOND EDGES OF PAVING OR CONSTRUCTION.					
	VALVE BOXES TO BE RAINBIRD VB SERIES OR CHRISTY FIBERLYTE LOCKABLE WITH BOLT–DOWN COVER. COLOR: BLACK SEE IRRIGATION DETAILS 1–14 – 1–16 FOR SPECIFIC INFORMATION ALL BOXES TO BE BRANDED WITH VALVE NUMBER					6/I–15 FOR LAYOUT

VALVE CALLOUT

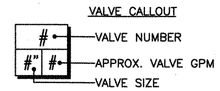

REV	DESCRIPTION	DATE	APPR.	REFERENCE INFORMATION AND NOTES

SSA LANDSCAPE ARCHITECTS INCORPORATED

DATE 05–18–10
DESIGN AH
DRAWN MB
CHECKED AH

ENGINEERING CERTIFICATION
LICENSED LANDSCAPE ARCHITECT STEVEN ROBERT SUTHERLAND No. 2805 Exp. 1–31 STATE OF CALIFORNIA
6/18/10
PROJECT ENGINEER DATE

Santa Clara Valley Water District
ACCEPTED BY DISTRICT
Dennis Cheung 6/1/10
DATE

PROJECT NAME AND SHEET DESCRIPTION:
LOWER SILVER CREEK REACHES 4, 5 & 6A
IRRIGATION NOTES & LEGENDS

SCALE
VERIFY SCALES 0 1"
BAR IS ONE INCH ON ORIGINAL DRAWING IF NOT ONE INCH ON THIS SHEET, ADJUST SCALES ACCORDINGLY

PROJECT NUMBER 40 84264008
SHEET CODE: I–1
PAGE NUMBER: 156 OF 188

DOCUMENT NUMBER: CAD_XX–X–XXXX–XXXXX
USERNAME: Briana Tue 18 May 2010 11:00am
FILENAME: \\Powervault705n\PowerVault\SSA Folder\01–Clients\090018.00–Silver Creek Stream Bank Restoration\090018.00–Drawings\CDs\(L01–L12) IRRIGATION
4026 - 93/47

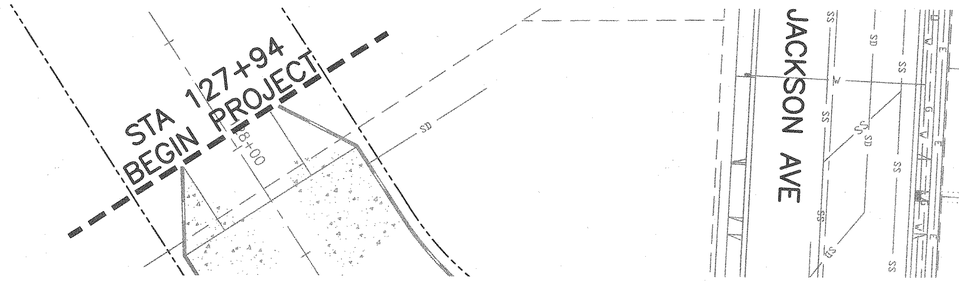

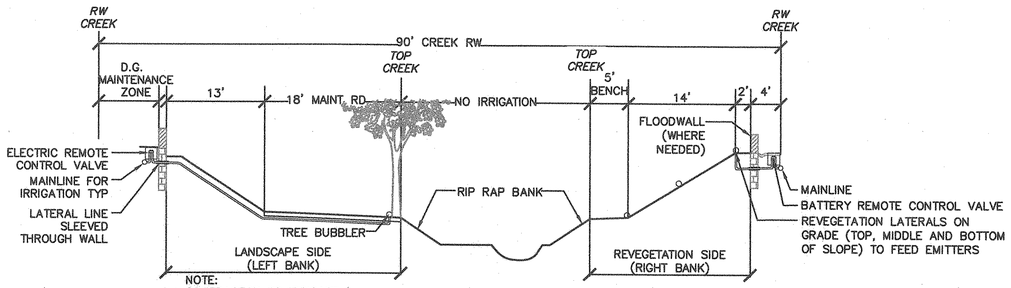

NOTE:
CONTRACTOR TO IRRIGATE HYDROSEED AS NEEDED WITH QUICK COUPLERS TYP. BOTH SIDES

IRRIGATION SECTION 1

(BETWEEN JACKSON AVE & CAPITOL EXPRESSWAY)
SCALE: 1"=10'

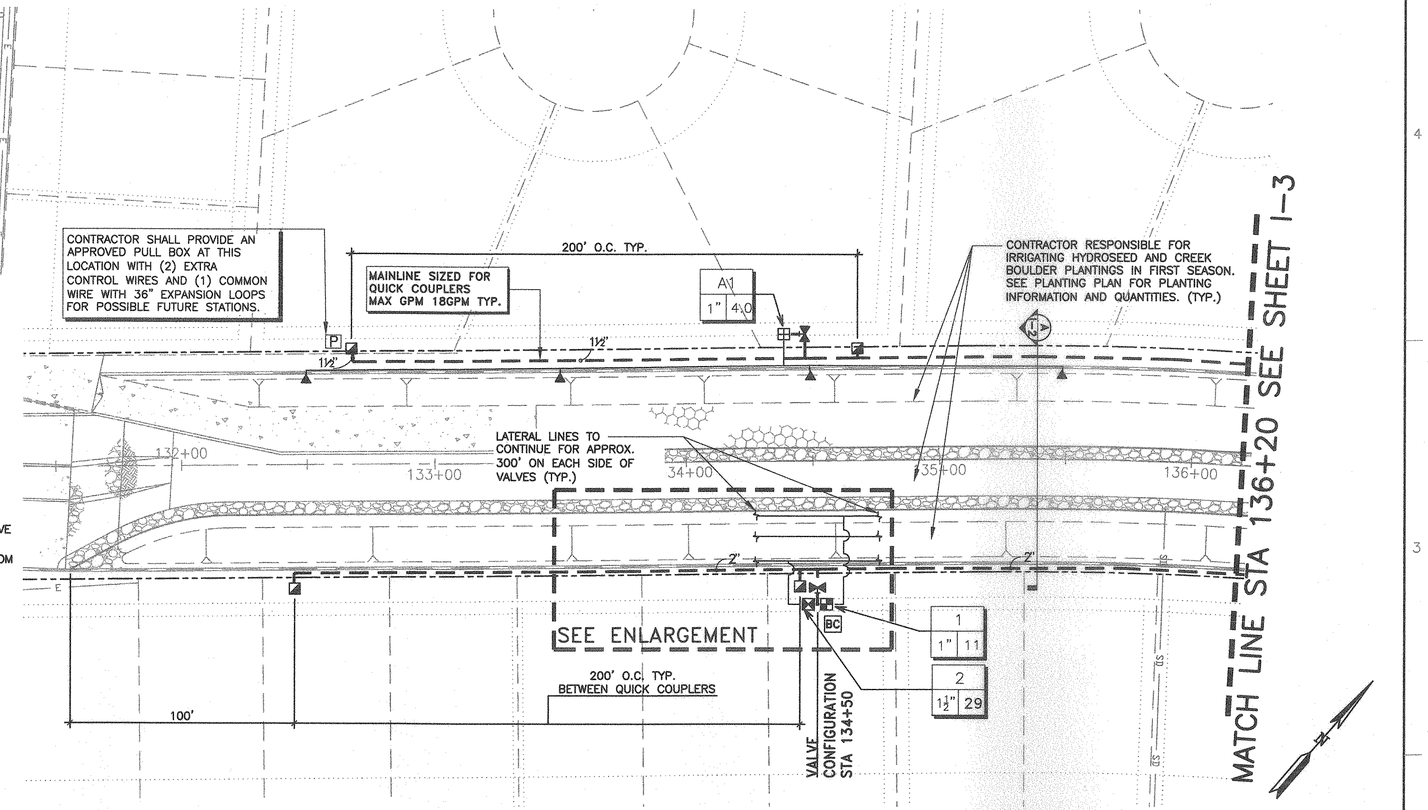

IRRIGATION SECTION 'A'

BETWEEN JACKSON AVENUE AND CAPITOL EXPRESSWAY
SCALE: 1"-10'-0"

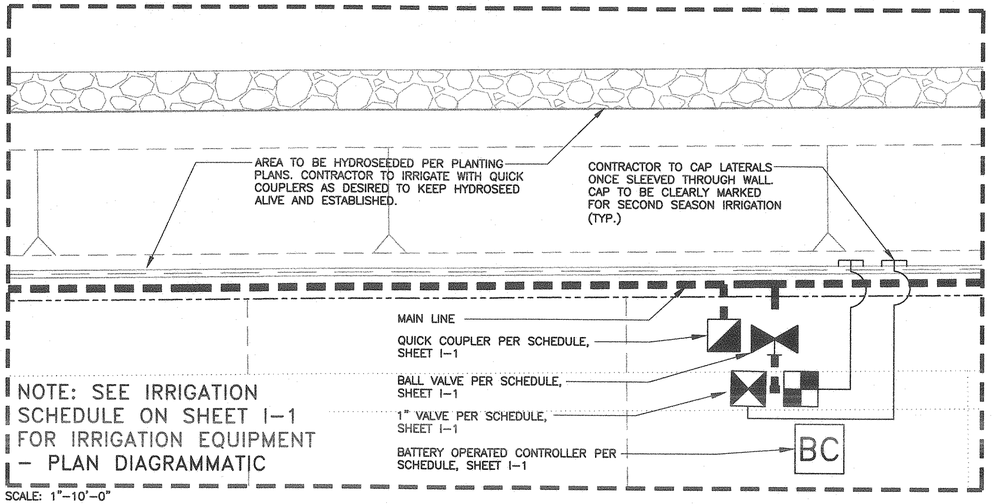

NOTE: SEE IRRIGATION SCHEDULE ON SHEET I-1 FOR IRRIGATION EQUIPMENT – PLAN DIAGRAMMATIC

SCALE: 1"-10'-0"

FIRST SEASON – EXAMPLE DRIP EMITTER LAYOUT ON RIGHT BANK ENLARGEMENT

FIRST PLANTING SEASON:

- RIGHT BANK – INSTALL CONTROLLERS, MAINLINE, AND VALVES PER PLAN.
- LEFT BANK – INSTALL CONTROLLERS, MAINLINE, AND LATERALS PER PLAN. INSTALL LATERALS BELOW GRADE AND STUB TO APPROX. BUBBLER LOCATION AND CAP FOR FUTURE SECOND SEASON PLANTING.
- INSTALL ALL SLEEVING THOUGH WALLS

SECOND PLANTING SEASON (AFTER HYDROSEED ESTABLISHMENT PERIOD):

- RIGHT BANK – INSTALL LATERALS, TEES, AND DRIP EMITTERS TO EACH PLANT OR CLUSTERS OF (3) PLANTINGS. SEE ADJACENT ENLARGEMENT, THIS SHEET, AND NOTE #10, SHEET I-1.
- LEFT BANK – INSTALL TREE AND VINE BUBBLERS.

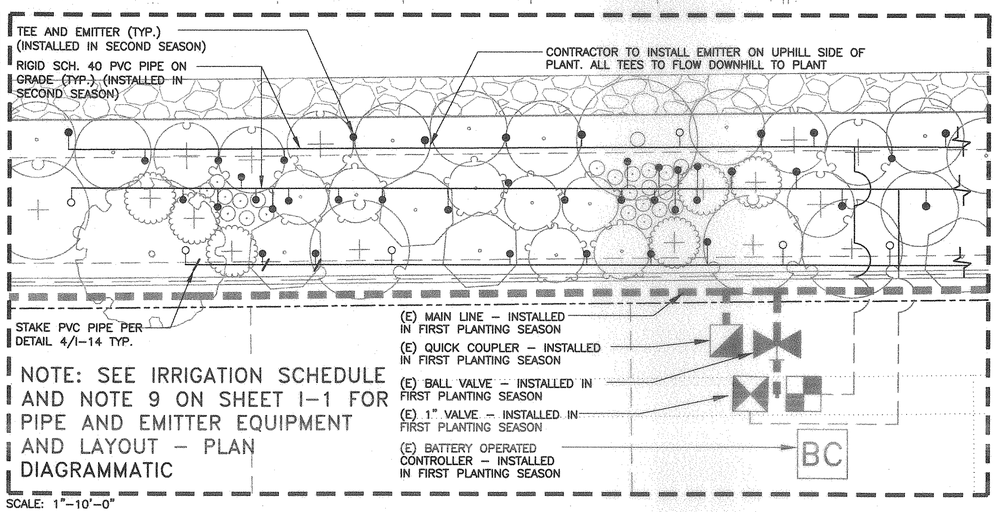

NOTE: SEE IRRIGATION SCHEDULE AND NOTE 9 ON SHEET I-1 FOR PIPE AND EMITTER EQUIPMENT AND LAYOUT – PLAN DIAGRAMMATIC

SCALE: 1"-10'-0"

SECOND SEASON – EXAMPLE DRIP EMITTER LAYOUT ON RIGHT BANK ENLARGEMENT

REV	DESCRIPTION	DATE	APPR.	REFERENCE INFORMATION AND NOTES

SSA LANDSCAPE ARCHITECTS INCORPORATED

DATE 05-18-10
DESIGN AH
DRAWN MB
CHECKED AH

ENGINEERING CERTIFICATION
LICENSED LANDSCAPE ARCHITECT STEVEN ROBERT SUTHERLAND No. 2805 Exp. 1-31-12 STATE OF CALIFORNIA
5/18/10
PROJECT ENGINEER DATE

Santa Clara Valley Water District
ACCEPTED BY DISTRICT
Dennis Chang 6/1/10
DATE

PROJECT NAME AND SHEET DESCRIPTION:
LOWER SILVER CREEK REACHES 4, 5 & 6A
IRRIGATION PLAN STA 127+94 TO STA 136+20

SCALE 1"=30'
VERIFY SCALES 0 1"
BAR IS ONE INCH ON ORIGINAL DRAWING IF NOT ONE INCH ON THIS SHEET, ADJUST SCALES ACCORDINGLY

PROJECT NUMBER 40264008
SHEET CODE: I-2
PAGE NUMBER: 157 OF 188

DOCUMENT NUMBER: CAD_XX-X-XXXX-XXXXX
4026-43/48
USERNAME: Megan Mon 17 May 2010 06:13pm
FILENAME: \\powervault705n\PowerVault\SSA Folder\01-Clients\090018.00-Silver Creek Stream Bank Restoration\090018.00-Drawings\CDs\(L01-L12) IRRIGATION

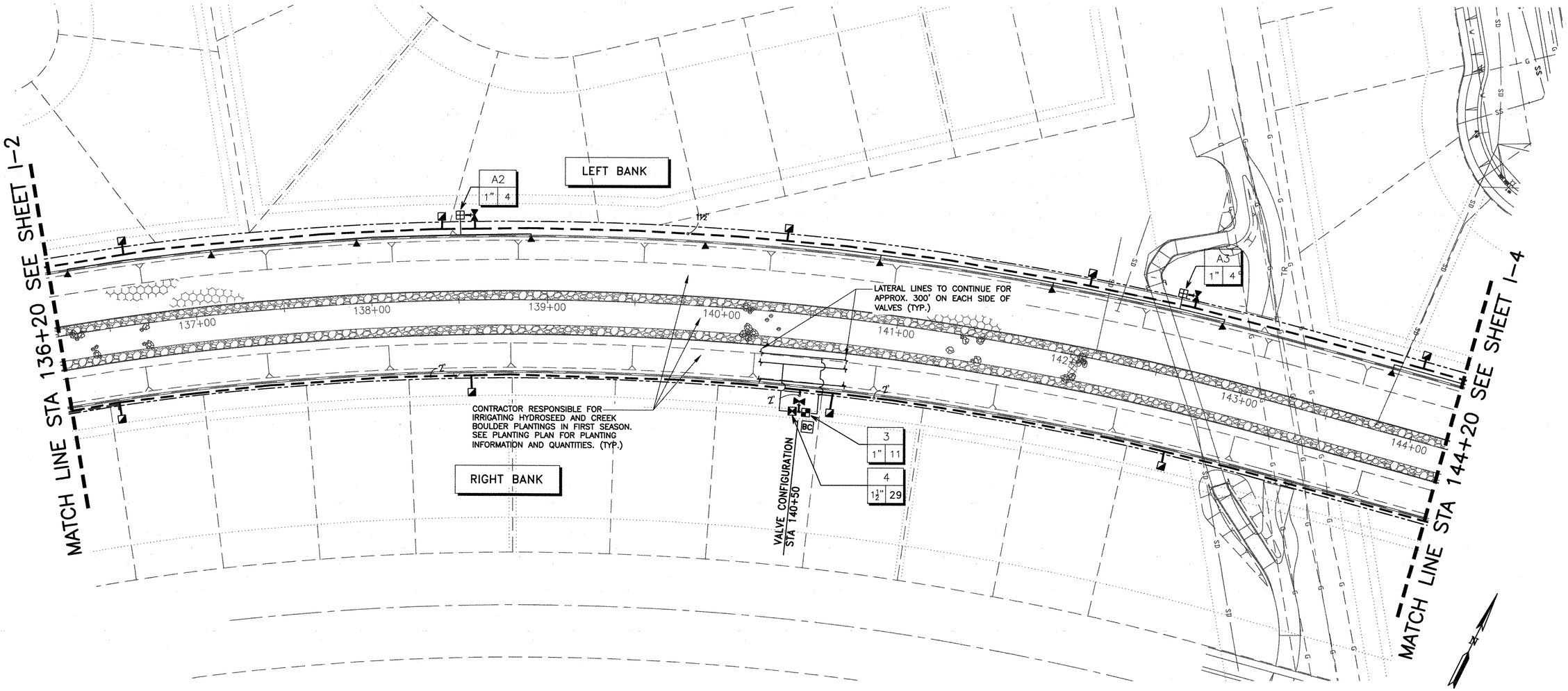

REV	DESCRIPTION	DATE	APPR.	REFERENCE INFORMATION AND NOTES

SSA LANDSCAPE ARCHITECTS INCORPORATED

DATE 05-18-10
DESIGN AH
DRAWN MB
CHECKED AH

ENGINEERING CERTIFICATION
LICENSED LANDSCAPE ARCHITECT STEVEN ROBERT DETWILER No. 2805 Exp. 1-31-12 STATE OF CALIFORNIA
PROJECT ENGINEER 5/18/10 DATE

Santa Clara Valley Water District
ACCEPTED BY DISTRICT
Dennis Cheung 6/1/10
DATE

PROJECT NAME AND SHEET DESCRIPTION:
LOWER SILVER CREEK REACHES 4, 5 & 6A
IRRIGATION PLAN STA 136+20 TO 144+20

SCALE 1"=30'
VERIFY SCALES 0 1"
BAR IS ONE INCH ON ORIGINAL DRAWING. IF NOT ONE INCH ON THIS SHEET, ADJUST SCALES ACCORDINGLY

PROJECT NUMBER 40264008
SHEET CODE: I-3
PAGE NUMBER: 158 OF 188

DOCUMENT NUMBER: CAD_XX-X-XXXX-XXXXX
4026-43149
USERNAME: Megan Mon 17 May 2010 06:13pm
FILENAME: \\powervault\SSA Folder\01-Clients\090018.00-Silver Creek Stream Bank Restoration\090018.00-Drawings\CDs\(.01-L12) IRRIGATION

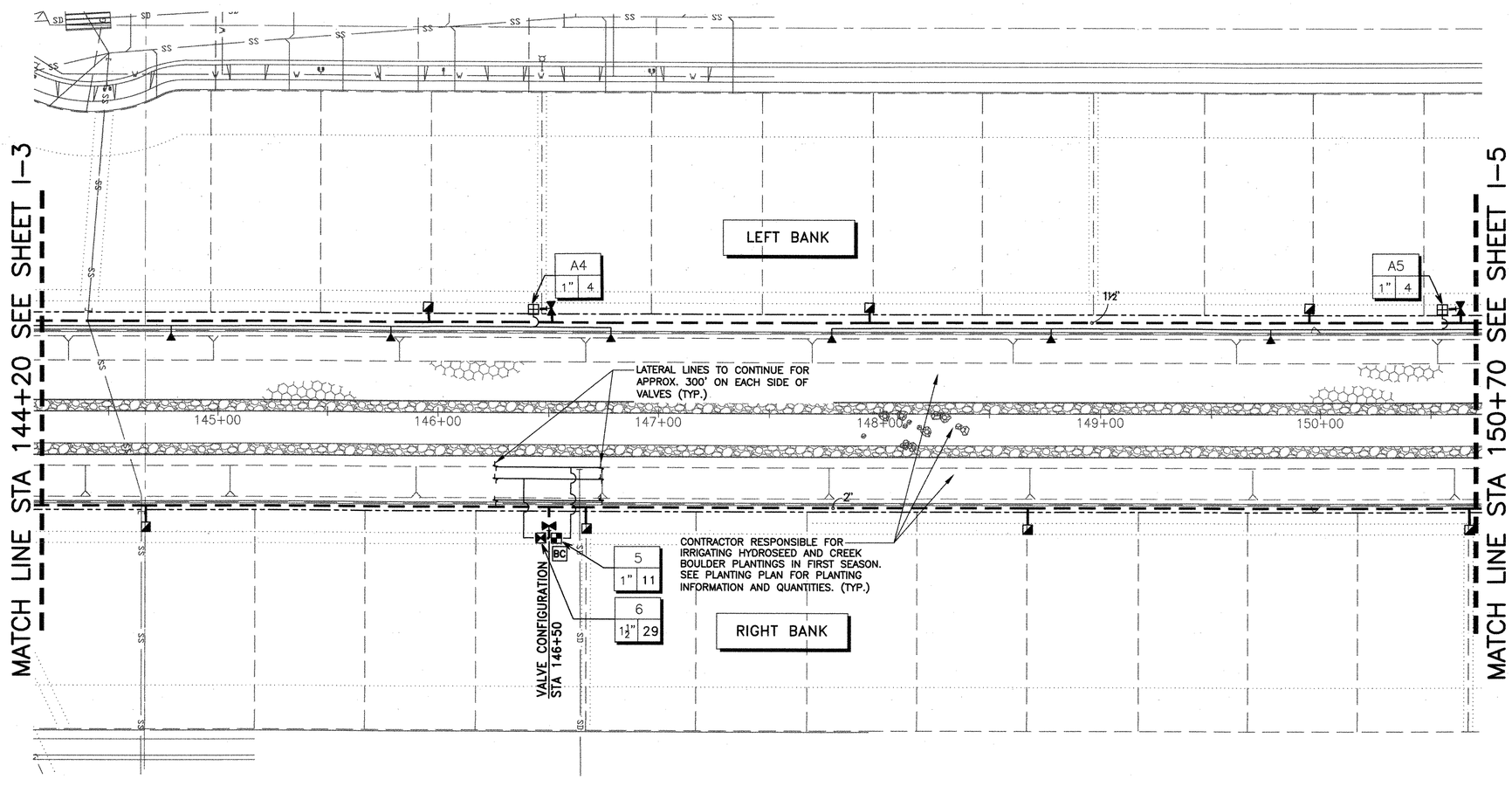

REV	DESCRIPTION	DATE	APPR.	REFERENCE INFORMATION AND NOTES

SSA LANDSCAPE ARCHITECTS INCORPORATED

DATE 05-18-10
DESIGN AH
DRAWN MB
CHECKED AH

ENGINEERING CERTIFICATION
LICENSED LANDSCAPE ARCHITECT STEVEN ROBERT SUTHERLAND No. 2805 Exp. 1-31-11 STATE OF CALIFORNIA
5/18/10
PROJECT ENGINEER DATE

Santa Clara Valley Water District
ACCEPTED BY DISTRICT
Dennis Cheung 6/1/10
DATE

PROJECT NAME AND SHEET DESCRIPTION:
LOWER SILVER CREEK REACHES 4, 5 & 6A
IRRIGATION PLAN STA 144+20 TO STA 150+70

SCALE 1"=30'
VERIFY SCALES 0 1"
BAR IS ONE INCH ON ORIGINAL DRAWING. IF NOT ONE INCH ON THIS SHEET, ADJUST SCALES ACCORDINGLY

PROJECT NUMBER 40264008
SHEET CODE: I-4
PAGE NUMBER: 159 OF 188

DOCUMENT NUMBER: CAD_XX-X-XXXX-XXXXX
USERNAME: Megan Mon 17 May 2010 06:14pm
FILENAME: \powervault\SSA Folder\01-Clients\090018.00-Silver Creek Stream Bank Restoration\090018.00-Drawings\CDs\(L01-L12) IRRIGATION
4026 - 43/50

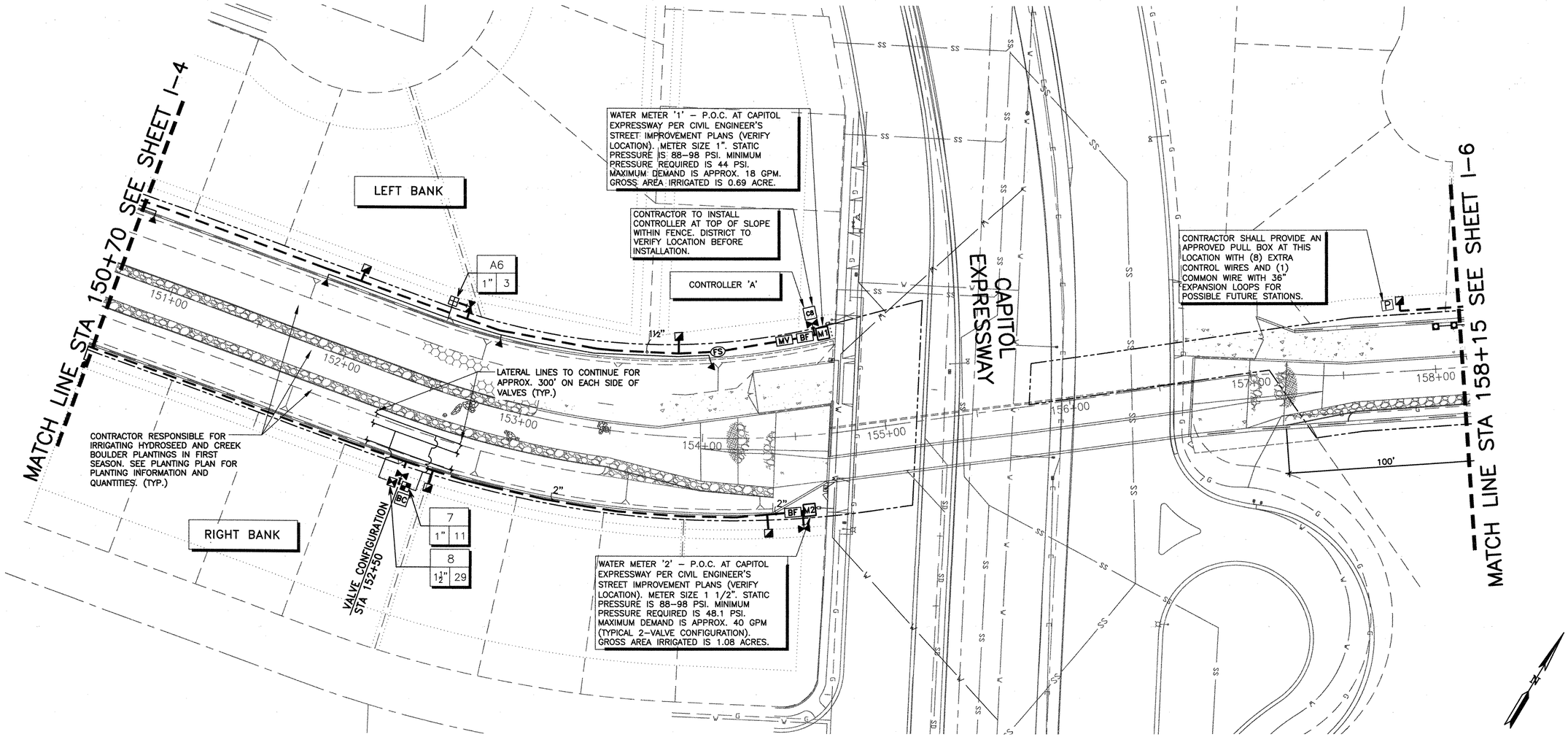

REV	DESCRIPTION	DATE	APPR.	REFERENCE INFORMATION AND NOTES

SSA LANDSCAPE ARCHITECTS INCORPORATED

DATE 05-18-10
DESIGN AH
DRAWN MB
CHECKED AH

ENGINEERING CERTIFICATION
LICENSED LANDSCAPE ARCHITECT STEVEN ROBERT SUTHERLAND No. 2805 EXP. 1-31-11 STATE OF CALIFORNIA
5/18/10
PROJECT ENGINEER DATE

Santa Clara Valley Water District
ACCEPTED BY DISTRICT
Dennis Cheong 6/1/10
DATE

PROJECT NAME AND SHEET DESCRIPTION:
LOWER SILVER CREEK REACHES 4, 5 & 6A
IRRIGATION PLAN STA 150+70 TO STA 158+15

SCALE 1"=30'
VERIFY SCALES 0 1"
BAR IS ONE INCH ON ORIGINAL DRAWING IF NOT ONE INCH ON THIS SHEET, ADJUST SCALES ACCORDINGLY

PROJECT NUMBER 40264008
SHEET CODE: 1-5
PAGE NUMBER: 160 OF 188

DOCUMENT NUMBER: CAD_XX-X-XXXX-XXXXX 4026-48151

USERNAME: Briana Tue 18 May 2010 10:02am
FILENAME: \\Powervault705n\PowerVault\SSA Folder\01-Clients\090018.00-Silver Creek Stream Bank Restoration\090018.00-Drawings\CDs\(L01-L12) IRRIGATION

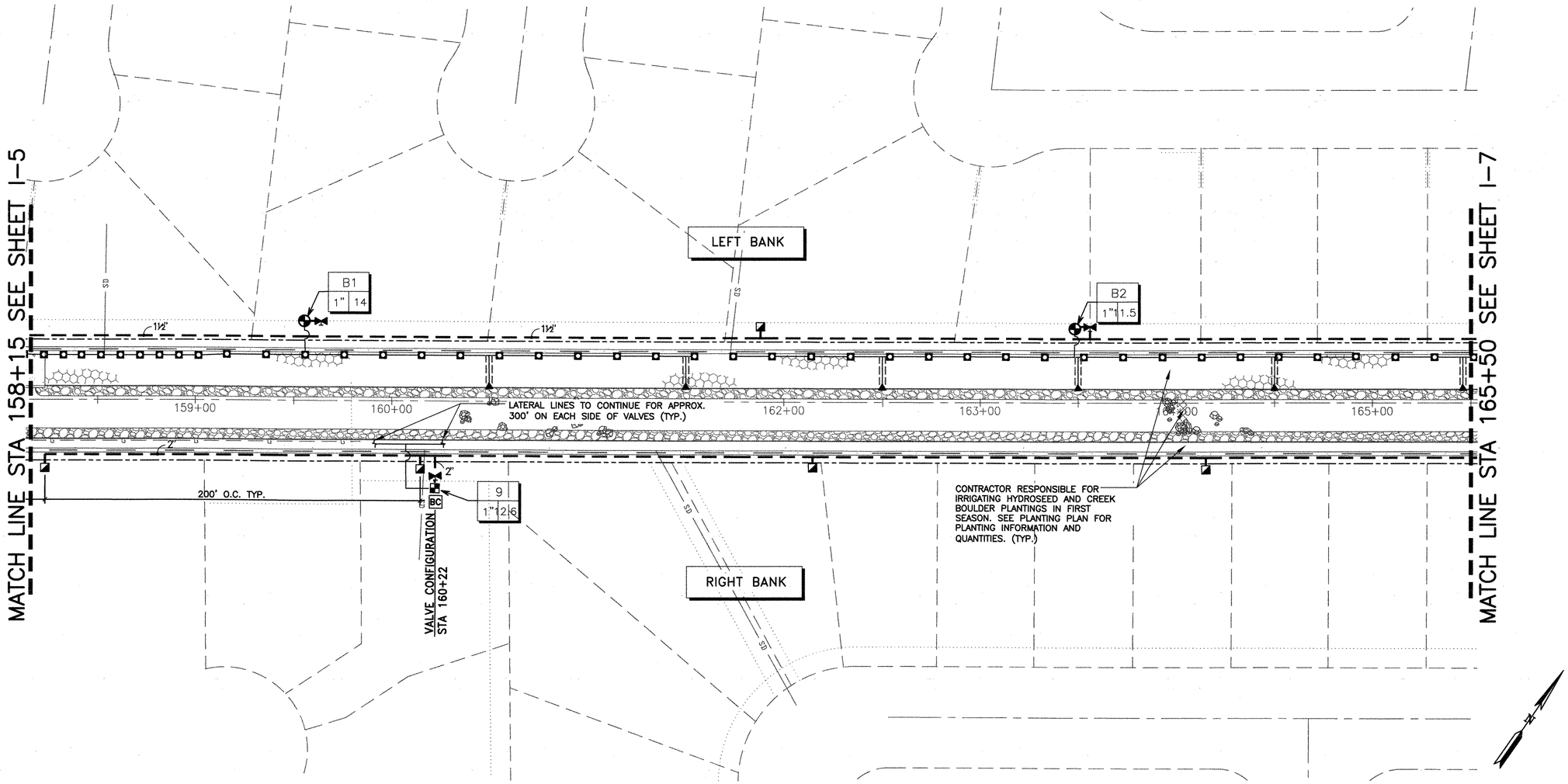

REV	DESCRIPTION	DATE	APPR.	REFERENCE INFORMATION AND NOTES

SSA LANDSCAPE ARCHITECTS INCORPORATED

DATE 05-18-10
DESIGN AH
DRAWN MB
CHECKED AH

ENGINEERING CERTIFICATION
LICENSED LANDSCAPE ARCHITECT STEVEN ROBERT SUTHERLAND No. 2605 Exp. 1-31-11 STATE OF CALIFORNIA
5/18/10
PROJECT ENGINEER DATE

Santa Clara Valley Water District
ACCEPTED BY DISTRICT
Dennis Chang 6/1/10
DATE

PROJECT NAME AND SHEET DESCRIPTION:
LOWER SILVER CREEK REACHES 4, 5 & 6A
IRRIGATION PLAN
STA 158+15 TO STA 165+50

SCALE 1"=30'
VERIFY SCALES 0 1"
BAR IS ONE INCH ON ORIGINAL DRAWING IF NOT ONE INCH ON THIS SHEET, ADJUST SCALES ACCORDINGLY

PROJECT NUMBER 40264008
SHEET CODE: I-6
PAGE NUMBER: 161 OF 188

DOCUMENT NUMBER: CAD_XX-X-XXXX-XXXXX
4026 - 43/52

USERNAME: Megan Mon 17 May 2010 06:14am
FILENAME: \\powervault\SSA Folder\01-Clients\090018.00-Silver Creek Stream Bank Restoration\090018.00-Drawings\CDs\(L01-L12) IRRIGATION

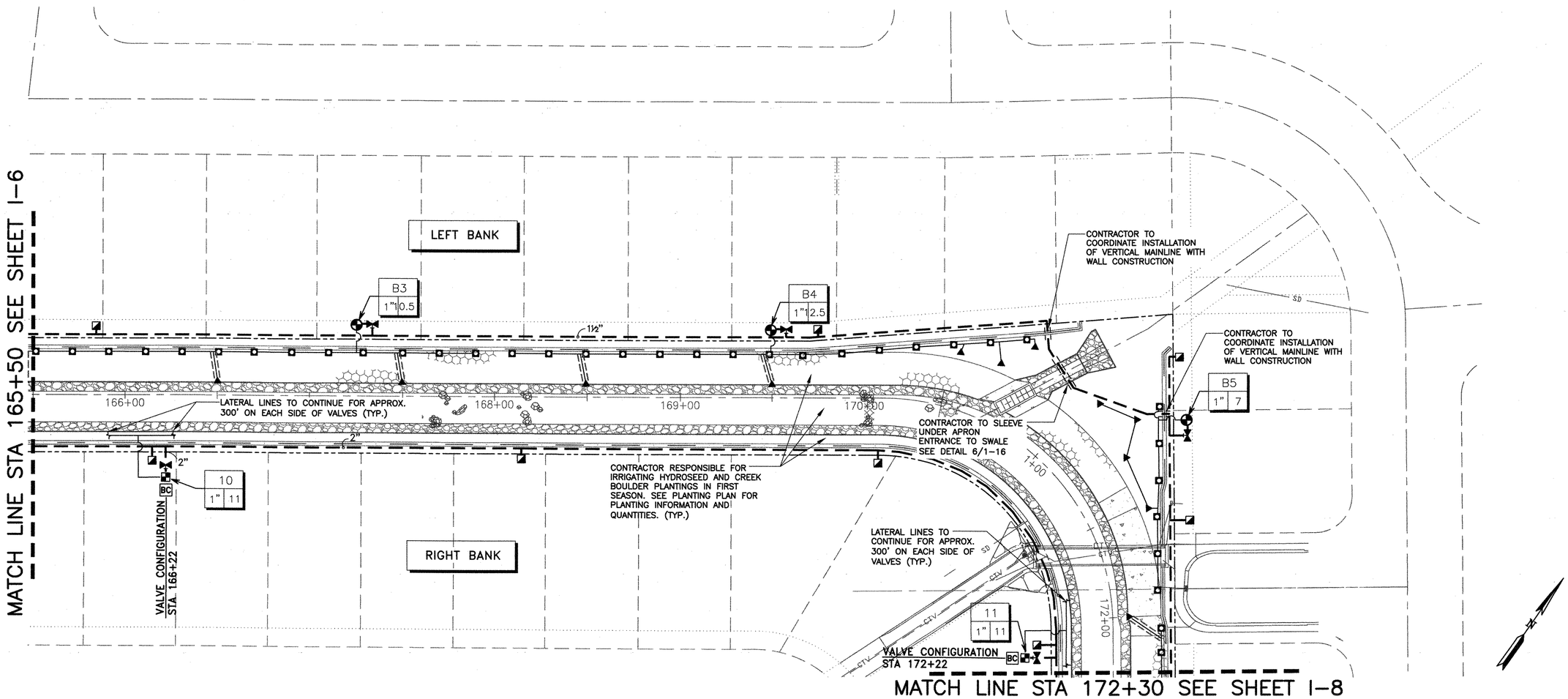

USERNAME: Briana Tue 18 May 2010 11:04am
FILENAME: \\Powervault705n\PowerVault\SSA Folder\01-Clients\090018.00-Silver Creek Stream Bank Restoration\090018.00-Drawings\Cds\(L01-L12) IRRIGATION

DOCUMENT NUMBER: CAD_XX-X-XXXX-XXXXX 40264-93/S3

REV	DESCRIPTION	DATE	APPR.	REFERENCE INFORMATION AND NOTES

SSA LANDSCAPE ARCHITECTS INCORPORATED

DATE 05-18-10
DESIGN AH
DRAWN MB
CHECKED AH

ENGINEERING CERTIFICATION
REGISTERED LANDSCAPE ARCHITECT STEVEN ROBERT SCHWARTZ No. 2805 Exp. 1-31-11 STATE OF CALIFORNIA
5/18/10
PROJECT ENGINEER DATE

Santa Clara Valley Water District
ACCEPTED BY DISTRICT
Dennis Cheong 6/1/10
DATE

PROJECT NAME AND SHEET DESCRIPTION:

LOWER SILVER CREEK REACHES 4, 5 & 6A

IRRIGATION PLAN STA 165+50 TO STA 172+30

SCALE 1"=30'
VERIFY SCALES 0 1"
BAR IS ONE INCH ON ORIGINAL DRAWING IF NOT ONE INCH ON THIS SHEET, ADJUST SCALES ACCORDINGLY

PROJECT NUMBER 40264008
SHEET CODE: I-7
PAGE NUMBER: 162 OF 188

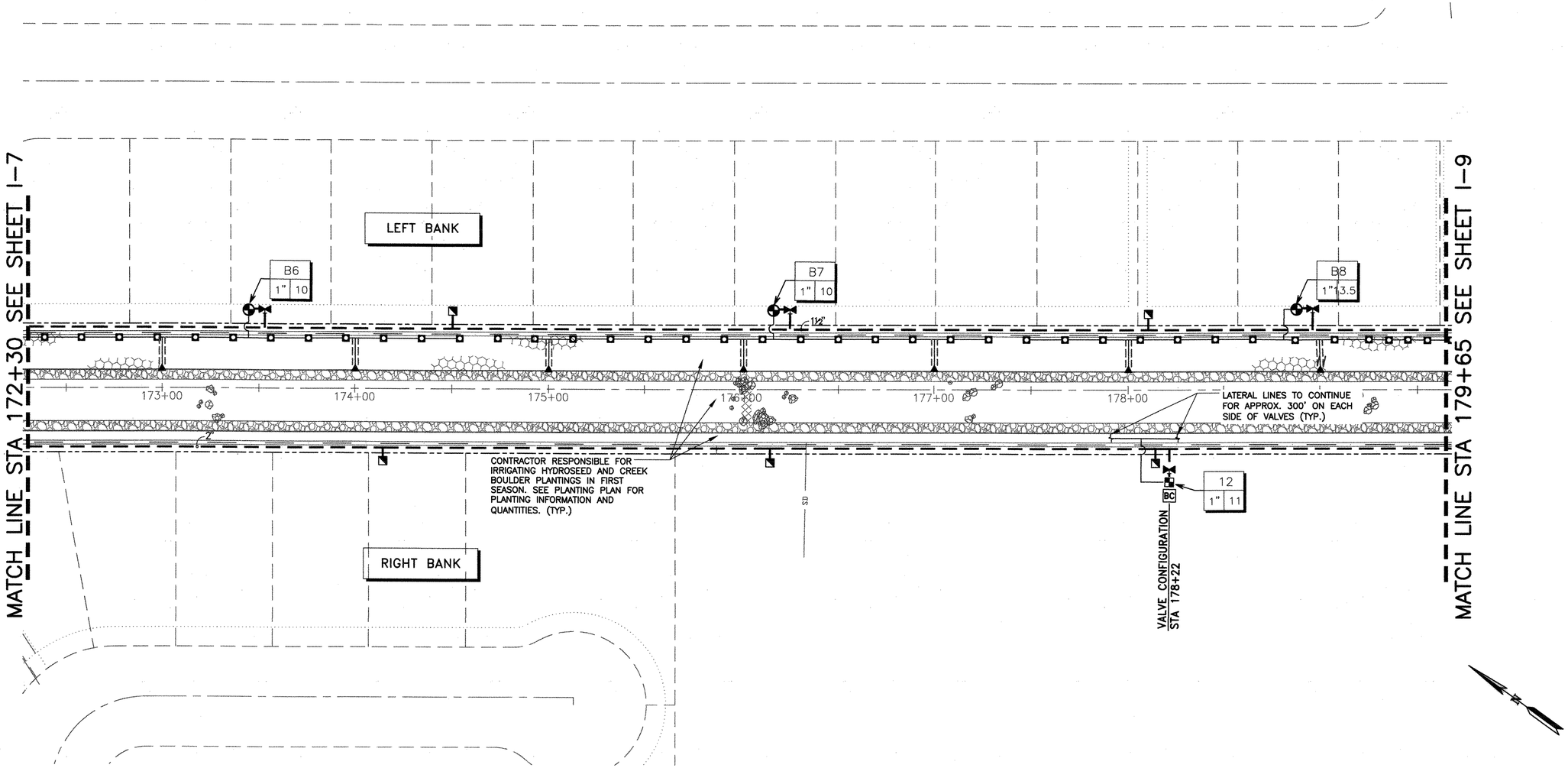

USERNAME: Megan Mon 17 May 2010 06:15pm
FILENAME: \\powervault\705n\PowerVault\SSA Folder\01-Clients\090018.00-Silver Creek Stream Bank Restoration\090018.00-Drawings\CDs\(L01-L12) IRRIGATION

4026-43/59

DOCUMENT NUMBER: CAD_XX-X-XXXX-XXXXX

REV	DESCRIPTION	DATE	APPR.	REFERENCE INFORMATION AND NOTES

SSA LANDSCAPE ARCHITECTS INCORPORATED

DATE 05-18-10
DESIGN AH
DRAWN MB
CHECKED AH

ENGINEERING CERTIFICATION
LICENSED LANDSCAPE ARCHITECT STEVEN ROBERT SUTHERLAND No. 2805 Exp. 1-31-12 STATE OF CALIFORNIA
PROJECT ENGINEER 5/18/10 DATE

Santa Clara Valley Water District
ACCEPTED BY DISTRICT
Dennis Cheung 6/1/10
DATE

PROJECT NAME AND SHEET DESCRIPTION:
LOWER SILVER CREEK REACHES 4, 5 & 6A
IRRIGATION PLAN
STA 172+30 TO STA 179+65

SCALE 1"=30'
VERIFY SCALES 0 1"
BAR IS ONE INCH ON ORIGINAL DRAWING. IF NOT ONE INCH ON THIS SHEET, ADJUST SCALES ACCORDINGLY

PROJECT NUMBER 40264008
SHEET CODE: I-8
PAGE NUMBER: 163 OF 188

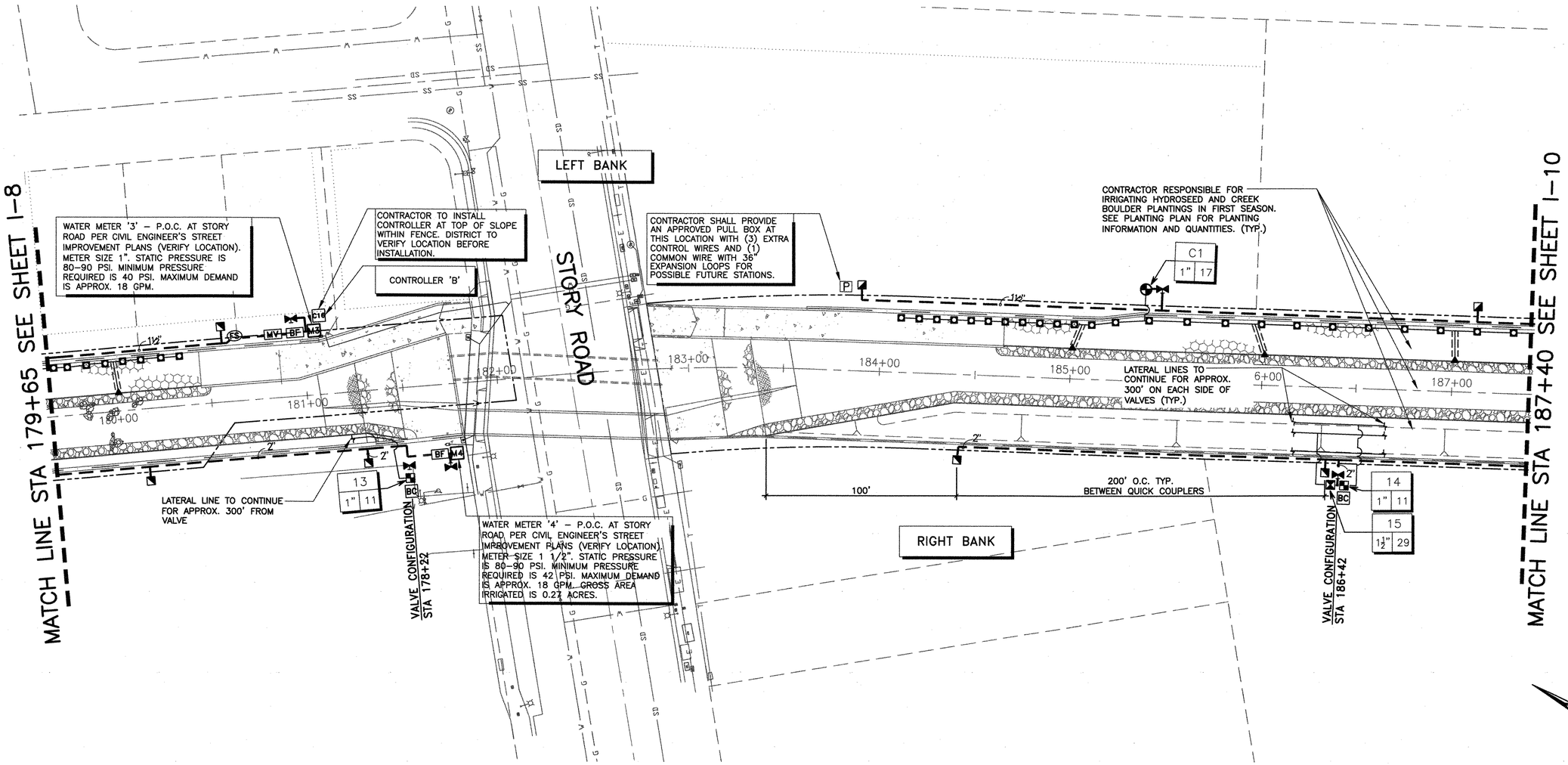

REV	DESCRIPTION	DATE	APPR.	REFERENCE INFORMATION AND NOTES

SSA LANDSCAPE ARCHITECTS INCORPORATED

DATE 05-18-10
DESIGN AH
DRAWN MB
CHECKED AH

ENGINEERING CERTIFICATION
LICENSED LANDSCAPE ARCHITECT STEVEN HERBERT SUTHERLAND No. 2805 Exp. 1-31-12 CALIFORNIA
5/18/10
PROJECT ENGINEER DATE

Santa Clara Valley Water District

ACCEPTED BY DISTRICT
Dennis Chang 6/1/10
DATE

PROJECT NAME AND SHEET DESCRIPTION:

LOWER SILVER CREEK REACHES 4, 5 & 6A

IRRIGATION PLAN STA 179+65 TO STA 187+40

SCALE 1"=30'
VERIFY SCALES 0 1"
BAR IS ONE INCH ON ORIGINAL DRAWING IF NOT ONE INCH ON THIS SHEET, ADJUST SCALES ACCORDINGLY

PROJECT NUMBER 40264008
SHEET CODE: I-9
PAGE NUMBER: 164 OF 188

DOCUMENT NUMBER: CAD_XX-X-XXXX-XXXXX

USERNAME: Megan Mon 17 May 2010 06:15pm
FILENAME: \\powervault\SSA Folder\01-Clients\090018.00-Silver Creek Stream Bank Restoration\090018.00-Drawings\CDs\(L01-L12) IRRIGATION

4026-43/55

USERNAME: Briana Tue 18 May 2010 10:13am
FILENAME: \\Powervault705n\PowerVault\SSA Folder\01-Clients\090018.00-Silver Creek Stream Bank Restoration\090018.00-Drawings\Cba\(L01-L12) IRRIGATION

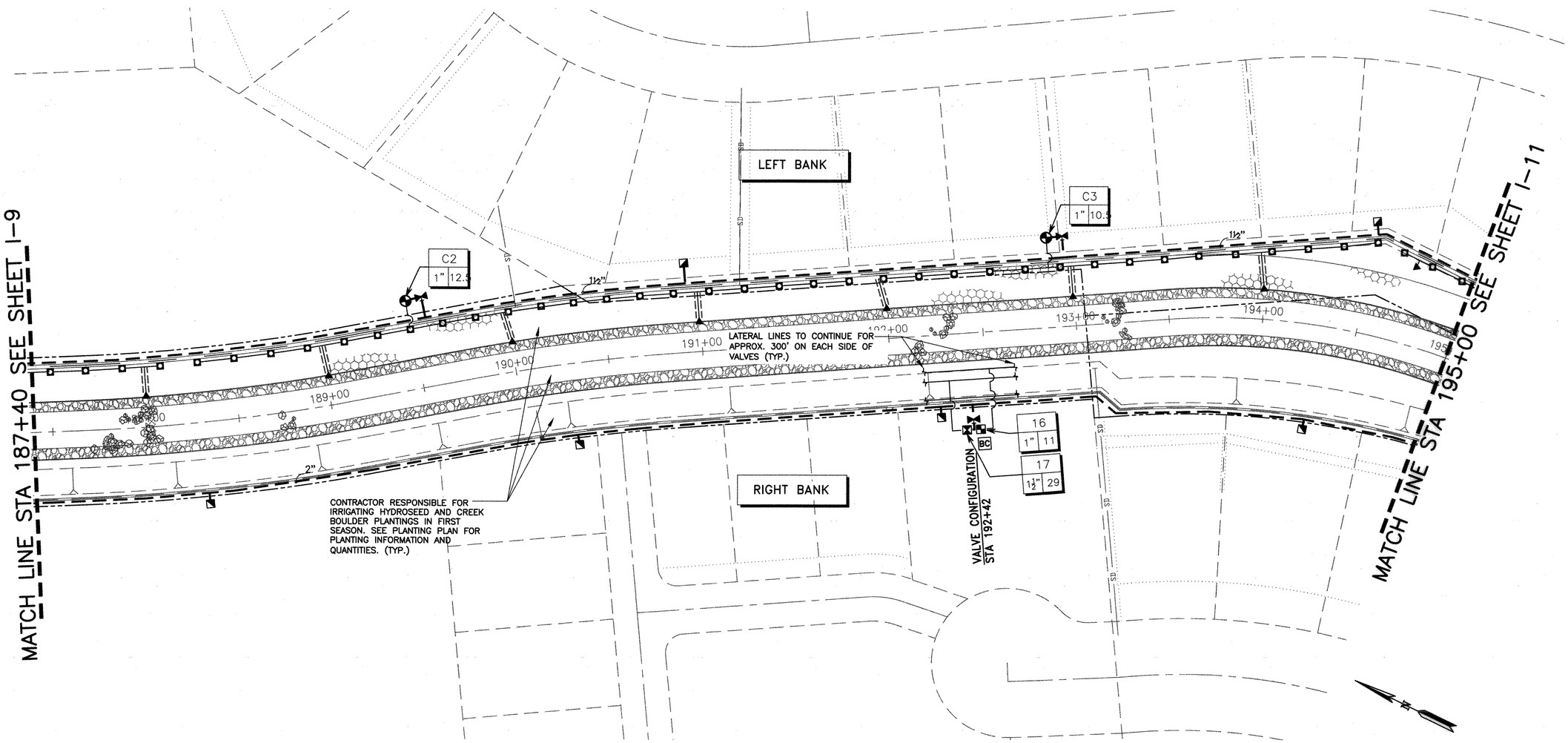

REV	DESCRIPTION	DATE	APPR.	REFERENCE INFORMATION AND NOTES

SSA LANDSCAPE ARCHITECTS INCORPORATED

DATE 05-18-10
DESIGN AH
DRAWN MB
CHECKED AH

ENGINEERING CERTIFICATION
LICENSED LANDSCAPE ARCHITECT STEVEN ROBERT SUTHERLAND No. 2805 Exp. 1-31-12 STATE OF CALIFORNIA
5/18/10
PROJECT ENGINEER DATE

Santa Clara Valley Water District
ACCEPTED BY DISTRICT
Dennis Cheung 6/1/10
DATE

PROJECT NAME AND SHEET DESCRIPTION:
LOWER SILVER CREEK REACHES 4, 5 & 6A
IRRIGATION PLAN STA 187+40 TO STA 195+00

SCALE 1"=30'
VERIFY SCALES 0 1"
BAR IS ONE INCH ON ORIGINAL DRAWING IF NOT ONE INCH ON THIS SHEET, ADJUST SCALES ACCORDINGLY

PROJECT NUMBER 40264008
SHEET CODE: I-10
PAGE NUMBER: 165 OF 188

DOCUMENT NUMBER: CAD_XX-X-XXXX-XXXXX 4026 - 43/56

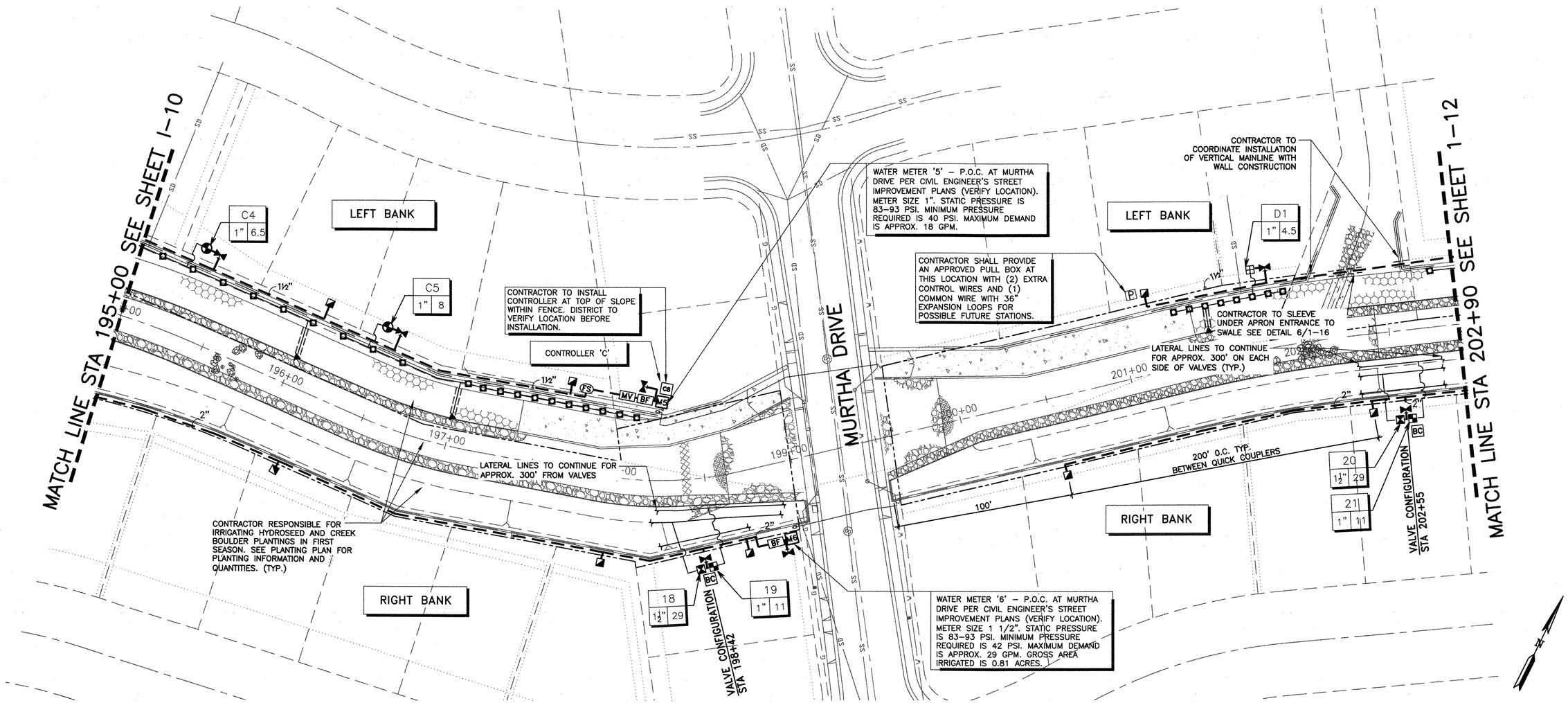

REV	DESCRIPTION	DATE	APPR.	REFERENCE INFORMATION AND NOTES

SSA LANDSCAPE ARCHITECTS INCORPORATED

DATE 05-18-10
DESIGN AH
DRAWN MB
CHECKED AH

ENGINEERING CERTIFICATION
LICENSED LANDSCAPE ARCHITECT STEVEN ROBERT SUTHERLAND No. 2805 Exp. 1-31-12 STATE OF CALIFORNIA
5/18/10
PROJECT ENGINEER DATE

Santa Clara Valley Water District
ACCEPTED BY DISTRICT
Dennis Chiang 6/1/10
DATE

PROJECT NAME AND SHEET DESCRIPTION:
LOWER SILVER CREEK REACHES 4, 5 & 6A
IRRIGATION PLAN STA 195+00 TO STA 202+90

SCALE 1"=30'
VERIFY SCALES 0 1"
BAR IS ONE INCH ON ORIGINAL DRAWING IF NOT ONE INCH ON THIS SHEET, ADJUST SCALES ACCORDINGLY

PROJECT NUMBER 40264008
SHEET CODE: I-11
PAGE NUMBER: 166 OF 188

DOCUMENT NUMBER: CAD_XX-X-XXXX-XXXXX
4026-43/57

USERNAME: Briana Tue 18 May 2010 11:28am
FILENAME: \\Powervault705n\PowerVault\SSA Folder\01-Clients\090018.00-Silver Creek Stream Bank Restoration\090018.00-Drawings\Cds\(L01-L12) IRRIGATION

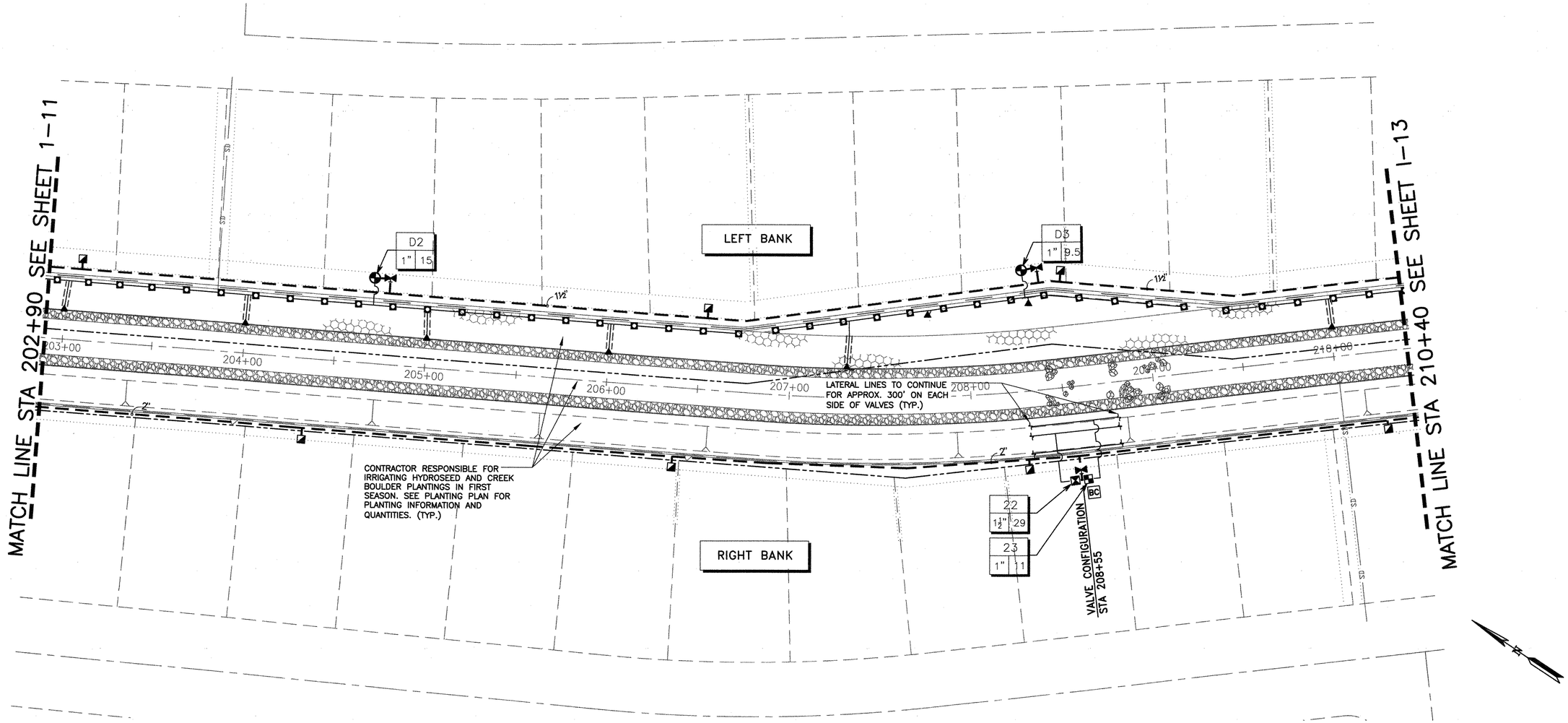

REV	DESCRIPTION	DATE	APPR.	REFERENCE INFORMATION AND NOTES

SSA LANDSCAPE ARCHITECTS INCORPORATED

DATE	05-18-10
DESIGN	AH
DRAWN	MB
CHECKED	AH

ENGINEERING CERTIFICATION

LICENSED LANDSCAPE ARCHITECT STEVEN ROBERT SUTHERLAND No. 2805 Exp. 1-31-11 STATE OF CALIFORNIA

PROJECT ENGINEER — DATE 5/18/10

Santa Clara Valley Water District

ACCEPTED BY DISTRICT

Dennis Chiang — DATE 6/1/10

PROJECT NAME AND SHEET DESCRIPTION:

LOWER SILVER CREEK REACHES 4, 5 & 6A

IRRIGATION PLAN STA 202+90 TO STA 210+40

SCALE: 1"=30'

VERIFY SCALES: 0 — 1" BAR IS ONE INCH ON ORIGINAL DRAWING IF NOT ONE INCH ON THIS SHEET, ADJUST SCALES ACCORDINGLY

PROJECT NUMBER: 40264008

SHEET CODE: I-12

PAGE NUMBER: 167 OF 188

DOCUMENT NUMBER: CAD_XX-X-XXXX-XXXXX

4026 - 43158

USERNAME: Megan Mon 17 May 2010 06:16pm
FILENAME: \\powervault\SSA Folder\01-Clients\090018.00-Silver Creek Stream Bank Restoration\090018.00-Drawings\CDs\(L01-L12) IRRIGATION

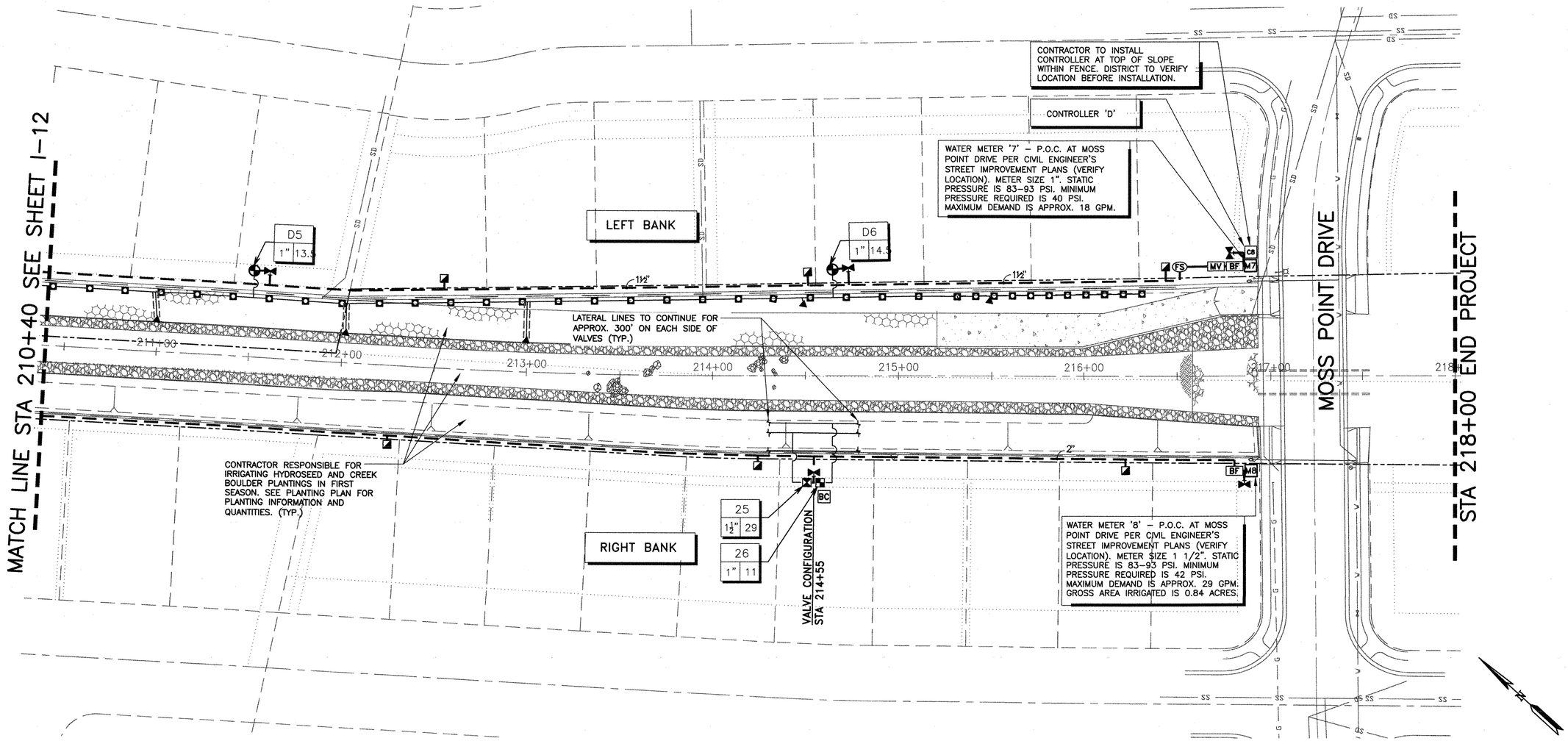

REV	DESCRIPTION	DATE	APPR.	REFERENCE INFORMATION AND NOTES

SSA LANDSCAPE ARCHITECTS INCORPORATED

DATE 05-18-10
DESIGN AH
DRAWN MB
CHECKED AH

ENGINEERING CERTIFICATION
LICENSED LANDSCAPE ARCHITECT STEVEN ROBERT SCHMIDT No. 2805 Exp. 1-31-12 CALIFORNIA
5/18/10
PROJECT ENGINEER DATE

Santa Clara Valley Water District

ACCEPTED BY DISTRICT
Dennis Cheung 6/1/10
DATE

PROJECT NAME AND SHEET DESCRIPTION:
LOWER SILVER CREEK REACHES 4, 5 & 6A
IRRIGATION PLAN STA 210+40 TO STA 218+00

SCALE 1"=30'
VERIFY SCALES 0 1"
BAR IS ONE INCH ON ORIGINAL DRAWING IF NOT ONE INCH ON THIS SHEET, ADJUST SCALES ACCORDINGLY

PROJECT NUMBER 40264008
SHEET CODE: I-13
PAGE NUMBER: 168 OF 188

DOCUMENT NUMBER: CAD_XX-X-XXXX-XXXXX

USERNAME: Megan Mon 17 May 2010 06:17pm
FILENAME: \\powervault\705n\PowerVault\SSA Folder\01-Clients\090018.00-Silver Creek Stream Bank Restoration\090018.00-Drawings\CDs\(L01-L12) IRRIGATION

40264 - 13/59

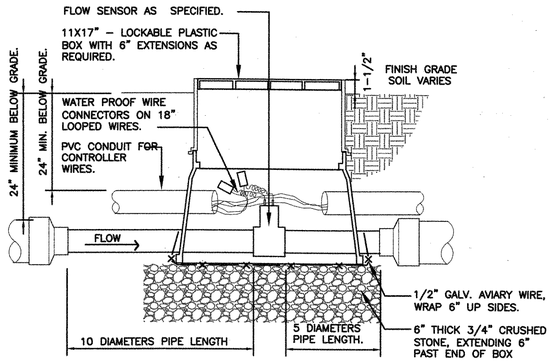

5 FLOW SENSOR
SCALE: 1" = 1'–0"

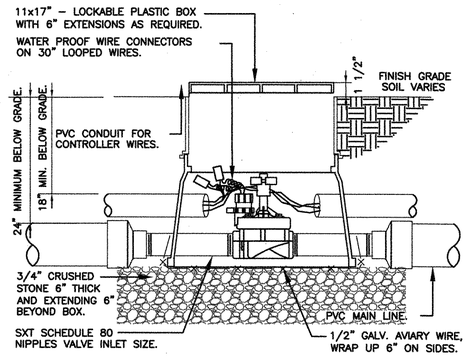

3 MASTER VALVE
SCALE: 1 1/2" = 1'–0"

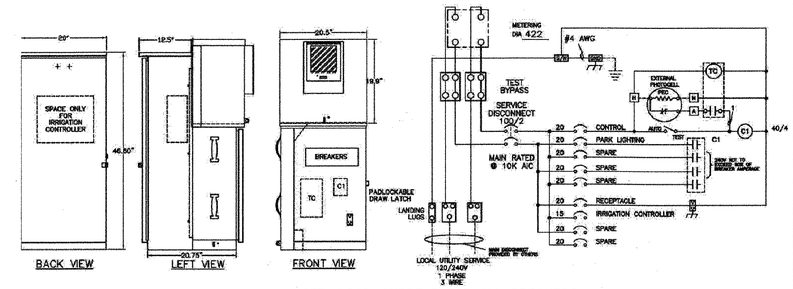

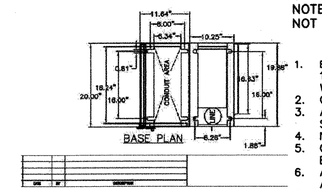

NOTE: LOAD CURRENT FOR ALL BREAKERS NOT TO EXCEED 80% OF BREAKER AMPERAGE

ENCLOSURE CONSTRUCTION NOTES

1. EXTERIOR 12 GA. H.D. GAVL. STEEL AND INTERIOR 14 GA. COLD ROLLED STEEL ELECTRICALLY WELDED AND REINFORCED WHERE REQUIRED.
2. CONSTRUCTION WILL BE NEMA 3R, RAINTIGHT.
3. ALL NUTS, BOLTS AND SCREWS WILL BE STAINLESS STEEL.
4. NAMEPLATES WILL BE PROVIDED AS REQUIRED.
5. CONTROL WIRING WILL BE MARKED AT BOTH ENDS BY PERMANENT WIRE MARKERS.
6. A PLASTIC COVERED WIRING DIAGRAM WILL BE ATTACHED TO THE INSIDE OF THE FRONT DOOR.
7. ENCLOSURE WILL BE FACTORY WIRED AND CONFORM TO REQUIRED NEMA AND WILL 508A STANDARDS.
8. COLOR TO BE: RANCH GREEN

TESCO INDUSTRIAL CONTROL PANEL

SUITABLE ONLY FOR USE AS SERVICE EQUIPMENT

CITY OF SAN JOSE PARKS
ELECTRICAL SCHEMATICS
DATE 11/18/04 | DRAWN BY TL | CHECK BY | SHEET 1 OF 1 | DRAWING # SAN JOSE-CO

1 PEDESTAL CONTROLLER WITH ELECTRIC METER
NTS

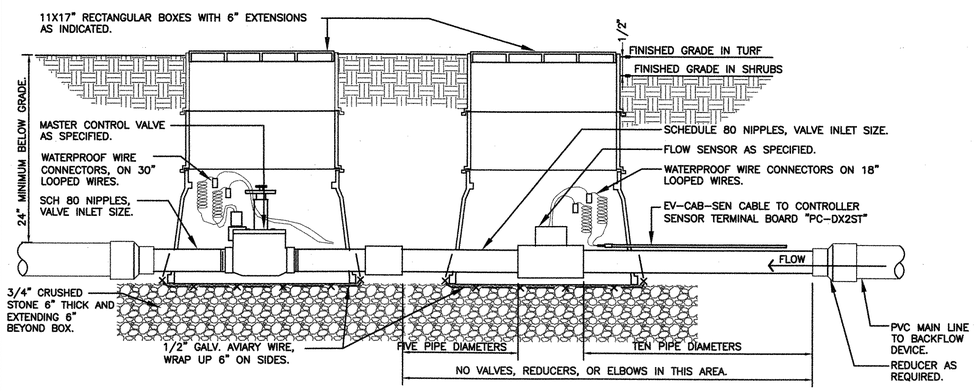

6 MASTER VALVE / FLOW SENSOR ASSEMBLY
SCALE: 1" = 1'–0"

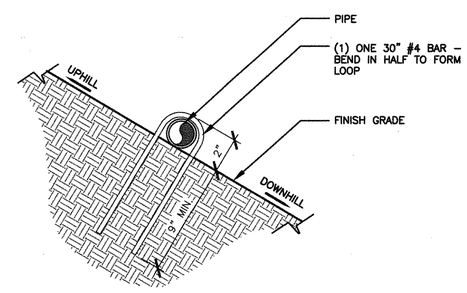

NOTE: PLACE AT 3'–0" O.C. AND AT EVERY PVC TEE

4 PVC PIPE ANCHOR ON GRADE
SCALE:1 1/2" = 1'–0"

SCRK–13

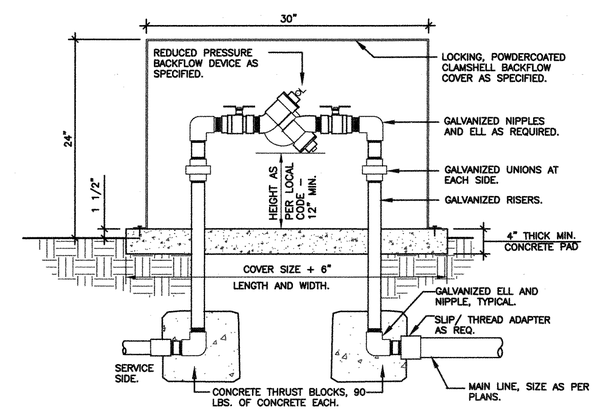

2 BACKFLOW ASSEMBLY
SCALE: 1" = 1'–0"

REV	DESCRIPTION	DATE	APPR.	REFERENCE INFORMATION AND NOTES

SSA LANDSCAPE ARCHITECTS INCORPORATED

DATE 05–18–10
DESIGN AH
DRAWN MB
CHECKED AH

ENGINEERING CERTIFICATION
LICENSED LANDSCAPE ARCHITECT STEVEN ROBERT SUPERNAUGH No. 2805 Exp. 1–31–12 STATE OF CALIFORNIA
5/18/10
PROJECT ENGINEER DATE

Santa Clara Valley Water District
ACCEPTED BY DISTRICT
Dennis Cheong 6/1/10
DATE

PROJECT NAME AND SHEET DESCRIPTION:
LOWER SILVER CREEK REACHES 4, 5 & 6A
IRRIGATION DETAILS

SCALE: AS SHOWN
VERIFY SCALES: 0 — 1"
BAR IS ONE INCH ON ORIGINAL DRAWING IF NOT ONE INCH ON THIS SHEET, ADJUST SCALES ACCORDINGLY

PROJECT NUMBER: 40264008
SHEET CODE: I–14
PAGE NUMBER: 169 OF 188

USERNAME: Briana Mon 17 May 2010 05:55pm
FILENAME: \\Powervault705n\PowerVault\SSA Folder\01–Clients\090018.00–Silver Creek Stream Bank Restoration\090018.00–Drawings\Cba\(L014–L017) IRRIGATI

DOCUMENT NUMBER: CAD_XX–X–XXXX–XXXXX

4026-43160

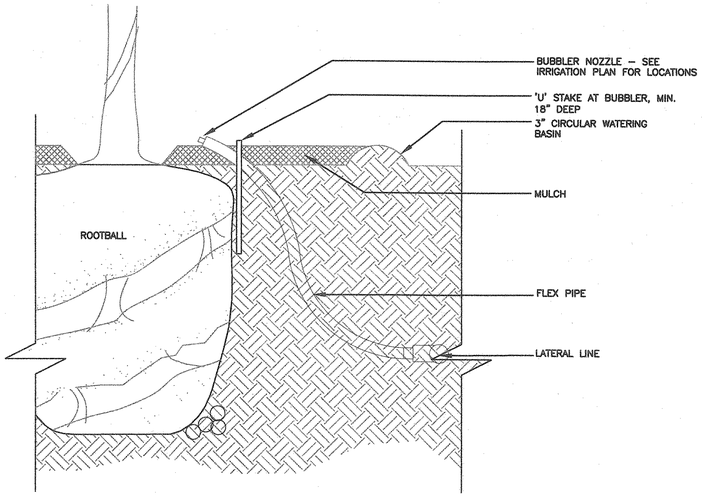

5 VINE AND TREE BUBBLER
SCALE: 1" = 1'-0"

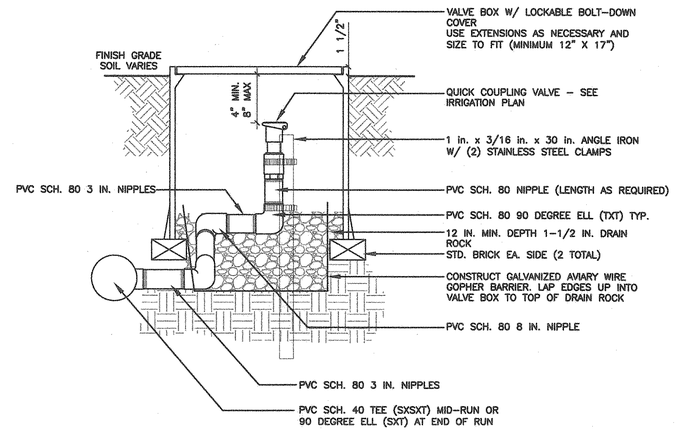

3 QUICK COUPLER
SCALE: 1/4" = 1'-0"

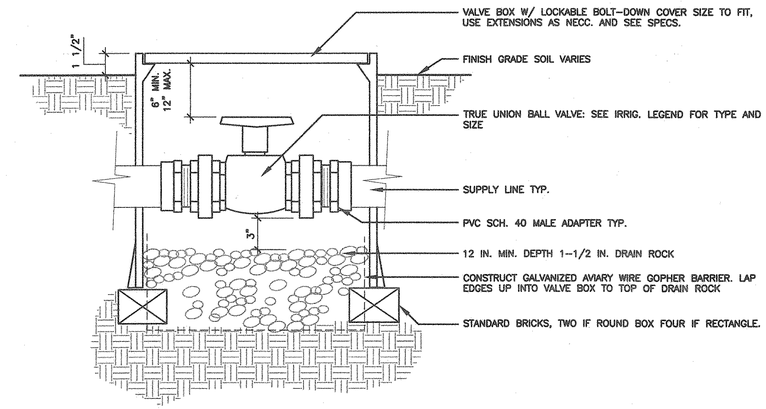

1 BALL VALVE
SCALE: 1/2" = 1'-0"

① 18 – 24" COILED WIRE
② WEATHERPROOF CONNECTORS (2)
③ SVC – X00

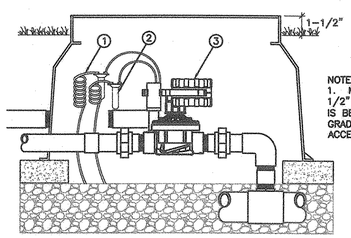

NOTE:
1. MOUNT CONTROLLER ON A 1/2" PVC PIPE IF THE VALVE IS BELOW 18" FROM FINISH GRADE FOR CONVENIENT ACCESS

6 SINGLE VALVE – BATTERY OPERATED CONTROLLER
NTS

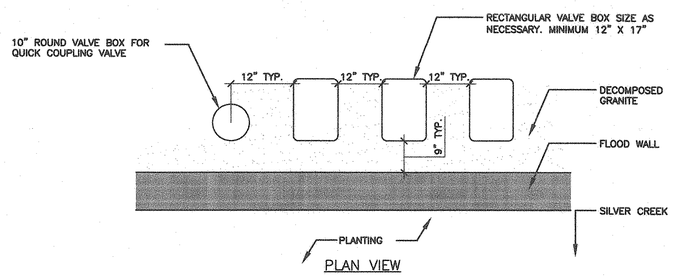

NOTES:

1. CENTER VALVE BOX OVER REMOTE CONTROL VALVE OR BALL VALVE TO FACILITATE SERVICING VALVE.
2. SET BOXES 1 1/2" ABOVE FINISH GRADE IN DECOMPOSED GRANITE AREA.
3. SET BOXES PARALLEL TO EACH OTHER AND PERPENDICULAR TO EDGE OF WALL.
4. AVOID HEAVILY COMPACTING SOIL AROUND VALVE BOXES TO PREVENT COLLAPSE AND DEFORMATION OF VALVE BOX SIDES.
5. INSTALL EXTENSION BY VALVE BOX MANUFACTURER AS REQUIRED TO COMPLETELY ENCLOSE ASSEMBLY FOR EASY ACCESS.

4 VALVE BOX LAYOUT
SCALE: 1/2" = 1'-0"

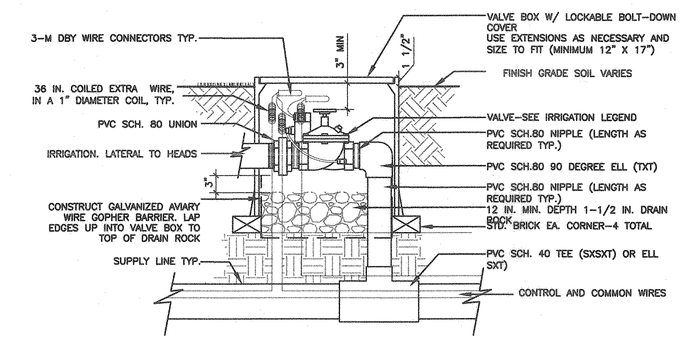

2 REMOTE CONTROL VALVE
SCALE: 1" = 1'-0"

REV	DESCRIPTION	DATE	APPR.	REFERENCE INFORMATION AND NOTES

SSA LANDSCAPE ARCHITECTS INCORPORATED

DATE: 05-18-10
DESIGN: AH
DRAWN: MB
CHECKED: AH

ENGINEERING CERTIFICATION
LICENSED LANDSCAPE ARCHITECT STEVEN ROBERT SUTHERLAND No. 2805 Exp. 1-31-12 STATE OF CALIFORNIA
5/18/10
PROJECT ENGINEER DATE

Santa Clara Valley Water District
ACCEPTED BY DISTRICT
Dennis Cheung 6/1/10
DATE

PROJECT NAME AND SHEET DESCRIPTION:
LOWER SILVER CREEK REACHES 4, 5 & 6A
IRRIGATION DETAILS

SCALE: AS SHOWN
VERIFY SCALES: 0 1" BAR IS ONE INCH ON ORIGINAL DRAWING IF NOT ONE INCH ON THIS SHEET, ADJUST SCALES ACCORDINGLY
PROJECT NUMBER: 40264008
SHEET CODE: I-15
PAGE NUMBER: 170 OF 188

USERNAME: Briana Mon 17 May 2010 05:57pm
FILENAME: \\Powervault\SSA Folder\01-Clients\090018.00-Silver Creek Stream Bank Restoration\090018.00-Drawings\CDs\(L014-L017) IRRIGATI
DOCUMENT NUMBER: CAD_XX-X-XXXX-XXXXX 4026-43161

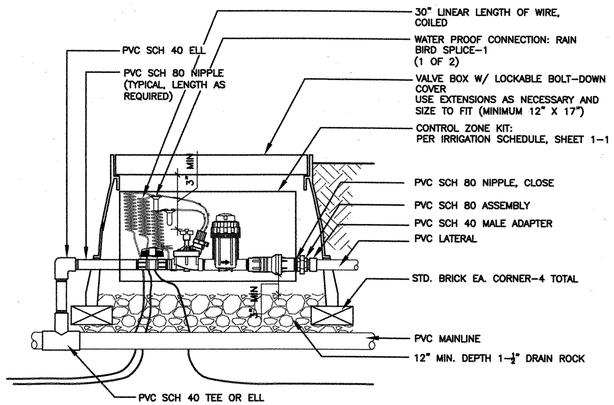

5 DRIP KIT VALVE BOX ASSEMBLY AT REVEGETATION PLANTING
SCALE: 1" = 1'-0"

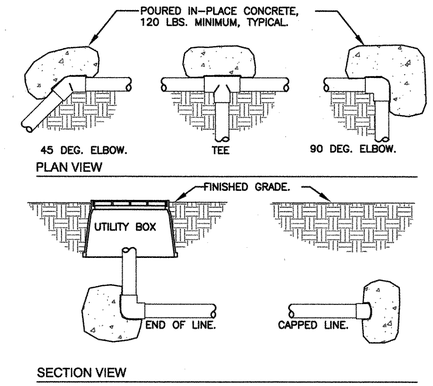

3 THRUST BLOCKING
SCALE: 3/4" = 1'-0"

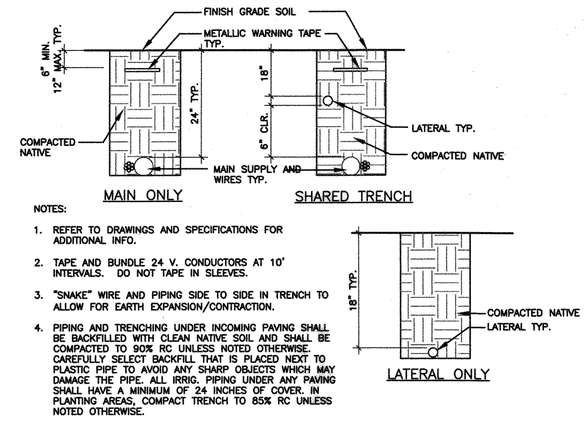

NOTES:

1. REFER TO DRAWINGS AND SPECIFICATIONS FOR ADDITIONAL INFO.
2. TAPE AND BUNDLE 24 V. CONDUCTORS AT 10' INTERVALS. DO NOT TAPE IN SLEEVES.
3. "SNAKE" WIRE AND PIPING SIDE TO SIDE IN TRENCH TO ALLOW FOR EARTH EXPANSION/CONTRACTION.
4. PIPING AND TRENCHING UNDER INCOMING PAVING SHALL BE BACKFILLED WITH CLEAN NATIVE SOIL AND SHALL BE COMPACTED TO 90% RC UNLESS NOTED OTHERWISE. CAREFULLY SELECT BACKFILL THAT IS PLACED NEXT TO PLASTIC PIPE TO AVOID ANY SHARP OBJECTS WHICH MAY DAMAGE THE PIPE. ALL IRRIG. PIPING UNDER ANY PAVING SHALL HAVE A MINIMUM OF 24 INCHES OF COVER. IN PLANTING AREAS, COMPACT TRENCH TO 85% RC UNLESS NOTED OTHERWISE.

1 TRENCHING WITHIN LANDSCAPE
SCALE: 1" = 1'-0"

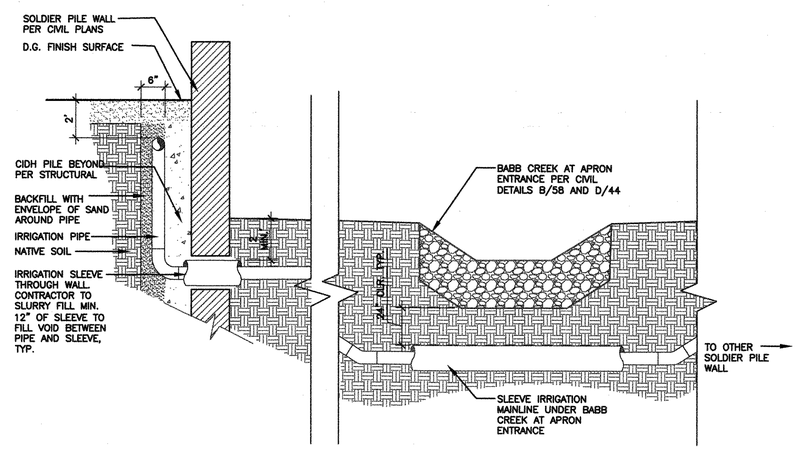

6 PIPING AT SOLDIER WALLS ADN BABB CREEK CROSSINGS
SCALE: N.T.S

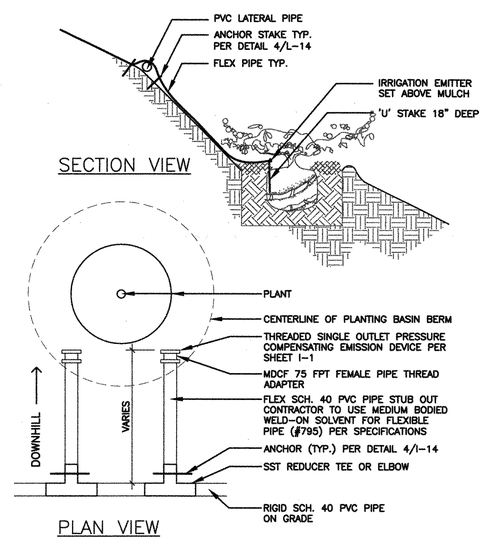

4 DRIP EMITTER AT REVEGETATION PLANTER
SCALE: NTS

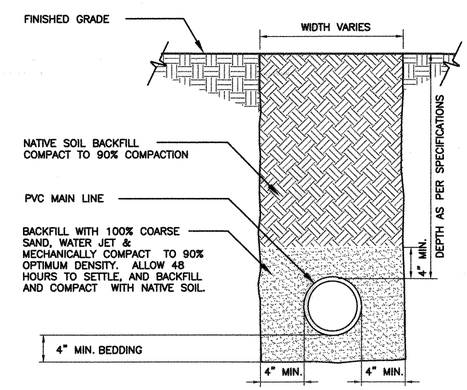

2 MAINLINE WITH SAND BEDDING
SCALE: 1 1/2" = 1'-0"

REV	DESCRIPTION	DATE	APPR.	REFERENCE INFORMATION AND NOTES

SSA LANDSCAPE ARCHITECTS INCORPORATED

DATE 05-18-10
DESIGN AH
DRAWN MB
CHECKED AH

ENGINEERING CERTIFICATION
LICENSED LANDSCAPE ARCHITECT STEVEN ROBERT SUTHERLAND No. 2805 Exp. 1-31-11 STATE OF CALIFORNIA
PROJECT ENGINEER 5/18/10 DATE

Santa Clara Valley Water District
ACCEPTED BY DISTRICT
Dennis Chung 6/1/10
DATE

PROJECT NAME AND SHEET DESCRIPTION:
LOWER SILVER CREEK REACHES 4, 5 & 6A
IRRIGATION DETAILS

SCALE: AS SHOWN
VERIFY SCALES: 0 1" BAR IS ONE INCH ON ORIGINAL DRAWING. IF NOT ONE INCH ON THIS SHEET, ADJUST SCALES ACCORDINGLY
PROJECT NUMBER: 40264008
SHEET CODE: I-16
PAGE NUMBER: 171 OF 188

DOCUMENT NUMBER: CAD_XX-X-XXXX-XXXXX
4026 - 43/62
USERNAME: Megan Tue 18 May 2010 11:51am
FILENAME: \\powervault\SSA Folder\01-Clients\090018.00-Silver Creek Stream Bank Restoration\090018.00-Drawings\Cbk\(L014-L017) IRRIGATI

PLANTING NOTES

1. REFER TO SHEET L-15, L-16, AND L-17 PAGE 186-188 FOR PLANTING DETAILS.
2. ALL PLANTS SHALL BE SET STRAIGHT, OR PLUMB.
3. PLANTING HOLES FOR CONTAINER GROWN PLANTS SHALL BE 36" MAXIMUM DEEP FOR LARGER STATURE PLANT MATERIAL AND 24" MAXIMUM FOR SMALLER STATURE PLANT MATERIAL. SEE PLANTING SCHEDULE FOR AUGER SIZES FOR INDIVIDUAL PLANTS.
4. CONTAINER PLANTING SHALL ONLY BE PERMITTED BETWEEN AUGUST 1, 2011 AND OCTOBER 1, 2011.
5. CONTRACTOR SHALL BE HELD RESPONSIBLE TO PROTECT AND MAINTAIN ALL PLANT MATERIAL FROM TIME OF DELIVERY TO TIME OF FINAL ACCEPTANCE. DISTRICT IS NOT RESPONSIBLE FOR LOSSES DUE TO VANDALISM OR THEFT.
6. PLANT QUANTITIES, IF SHOWN IN LEGEND, ARE FOR AID IN BIDDING ONLY. CONTRACTOR SHALL VERIFY QUANTITIES.
7. CONTRACTOR SHALL SET OUT LANDSCAPE PLANT MATERIAL WHILE IN THEIR CONTAINERS AS PER PLAN AND RECEIVE APPROVAL FROM THE DISTRICT WITH RESPECT TO PLANT HEALTH PRIOR TO INSTALLATION.
8. CONTRACTOR SHALL PROVIDE (3) 200' LENGTH PLANT LAYOUT MOCKUPS PER REVEGETATION PLANTING ARTICLE 41.14 FOR REVIEW AND APPROVAL BY THE DISTRICT. CONTRACTOR SHALL GIVE MINIMUM 48 WORKING HOURS NOTICE FOR OBSERVATION AND SHALL HAVE ALL PLANT MATERIAL IN SPECIFIED LOCATIONS FOR REVIEW. CONTRACTOR SHALL RE-FLAG ANY PLANT SPECIES LOCATION AS DIRECTED BY DISTRICT STAFF. PRIOR TO EXCAVATION OF PLANTING PITS FOR TREES AND SHRUBS, THE DISTRICT SHALL REVIEW AND APPROVE A TYPICAL 200'-0" LONG REACH OF PLANTING FOR SPECIES LAYOUT PRIOR TO PROCEEDING WITH REMAINING PROJECT.
9. CONTRACTOR SHALL ONLY SET OUT AS MUCH PLANT MATERIAL AS CAN BE COMPLETELY INSTALLED IN ONE DAY. CONTRACTOR SHALL COMPLETE ALL PHASES OF PLANTING FOR EACH PLANT AT THE END OF EACH DAY. NO PLANT SHALL BE LEFT PARTIALLY PLANTED OR WITHOUT WATER OVERNIGHT.
10. CONTRACTOR SHALL GIVE MINIMUM 48 WORKING HOURS NOTICE FOR OBSERVATION AND SHALL HAVE ALL PLANT MATERIAL IN SPECIFIED LOCATIONS FOR REVIEW AT ONE TIME. CONTRACTOR SHALL REPLACE ANY MATERIAL AS DIRECTED BY DISTRICT STAFF. CONTRACTOR SHALL ONLY SET OUT AS MUCH PLANT MATERIAL AS CAN BE COMPLETELY INSTALLED IN ONE DAY.
11. CONTRACTOR SHALL COMPLETE ALL PHASES OF PLANTING FOR EACH PLANT AT THE END OF EACH DAY. NO PLANT SHALL BE LEFT PARTIALLY PLANTED OR WITHOUT WATER OVERNIGHT.
12. PLANT LOCATIONS ARE DIAGRAMMATIC. THE CONTRACTOR TO WORK WITH THE DISTRICT TO ADJUST LOCATIONS PRIOR TO INSTALLATION. CARE SHALL BE TAKEN TO SPOT PLANT MATERIAL RANDOMLY TO PROVIDE OPTIMUM GROWTH CONDITIONS AND MAXIMUM AESTHETICS. PLANT MATERIAL SHALL NOT BE INSTALLED IN AN AREA WHICH WILL CAUSE HARM TO ADJACENT IMPROVEMENTS.
13. PRIOR TO EXCAVATION OF PLANTING PITS FOR TREES AND SHRUBS, THE DISTRICT SHALL REVIEW AND APPROVE A TYPICAL 100'-0" LONG REACH OF PLANTING FOR SPECIES SPACING AND LOCATION PRIOR TO PROCEEDING WITH REMAINING PROJECT.
14. ALL SEEDING RATES ARE EXPRESSED IN POUNDS OF PURE LIVE SEED (PLS) PER ACRE.
15. CONTAINER TYPE SHOWN FOR ONE GALLON SIZE. FOR PURPOSES OF SUBSTITUTION, TWO TUBELING SIZES FOR EACH SPECIES REQUIREMENT, PROVIDED THE RATIO OF TUBELINGS TO CONTAINERS IS NOT LESS THAN 2:1.
16. ENTIRE PROJECT AREA TO RECEIVE HYDROSEED MIX USING THE SPECIFIED NATIVE SPECIES REVEGETATION MIX. IT IS VITAL THAT THIS OCCURS BEFORE THE INSTALLATION OF REVEGETATION BLANKET.
17. REVEGETATION BLANKET SHALL BE PLACED ON THE RECONSTRUCTED SLOPE FROM THE TOP OF THE SLOPE TO THE TOP OF RIP RAP. THE BLANKET SHALL CONSIST OF 100% COCONUT FIBER MATRIX WITH THE NATURAL FIBER NETTING (AMERICAN GREEN C125BN OR EQUIVALENT). THE BLANKET WILL BE INSTALLED AT THE DOWNSTREAM END OF THE PROJECT AREA FIRST AND THEN PROCEED IN AN OVERLAPPING FASHION TOWARDS THE UPSTREAM EXTENT SO THAT FLOWING WATER ALONG THE STREAM BANK DOES NOT UNDERMINE THE FABRIC AT IT'S BASE.
18. CONTRACTOR TO MINIMIZE THE SIZE OF CUTS IN THE EROSION CONTROL BLANKET TO FACILITATE CONSTRUCTION OF PLANTING HOLES AND IRRIGATION BASINS IN THE SECOND PLANTING SEASON. CUTS TO BE MADE VERTICALLY TO THE SLOPE FOR PLANTS AND HORIZONTALLY ALONG LATERAL LINES FOR IRRIGATION BLANKET TO BE RESTAKED AFTER INSTALLATION HAS OCCURRED TO MINIMIZE OPENINGS FOR WATER INTRUSION AND INTEGRITY OF THE BLANKET.
19. MULCH TO BE LANDSCAPE COMPOST MADE FROM CLEAN GROUND YARD TRIMMINGS (GRASS, LEAVES, LIMBS, AND BRANCHES) FROM CURBSIDE YARD WASTE COLLECTION PROGRAMS. COMPOST TO BE BY Z-BEST PRODUCTS AT (408) 846-1574 OR APPROVED EQUAL. SEE SPECIFICATIONS FOR MORE INFORMATION.

LANDSCAPE CREEK BOULDER NOTES

DESIGN INTENT:

LANDSCAPE BOULDERS SHALL BE PLACED IN CLUSTERS CREATING GROUPS OF THE HALF-TON AND ONE-TON ROCK OUTCROPS IN A NATURAL FORMATION SUCH THAT SMALLER ROCKS NESTLE AROUND LARGER ROCKS TO APPEAR THAT NATURE HAS WEATHERED THE ROCKS INTO THEIR POSITION OVER TIME. IT IS ACCEPTABLE TO LEAVE VOIDS BETWEEN THE BOULDERS CLOSE TO THE BANK IN ORDER TO PLANT BETWEEN THEM AND LEAVE AMPLE SPACE BETWEEN THE BANK BOULDER AND ANY BOULDERS CLOSER TOWARD THE CENTER OF THE CREEK TO ENCOURAGE WATER FLOW AROUND THEM, AS SHOWN ON THE DRAWINGS. THE DESIGN INTENT FOR THE PLANTING AROUND THE BOULDERS IS THAT THE PLANTS APPEAR TO HAVE NATURALIZED BETWEEN AND AROUND THE LANDSCAPE BOULDERS ALONG THE EDGE OF THE CHANNEL BED. BELOW ARE PLACEMENT GUIDELINES TO FOLLOW:

1. LOCATE THREE TO FIVE BOULDERS IN A TRIANGULAR CONFIGURATION IN STAGGERED GROUPS OR CLUSTERS ALONG A VERY SHALLOW RUN. CLUSTERS TO BE INTEGRATED INTO THE 1/4-TON RIP RAP SCOUR PROTECTION BANK TO BE LOCATED OFF THE BANK NEAR THE CENTER OF THE CREEK. USE THE PLANS AS A GUIDELINE FOR LOCATION.
2. WHERE BOULDERS ARE LOCATED ADJACENT TO 1/4-TON RIP RAP ROCKS, NESTLE LARGER LANDSCAPE BOULDERS INTO BANK AND ADD ADDITIONAL SMALLER ROCKS AROUND THE LARGER ROCK TO TRANSITION SMOOTHLY FROM THE BANK TO THE LANDSCAPE BOULDER CLUSTERS.
3. ALLOW SEPARATION BETWEEN 'BANK' BOULDERS AND 'CREEK' BOULDERS FOR WATER TO FLOW AROUND THE BOULDERS TO HELP FORM EDDIES OR VORTICES IN THE WAKE. SPACE ABOUT 1 DIAMETER OF THE BOULDER BETWEEN ADJACENT BOULDER.
4. BOULDERS SHOULD OCCUPY < 10% OF THE FLOW AREA AT THE BANK-FULL FLOW.
5. AVOID PLACEMENT IN UNSTABLE, SANDY SECTIONS OF THE CREEK.
6. DO NOT PLACE BOULDERS DIRECTLY BEHIND ANOTHER BOULDER UPSTREAM, THIS WILL HAVE MINIMAL BENEFITS FOR CREATING A WAKE. SUCCESSIVE BOULDERS DOWNSTREAM SHALL BE PLACED AT THE PERIPHERY OF THE WAKE OF UPSTREAM BOULDERS.
7. CONTRACTOR TO PROVIDE (1) BOULDER PLACEMENT MOCK-UP IN PLACE AT STATION 136+00 TO 137+00 FOR DISTRICT REVIEW AND APPROVAL PRIOR TO CONTINUING REMAINING BOULDERS.

FIRST SEASON PLANTING

REVEGETATION HYDROSEED MIX – TO BE APPLIED TO LOWER & UPPER RIGHT BANK & LEFT BANK AREAS

PLAN SYMBOL	PLANT GROUP	PLANT SPECIES (BOTANICAL/ COMMON)	* PLS/ACRE (LBS.)	REMARKS
41,913 SF 0.96 ACRES	GRASSES & FORBES	ACHILLEA MILLIFOLIUM / WHITE YARROW	0.5	SEE PLANS FOR LOCATIONS
		BROMUS CARINATUS / CALIFORNIA BROME	10.0	
		ELYMUS GLAUCUS / BLUE WILD RYE	8.0	
		ERIOPHYLLUM CONFERTIFLORUM / CALIFORNIA SUNSHINE	0.25	
89,402 SF 2.05 ACRES		ESCHSCHOLZIA CALIFORNICA / CALIFORNIA POPPY	2.5	ADD 4-6 LBS. OF VULPINA MICROSTACHYS OR 20 LBS. OF REGREEN PER ACRE TO ANY OF THESE REGIONAL MIXES IF EROSION CONTROL IS TO BE ACCOMPLISHED PRIMARILY THROUGH THE GROWTH OF WINTER GERMINATING PLANTS
		HORDEUM BRACHYANTHERUM / MEADOW BARLEY	4.0	
		HORDEUM CALIFORNICUM / CALIFORNIA BARLEY	4.0	
		LOTUS PURSHIANUS / PURSHINGS LOTUS	2.0	
		LOTUS SCOPARIUS / DEER WEED	4.0	
43,944 SF 1.01 ACRES		LUPINUS NANUS / SKY LUPINE	4.0	* PURE LIVE SEED (PLS) = (% OF SEED LOT X % GERMINATION RATE OF SPECIES)/100 DIVIDE RECOMMENDED APPLICATION RATE (LBS.) ABOVE BY %PLS FOR EACH SPECIES TO FIND TOTAL LBS. REQUIRED TO PROVIDE THE APPLICATION RATE SHOWN ABOVE.
		NASSELLA PULCHRA / PURPLE NEEDLEGRASS	6.0	
		SALVIA MELLIFERA / BLACK SAGE	2.5	
		SISYRINCHIUM BELLUM / BLUE EYED GRASS	1.0	
		TOTAL	48.75	

PLANTING AT CREEK BOULDERS PLANTING SCHEDULE

PLANT GROUP	PLANT SYMBOL	PLANT SPECIES (CODE)	PLANT SPECIES (BOTANICAL/ COMMON)	CONTAINER TYPE	APPROX. SPACING	APPROX. # OF PLANTS FOR ENTIRE PROJECT	REMARKS
HERB	⊙	JUN BAL	JUNCUS BALTICUS / BALTIC RUSH	TREEBAND / TB2 – THREE PLANTINGS PER BASIN	3'-4' OC	292	SEE PLAN ENLARGEMENTS FOR LOCATIONS
	⊕	JUN XIP	JUNCUS XIPHOIDES / IRIS-LEAVED RUSH	TREEBAND / TB2 – THREE PLANTINGS PER BASIN	3'-4' OC	279	
LANDSCAPE CREEK BOULDERS			LANDSCAPE CREEK BOULDERS TO BE 1/2 TON – 1 TON BOULDERS, EARTH TONE AND DARK GRAY / BROWN COLOR. SEE EACH SHEET FOR BOULDER/PLANTING ENLARGEMENT FOR MINIMUM REQUIRED BOULDERS AT SPECIFIC LOCATIONS ALONG THE REACHES.				TOTAL QUANTITY 202 TONS

USERNAME: Megan Mon 17 May 2010 06:21pm
FILENAME: \\powervault705n\PowerVault\SSA Folder\01-Clients\090018.00-Silver Creek Stream Bank Restoration\090018.00-Drawings\CDs\(L013-L24) PLANTING
DOCUMENT NUMBER: CAD_XX-X-XXXX-XXXXX
4026 - 43163

REV	DESCRIPTION	DATE	APPR.	REFERENCE INFORMATION AND NOTES

SSA LANDSCAPE ARCHITECTS INCORPORATED

DATE 05-18-10
DESIGN AH
DRAWN BC
CHECKED AH

ENGINEERING CERTIFICATION
LICENSED LANDSCAPE ARCHITECT STEVEN ROBERT SCHERER No. 2805 EXP. 1-31-12 STATE OF CALIFORNIA
5/18/10
PROJECT ENGINEER DATE

Santa Clara Valley Water District
ACCEPTED BY DISTRICT
Dennis Cheung 6/1/10
DATE

PROJECT NAME AND SHEET DESCRIPTION:
LOWER SILVER CREEK REACHES 4, 5 & 6A
PLANTING PLAN NOTES AND LEGENDS

SCALE
VERIFY SCALES 0 1"
BAR IS ONE INCH ON ORIGINAL DRAWING IF NOT ONE INCH ON THIS SHEET, ADJUST SCALES ACCORDINGLY

PROJECT NUMBER 40264008
SHEET CODE: L-1
PAGE NUMBER: 172 OF 188

USERNAME: Megan Mon 17 May 2010 06:21pm
FILENAME: \\powervault\SSA Folder\01-Clients\090018.00-Silver Creek Stream Bank Restoration\090018.00-Drawings\Cds\(L013-L24) PLANTING

SECOND SEASON PLANTING

LOWER RIGHT BANK REVEGETATION PLANTING SCHEDULE (DISTRICT SUPPLIED / CONTRACTOR INSTALLED)

PLAN SYMBOL	PLANT GROUP / AUGER DEPTH	PLANT SYMBOL	# OF SPECIES PER GROUP TO BE USED PER 100'-0"	PLANT SPECIES (CODE)	PLANT SPECIES (BOTANICAL/ COMMON)	CONTAINER TYPE	APPROX. SPACING	# OF PLANTS PER EVERY 100'-0"	APPROX. # OF PLANTS FOR ENTIRE PROJECT	REMARKS
41,913 SF .96 ACRES	TREE / 3'-0" AUGER		* RANDOM MIX	PLA RAC	PLATANUS RACEMOSA / CALIFORNIA SYCAMORE	TREEPOT / TP4	16'-25' OC	2 TOTAL	132	SEE PLANS FOR LOCATIONS
				POP FRE	POPULUS FREMONTII / FREMONT COTTONWOOD	4-GAL TP	16'-25' OC			
	SHRUB / 2'-0" AUGER		* SELECT 2 SPECIES	SAL EXI	SALIX EXIGUA / SANDBAR WILLOW	4-GAL TP - THREE PLANTINGS PER BASIN	8'-12' OC	4 TOTAL	320	SEE EXAMPLE REVEGETATION ENLARGEMENT - SHEET L-3
				SAL LAE	SALIX LAEVIGATA / RED WILLOW	4-GAL TP - THREE PLANTINGS PER BASIN	10'-12' OC			
				SAL LAS	SALIX LASIOLEPIS / ARROYO WILLOW	4-GAL TP - THREE PLANTINGS PER BASIN	8'-12' OC			
	HERB / 2'-0" AUGER		* SELECT 2 SPECIES	ART DOU	ARTEMISIA DOUGLASIANA / MUGWORT	1-GAL - THREE PLANTINGS PER BASIN	5'-10' OC	6 TOTAL	480	SEE EXAMPLE REVEGETATION ENLARGEMENT - SHEET L-3
				BAC SAL	BACCHARIS SALICIFOLIA / MULE FAT	TREEBAND / TB4 - THREE PLANTINGS PER BASIN	8'-10' OC			
				RUB URS	RUBUS URSINUS / CALIFORNIA BLACKBERRY	1-GAL - THREE PLANTINGS PER BASIN	5'-10' OC			

UPPER RIGHT BANK REVEGETATION PLANTING SCHEDULE (DISTRICT SUPPLIED / CONTRACTOR INSTALLED)

PLAN SYMBOL	PLANT GROUP / AUGER DEPTH	PLANT SYMBOL	# OF SPECIES PER GROUP TO BE USED PER 100'-0"	PLANT SPECIES (CODE)	PLANT SPECIES (BOTANICAL/ COMMON)	CONTAINER TYPE	APPROX. SPACING	# OF PLANTS PER EVERY 100'-0"	APPROX. # OF PLANTS FOR ENTIRE PROJECT	REMARKS
89,402 SF 2.05 ACRES	TREE / 3'-0" AUGER		* RANDOM MIX	ACE NEG	ACER NEGUNDO / BOX ELDER	4-GAL TP	12'-18' OC	3 TOTAL	151	SEE PLANS FOR LOCATIONS
				AES CAL	AESCULUS CALIFORNIA / CALIFORNICA BUCKEYE	4-GAL TP	12'-18' OC			
	SHRUB 1 / 3'-0" AUGER		* SELECT 1 SPECIES	SAM MEX	SAMBUCUS MEXICANA / MEXICAN ELDERBERRY	5-GAL	10'-12' OC	3 TOTAL	168	SEE EXAMPLE REVEGETATION ENLARGEMENT - SHEET L-3
				PRU ILI	PRUNUS ILICIFOLIA / HOLLY-LEAF CHERRY	TREEPOT / TP4	10'-12' OC			
	SHRUB 2 / 3'-0" AUGER		* SELECT 2 SPECIES	RHA CAL	RHAMNUS CALIFORNICA / COFFEEBERRY	5-GAL	6'-10' OC	7 TOTAL	392	SEE EXAMPLE REVEGETATION ENLARGEMENT - SHEET L-3
				ROS CAL	ROSA CALIFORNICA / CALIFORNIA ROSE	5-GAL	6'-10' OC			
				SYM ALB	SYMPHORICARPOS ALBUS / COMMON SNOWBERRY	5-GAL	6'-10' OC			
	HERB 1 / 2'-0" AUGER		* SELECT 2 SPECIES	BAC DOU	BACCHARIS DOUGLASII / MARSH BACCHARIS	DEEPOT / D16 - THREE PLANTINGS PER BASIN	5'-10' OC	6 TOTAL	336	SEE EXAMPLE REVEGETATION ENLARGEMENT - SHEET L-3
				ART CAL	ARTEMISIA CALIFORNICA / CALIFORNIA SAGEBRUSH	TREEBAND / TB2 - THREE PLANTINGS PER BASIN	5'-10' OC			
				RUB URS	RUBUS URSINUS / CALIFORNIA BLACKBERRY	TREEBAND / TB4 - THREE PLANTINGS PER BASIN	5'-10' OC			
	HERB 2 / 2'-0" AUGER		* SELECT 2 SPECIES	AST CHI	ASTER CHILENSIS / WESTERN ASTER	1-GAL	4'-6' OC	9 TOTAL	504	SEE EXAMPLE REVEGETATION ENLARGEMENT - SHEET L-3
				EUT OCC	EUTHAMIA OCCIDENTALIS / WESTERN GOLDENROD	1-GAL	4'-6' OC			
				LEY TRI	LEYMUS TRITICOIDES / CREEPING WILD RYE	1-GAL TO BE DIVIDED INTO 4 BY CONTRACTOR	4'-6' OC			

* IT IS EXPECTED AND PREFERRED THAT ALL SPECIES IN THE TREE, SHRUB, AND HERB GROUPS BE PLANTED WITHIN THE PROJECT. THE CONTRACTOR SHALL PROVIDE A BLEND OF PLANT SPECIES FROM EACH GROUP BASED ON THE PROVIDED MINIMUM SPECIES PER 100'-0" COLUMN IN ORDER TO ACHIEVE A DIVERSE REVEGETATION PLANTING SCHEME AND TO INCORPORATE FLEXIBILITY IN THE PLANTING LAYOUT DUE TO PLANT AVAILABILITY. EACH PLANT SPECIES (WITHIN EACH PLANT GROUP) IS TO BE USED WITHIN 200'-0". TO ACHIEVE THIS, THE CONTRACTOR IS TO VARY THEIR PLANT SELECTION AND COMBINATIONS FROM EACH GROUP. IT IS THE CONTRACTOR'S RESPONSIBILITY TO VERIFY QUANTITIES WITH THE DISTRICT AND ENSURE THEY DO NOT RUN OUT OF ANY ONE SPECIES PART WAY THROUGH PLANTING THE ENTIRE PROJECT AREA.

LEFT BANK LANDSCAPE PLANTING SCHEDULE (CONTRACTOR SUPPLIED / CONTRACTOR INSTALLED)

PLAN SYMBOL	PLANT GROUP/ AUGER SIZE	PLANT SYMBOL	PLANT SPECIES (CODE)	PLANT SPECIES (BOTANICAL/ COMMON)	CONTAINER TYPE	APPROX. SPACING	# OF PLANTS PER EVERY 100'-0"	APPROX. # OF PLANTS FOR ENTIRE PROJECT	REMARKS
43,944 SF 1.01 ACRES	TREE 1 / 2'-0" AUGER		ALN RHO	ALNUS RHOMBIFOLIA / WHITE ALDER	15-GAL	100'-0" OC	1 TOTAL	41	SEE PLANS FOR LOCATIONS
	TREE 2 / 2'-0" AUGER		QUE LOB	QUERCUS LOBATA / VALLEY OAK	TREEPOT / TP4	100'-0" OC	1 TOTAL	34	SEE PLANS FOR LOCATIONS
	VINE / ESPALIER		CLE LAS	CLEMATIS LASIANTHA / PIPESTEM CLEMATIS	1-GAL	10'-0" OC	-	35	SEE PLANS FOR LOCATIONS
			LON HIS	LONICERA HISPIDULA / CALIFORNIA HONEYSUCKLE	1-GAL	10'-0" OC	-	30	
			VIT CAL	VITIS CALIFORNICA / CALIFORNIA WILD GRAPE	1-GAL	20'-0" OC	-	230	
	GRASSES & FORBES		HYDROSEED ALREADY ESTABLISHED IN FIRST SEASON PLANTING - SEE SHEET L-1						

4026-43/64

DOCUMENT NUMBER: CAD_XX-X-XXXX-XXXXX

REV	DESCRIPTION	DATE	APPR.	REFERENCE INFORMATION AND NOTES

SSA LANDSCAPE ARCHITECTS INCORPORATED

DATE 05-18-10
DESIGN AH
DRAWN BC
CHECKED AH

ENGINEERING CERTIFICATION
LICENSED LANDSCAPE ARCHITECT STEVEN ROBERT SUTHERLAND No. 2805 Exp. 1-31-12 STATE OF CALIFORNIA
5/18/10
PROJECT ENGINEER DATE

Santa Clara Valley Water District
ACCEPTED BY DISTRICT
Dennis Cheung 6/1/10
DATE

PROJECT NAME AND SHEET DESCRIPTION:
LOWER SILVER CREEK REACHES 4, 5 & 6A
PLANTING PLAN NOTES AND LEGENDS

SCALE
VERIFY SCALES
0 1"
BAR IS ONE INCH ON ORIGINAL DRAWING IF NOT ONE INCH ON THIS SHEET, ADJUST SCALES ACCORDINGLY

PROJECT NUMBER 40264008
SHEET CODE: L-2
PAGE NUMBER: 173 OF 188

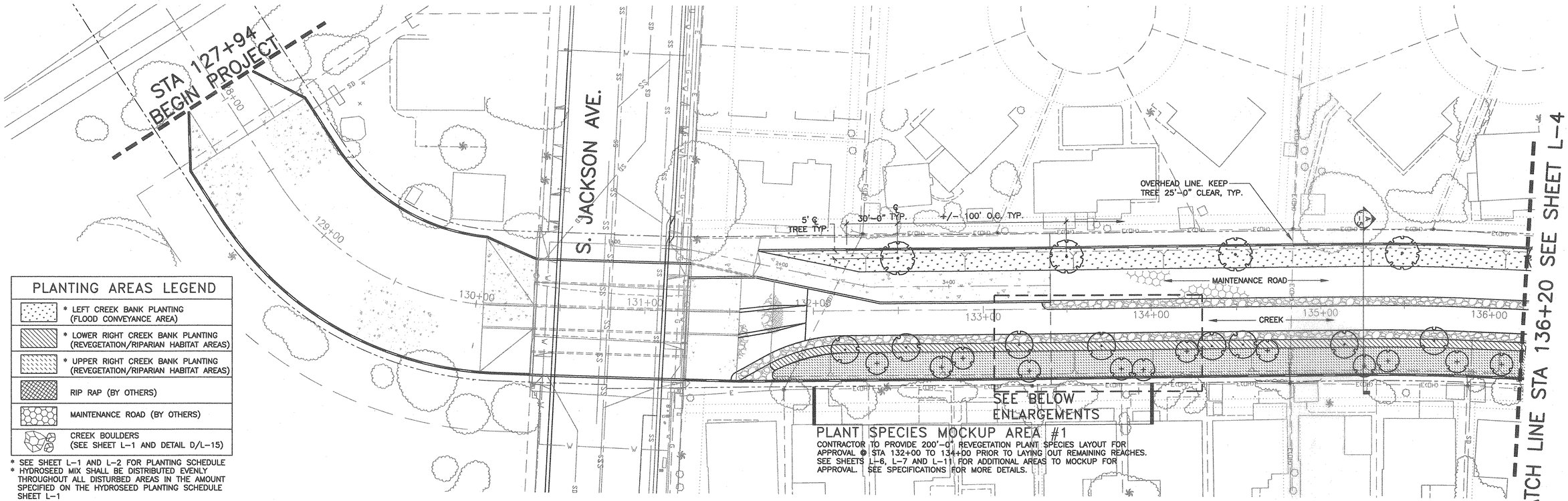

PLANT SPECIES MOCKUP AREA #1

CONTRACTOR TO PROVIDE 200'-0" REVEGETATION PLANT SPECIES LAYOUT FOR APPROVAL @ STA 132+00 TO 134+00 PRIOR TO LAYING OUT REMAINING REACHES. SEE SHEETS L1-6, L-7 AND L-11 FOR ADDITIONAL AREAS TO MOCKUP FOR APPROVAL. SEE SPECIFICATIONS FOR MORE DETAILS.

PLANTING AREAS LEGEND

- * LEFT CREEK BANK PLANTING (FLOOD CONVEYANCE AREA)
- * LOWER RIGHT CREEK BANK PLANTING (REVEGETATION/RIPARIAN HABITAT AREAS)
- * UPPER RIGHT CREEK BANK PLANTING (REVEGETATION/RIPARIAN HABITAT AREAS)
- RIP RAP (BY OTHERS)
- MAINTENANCE ROAD (BY OTHERS)
- CREEK BOULDERS (SEE SHEET L-1 AND DETAIL D/L-15)

* SEE SHEET L-1 AND L-2 FOR PLANTING SCHEDULE
* HYDROSEED MIX SHALL BE DISTRIBUTED EVENLY THROUGHOUT ALL DISTURBED AREAS IN THE AMOUNT SPECIFIED ON THE HYDROSEED PLANTING SCHEDULE SHEET L-1

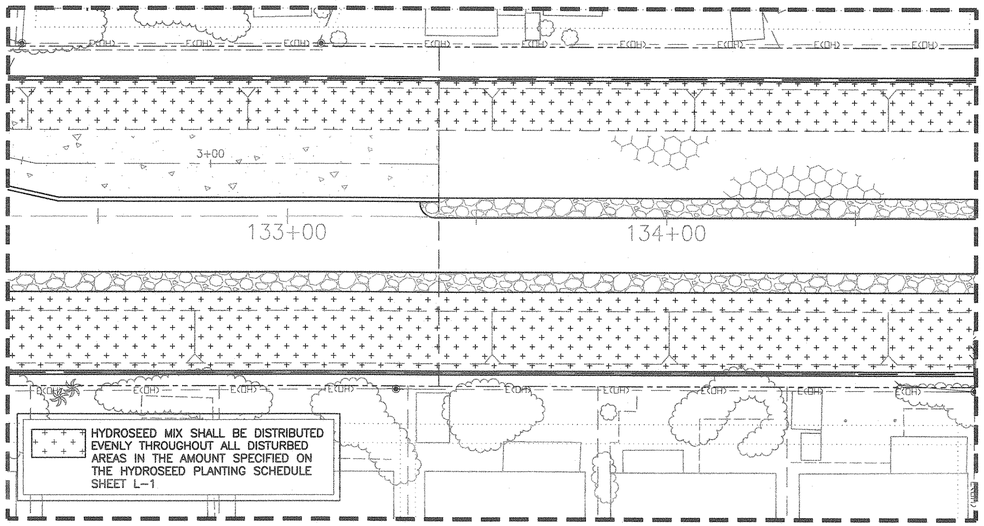

EXAMPLE FIRST PLANTING SEASON (REVEGETATION HYDROSEED) PLANTING

SCALE: 1"=20'-0"

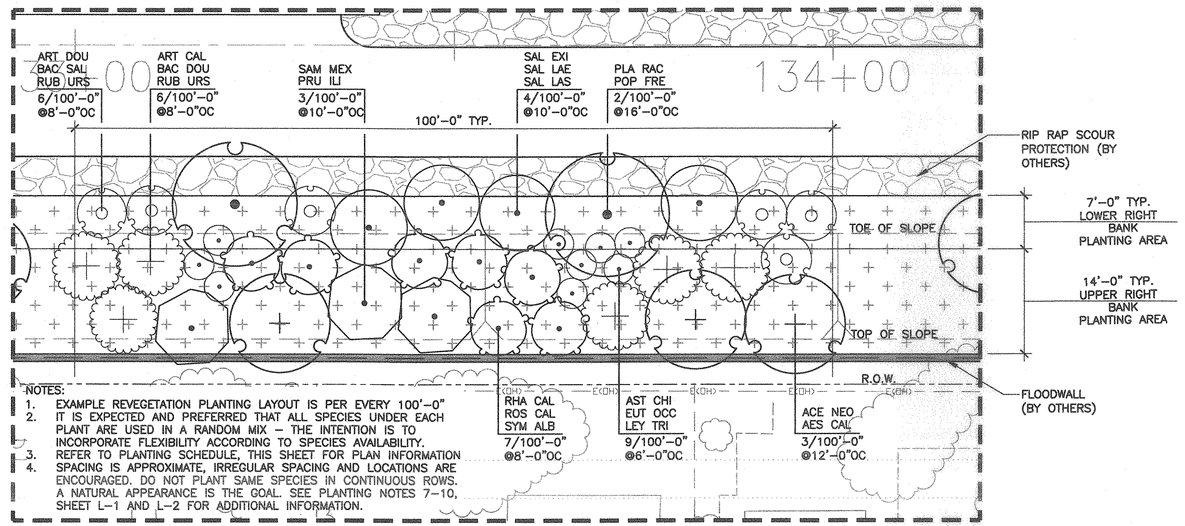

NOTES:
1. EXAMPLE REVEGETATION PLANTING LAYOUT IS PER EVERY 100'-0"
2. IT IS EXPECTED AND PREFERRED THAT ALL SPECIES UNDER EACH PLANT ARE USED IN A RANDOM MIX – THE INTENTION IS TO INCORPORATE FLEXIBILITY ACCORDING TO SPECIES AVAILABILITY.
3. REFER TO PLANTING SCHEDULE, THIS SHEET FOR PLAN INFORMATION
4. SPACING IS APPROXIMATE, IRREGULAR SPACING AND LOCATIONS ARE ENCOURAGED. DO NOT PLANT SAME SPECIES IN CONTINUOUS ROWS. A NATURAL APPEARANCE IS THE GOAL. SEE PLANTING NOTES 7-10, SHEET L-1 AND L-2 FOR ADDITIONAL INFORMATION.

EXAMPLE SECOND PLANTING SEASON @ RIGHT BANK REVEGETATION PLANTING

SCALE: 1"=10'-0"

REV	DESCRIPTION	DATE	APPR.	REFERENCE INFORMATION AND NOTES

SSA LANDSCAPE ARCHITECTS INCORPORATED

DATE 05-18-10
DESIGN AH
DRAWN BC
CHECKED AH

ENGINEERING CERTIFICATION
LICENSED LANDSCAPE ARCHITECT STEVEN ROBERT SUTHERLAND No. 2805 Exp. 1-31-12 STATE OF CALIFORNIA
5/18/10
PROJECT ENGINEER DATE

Santa Clara Valley Water District

ACCEPTED BY DISTRICT
Dennis Cheong 6/1/10
DATE

PROJECT NAME AND SHEET DESCRIPTION:

LOWER SILVER CREEK REACHES 4, 5 & 6A

PLANTING PLAN STA 127+94 TO STA 136+20

SCALE 1"=30'

VERIFY SCALES 0 1"
BAR IS ONE INCH ON ORIGINAL DRAWING IF NOT ONE INCH ON THIS SHEET, ADJUST SCALES ACCORDINGLY

PROJECT NUMBER 40264008

SHEET CODE: L-3

PAGE NUMBER: 174 OF 188

DOCUMENT NUMBER: CAD_XX-X-XXXX-XXXXX 4026-43/65

USERNAME: Megan Mon 17 May 2010 06:22pm
FILENAME: \\powervault705n\PowerVault\SSA Folder\01-Clients\090018.00-Silver Creek Stream Bank Restoration\090018.00-Drawings\CDA\(L013-L24) PLANTING

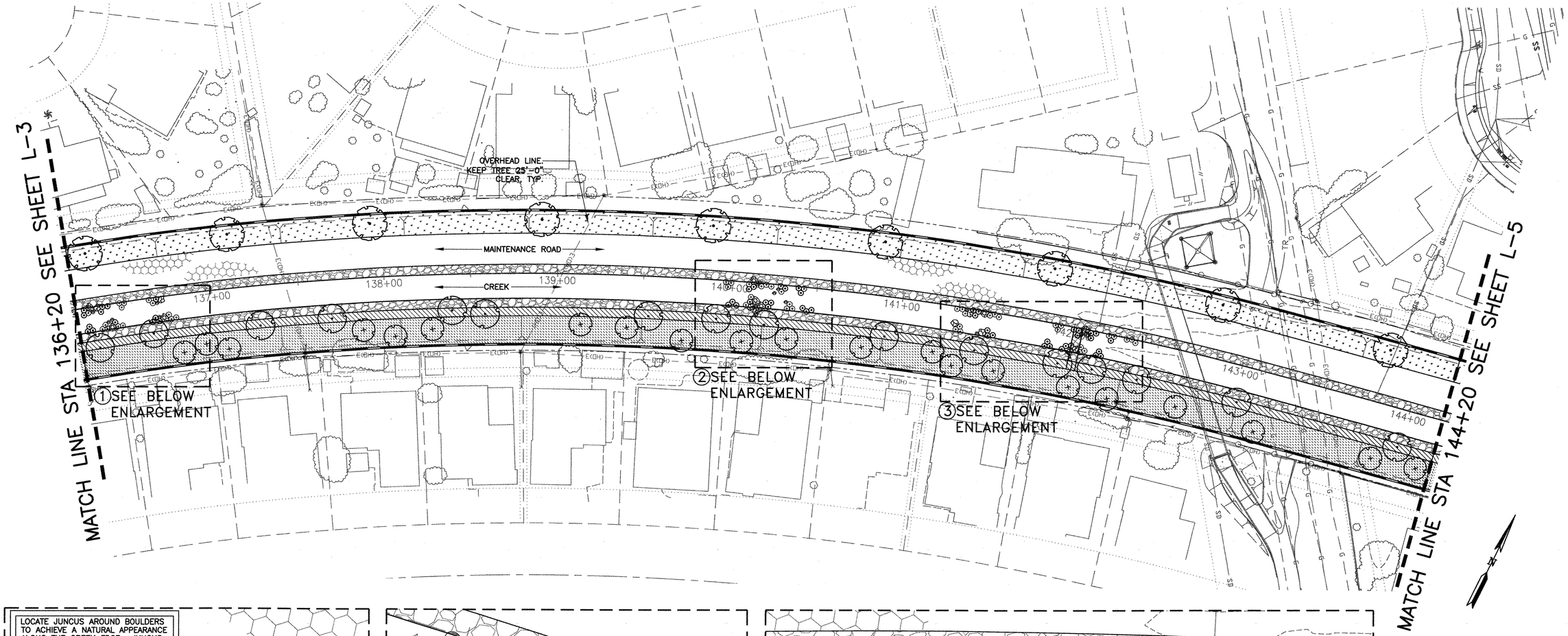

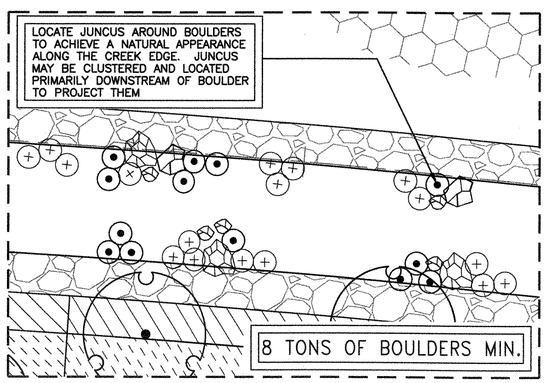

① BOULDER PLANTING ENLARGEMENT
SCALE: 1"=10'-0"

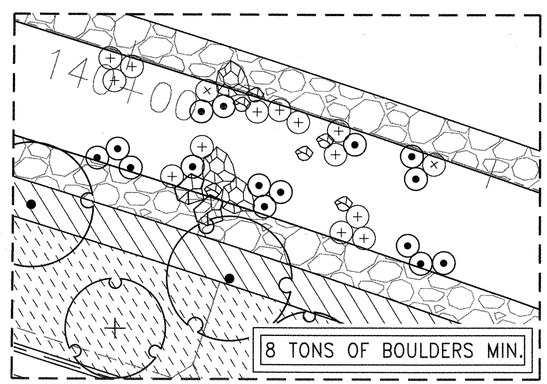

② BOULDER PLANTING ENLARGEMENT
SCALE: 1"=10'-0"

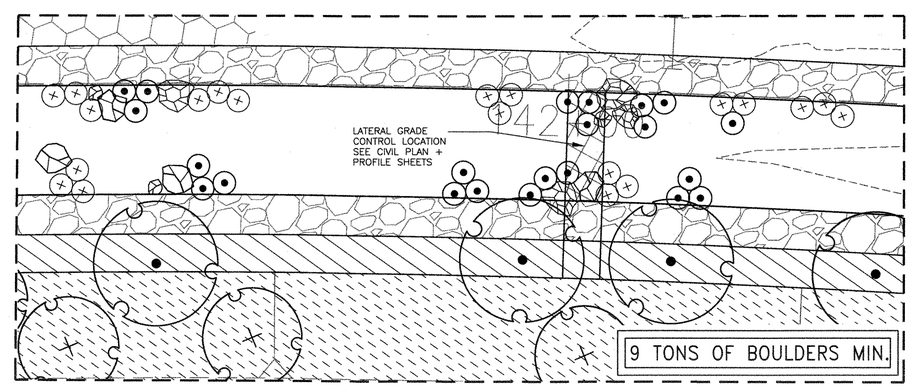

③ BOULDER PLANTING ENLARGEMENT
SCALE: 1"=10'-0"

PLANTING AREAS LEGEND

- * LEFT CREEK BANK PLANTING (FLOOD CONVEYANCE AREA)
- * LOWER RIGHT CREEK BANK PLANTING (REVEGETATION/RIPARIAN HABITAT AREAS)
- * UPPER RIGHT CREEK BANK PLANTING (REVEGETATION/RIPARIAN HABITAT AREAS)
- RIP RAP (BY OTHERS)
- MAINTENANCE ROAD (BY OTHERS)
- CREEK BOULDERS (SEE SHEET L-1 AND DETAIL D/L-15)

* SEE SHEET L-1 AND L-2 FOR PLANTING SCHEDULE
* HYDROSEED MIX SHALL BE DISTRIBUTED EVENLY THROUGHOUT ALL DISTURBED AREAS IN THE AMOUNT SPECIFIED ON THE HYDROSEED PLANTING SCHEDULE SHEET L-1

REV	DESCRIPTION	DATE	APPR.	REFERENCE INFORMATION AND NOTES

SSA LANDSCAPE ARCHITECTS INCORPORATED

DATE 05-18-10
DESIGN AH
DRAWN BC
CHECKED AH

ENGINEERING CERTIFICATION
LICENSED LANDSCAPE ARCHITECT STEVEN ROBERT SUTHERLAND No. 2805 Exp. 1-31-12 STATE OF CALIFORNIA
5/18/10
PROJECT ENGINEER DATE

Santa Clara Valley Water District
ACCEPTED BY DISTRICT
Dennis Cheung 6/1/10
DATE

PROJECT NAME AND SHEET DESCRIPTION:
LOWER SILVER CREEK REACHES 4, 5 & 6A
PLANTING PLAN STA 136+20 TO 144+20

SCALE 1"=30'
VERIFY SCALES 0 1"
BAR IS ONE INCH ON ORIGINAL DRAWING IF NOT ONE INCH ON THIS SHEET, ADJUST SCALES ACCORDINGLY

PROJECT NUMBER 40264008
SHEET CODE: L-4
PAGE NUMBER: 175 OF 188

DOCUMENT NUMBER: CAD_XX-X-XXXX-XXXXX
Y026-43/66

USERNAME: Megan Mon 17 May 2010 06:22pm
FILENAME: \\powervault705n\PowerVault\SSA Folder\01-Clients\090018.00-Silver Creek Stream Bank Restoration\090018.00-Drawings\CDs\(.013-L24) PLANTING

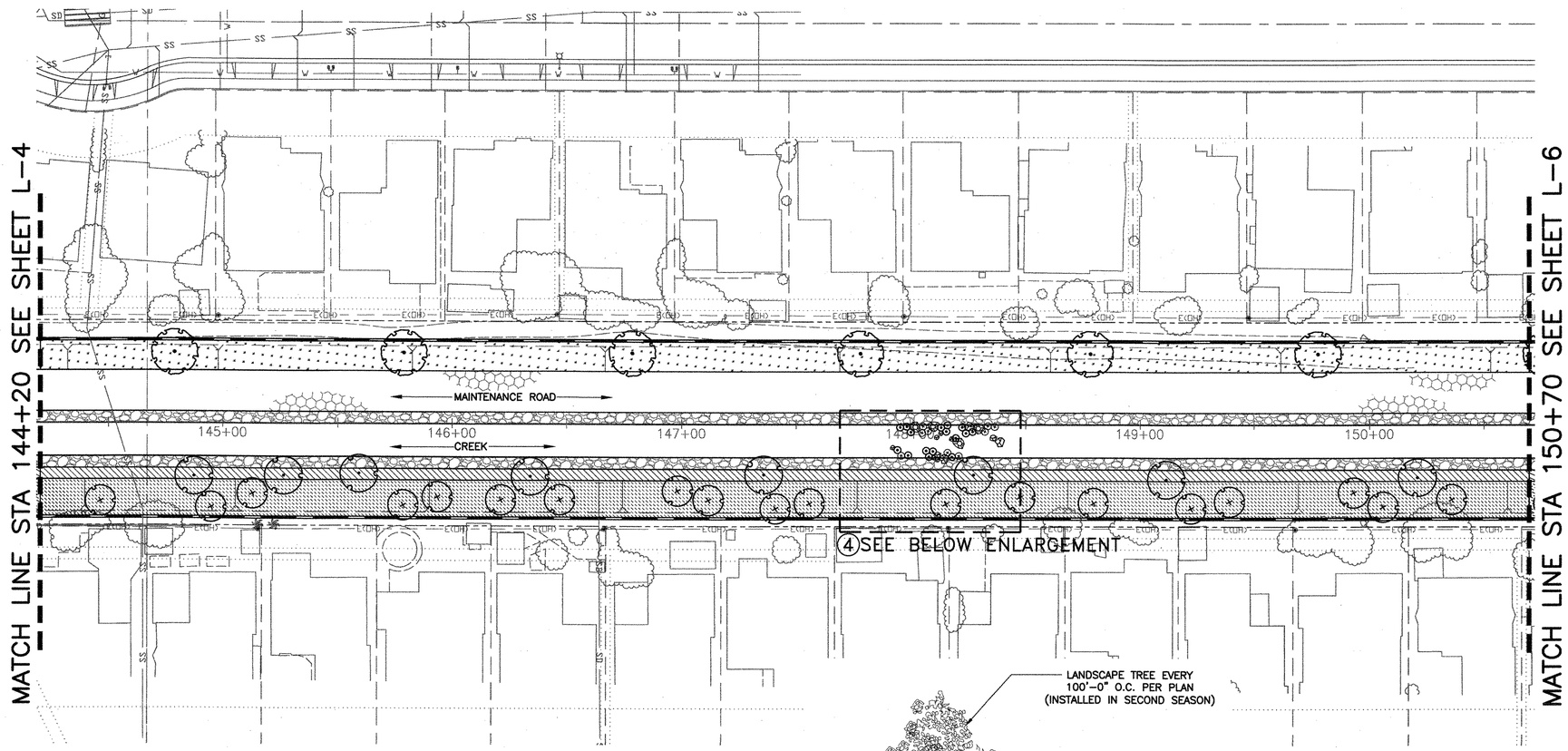

PLANTING AREAS LEGEND

- * LEFT CREEK BANK PLANTING (FLOOD CONVEYANCE AREA)
- * LOWER RIGHT CREEK BANK PLANTING (REVEGETATION/RIPARIAN HABITAT AREAS)
- * UPPER RIGHT CREEK BANK PLANTING (REVEGETATION/RIPARIAN HABITAT AREAS)
- RIP RAP (BY OTHERS)
- MAINTENANCE ROAD (BY OTHERS)
- CREEK BOULDERS (SEE SHEET L-1 AND DETAIL D/L-15)

* SEE SHEET L-1 AND L-2 FOR PLANTING SCHEDULE
* HYDROSEED MIX SHALL BE DISTRIBUTED EVENLY THROUGHOUT ALL DISTURBED AREAS IN THE AMOUNT SPECIFIED ON THE HYDROSEED PLANTING SCHEDULE SHEET L-1

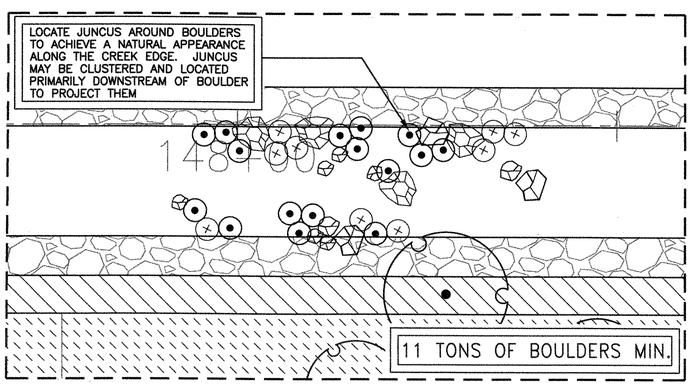

④ BOULDER PLANTING ENLARGEMENT
SCALE: 1"=10'-0"

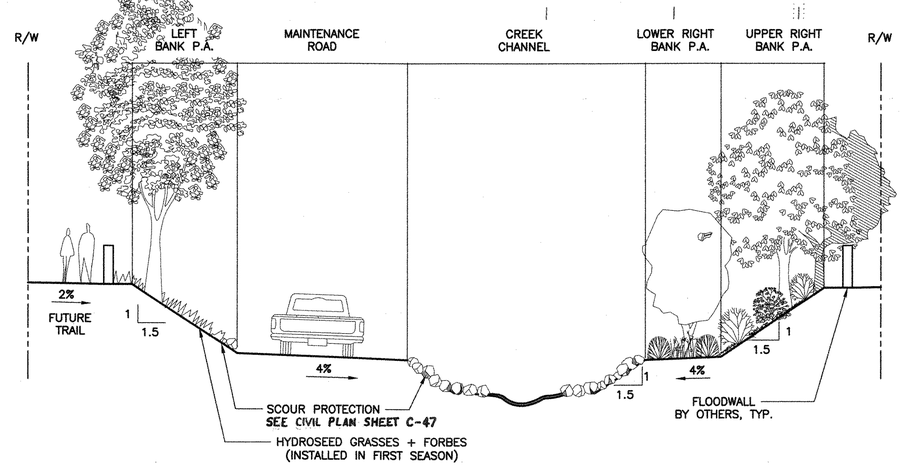

Ⓐ REVEGETATED CREEK STA 135+50
SCALE: 1/8" = 1'-0"

REV	DESCRIPTION	DATE	APPR.	REFERENCE INFORMATION AND NOTES

SSA LANDSCAPE ARCHITECTS INCORPORATED

DATE 05-18-10
DESIGN AH
DRAWN BC
CHECKED AH

ENGINEERING CERTIFICATION
LICENSED LANDSCAPE ARCHITECT STEVEN ROBERT SUTHERLAND No. 2805 Exp. 1-31-11 STATE OF CALIFORNIA
PROJECT ENGINEER 5/18/10 DATE

Santa Clara Valley Water District
ACCEPTED BY DISTRICT
Dennis Cheong 6/1/10
DATE

PROJECT NAME AND SHEET DESCRIPTION:
LOWER SILVER CREEK REACHES 4, 5 & 6A
PLANTING PLAN STA 144+20 TO STA 150+70

SCALE 1"=30'
VERIFY SCALES 0 1"
BAR IS ONE INCH ON ORIGINAL DRAWING. IF NOT ONE INCH ON THIS SHEET, ADJUST SCALES ACCORDINGLY

PROJECT NUMBER 40264008
SHEET CODE: L-5
PAGE NUMBER: 176 OF 188

DOCUMENT NUMBER: CAD_XX-X-XXXX-XXXXX 4026-43/67

USERNAME: Megan Mon 17 May 2010 06:22pm
FILENAME: \\powervault\Powervault\SSA Folder\01-Clients\090018.00-Silver Creek Stream Bank Restoration\090018.00-Drawings\CDs\(L01-L24) PLANTING

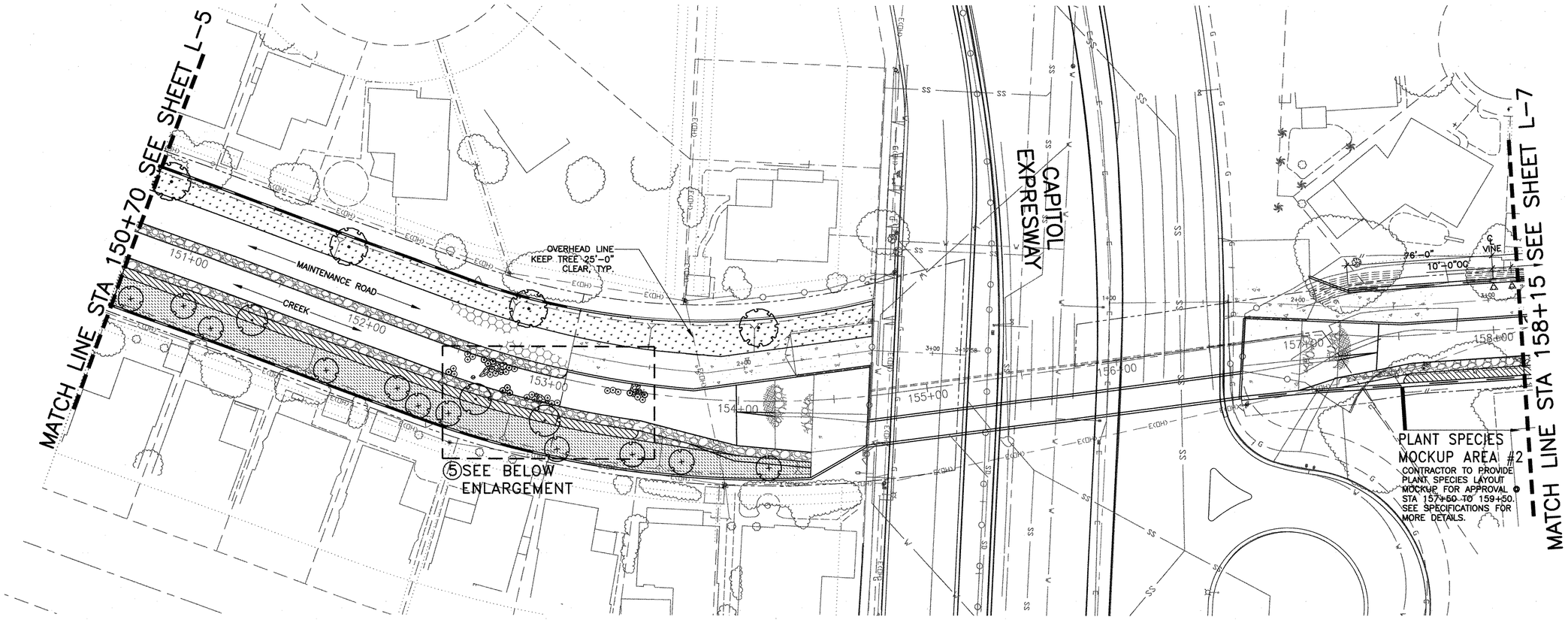

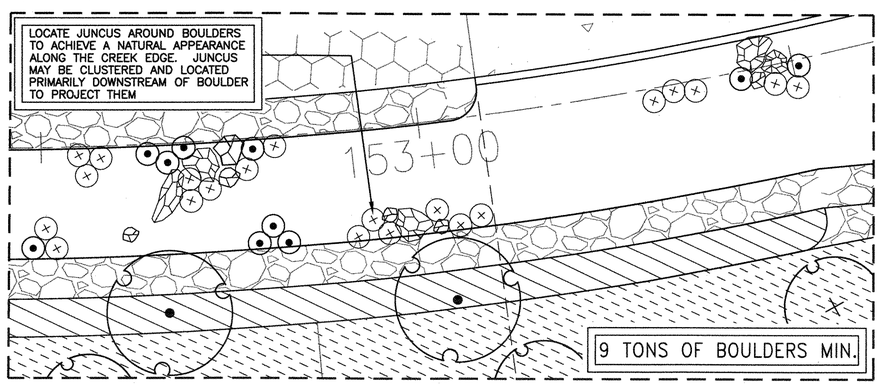

⑤ BOULDER PLANTING ENLARGEMENT
SCALE: 1"=10'-0"

PLANTING AREAS LEGEND

	* LEFT CREEK BANK PLANTING (FLOOD CONVEYANCE AREA)
	* LOWER RIGHT CREEK BANK PLANTING (REVEGETATION/RIPARIAN HABITAT AREAS)
	* UPPER RIGHT CREEK BANK PLANTING (REVEGETATION/RIPARIAN HABITAT AREAS)
	RIP RAP (BY OTHERS)
	MAINTENANCE ROAD (BY OTHERS)
	CREEK BOULDERS (SEE SHEET L-1 AND DETAIL D/L-15)

* SEE SHEET L-1 AND L-2 FOR PLANTING SCHEDULE
* HYDROSEED MIX SHALL BE DISTRIBUTED EVENLY THROUGHOUT ALL DISTURBED AREAS IN THE AMOUNT SPECIFIED ON THE HYDROSEED PLANTING SCHEDULE SHEET L-1

REV	DESCRIPTION	DATE	APPR.	REFERENCE INFORMATION AND NOTES

SSA LANDSCAPE ARCHITECTS INCORPORATED

DATE 05-18-10
DESIGN AH
DRAWN BC
CHECKED AH

ENGINEERING CERTIFICATION
LICENSED LANDSCAPE ARCHITECT STEVEN ROBERT SUTHERLAND No. 2805 Exp. 1-31-12 STATE OF CALIFORNIA
PROJECT ENGINEER 5/18/10 DATE

Santa Clara Valley Water District
ACCEPTED BY DISTRICT
Dennis Cheong 6/1/10
DATE

PROJECT NAME AND SHEET DESCRIPTION:
LOWER SILVER CREEK REACHES 4, 5 & 6A
PLANTING PLAN STA 150+70 TO STA 158+15

SCALE 1"=30'
VERIFY SCALES 0 1"
BAR IS ONE INCH ON ORIGINAL DRAWING IF NOT ONE INCH ON THIS SHEET, ADJUST SCALES ACCORDINGLY

PROJECT NUMBER 40264008
SHEET CODE: L-6
PAGE NUMBER: 177 OF 188

DOCUMENT NUMBER: CAD_XX-X-XXXX-XXXXX
4026-43168

USERNAME: Megan Mon 17 May 2010 06:23pm
FILENAME: \\powervault705n\PowerVault\SSA Folder\01-Clients\090018.00-Silver Creek Stream Bank Restoration\090018.00-Drawings\CDs\(L013-L24) PLANTING

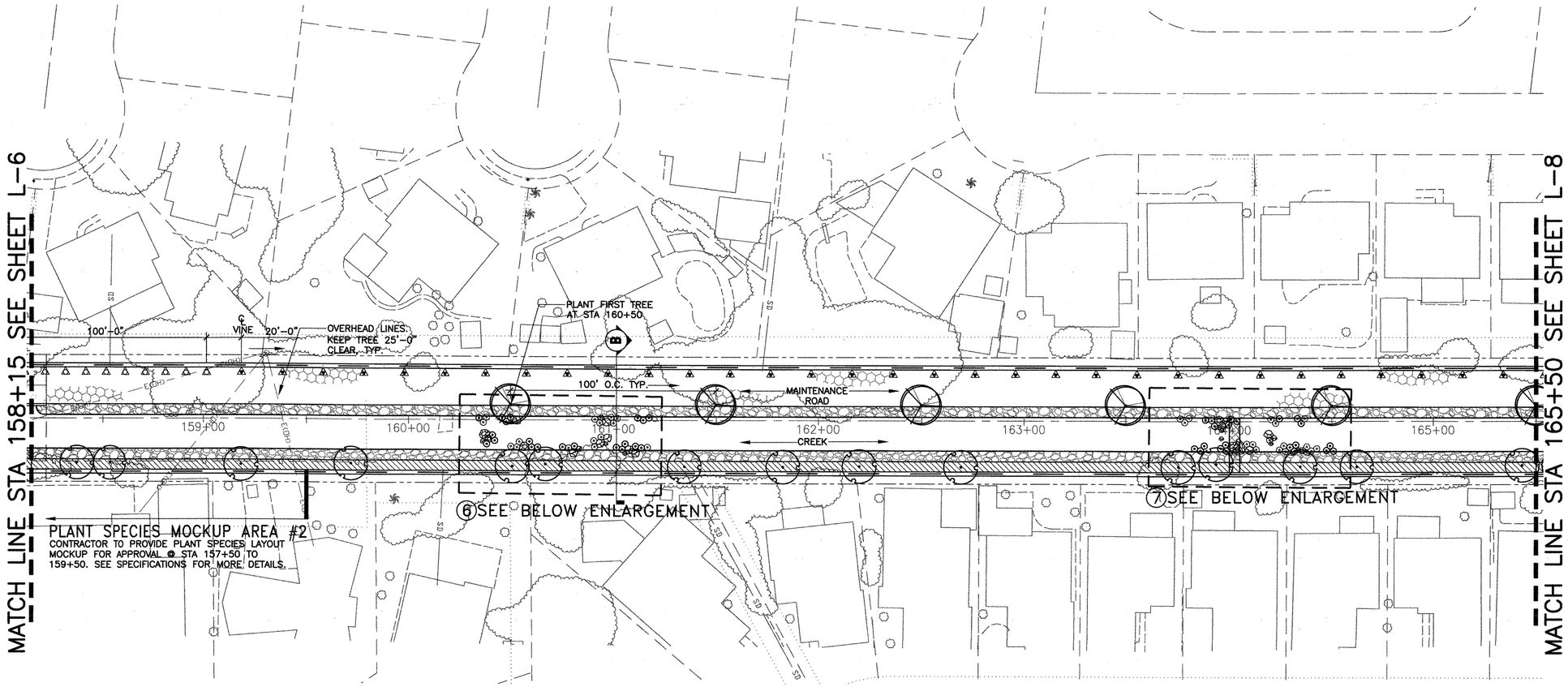

PLANTING AREAS LEGEND

- * LEFT CREEK BANK PLANTING (FLOOD CONVEYANCE AREA)
- * LOWER RIGHT CREEK BANK PLANTING (REVEGETATION/RIPARIAN HABITAT AREAS)
- * UPPER RIGHT CREEK BANK PLANTING (REVEGETATION/RIPARIAN HABITAT AREAS)
- RIP RAP (BY OTHERS)
- MAINTENANCE ROAD (BY OTHERS)
- CREEK BOULDERS (SEE SHEET L-1 AND DETAIL D/L-15)

* SEE SHEET L-1 AND L-2 FOR PLANTING SCHEDULE
* HYDROSEED MIX SHALL BE DISTRIBUTED EVENLY THROUGHOUT ALL DISTURBED AREAS IN THE AMOUNT SPECIFIED ON THE HYDROSEED PLANTING SCHEDULE SHEET L-1

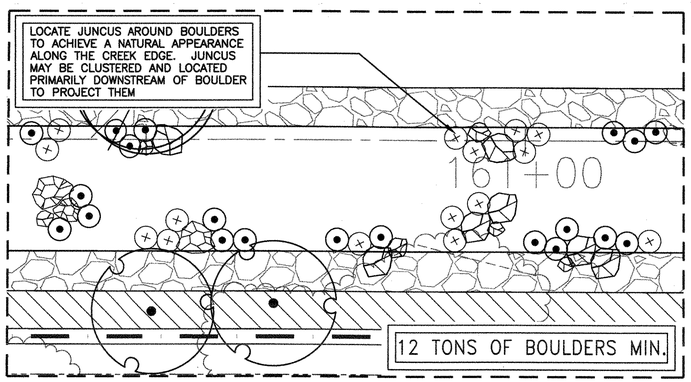

⑥ BOULDER PLANTING ENLARGEMENT
SCALE: 1"=10'-0"

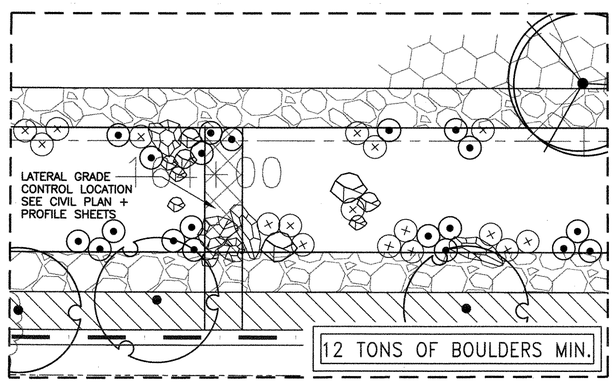

⑦ BOULDER PLANTING ENLARGEMENT
SCALE: 1"=10'-0"

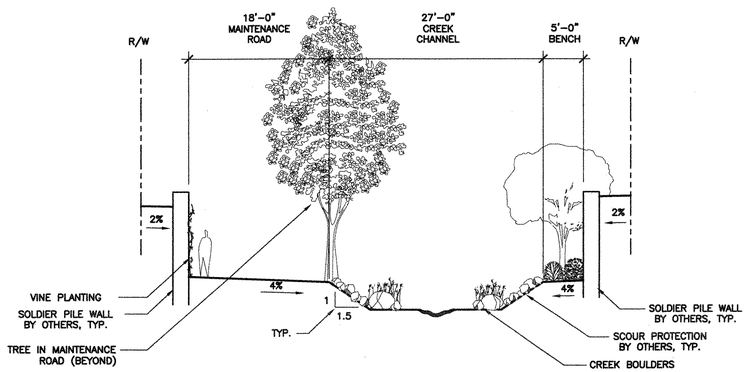

Ⓑ REVEGETATED CREEK STA 161+00
SCALE: 1/8" = 1'-0"
DETAIL-FILE

REV	DESCRIPTION	DATE	APPR.	REFERENCE INFORMATION AND NOTES

SSA LANDSCAPE ARCHITECTS INCORPORATED

DATE 05-18-10
DESIGN AH
DRAWN BC
CHECKED AH

ENGINEERING CERTIFICATION
LICENSED LANDSCAPE ARCHITECT STEVEN ROBERT SUTHERLAND No. 2805 Exp. 1-31-12 STATE OF CALIFORNIA
PROJECT ENGINEER 5/18/10 DATE

Santa Clara Valley Water District
ACCEPTED BY DISTRICT
Dennis Chang 6/1/10
DATE

PROJECT NAME AND SHEET DESCRIPTION:
LOWER SILVER CREEK REACHES 4, 5 & 6A
PLANTING PLAN STA 158+15 TO STA 165+50

SCALE 1"=30'
VERIFY SCALES 0 1" BAR IS ONE INCH ON ORIGINAL DRAWING IF NOT ONE INCH ON THIS SHEET, ADJUST SCALES ACCORDINGLY

PROJECT NUMBER 40264008
SHEET CODE: L-7
PAGE NUMBER: 178 OF 188

DOCUMENT NUMBER: CAD_XX-X-XXXX-XXXXX
USERNAME: Megan Mon 17 May 2010 06:23pm
FILENAME: \\powervault\SSA Folder\01-Clients\090018.00-Silver Creek Stream Bank Restoration\090018.00-Drawings\CDs\(L013-L24) PLANTING
4026-43/69

USERNAME: Briana Tue 18 May 2010 11:15am
FILENAME: \\Powervault705n\PowerVault\SSA Folder\01-Clients\090018.00-Silver Creek Stream Bank Restoration\090018.00-Drawings\Cbs\(L013-L24) PLANTING

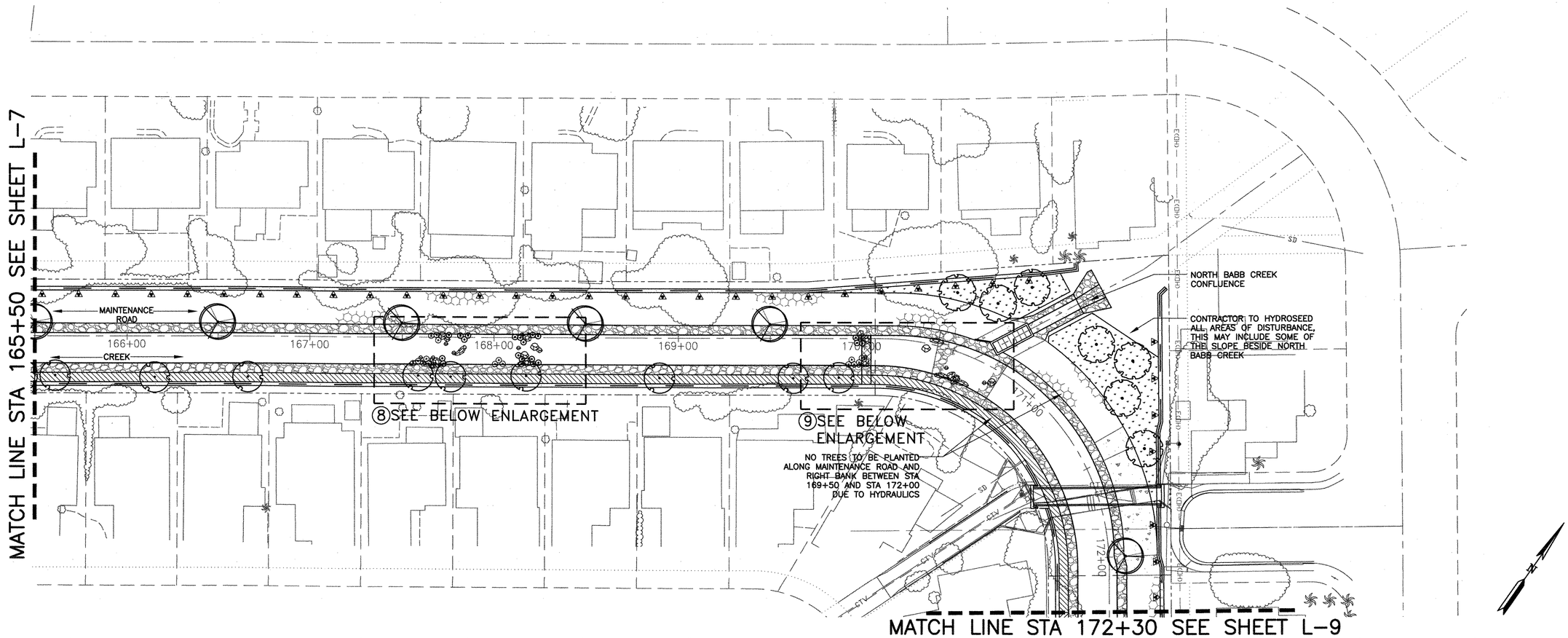

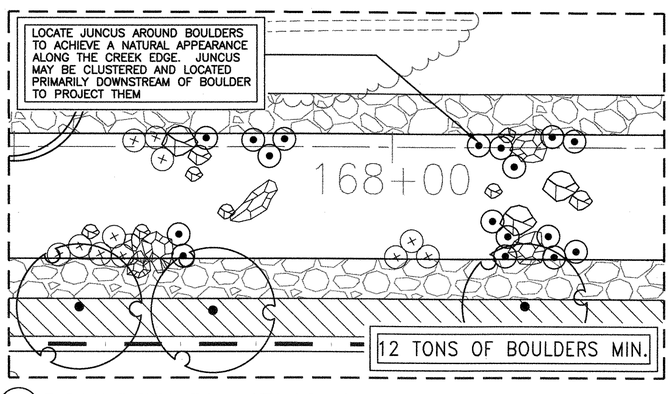

⑧ BOULDER PLANTING ENLARGEMENT
SCALE: 1"–10'–0"

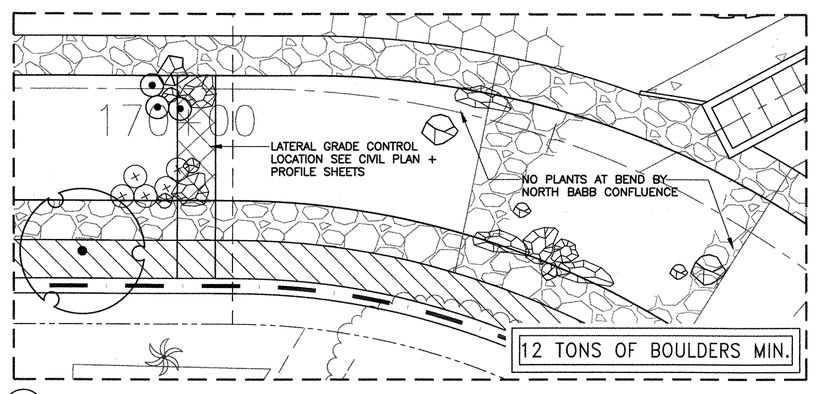

⑨ BOULDER PLANTING ENLARGEMENT
SCALE: 1"–10'–0"

PLANTING AREAS LEGEND

- * LEFT CREEK BANK PLANTING (FLOOD CONVEYANCE AREA)
- * LOWER RIGHT CREEK BANK PLANTING (REVEGETATION/RIPARIAN HABITAT AREAS)
- * UPPER RIGHT CREEK BANK PLANTING (REVEGETATION/RIPARIAN HABITAT AREAS)
- RIP RAP (BY OTHERS)
- MAINTENANCE ROAD (BY OTHERS)
- CREEK BOULDERS (SEE SHEET L-1 AND DETAIL D/L-15)

* SEE SHEET L-1 AND L-2 FOR PLANTING SCHEDULE
* HYDROSEED MIX SHALL BE DISTRIBUTED EVENLY THROUGHOUT ALL DISTURBED AREAS IN THE AMOUNT SPECIFIED ON THE HYDROSEED PLANTING SCHEDULE SHEET L-1

REV	DESCRIPTION	DATE	APPR.	REFERENCE INFORMATION AND NOTES

SSA LANDSCAPE ARCHITECTS INCORPORATED

DATE 05-18-10
DESIGN AH
DRAWN BC
CHECKED AH

ENGINEERING CERTIFICATION
LICENSED LANDSCAPE ARCHITECT STEVEN ROBERT SUTHERLAND No. 2805 Exp. 1-31-12 STATE OF CALIFORNIA
5/18/10
PROJECT ENGINEER DATE

Santa Clara Valley Water District
ACCEPTED BY DISTRICT
Dennis Chang 6/1/10
DATE

PROJECT NAME AND SHEET DESCRIPTION:
LOWER SILVER CREEK REACHES 4, 5 & 6A
PLANTING PLAN STA 165+50 TO STA 172+30

SCALE 1"=30'
VERIFY SCALES 0 1" BAR IS ONE INCH ON ORIGINAL DRAWING IF NOT ONE INCH ON THIS SHEET, ADJUST SCALES ACCORDINGLY

PROJECT NUMBER 40264008
SHEET CODE: L-8
PAGE NUMBER: 179 OF 188

DOCUMENT NUMBER: CAD_XX-X-XXXX-XXXXX
4026-93170

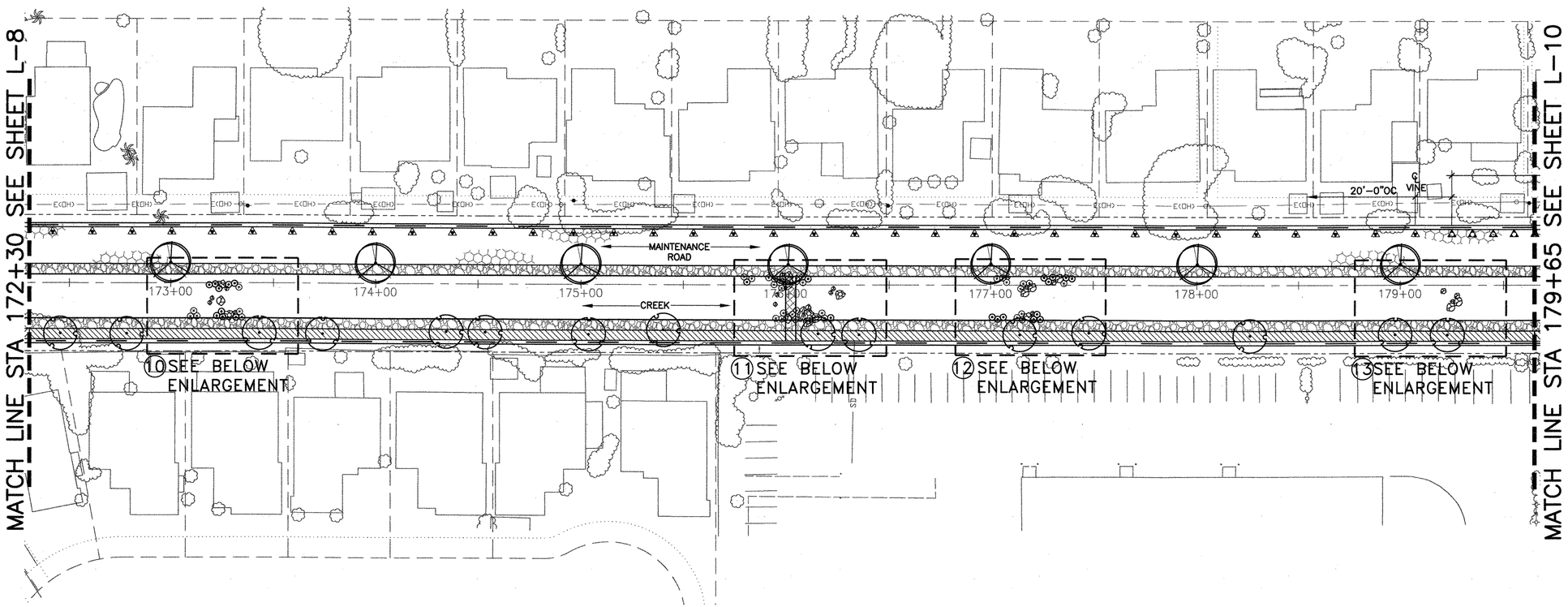

PLANTING AREAS LEGEND

- * LEFT CREEK BANK PLANTING (FLOOD CONVEYANCE AREA)
- * LOWER RIGHT CREEK BANK PLANTING (REVEGETATION/RIPARIAN HABITAT AREAS)
- * UPPER RIGHT CREEK BANK PLANTING (REVEGETATION/RIPARIAN HABITAT AREAS)
- RIP RAP (BY OTHERS)
- MAINTENANCE ROAD (BY OTHERS)
- CREEK BOULDERS (SEE SHEET L-1 AND DETAIL D/L-15)

* SEE SHEET L-1 AND L-2 FOR PLANTING SCHEDULE
* HYDROSEED MIX SHALL BE DISTRIBUTED EVENLY THROUGHOUT ALL DISTURBED AREAS IN THE AMOUNT SPECIFIED ON THE HYDROSEED PLANTING SCHEDULE SHEET L-1

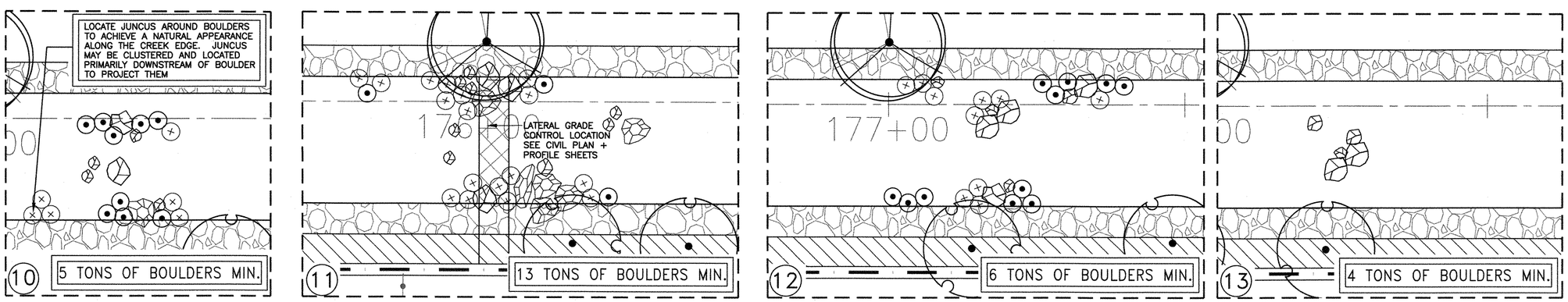

BOULDER PLANTING ENLARGEMENTS

SCALE: 1"=10'-0"

REV	DESCRIPTION	DATE	APPR.	REFERENCE INFORMATION AND NOTES

SSA LANDSCAPE ARCHITECTS INCORPORATED

DATE 05-18-10
DESIGN AH
DRAWN BC
CHECKED AH

ENGINEERING CERTIFICATION
LICENSED LANDSCAPE ARCHITECT STEVE ROBERT SUTHERLAND No. 2805 Exp. 1-31-12 STATE OF CALIFORNIA
5/18/10
PROJECT ENGINEER DATE

Santa Clara Valley Water District
ACCEPTED BY DISTRICT
Dennis Chiang 6/1/10
DATE

PROJECT NAME AND SHEET DESCRIPTION:

LOWER SILVER CREEK REACHES 4, 5 & 6A

PLANTING PLAN STA 172+30 TO STA 179+65

SCALE 1"=30'
VERIFY SCALES 0 1" BAR IS ONE INCH ON ORIGINAL DRAWING IF NOT ONE INCH ON THIS SHEET, ADJUST SCALES ACCORDINGLY

PROJECT NUMBER 40264008
SHEET CODE: L-9
PAGE NUMBER: 180 OF 188

DOCUMENT NUMBER: CAD_XX-X-XXXX-XXXXX

USERNAME: Megan Mon 17 May 2010 06:24pm
FILENAME: \\powervault\SSA Folder\01-Clients\090018.00-Silver Creek Stream Bank Restoration\090018.00-Drawings\CDs\(L013-L24) PLANTING

4026-4371

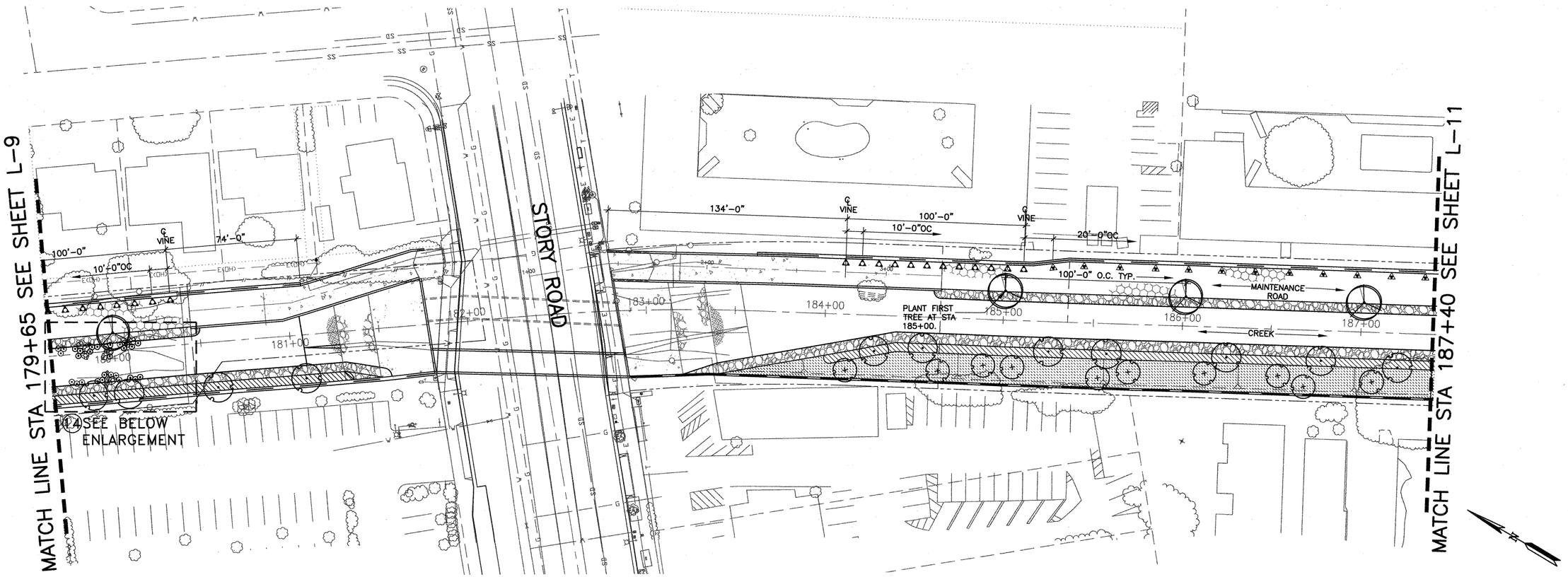

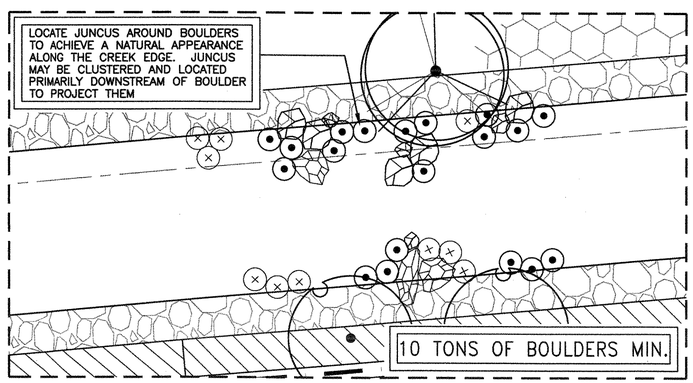

14 BOULDER PLANTING ENLARGEMENT

SCALE: 1"=10'-0"

PLANTING AREAS LEGEND	
	* LEFT CREEK BANK PLANTING (FLOOD CONVEYANCE AREA)
	* LOWER RIGHT CREEK BANK PLANTING (REVEGETATION/RIPARIAN HABITAT AREAS)
	* UPPER RIGHT CREEK BANK PLANTING (REVEGETATION/RIPARIAN HABITAT AREAS)
	RIP RAP (BY OTHERS)
	MAINTENANCE ROAD (BY OTHERS)
	CREEK BOULDERS (SEE SHEET L-1 AND DETAIL D/L-15)

* SEE SHEET L-1 AND L-2 FOR PLANTING SCHEDULE
* HYDROSEED MIX SHALL BE DISTRIBUTED EVENLY THROUGHOUT ALL DISTURBED AREAS IN THE AMOUNT SPECIFIED ON THE HYDROSEED PLANTING SCHEDULE SHEET L-1

REV	DESCRIPTION	DATE	APPR.	REFERENCE INFORMATION AND NOTES

SSA LANDSCAPE ARCHITECTS INCORPORATED

DATE 05-18-10
DESIGN AH
DRAWN BC
CHECKED AH

ENGINEERING CERTIFICATION
LICENSED LANDSCAPE ARCHITECT STEVEN ROBERT SUTHERLAND No. 2805 Exp. 1-31-11 STATE OF CALIFORNIA
PROJECT ENGINEER 5/18/10 DATE

Santa Clara Valley Water District
ACCEPTED BY DISTRICT
Dennis Chiang 6/1/10
DATE

PROJECT NAME AND SHEET DESCRIPTION:

LOWER SILVER CREEK REACHES 4, 5 & 6A

PLANTING PLAN STA 179+65 TO STA 187+40

SCALE 1"=30'
VERIFY SCALES 0 1"
BAR IS ONE INCH ON ORIGINAL DRAWING IF NOT ONE INCH ON THIS SHEET, ADJUST SCALES ACCORDINGLY

PROJECT NUMBER 40264008
SHEET CODE: L-10
PAGE NUMBER: 181 OF 188

DOCUMENT NUMBER: CAD_XX-X-XXXX-XXXXX
9026-43172
USERNAME: Megan Mon 17 May 2010 06:24pm
FILENAME: \\powervault705n\\PowerVault\SSA Folder\01-Clients\090018.00-Silver Creek Stream Bank Restoration\090018.00-Drawings\CDs\(L013-L24) PLANTING

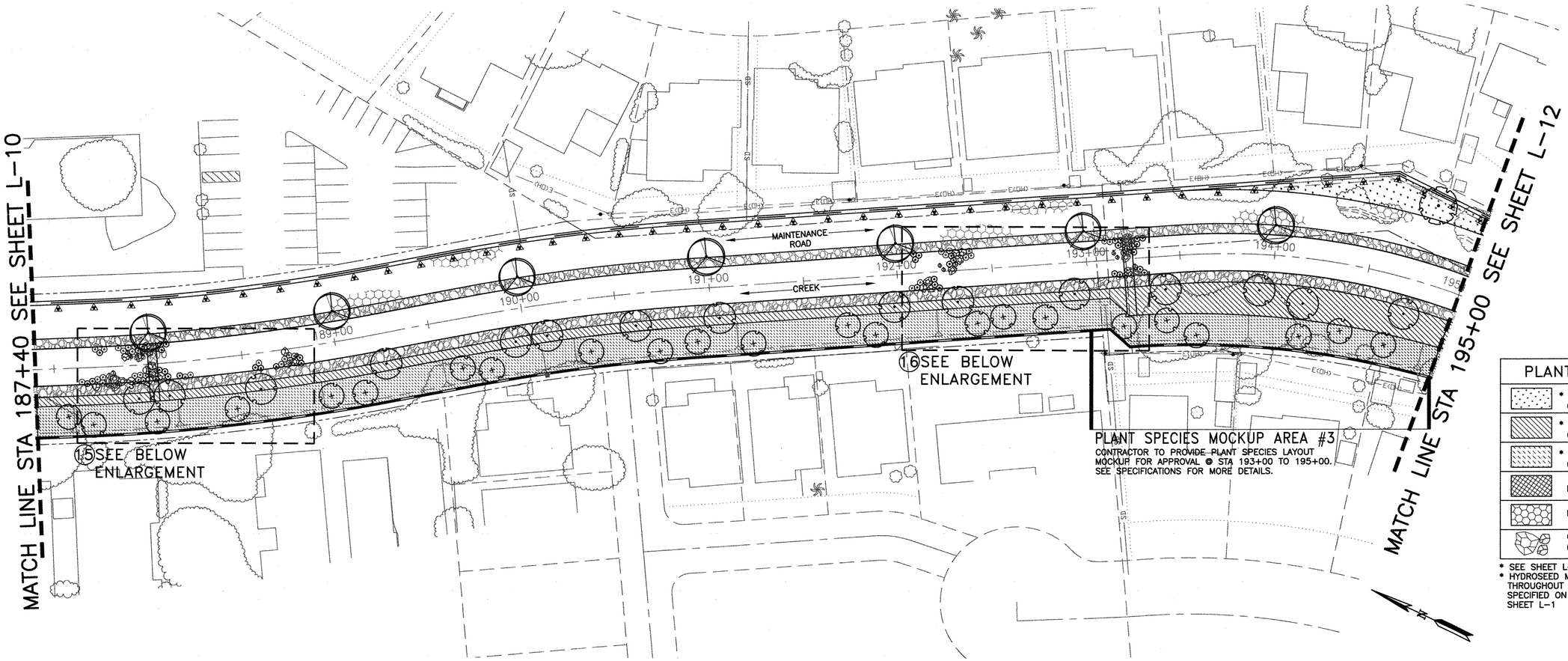

PLANTING AREAS LEGEND

- * LEFT CREEK BANK PLANTING (FLOOD CONVEYANCE AREA)
- * LOWER RIGHT CREEK BANK PLANTING (REVEGETATION/RIPARIAN HABITAT AREAS)
- * UPPER RIGHT CREEK BANK PLANTING (REVEGETATION/RIPARIAN HABITAT AREAS)
- RIP RAP (BY OTHERS)
- MAINTENANCE ROAD (BY OTHERS)
- CREEK BOULDERS (SEE SHEET L-1 AND DETAIL D/L-15)

* SEE SHEET L-1 AND L-2 FOR PLANTING SCHEDULE
* HYDROSEED MIX SHALL BE DISTRIBUTED EVENLY THROUGHOUT ALL DISTURBED AREAS IN THE AMOUNT SPECIFIED ON THE HYDROSEED PLANTING SCHEDULE SHEET L-1

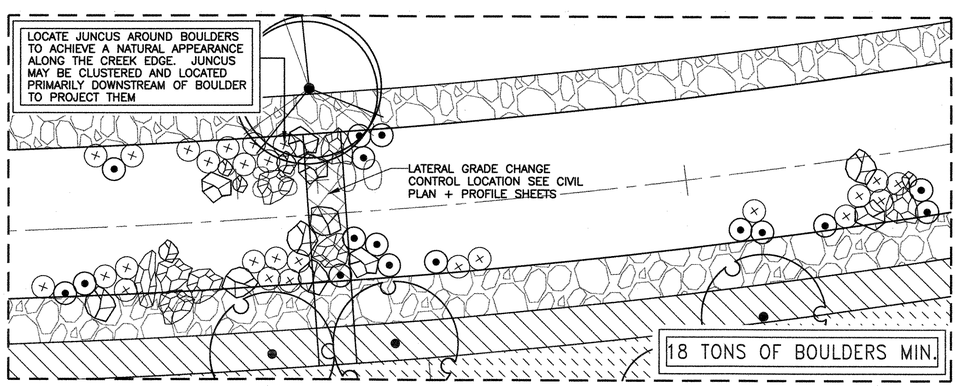

15 BOULDER PLANTING ENLARGEMENT
SCALE: 1"=10'-0"

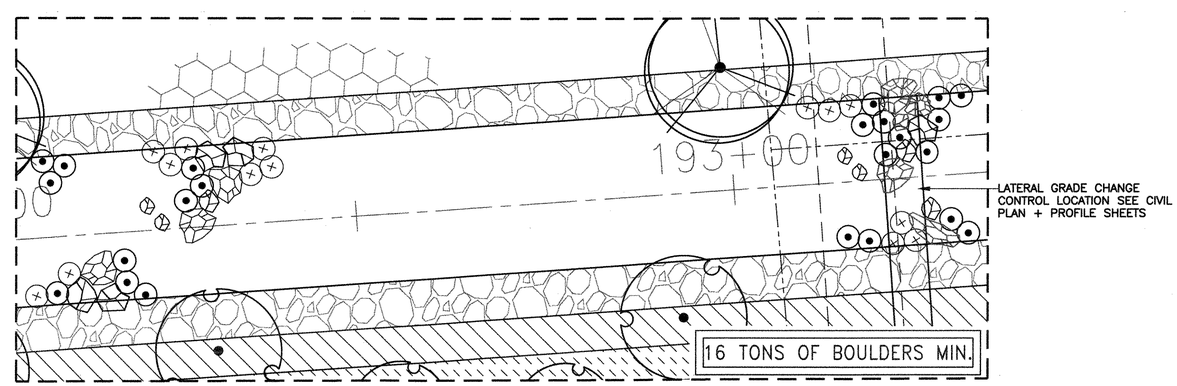

16 BOULDER PLANTING ENLARGEMENT
SCALE: 1"=10'-0"

REV	DESCRIPTION	DATE	APPR.	REFERENCE INFORMATION AND NOTES

SSA LANDSCAPE ARCHITECTS INCORPORATED

DATE 05-18-10
DESIGN AH
DRAWN BC
CHECKED AH

ENGINEERING CERTIFICATION
LICENSED LANDSCAPE ARCHITECT STEVEN ROBERT SUTHERLAND No. 2805 Exp. 1-31-10 STATE OF CALIFORNIA
5/18/10
PROJECT ENGINEER DATE

Santa Clara Valley Water District
ACCEPTED BY DISTRICT
Dennis Cheong 6/11/10
DATE

PROJECT NAME AND SHEET DESCRIPTION:
LOWER SILVER CREEK REACHES 4, 5 & 6A
PLANTING PLAN
STA 187+40 TO STA 195+00

SCALE 1"=30'
VERIFY SCALES 0 1"
BAR IS ONE INCH ON ORIGINAL DRAWING IF NOT ONE INCH ON THIS SHEET, ADJUST SCALES ACCORDINGLY

PROJECT NUMBER 40264008
SHEET CODE: L-11
PAGE NUMBER: 182 OF 188

DOCUMENT NUMBER: CAD_XX-X-XXXX-XXXXX 4026-43/73

USERNAME: Megan Mon 17 May 2010 04:25pm
FILENAME: \\powervault\SSA Folder\01-Clients\090018.00-Silver Creek Stream Bank Restoration\090018.00-Drawings\CDs\(L013-L24) PLANTING

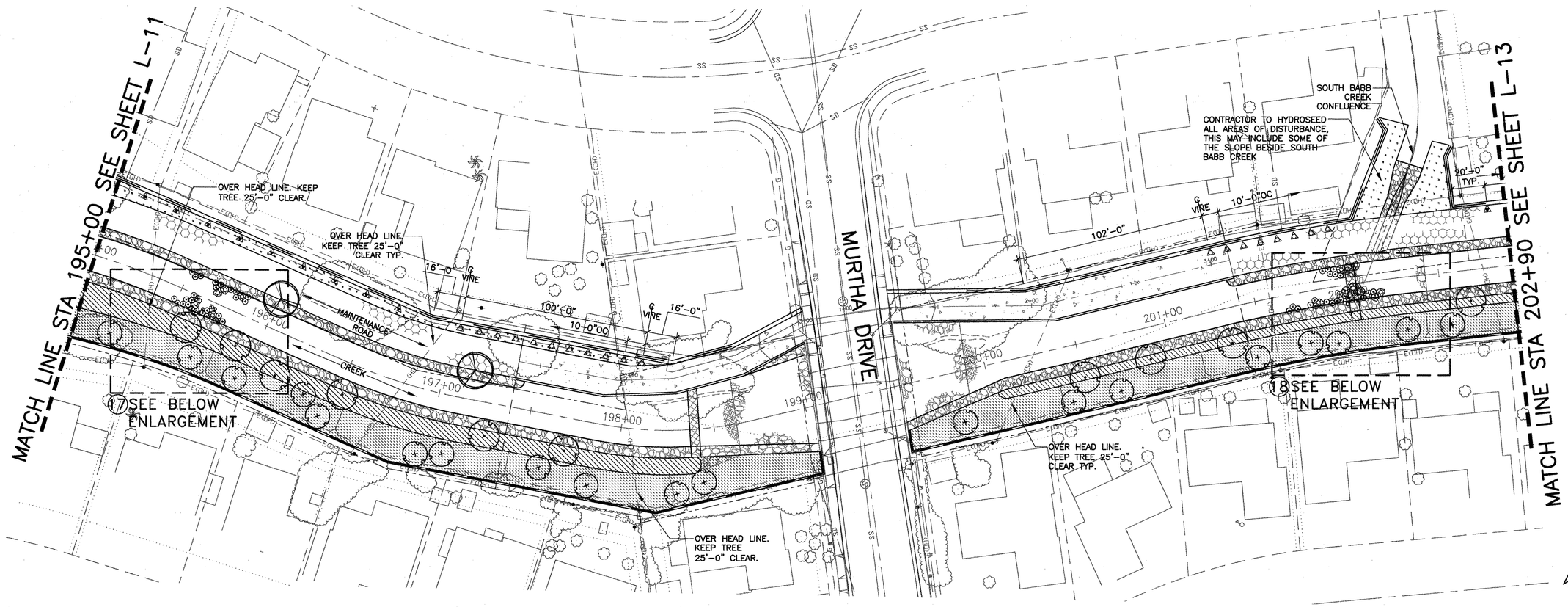

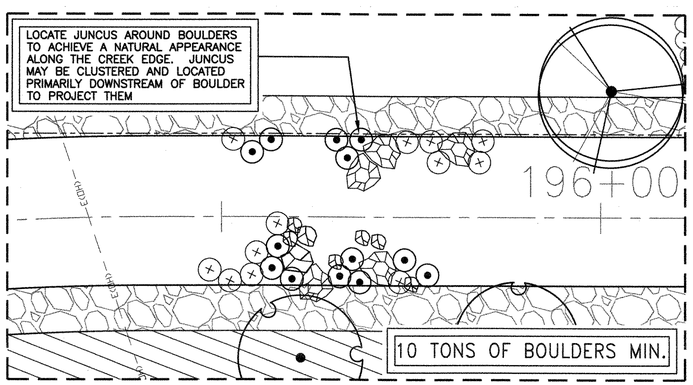

17 BOULDER PLANTING ENLARGEMENT
SCALE: 1"=10'-0"

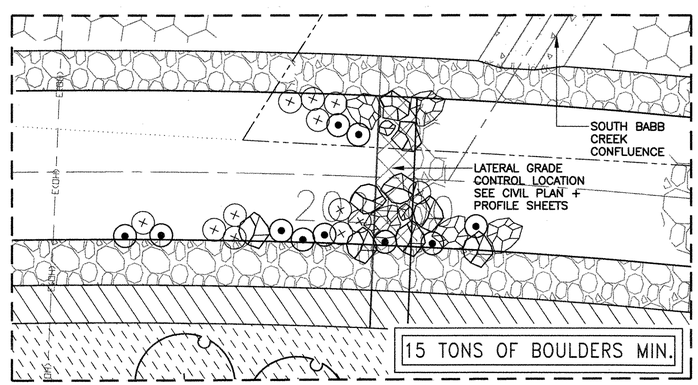

18 BOULDER PLANTING ENLARGEMENT
SCALE: 1"=10'-0"

PLANTING AREAS LEGEND	
	* LEFT CREEK BANK PLANTING (FLOOD CONVEYANCE AREA)
	* LOWER RIGHT CREEK BANK PLANTING (REVEGETATION/RIPARIAN HABITAT AREAS)
	* UPPER RIGHT CREEK BANK PLANTING (REVEGETATION/RIPARIAN HABITAT AREAS)
	RIP RAP (BY OTHERS)
	MAINTENANCE ROAD (BY OTHERS)
	CREEK BOULDERS (SEE SHEET L-1 AND DETAIL D/L-15)

* SEE SHEET L-1 AND L-2 FOR PLANTING SCHEDULE
* HYDROSEED MIX SHALL BE DISTRIBUTED EVENLY THROUGHOUT ALL DISTURBED AREAS IN THE AMOUNT SPECIFIED ON THE HYDROSEED PLANTING SCHEDULE SHEET L-1

REV	DESCRIPTION	DATE	APPR.	REFERENCE INFORMATION AND NOTES

SSA LANDSCAPE ARCHITECTS INCORPORATED

DATE 05-18-10
DESIGN AH
DRAWN BC
CHECKED AH

ENGINEERING CERTIFICATION
LICENSED LANDSCAPE ARCHITECT STEVEN ROBERT SUTHERLAND No. 2805 Exp. 1-31-12 STATE OF CALIFORNIA
5/18/10
PROJECT ENGINEER DATE

Santa Clara Valley Water District
ACCEPTED BY DISTRICT
Dennis Chung 6/1/10
DATE

PROJECT NAME AND SHEET DESCRIPTION:
LOWER SILVER CREEK REACHES 4, 5 & 6A
PLANTING PLAN STA 195+00 TO STA 202+90

SCALE 1"=30'
VERIFY SCALES 0 1" BAR IS ONE INCH ON ORIGINAL DRAWING IF NOT ONE INCH ON THIS SHEET, ADJUST SCALES ACCORDINGLY

PROJECT NUMBER 40264008
SHEET CODE: L-12
PAGE NUMBER: 183 OF 188

DOCUMENT NUMBER: CAD_XX-X-XXXX-XXXXX
4026-93/94

USERNAME: Briana Tue 18 May 2010 11:38am
FILENAME: \\Powervault705n\PowerVault\SSA Folder\01-Clients\090018.00-Silver Creek Stream Bank Restoration\090018.00-Drawings\CDs\(L01-L24) PLANTING

USERNAME: Megan Mon 17 May 2010 06:25pm
FILENAME: \\powervault709n\PowerVault\SSA Folder\01-Clients\090018.00-Silver Creek Stream Bank Restoration\090018.00-Drawings\CDs\(L013-L24) PLANTING

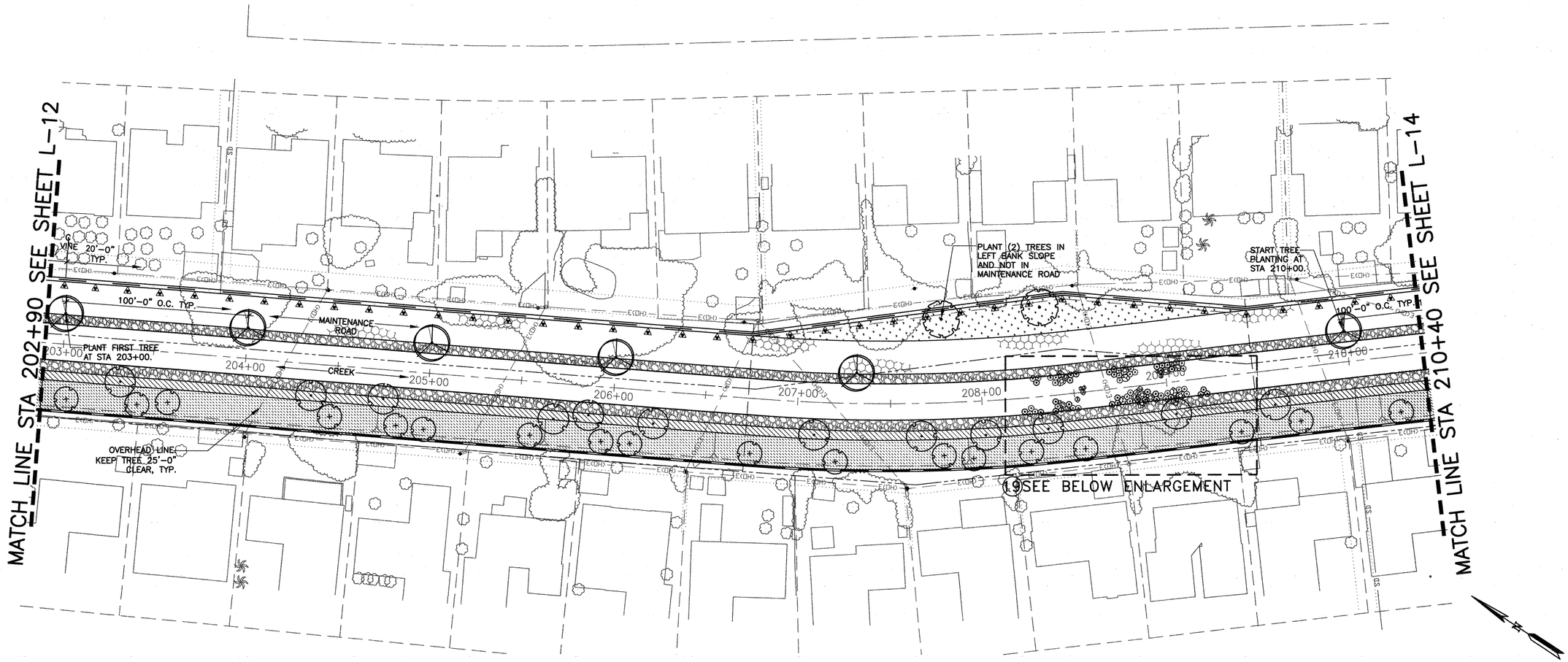

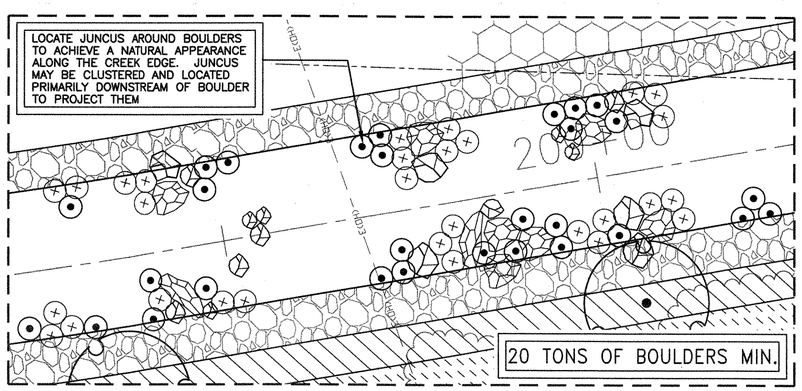

19 BOULDER PLANTING ENLARGEMENT

SCALE: 1"-10'-0"

PLANTING AREAS LEGEND	
	* LEFT CREEK BANK PLANTING (FLOOD CONVEYANCE AREA)
	* LOWER RIGHT CREEK BANK PLANTING (REVEGETATION/RIPARIAN HABITAT AREAS)
	* UPPER RIGHT CREEK BANK PLANTING (REVEGETATION/RIPARIAN HABITAT AREAS)
	RIP RAP (BY OTHERS)
	MAINTENANCE ROAD (BY OTHERS)
	CREEK BOULDERS (SEE SHEET L-1 AND DETAIL D/L-15)

* SEE SHEET L-1 AND L-2 FOR PLANTING SCHEDULE
* HYDROSEED MIX SHALL BE DISTRIBUTED EVENLY THROUGHOUT ALL DISTURBED AREAS IN THE AMOUNT SPECIFIED ON THE HYDROSEED PLANTING SCHEDULE SHEET L-1

REV	DESCRIPTION	DATE	APPR.	REFERENCE INFORMATION AND NOTES

SSA LANDSCAPE ARCHITECTS INCORPORATED

DATE 05-18-10
DESIGN AH
DRAWN BC
CHECKED AH

ENGINEERING CERTIFICATION
LICENSED LANDSCAPE ARCHITECT STEVEN ROBERT SUPERNOR No. 2805 Exp. 1-31-11 STATE OF CALIFORNIA
5/13/10
PROJECT ENGINEER DATE

Santa Clara Valley Water District
ACCEPTED BY DISTRICT
Dennis Cheng 6/1/10
DATE

PROJECT NAME AND SHEET DESCRIPTION:
LOWER SILVER CREEK REACHES 4, 5 & 6A
PLANTING PLAN STA 202+90 TO STA 210+40

SCALE 1"=30'
VERIFY SCALES 0 1"
BAR IS ONE INCH ON ORIGINAL DRAWING IF NOT ONE INCH ON THIS SHEET, ADJUST SCALES ACCORDINGLY

PROJECT NUMBER 40264008
SHEET CODE: L-13
PAGE NUMBER: 184 OF 188

DOCUMENT NUMBER: CAD_XX-X-XXXX-XXXXX 4026 - 93/75

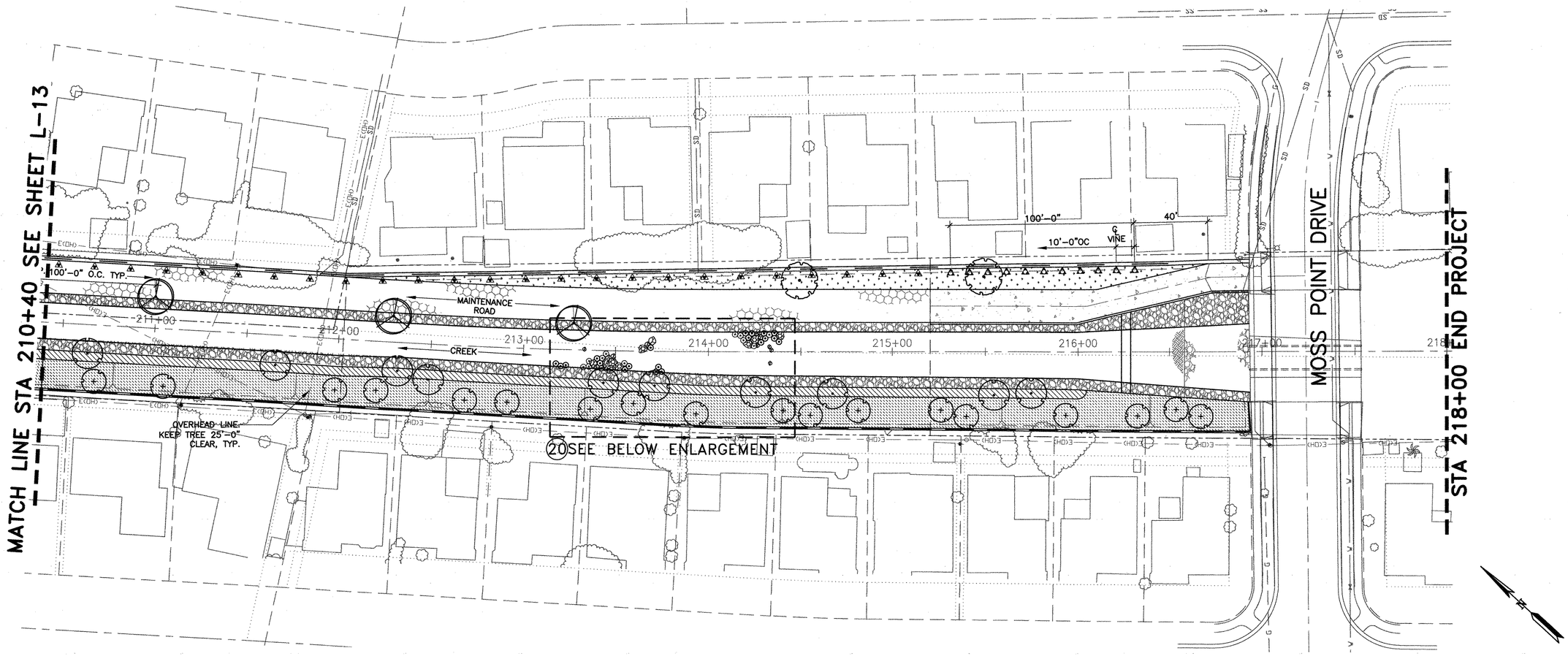

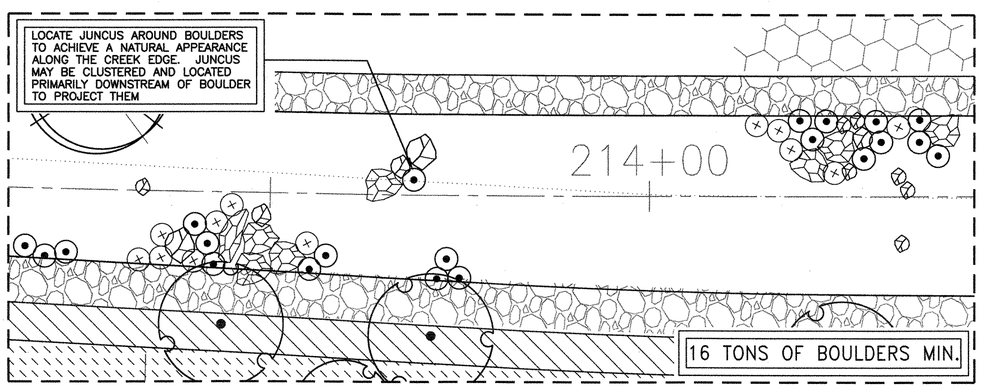

20 BOULDER PLANTING ENLARGEMENT

SCALE: 1"=10'-0"

PLANTING AREAS LEGEND

- * LEFT CREEK BANK PLANTING (FLOOD CONVEYANCE AREA)
- * LOWER RIGHT CREEK BANK PLANTING (REVEGETATION/RIPARIAN HABITAT AREAS)
- * UPPER RIGHT CREEK BANK PLANTING (REVEGETATION/RIPARIAN HABITAT AREAS)
- RIP RAP (BY OTHERS)
- MAINTENANCE ROAD (BY OTHERS)
- CREEK BOULDERS (SEE SHEET L-1 AND DETAIL D/L-15)

* SEE SHEET L-1 AND L-2 FOR PLANTING SCHEDULE
* HYDROSEED MIX SHALL BE DISTRIBUTED EVENLY THROUGHOUT ALL DISTURBED AREAS IN THE AMOUNT SPECIFIED ON THE HYDROSEED PLANTING SCHEDULE SHEET L-1

REV	DESCRIPTION	DATE	APPR.

REFERENCE INFORMATION AND NOTES

SSA LANDSCAPE ARCHITECTS INCORPORATED

DATE 05-18-10
DESIGN AH
DRAWN BC
CHECKED AH

ENGINEERING CERTIFICATION
LICENSED LANDSCAPE ARCHITECT STEVEN ROBERT SUTHERLAND No. 2805 Exp. 1-31-11 STATE OF CALIFORNIA
5/18/10
PROJECT ENGINEER DATE

Santa Clara Valley Water District

ACCEPTED BY DISTRICT
Dennis Cheung 6/1/10
DATE

PROJECT NAME AND SHEET DESCRIPTION:

LOWER SILVER CREEK REACHES 4, 5 & 6A

PLANTING PLAN STA 210+40 TO STA 218+00

SCALE 1"=30'
VERIFY SCALES 0 1"
BAR IS ONE INCH ON ORIGINAL DRAWING IF NOT ONE INCH ON THIS SHEET, ADJUST SCALES ACCORDINGLY

PROJECT NUMBER 40264008
SHEET CODE: L-14
PAGE NUMBER: 185 OF 188

DOCUMENT NUMBER: CAD_XX-X-XXXX-XXXXX

4026 - 43/76

USERNAME: Megan Mon 17 May 2010 06:26pm
FILENAME: \\powervault\SSA Folder\01-Clients\090018.00-Silver Creek Stream Bank Restoration\090018.00-Drawings\CDA\(L013-L24) PLANTING

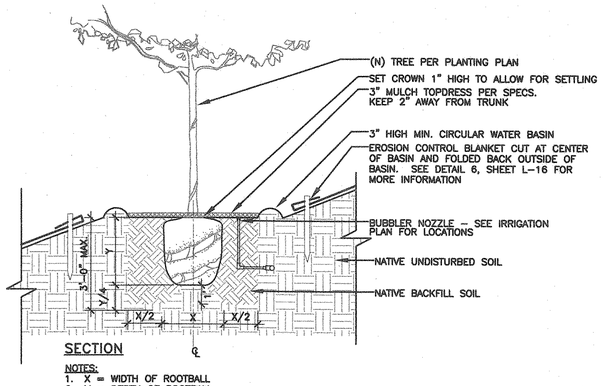

NOTES:
1. X = WIDTH OF ROOTBALL
2. Y = DEPTH OF ROOTBALL
3. GRADE BACKFILL AWAY FROM CROWN

5 LEFT BANK 15-GAL TREE PLANTING
SCALE:

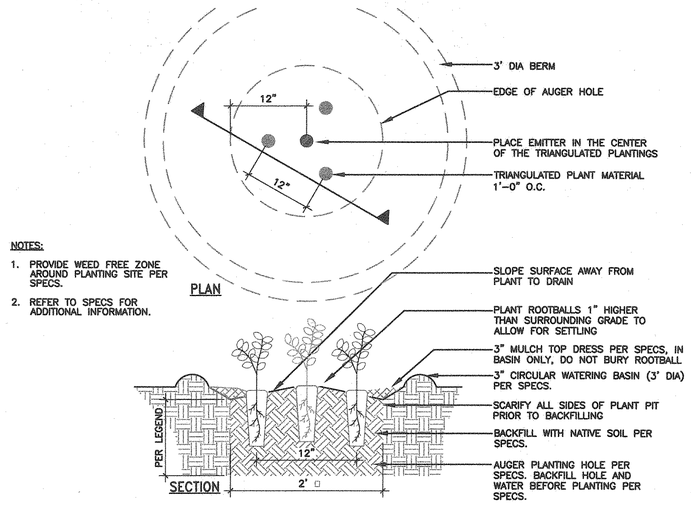

NOTES:
1. PROVIDE WEED FREE ZONE AROUND PLANTING SITE PER SPECS.
2. REFER TO SPECS FOR ADDITIONAL INFORMATION.

3 CLUSTER OF 3 PLANTING
SCALE:1" = 1'-0"

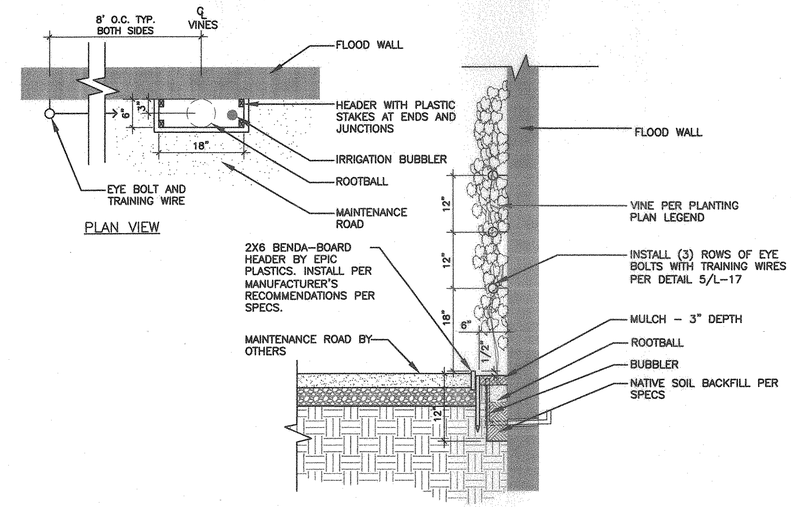

1 VINE POCKET ON LEFT BANK
SCALE:3/4" = 1'-0"

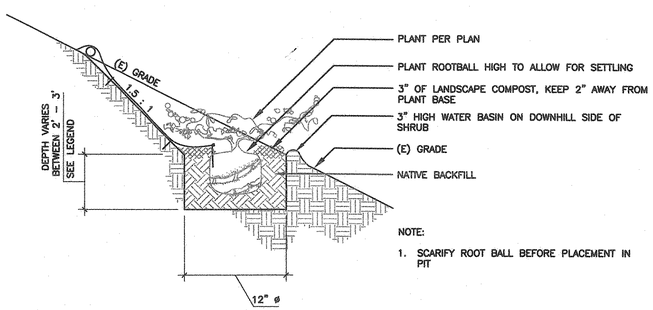

NOTE:
1. SCARIFY ROOT BALL BEFORE PLACEMENT IN PIT

6 SHRUB PLANTING ON SLOPES
1" = 1'-0"

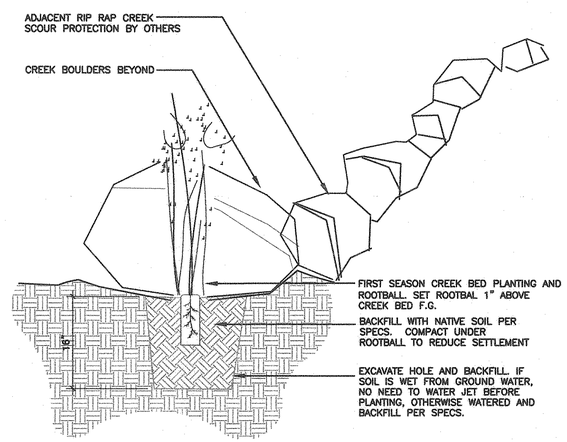

4 PLANTING IN CREEK CHANNEL AT BOULDERS
SCALE:1" = 1'-0"

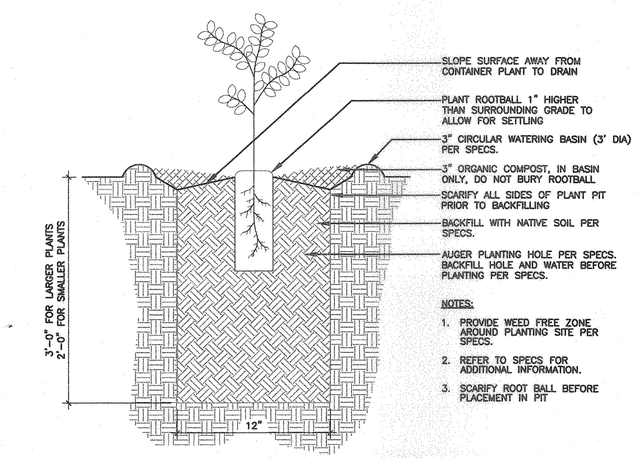

NOTES:
1. PROVIDE WEED FREE ZONE AROUND PLANTING SITE PER SPECS.
2. REFER TO SPECS FOR ADDITIONAL INFORMATION.
3. SCARIFY ROOT BALL BEFORE PLACEMENT IN PIT

2 CONTAINER PLANTING ON BENCHES
SCALE:1" = 1'-0"

REV	DESCRIPTION	DATE	APPR.	REFERENCE INFORMATION AND NOTES

SSA LANDSCAPE ARCHITECTS INCORPORATED

DATE 05-18-10
DESIGN AH
DRAWN BC
CHECKED AH

ENGINEERING CERTIFICATION
LICENSED LANDSCAPE ARCHITECT STEVEN ROBERT SUTHERLAND No. 2805 Exp. 1-31-12 STATE OF CALIFORNIA
PROJECT ENGINEER 5/18/10 DATE

Santa Clara Valley Water District
ACCEPTED BY DISTRICT
Dennis Chiang 6/1/10
DATE

PROJECT NAME AND SHEET DESCRIPTION:
LOWER SILVER CREEK REACHES 4, 5 & 6A
PLANTING DETAILS

SCALE: AS SHOWN
VERIFY SCALES 0 1"
BAR IS ONE INCH ON ORIGINAL DRAWING IF NOT ONE INCH ON THIS SHEET, ADJUST SCALES ACCORDINGLY

PROJECT NUMBER 40264008
SHEET CODE: L-15
PAGE NUMBER: 186 OF 188

USERNAME: Briana Tue 18 May 2010 11:51am
FILENAME: \\Powervault705n\PowerVault\SSA Folder\01-Clients\090018.00-Silver Creek Stream Bank Restoration\090018.00-Drawings\Cda\(L-14) PLANTING DET.
9026 - 43177
DOCUMENT NUMBER: CAD_XX-X-XXXX-XXXXX

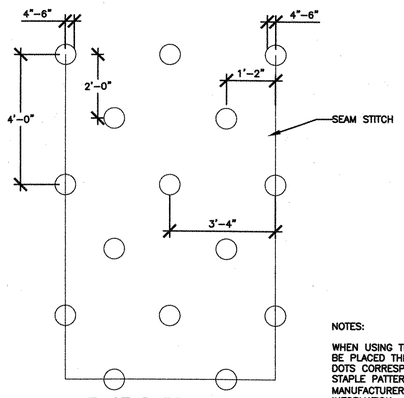

1.7 STAPLES PER SQ. YARD

NOTES:

WHEN USING THE DOT SYSTEM, STAKES SHOULD BE PLACED THROUGH EACH OF THE COLORED DOTS CORRESPONDING TO THE APPROPRIATE STAPLE PATTERN. SEE SPECIFICATIONS AND MANUFACTURER'S INSTRUCTIONS FOR ADDITIONAL INFORMATION.

5 STAPLE PATTERN
SCALE:NTS

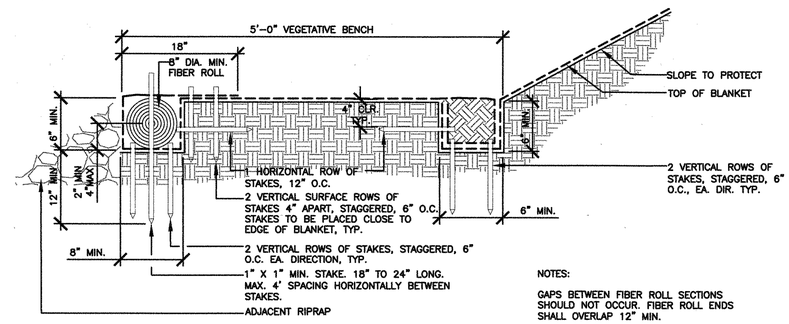

NOTES:

GAPS BETWEEN FIBER ROLL SECTIONS SHOULD NOT OCCUR. FIBER ROLL ENDS SHALL OVERLAP 12" MIN.

3 KEY TRENCHING AT TOE OF SLOPE
SCALE:1" = 1'–0"

NOTES:

1. SEE SPECS FOR EROSION CONTROL BLANKET MANUFACTURER INFORMATION.
2. SLOPE SURFACE SHALL BE FREE OF ROCKS CLODS, STICKS AND GRASS. MATS / BLANKETS SHALL HAVE GOOD SOIL CONTACT.
3. APPLY HYDROSEED BEFORE PLACING BLANKETS.
4. BEGIN AT THE TOP OF THE SLOPE BY ANCHORING THE BLANKET IN A 6" DEEP BY 6" WIDE TRENCH. BACKFILL AND COMPACT THE TRENCH AFTER PINNING.
5. BLANKET WILL UNROLL WITH APPROPRIATE SIDE AGAINST SOIL SURFACE. BLANKET SHALL BE SECURELY FASTENED TO SOIL SURFACE BY PLACING STAKES IN APPROPRIATE LOCATIONS SHOWN IN DETAIL 5, THIS SHEET AND PER MANUFACTURER'S STAPLE PATTERN GUIDE.

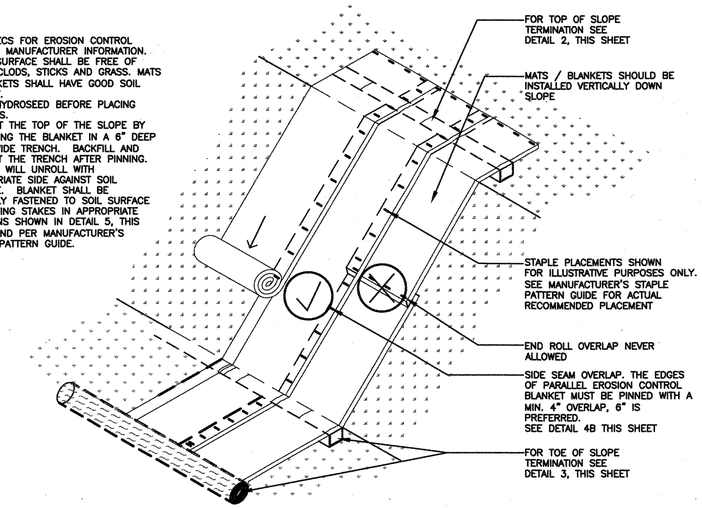

1 EROSION CONTROL / REVEGETATION BLANKET ON SLOPE
SCALE: NTS

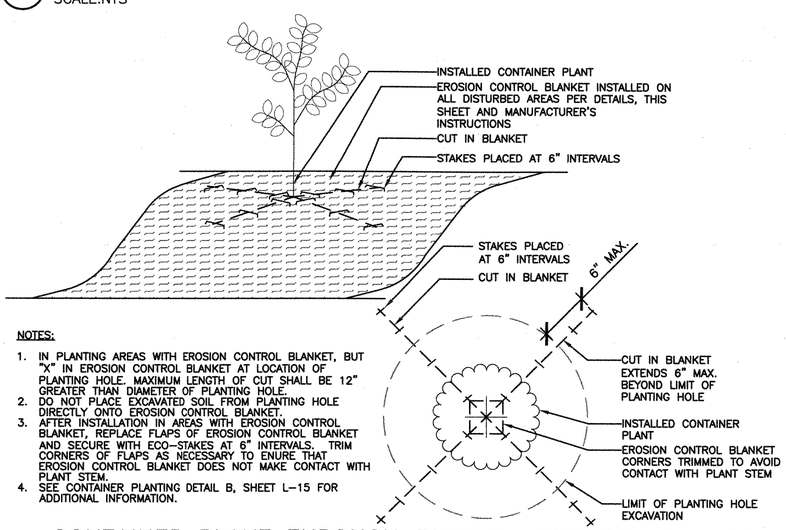

NOTES:

1. IN PLANTING AREAS WITH EROSION CONTROL BLANKET, BUT "X" IN EROSION CONTROL BLANKET AT LOCATION OF PLANTING HOLE. MAXIMUM LENGTH OF CUT SHALL BE 12" GREATER THAN DIAMETER OF PLANTING HOLE.
2. DO NOT PLACE EXCAVATED SOIL FROM PLANTING HOLE DIRECTLY ONTO EROSION CONTROL BLANKET.
3. AFTER INSTALLATION IN AREAS WITH EROSION CONTROL BLANKET, REPLACE FLAPS OF EROSION CONTROL BLANKET AND SECURE WITH ECO–STAKES AT 6" INTERVALS. TRIM CORNERS OF FLAPS AS NECESSARY TO ENURE THAT EROSION CONTROL BLANKET DOES NOT MAKE CONTACT WITH PLANT STEM.
4. SEE CONTAINER PLANTING DETAIL B, SHEET L–15 FOR ADDITIONAL INFORMATION.

6 CONTAINER PLANT THROUGH EROSION CONTROL BLANKET
SCALE:3/4" = 1'–0"

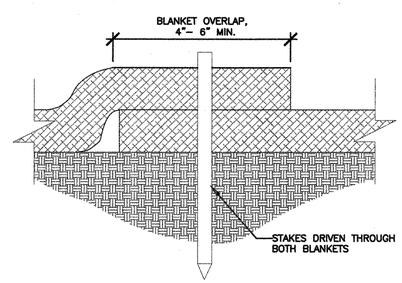

4 ROLLED EROSION CONTROL BLANKET OVERLAP
SCALE:NTS

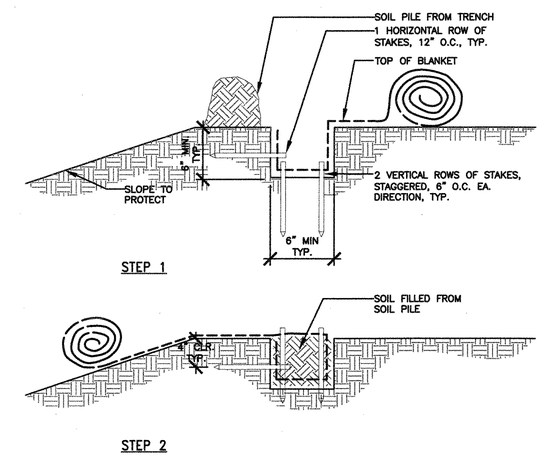

2 KEY TRENCHING AT TOP OF SLOPE
SCALE:1" = 1'–0"

REV	DESCRIPTION	DATE	APPR.	REFERENCE INFORMATION AND NOTES

SSA LANDSCAPE ARCHITECTS INCORPORATED

DATE 05–18–10
DESIGN AH
DRAWN BC
CHECKED AH

ENGINEERING CERTIFICATION
LICENSED LANDSCAPE ARCHITECT STEVEN ROBERT SUTHERLAND No. 2805 Exp. 1–31–12 STATE OF CALIFORNIA
5/18/10
PROJECT ENGINEER DATE

Santa Clara Valley Water District
ACCEPTED BY DISTRICT
Dennis Chiang 6/1/10
DATE

PROJECT NAME AND SHEET DESCRIPTION:
LOWER SILVER CREEK REACHES 4, 5 & 6A
PLANTING DETAILS

SCALE: AS SHOWN
VERIFY SCALES: 0 1" BAR IS ONE INCH ON ORIGINAL DRAWING. IF NOT ONE INCH ON THIS SHEET, ADJUST SCALES ACCORDINGLY
PROJECT NUMBER: 40264008
SHEET CODE: L–16
PAGE NUMBER: 187 OF 188

USERNAME: Briana Tue 18 May 2010 11:51am
FILENAME: \\Powervault705n\PowerVault\SSA Folder\01–Clients\090018.00–Silver Creek Stream Bank Restoration\090018.00–Drawings\CDs\(L–14) PLANTING DET.
DOCUMENT NUMBER: CAD_XX–X–XXXX–XXXXX
4026 - 43178

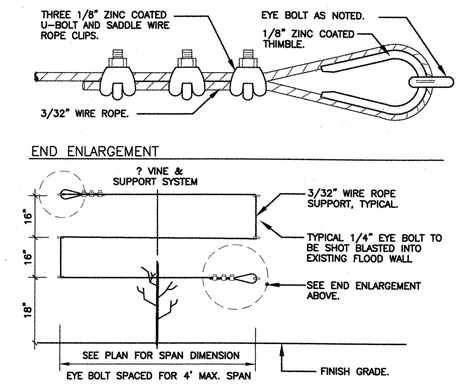

5 TYPICAL WIRE ROPE SUPPORT
SCALE:1" = 1'-0"

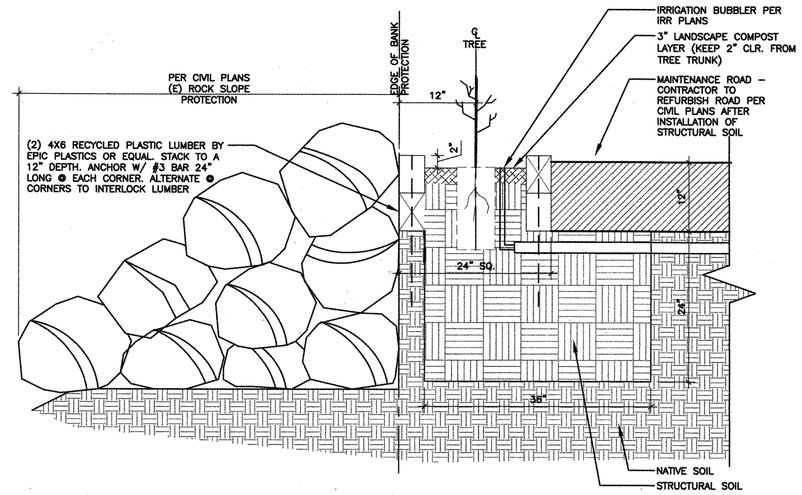

3 TREE PLANTING ALONG MAINTENANCE ROAD – SECTION B
SCALE:1" = 1'-0"

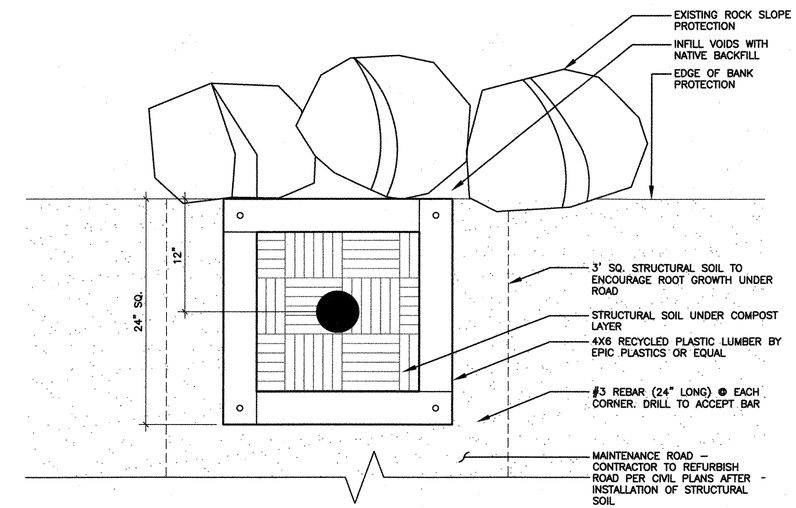

1 TREE PLANTING ALONG MAINTENANCE ROAD
SCALE:1 1/2" = 1'-0"

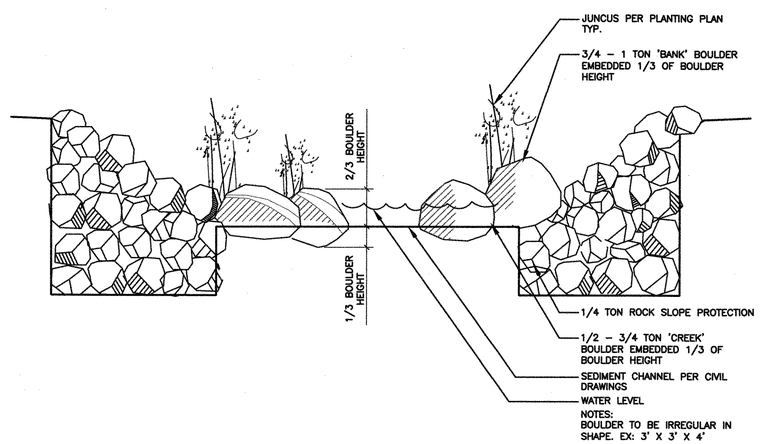

4 BOULDER PLACEMENT
SCALE:3/4" = 1'-0"

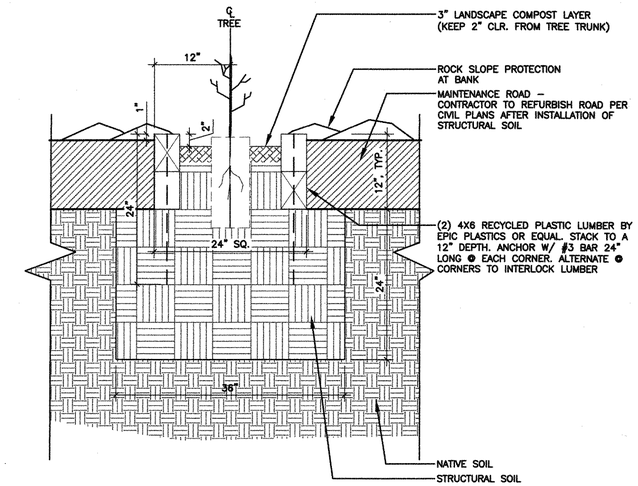

2 TREE PLANTING ALONG MAINTENANCE ROAD – SECTION A
SCALE:1" = 1'-0"

REV	DESCRIPTION	DATE	APPR.	REFERENCE INFORMATION AND NOTES

SSA LANDSCAPE ARCHITECTS INCORPORATED

DATE 05-18-10
DESIGN AH
DRAWN BC
CHECKED AH

ENGINEERING CERTIFICATION
LICENSED LANDSCAPE ARCHITECT STEVEN ROBERT SUTHERLAND No. 2805 Exp. 1-31-11 STATE OF CALIFORNIA
5/18/10
PROJECT ENGINEER DATE

Santa Clara Valley Water District
ACCEPTED BY DISTRICT
Dennis Cheung 6/1/10
DATE

PROJECT NAME AND SHEET DESCRIPTION:
LOWER SILVER CREEK REACHES 4, 5 & 6A
PLANTING DETAILS

SCALE: AS SHOWN
VERIFY SCALES: 0 1" BAR IS ONE INCH ON ORIGINAL DRAWING IF NOT ONE INCH ON THIS SHEET, ADJUST SCALES ACCORDINGLY
PROJECT NUMBER: 40264008
SHEET CODE: L-17
PAGE NUMBER: 188 OF 188

DOCUMENT NUMBER: CAD_XX-X-XXXX-XXXXX
USERNAME: Briana Tue 18 May 2010 11:53am
FILENAME: \\Powervault/70sh\PowerVault\SSA Folder\01-Clients\090018.00-Silver Creek Stream Bank Restoration\090018.00-Drawings\C3s\(L-14) PLANTING DE
9026 - 93/79

APPENDIX 3C-4

100% DESIGN SPECS R4-6

CAPITAL PROGRAM SERVICES
5750 ALMADEN EXPRESSWAY
SAN JOSE, CA 95118-3686
TELEPHONE (408) 265-2600
FACSIMILE (408) 979-5631
www.valleywater.org
scvwdplanroom@valleywater.org

LOWER SILVER CREEK FLOOD PROTECTION AND CREEK RESTORATION PROJECT INTERSTATE 680 TO MOSS POINT DRIVE (REACHES 4, 5 & 6A)

Project No. 40264008

Contract No. C0564

Bid Documents

With

Federal Requirements

Bid Opening: July 14, 2010

(Rev. 03/30/10)

THIS PAGE INTENTIONALLY LEFT BLANK

LOWER SILVER CREEK FLOOD PROTECTION AND CREEK RESTORATION PROJECT

Interstate 680 to Moss Point Drive (Reaches 4, 5 & 6A)

Project No. 40264008

Contract No. C0564

Any unsigned Bid Form(s) may be cause for rejection of bid.

I. NOTICE TO BIDDERS

II. FORMS DUE AT TIME OF BID SUBMITTAL

BID FORM NO. 1	Proposal Form
BID FORM NO. 2	Bid Items—Federal Requirements
BID FORM NO. 3	Designation of Subcontractors
BID FORM NO. 4	Noncollusion Affidavit
BID FORM NO. 5	Small Business Outreach Programs: Instructions and Compliance
BID FORM NO. 6	Bidder's Bond
BID FORM NO. 9	Bidder's Statement of Qualifications for Revegetation Subcontractor

III. FEDERAL REQUIREMENT FORMS DUE AT TIME OF BID SUBMITTAL

BID FORM A	Certification Regarding Use of Contract Funds for Lobbying
BID FORM B	Equal Opportunity Requirements
BID FORM C	EEO Report Certification
BID FORM D	Debarment and Suspension Certification
BID FORM E	Certification of Nonsegregated Facilities

IV. FORMS DUE 2 DAYS AFTER BID OPENING

Failure to comply with this requirement may be cause for rejection of bid as non-responsive.

BID FORM NO. 7	Bidder's General Information
BID FORM NO. 8	Small Business Outreach Program: Requirements for Demonstrating a Good Faith Effort

THIS PAGE INTENTIONALLY LEFT BLANK

LOWER SILVER CREEK FLOOD PROTECTION AND CREEK RESTORATION PROJECT

Interstate 680 to Moss Point Drive (Reaches 4, 5 & 6A)

Project No. 40264008

Contract No. C0564

1. **Notice**. Notice is hereby given that sealed Proposals will be accepted by the Construction Program of the Santa Clara Valley Water District, Room B108, of the District's Administration Building, 5750 Almaden Expressway, San Jose, California 95118 up to 2 p.m. on **July 14, 2010**, for furnishing all material and performing all work necessary for construction of the **Lower Silver Creek Flood Protection and Creek Restoration Project, Interstate 680 to Moss Point Drive, San Jose, California.**

2. **Summary of Work**

   A. **Project Description**. The project scope includes:

   Furnishing labor, equipment, materials, and incidentals to construct and complete, in accordance with the Specifications, the following major items of work:

   Furnishing labor, equipment, materials, and incidentals to construct and complete, in accordance with the Specifications, the following major items of work:

   1. Compliance with NPDES General Permit, including SWPPP preparation, installation of BMP'
   2. Clearing and grubbing within the project limits, including the removal of trees, vegetation, sack concrete, and other miscellaneous items
   3. Channel excavation and embankment, including construction of 1.5:1 slopes, and removal and replacement of unsuitable material, in order to increase the channel capacity (Approximately 107,500 cubic yards)
   4. Construction and surfacing of a maintenance road along one side of the existing Lower Silver Creek within the project limits. (Approximately 122,370 square feet)
   5. Street reconstruction where the channel crosses under public streets at five (5) locations: Jackson Avenue; Capitol Expressway; Story Road; Murtha Drive; and Moss Point Drive.
   6. Construction of PCC access ramps from the streets onto the maintenance road (Approximately 24,200 square feet)

7. Construction of RCP and CMP storm drains and appurtenances, ranging in size from 15” to 54”, including a 24” elliptical RCP
8. Modification of storm drain outfalls
9. Replacement and relocation of VCP, DIP and PVC sanitary sewer main, including two (2) sanitary sewer siphons, one being a bore and jack installation
10. Traffic control
11. Chain link and wood privacy fencing and chain link gates (Approximately 33,500 linear feet)
12. Cast-in-place reinforced concrete box culvert, five (5) total, at Jackson Avenue
13. Addition of one (1) Pre-cast reinforced concrete box culvert at Capitol Expressway
14. Addition of one (1) Pre-cast reinforced concrete box culvert at Story Road
15. Replacement of the Lyndale Pedestrian Bridge
16. Drilled pier flood and retaining walls (Approximately 38,270 square feet)
17. Cantilever retaining walls at access ramps (Approximately 18,310 square feet)
18. Soldier pile retaining walls (Approximately 111,600 square feet)
19. U-channel near Jackson Ave. (Approximately 10,350 square feet)
20. Channel lining at North Babb Creek
21. Channel lining at South Babb Creek
22. ¼ Ton rock lining in certain locations of the Lower Silver Creek Channel (Approximately 20,400 cubic yards)
23. Concrete lining in certain locations of the Lower Silver Creek Channel (Approximately 3,150 square feet)
24. Grouted rock lining in certain locations of the Lower Silver Creek Channel (Approximately 1,080 cubic yards)
25. 1.5:1 slope toe protection construct from ¼ ton rock (Approximately 710 cubic yards)
26. Revegetation planting (Approximately 130,300 square feet)
27. Landscaping planting (Approximately 370 vines & trees)
28. Landscaping irrigation system
29. Landscape maintenance which includes the maintenance during the landscape installation and the maintenance during a three-year establishment period following the landscape installation
30. Other miscellaneous construction work and items necessary to satisfactorily complete the work.

B. Sole Source Products. Not used.

3. Contract Time - Time limit for the completion.

1. Base Work (Interstate 680 to North Babb Creek): 2254 total calendar days including1158 calendar days for the installation period, and 1096 calendar days for the maintenance period, measured beyond the installation period.

   Base Work Milestone Items are:

   A. Milestone 1: Penrod Place work, including sanitary sewer relocation and PVC storm drain structure construction, including all roadway restoration, striping and other related work complete by May 1, 2011.

   B. Milestone 2: Phase 1 Jackson Avenue work completed including Phase 1 traffic control totally removed and either Phase 2 traffic control installed or original condition restored by November 1, 2011.

   C. Milestone 3: U-Channel between Interstate 680 and Jackson Avenue work complete by November 1, 2011.

   D. Milestone 4: Phase 2 Jackson Avenue work completed by November 1, 2012 with Phase 2 traffic control remaining until either March 1, 2013 or the start of the Phase 3 Jackson Avenue work, whichever is later.

   E. Milestone 5: Capitol Expressway work (all phases) complete, including removal of the Phase 4 traffic control and installation of permanent traffic markings and signs by November 1, 2012.

   F. Milestone 6: All other work within the Base Work area, except for Jackson Avenue Phase 3 and Phase 4 work, complete by November 30, 2012.

   G. Milestone 7: Phase 3 Jackson Avenue work completed including Phase 3 traffic control totally removed and installation of permanent traffic markings and signs by November 1, 2013.

   H. Milestone 8: Phase 4 Jackson Avenue work completed by December 1, 2013

2. Bid Additive 1 (BA1), North Babb Creek up to, but not including Story Road: 2255 total calendar days. One (1) additional calendar day over the Base Work days for the installation period, and 1096 calendar days for the BA1 maintenance period, measured beyond the BA1 installation period.

   BA1 Milestone Item is:

   A. Milestone 1, BA1: All special structures and work within the new channel (property line-to-property line) complete by December 2, 2013.

3. Bid Additive 2 (BA2), Story Road to Murtha Drive Centerline: 2619 total calendar days. 365 additional calendar days over the Base Work days for the installation, and 1096 calendar days for the BA2 maintenance period, measured beyond the BA2 installation period.

   BA2 Milestone Item is:

   A. Milestone 1, BA2: All special structures, work within the new channel and Story Road items of work within the travel way, complete by December 1, 2014.

4. Bid Additive 3 (BA3), Murtha Drive Centerline to Moss Point Centerline: 2620 total calendar days. 366 additional calendar days over the Base Work days for the installation period, and 1096 calendar days for the BA3 maintenance period, measured beyond the BA3 installation period.

   BA3 Milestone Item is:
   A. Milestone 1, BA3: All special structures and work within the new channel complete by December 2, 2014.

4. **Liquidated Damages**. See Special Provisions Article 11.07 of the contract documents for requirements regarding Liquidated Damages.

5. **Estimated Cost**. The estimated cost for the Base Work and all Additives or total project cost of the project is between $33M and $40M. This estimate is intended to serve merely as an indication of the magnitude of the work. Neither the Bidder(s) nor the Contractor will be entitled to pursue a claim or be compensated due to variance in the stated estimated cost range.

A. **Additive/Deductive Bid Items**.

The basis of the award will be the sum of the Total Base Bid plus Additive 1, North Babb Creek up to but not including Story Road.

The Bid price stated in the bidder's proposal must include prices for all Bid Items, Base Bid, and all Additives, Sections I, II, III, and IV of Bid Form 2. Additive(s) will not be awarded independent of Base Bid Work. The District has sole discretion to determine which Additive(s) to award, if any. Additive Bid Item(s) will be awarded in numerical order.

B. **Supplemental Bid Items**. Not Used

6. **Contractor's License Requirement**. The Bidder must possess a Class A Contractor's license when the contract is awarded.

7. **Pre-Bid Conference and Site Showing**. A pre-bid conference and site showing will be conducted by the District on **June 24, 2010**. The conference will convene at 10 a.m. at Capitol Park at Bambi Lane, San Jose, California. The pre-bid conference will begin with a District presentation on special contract requirements for use of federal funding. The site showing will follow the pre-bid conference. A Bid submitted by any Bidder not represented at a mandatory pre-bid conference and site showing will be considered non-responsive. Attendance at the pre-bid conference by subcontractors is not required.

Attendance by the Bidder at the pre-bid conference/site visit is:

☒ Mandatory

☐ Optional

The objective of the site visit is to familiarize prospective Bidders with the site. No additional site visits will be allowed. Please confirm your intent to attend the pre-bid meeting and site visit 24 hours in advance by sending e-mail to scvwdplanroom@valleywater.org or by calling the District Plan Room at (408) 265-2607, extension 3088. The project site is located between Interstate 680 and Moss Point Drive, San Jose, California.

Reasonable efforts will be made to accommodate persons with disabilities wishing to attend the pre-bid meeting/site visit. Please request accommodations when confirming attendance.

8. **Availability of Bid Documents**. Contract documents, including Drawings and Specifications, are available in both paper and electronic (.pdf) versions. They may be purchased for the following nonrefundable prices; paper version is $120 plus $20 per set for packaging and postage, if FEDEX number is not provided. CD version is $10 plus $10 per disc for packaging and postage, if Fed Ex number is not provided. Electronic version is $10, transferred via file transfer protocol (FTP) site.

To pick up contract documents in person:	Santa Clara Valley Water District 5700 Almaden Expressway San Jose, CA 95118 Business Hours: 8 a.m. – 5 p.m.
To order contract documents:	Email: scvwdplanroom@valleywater.org FAX: (408) 979-5631 Phone: (408) 265-2607 x3088 Request Form and information available online. Website: http://www.valleywater.org/Programs/Construction.aspx

9. **Inquiries**. The Bidder must submit all requests for clarification, or interpretation of the Bid Documents in accordance with the requirements stated in Article 3.04 of the Standard Provisions. Written questions must be directed to the project manager and submitted at least ten (10) calendar days before the deadline for receipt of Bids.

The District may issue written Addenda as appropriate for clarification or other purposes during the bidding period.

A. **Project Manager**. The District's project manager for this project is Ms. Erika Powell and can be reached via e-mail at erikapowell@ch2M.com or at (408) 436-4936, extension 37438.

B. **Process Questions**. For questions regarding the advertisement process, contact the District Plan Room at (408) 265-2607, extension 3088, or scvwdplanroom@valleywater.org.

10. **Prevailing Wage Requirements**. The Contractor is required to comply with all provisions of the Davis-Bacon Act regardless of which wage rate is paid to workers. Also, see Standard Provisions – Articles 6.04 through 6.06 for related requirements. Workers employed on this project must be paid at the higher rates of either A or B below.

A. The prevailing wage rates as determined by the State of California Department of Industrial Relations pursuant to §1770 of the Labor Code. The State's wage rates are incorporated herein by reference and may be inspected upon request. The rates are also available on the State of California Department of Industrial Relations website at http://www.dir.ca.gov/.

B. The federal wage rates as determined by the U.S. Department of Labor, which are included in Appendix B of the Specifications. The federal wage rates are also available on the Davis-Bacon Wage Determinations web site at http:/www.gpo.gov/davisbacon.

11. **Bid Proposal Submittal**. All Proposals must be submitted in sealed envelopes addressed to Construction Program of the Santa Clara Valley Water District, and state the project name and project number on the outside of the sealed envelope. Each Bid must be submitted on the prescribed Bid Forms. All information on Bid Forms must be completed in ink.

A. **Alternate Delivery for Bid Submittal**. Bidders electing to submit a Proposal by FEDEX, UPS, DHL, CA Overnight, Golden State Overnight, etc., must address the submittal in accordance with instructions stated in Paragraph 11 above. Any Proposal received after 2 p.m. will be considered non-responsive.

Address the outside delivery envelope as follows:

Santa Clara Valley Water District
Attention: Construction Program – **BID**
5905 Winfield Boulevard
San Jose, CA 95123-2428
Note: USPS (US Mail) does not deliver to 5905 Winfield Boulevard

12. **Bid Opening**. The Construction Program staff will open Proposals at the time and place stated in Paragraph 1 above.

13. **Errors or Discrepancies in the Bids**. The District Board of Directors reserves the right to reject any and all Bid Proposals and to waive minor defects or irregularities in any submitted Bid Form(s).

14. **Bidders Security**. Each Proposal must be accompanied by cash, a certified or cashier's check, or a Bidder's bond in the sum of not less than 10 percent of the total aggregate of the Proposal including all additive Bid items. Said checks or bonds must be made payable to the Santa Clara Valley Water District.

15. **Escrow Bid Documents**. Escrow Bid Documents must be submitted by the three apparent low bidders in a sealed container, separate from their proposal, no later than 5 p.m. on the first Monday following the Bid opening day. Each container shall be clearly marked on the outside with the bidder's name, date of submittal, project name, and the words ―Escrow Documents."

    The Escrow Bid Documents must be accompanied by a separate certification, signed by an individual authorized by the bidder to execute the bidding proposal, stating that the material in the Escrow Documents constitutes all of the documentary information used in preparation of this bid, and that he/she has personally examined the contents of the Escrow Documents container and has found that the documents in the container are complete.

    Escrow Bid Document requirements are set forth in the Standard Provisions.

16. **Substitution of Securities**. The Contractor may, at the Contractor's request and expense, substitute securities equivalent to the amount withheld by District to ensure the performance of the contract in accordance with §22300 of the Public Contract Code.

17. **Small Business Preference**. The District has elected to implement the small business preference provisions of Public Contract Code §2002(a)(1). For purposes of the District's program, a small or micro-business is as defined in Government Code §14837. Please refer to the small business compliance requirements stated in the Small Business Instructions included with these Bid documents.

18. **Buy American.** This project is subject to the Buy American provisions of the American Recovery and Reinvestment Act of 2009 (ARRA) Section 1605, Use of American Iron, Steel, and Manufactured Goods. See Appendix B to the Specifications for the full text of the ARRA Buy American Requirements.

    To comply with the requirements of the Buy American provisions of ARRA, a markup of 25-percent of the apparent low bid will be applied to the total price of a bid when ―foreign", excluding from designated countries, steel, iron or manufactured construction material is utilized in the bid. In addition, a 6 percent markup will be applied to ―foreign", excluding from designated countries, unmanufactured construction material, but only to the price of the material itself (i.e., delivery cost is not included).

19. **Nonsegregated Facilities.** The Bidder is required to sign and submit the Certification of Nonsegregated Facilities, Bid Form E, and to require a similar certification from all subcontractors.

20. **Governmentwide Debarment and Suspension.** The Bidder shall comply with the provisions of subpart C of 2 CFR Part 1326, which generally prohibits entities that have been debarred, suspended, or voluntarily excluded from participation in Federal nonprocurement transactions.

21. **New restrictions on lobbying bidders and subcontractors at any tier with a covered transaction greater than $100,000 are subject to 15 CFR Part 28, "New Restrictions on Lobbying" including certification on Bid Form A**. Lower tier covered transactions must include a Form CD-512, "Certification Regarding Lobbying – Lower Tier Covered Transactions" and be completed without modification.

22. This project is partially funded by USDA/NRCS with funds from the American Recovery and Reconstruction Act of 2009 (ARRA). The Bidders and Contractor are required to comply with federally mandated rules and requirements. Special attention is directed to Appendix B of the Specifications and the Federal Requirements Bid Forms included in the bid documents.

The District is an equal opportunity employer and all contractors of District projects are to have and follow a policy of equal opportunity including adherence to all state and federal laws and regulations, including the Federal Equal Opportunity Clause.

By order of the Board of Directors of the Santa Clara Valley Water District, San Jose, California, on June 8, 2010.

ATTEST: MICHELE L. KING

Michele L. King

Clerk/Board of Directors

*This form must be completed in **ink** and changes must be **initialed**.*

Honorable Board of Directors
Santa Clara Valley Water District (District)

Pursuant to, and in compliance with, the Notice to Bidders and the Contract Documents, relating to the **LOWER SILVER CREEK, FLOOD PROTECTION AND CREEK RESTORATION PROJECT INTERSTATE 680 TO MOSS POINT DRIVE (REACHES 4, 5 AND 6A),** the undersigned Bidder having become thoroughly familiar with the terms and conditions of the Contract Documents and with local conditions affecting the performance and costs of the Work and having fully inspected the Work site in all particulars, hereby proposes and agrees to fully perform the Work, including providing any and all labor and materials and performing all Work required to construct and complete said Work within the contract time stated and in accordance with the requirements of the Contract Documents, for the following sum of money.

The undersigned Bidder agrees to complete all the Base Work within 1158 calendar days from the first chargeable day of the Contract, as stated in the Notice to Begin Work. The Bidder agrees to enter into a Contract with the District and provide the required bonds and insurance in accordance with Articles 4.03. & 4.04. of the Standard Provisions. If the Bidder fails to meet these requirements within the time specified in Article 4.04 of the Standard Provisions the Bidder's security accompanying this Proposal may be forfeited and become the property of the District. No Contract exists until all Contract bonds and insurance documents have been accepted by the District.

TOTAL BID: $_____

BASIS OF AWARD: $_____

Bidder acknowledges receipt of the following Addenda to the Bid Documents:
Addenda are posted online at www.valleywater.org/Programs/Construction.aspx.

☐ **NO** Addenda received

☐ Addenda received as follows:

Addendum No. _____ Date _____

Addendum No. _____ Date _____

Addendum No. _____ Date _____

Addendum No. _____ Date _____

Failure to acknowledge receipt of an Addendum on the Bid Form is not, in itself, cause for withdrawal or rejection of Bid, if it can be established that Bidder did, in fact, receive such Addendum prior to Bid opening.

*This form must be completed in **ink** and changes must be **initialed**.*

The undersigned Bidder has read and understands, and will comply with, each and all of the requirements specified in these Bid Documents.

BIDDER'S COMPANY INFORMATION

Name: _____

Address: _____

_____

Phone No.: ( ) _____

Fax No.: ( ) _____

Email Address: _____

Contractor's California License

Number: _____

Date of Expiration: _____

License Classification(s): _____

SIGNATURE BLOCK (Signature Block must be completed in *ink* and changes must be *initialed*.)	
Bidder's Signature:	Date:
Bidder's Name and Title (Print):	

*This form must be completed in **ink** and changes must be **initialed**.*

SECTION I – BASE BID (BB)

ITEM NO.	DESCRIPTION OF ITEM	APPROXIMATE QUANTITY / UNIT	UNIT PRICE	TOTAL
1A	Compliance With NPDES General Permit (BB)	Lump Sum		
1B	Dispute Review Board (BB)	Lump Sum	LS	$80,000
1C	Site Review and Monitoring of Project Limits and Vicinity (BB)	Lump Sum		
1D	Noise and Vibration Monitoring (BB)	Lump Sum		
1E	Building Service Modifications at Capitol Expressway (BB)	Lump Sum	LS	$50,000
1F	Quality Assurance Requirements (BB)	Lump Sum		
2	Mobilization (BB)	Lump Sum		
3	Clearing and Grubbing (BB)	Lump Sum		
4	Concrete Removal (BB)	Lump Sum		
5	Concrete Structures Removal (BB)	Lump Sum		
6	Monitoring Well Destructions (BB)	2 Each		
7	Erosion Control Hydroseeding (BB)	26,200 Square Ft.		
8	Erosion Control Blanket (BB)	26,200 Square Ft.		
9	Channel Excavation and Embankment (BB)	49,200 Cubic Yards		
10	Roadway Restoration – Jackson Avenue and Capitol Expressway (BB)	Lump Sum		

*This form must be completed in **ink** and changes must be **initialed**.*

ITEM NO.	DESCRIPTION OF ITEM	APPROXIMATE QUANTITY / UNIT	UNIT PRICE	TOTAL
11	Concrete Curb, Gutter (BB)	4,250 Linear Ft.		
12	Concrete Sidewalk (BB)	4,215 Square Ft.		
13	Concrete Driveways (BB)	735 Square Ft.		
14	Aggregate Maintenance Road (BB)	58,120 (F) Square Ft.		
15	Concrete Maintenance Road (BB)	950 (F) Square Ft.		
16	Decomposed Granite Maintenance Access (BB)	39,090 (F) Square Ft.		
17	36-Inch CMP Storm Drain (BB)	40 Linear Ft.		
18	54-Inch CMP Storm Drain (BB)	40 Linear Ft.		
19	Storm Drain Outfall Modifications (BB)	Lump Sum		
20	Storm Drain and Sanitary Sewer Manholes (BB)	12 Each		
21	6-Inch VCP Sanitary Sewer Main (BB)	405 Linear Ft.		
22	12-Inch VCP Sanitary Sewer Main (BB)	290 Linear Ft.		
23	24-Inch VCP Sanitary Sewer Main (BB)	85 Linear Ft.		
24	36-Inch VCP Sanitary Sewer Main (BB)	70 Linear Ft.		
25	10-Inch DIP Sanitary Sewer Main (BB)	320 Linear Ft.		
26	24-Inch DIP Sanitary Sewer Main (BB)	330 Linear Ft.		
27	Penrod Pace PVC Storm Structure (BB)	Lump Sum		

*This form must be completed in **ink** and changes must be **initialed**.*

ITEM NO.	DESCRIPTION OF ITEM	APPROXIMATE QUANTITY / UNIT	UNIT PRICE	TOTAL
28	Sanitary Sewer Siphon – Bore & Jack (Capitol Expressway) (BB)	Lump Sum		
29	Sanitary Sewer Siphon – Open Cut (Jackson Avenue) (BB)	Lump Sum		
30	Traffic Control (Jackson Avenue) (BB)	Lump Sum		
31	Traffic Control Capitol Expwy (BB)	Lump Sum		
32	TYPE CL-3.5 Black Vinyl Coated Fence (BB)	8,000 Linear Ft.		
33	TYPE CL-6 Black Vinyl Coated Fence (BB)	105 Linear Ft.		
34A	TYPE CL-6 Galvanized Fence (BB)	8,100 Linear Ft.		
34B	TYPE CL-6 Galvanized Gap Fence (BB)	880 Linear Ft.		
35	Wood Privacy Fence (BB)	380 Linear Ft.		
36	TYPE CL-6 Single Swing Gate (BB)	11 Each		
37	TYPE CL-6 Double Swing Gate (BB)	3 Each		
38	Architectural Staining (BB)	72,000 Square Ft.		
39	RCB Culvert at Jackson Avenue (BB)	Lump Sum		
40A	Precast RCB Culvert at Capitol Expwy (BB)	Lump Sum		
40B	Dobern Ramps and Bridge Raising (BB)	Lump Sum	Lump Sum	$100,000
41	Drilled Pier Walls – Retaining and Flood Walls (BB)	21,360 (F) Square Ft.		
42	U-Channel at Jackson Ave. and L-Wall Aprons at Capitol Expwy (BB)	9,760 (F) Square Ft.		

*This form must be completed in **ink** and changes must be **initialed**.*

ITEM NO.	DESCRIPTION OF ITEM	APPROXIMATE QUANTITY / UNIT	UNIT PRICE	TOTAL
43	Access Ramp Slabs and Apron Slabs (BB)	9,480 (F) Square Ft.		
44	Cantilever Retaining Walls at Access Ramps (BB)	6,880 (F) Square Ft.		
45	Soldier Pile Retaining Wall (BB)	36,840 (F) Square Ft.		
46	Channel Lining – North Babb Creek (BB)	210 (F) Square Ft.		
47	Rock Slope Protection (BB)	9,290 (F) Cubic Yd.		
48	Grouted Rock Slope Protection (BB)	285 (F) Cubic Yd.		
49	Slope Toe Protection (BB)	715 (F) Cubic Yd.		
50	Irrigation System (BB)	Lump Sum		
51	Revegetation Hydroseeding (BB)	84,330 Square Ft.		
52	Revegetation Blanket (BB)	84,240 Square Ft.		
53	Revegetation Planting (BB)	52,850 Square Ft.		
54A	Landscape Planting–Vines (BB)	71 Each		
54B	Landscape Planting–Trees in Slope(BB)	26 Each		
54C	Landscape Planting–Trees in Maintenance Rd. (BB)	10 Each		
55	Landscape Creek Boulders (BB)	85 Ton		
56	Revegetation and Landscape Establishment and Maintenance (BB)	84,330 Square Ft.		
SECTION I - TOTAL BASE BID (BB)				

*This form must be completed in **ink** and changes must be **initialed**.*

SECTION II – BID ADDITIVE 1 (BA1)

ITEM NO.	DESCRIPTION OF ITEM	APPROXIMATE QUANTITY / UNIT	UNIT PRICE	TOTAL
57A	Compliance With NPDES General Permit (BA1)	Lump Sum		
57B	Site Review and Monitoring of Project Limits and Vicinity (BA1)	Lump Sum		
57C	Noise and Vibration Monitoring (BA1)	Lump Sum		
57D	Quality Assurance Requirements (BA1)	Lump Sum		
58	Mobilization (BA1)	Lump Sum		
59	Clearing and Grubbing (BA1)	Lump Sum		
60	Concrete Removal (BA1)	Lump Sum		
61	Concrete Structures Removal (BA1)	Lump Sum		
62	Monitoring Well Destruction (BA1)	1 Each		
63	Channel Excavation and Embankment (BA1)	14,900 Cubic Yd.		
64	Aggregate Maintenance Road (BA1)	15,840 (F) Square Ft.		
65	Concrete Maintenance Road (BA1)	1,450 (F) Square Ft.		
66	Decomposed Granite Maintenance Access (BA1)	7,560 (F) Square Ft.		
67	15-Inch CMP Storm Drain (BA1)	10 Linear Ft.		
68	Storm Drain Outfall Modifications (BA1)	Lump Sum		
69	Type CL-3.5 Black Vinyl Coated Fence (BA1)	1,690 Linear Ft.		
70A	Type CL-6 Galvanized Fence (BA1)	1,690 Linear Ft.		

*This form must be completed in **ink** and changes must be **initialed**.*

ITEM NO.	DESCRIPTION OF ITEM	APPROXIMATE QUANTITY / UNIT	UNIT PRICE	TOTAL
70B	Type CL-6 Galvanized Gap Fence (BA1)	154 Linear Ft.		
71	Architectural Staining (BA1)	26,810 Square Ft.		
72	Lyndale Pedestrian Bridge (BA1)	Lump Sum		
73	Soldier Pile Retaining Wall (BA1)	26,335 (F) Square Ft.		
74	Rock Slope Protection (BA1)	2,450 (F) Cubic Yd.		
75	Grouted Rock Slope Protection (BA1)	85 (F) Cubic Yd.		
76	Irrigation System (BA1)	Lump Sum		
77	Revegation Hydroseeding (BA1)	7,900 Square Ft.		
78	Revegetation Blanket (BA1)	7,920 Square Ft.		
79	Revegetation Planting (BA1)	5,440 Square Ft.		
80A	Landscape Planting–Vines (BA1)	54 Each		
80B	Landscape Planting–Trees in Slope (BA1)	4 Each		
80C	Landscape Planting–Trees in Maintenance Rd. (BA1)	9 Each		
81	Landscape Creek Boulders (BA1)	46 Ton		
82	Revegetation and Landscape Establishment and Maintenance (BA1)	7,900 Square Ft.		
SECTION II – TOTAL BID ADDITIVE 1 (BA1)				

BASIS OF AWARD (SECTION I + SECTION II)	
TOTAL BASE BID (BB) + TOTAL BID ADDITIVE 1 (BA1)	

*This form must be completed in **ink** and changes must be **initialed**.*

SECTION III – BID ADDITIVE 2 (BA2)

ITEM NO.	DESCRIPTION OF ITEM	APPROXIMATE QUANTITY / UNIT	UNIT PRICE	TOTAL
83A	Compliance with NPDES General Permit (BA2)	Lump Sum		
83B	Site Review and Monitoring of Project Limits and Vicinity (BA2)	Lump Sum		
83C	Noise and Vibration Monitoring (BA2)	Lump Sum		
83D	Quality Assurance Requirements (BA2)	Lump Sum		
84	Mobilization (BA2)	Lump Sum		
85	Clearing and Grubbing (BA2)	Lump Sum		
86	Concrete Removal (BA2)	Lump Sum		
87	Concrete Structures Removal (BA2)	Lump Sum		
88	Channel Excavation and Embankment (BA2)	21,350 Cubic Yd.		
89	Roadway Restoration – Story Road and Murtha Drive (BA2)	Lump Sum		
90	Concrete Curb, Gutter (BA2)	205 Linear Ft.		
91	Concrete Sidewalk (BA2)	1,425 Square Ft.		
92	Concrete Driveways (BA2)	280 Square Ft.		
93	Aggregate Maintenance Road (BA2)	23,400(F) Square Ft.		
94	Decomposed Granite Maintenance Access (BA2)	12,620 (F) Square Ft.		
95	Storm Drain Outfall Modifications (BA2)	Lump Sum		

*This form must be completed in **ink** and changes must be **initialed**.*

ITEM NO.	DESCRIPTION OF ITEM	APPROXIMATE QUANTITY / UNIT	UNIT PRICE	TOTAL
96	Storm Drain and Sanitary Sewer Manholes (BA2)	1 Each		
97	Traffic Control Story Road (BA2)	Lump Sum		
98	Traffic Control Murtha Drive (BA2)	Lump Sum		
99	Type CL-3.5 Black Vinyl Coated Fence (BA2)	3,530 Linear Ft.		
100	Type CL-6 Black Vinyl Coated Fence (BA2)	65 Linear Ft.		
101A	Type CL-6 Galvanized Fence (BA2)	3,395 Linear Ft.		
101B	Type CL-6 Galvanized Gap Fence (BA2)	2,287 Linear Ft.		
102	Type CL-6 Single Swing Gate (BA2)	5 Each		
103	Type CL-6 Double Swing Gate (BA2)	3 Each		
104	Architectural Staining (BA2)	43,750 Square Ft.		
105	Precast RCB Culvert at Story Road (BA2)	Lump Sum		
106	Drilled Pier Walls – Retaining and Flood Walls (BA2)	7,650 (F) Square Ft.		
107	L-Wall Aprons at Story Road (BA2)	580 (F) Square Ft.		
108	Access Ramp Slabs and Apron Slabs (BA2)	9,060 (F) Square Ft.		
109	Cantilever Retaining Walls at Access Ramps (BA2)	610 (F) Square Ft.		
110	Soldier Pile Retaining Wall (BA2)	24,110 (F) Square Ft.		
111	Rock Slope Protection (BA2)	4,220 (F) Cubic Yd.		
112	Grouted Rock Slope Protection (BA2)	210 (F) Cubic Yd.		

*This form must be completed in **ink** and changes must be **initialed**.*

ITEM NO.	DESCRIPTION OF ITEM	APPROXIMATE QUANTITY / UNIT	UNIT PRICE	TOTAL
113	Irrigation System (BA2)	Lump Sum		
114	Revegetation Hydroseeding (BA2)	38,500 Square Ft.		
115	Revegetation Blanket (BA2)	38,880 Square Ft.		
116	Revegetation Planting (BA2)	35,440 Square Ft.		
117A	Landscape Planting–Vines (BA2)	86 Each		
117B	Landscape Planting–Tree in Slope (BA2)	1 Each		
117C	Landscape Planting–Trees in Maintenance Rd. (BA2)	12 Each		
118	Landscape Creek Boulders (BA2)	45 Ton		
119	Revegetation and Landscape Establishment and Maintenance (BA2)	38,500 Square Ft.		
SECTION III – TOTAL BID ADDITIVE 2 (BA2)				

SECTION IV – BID ADDITIVE 3 (BA3)

120A	Compliance with NPDES General Permit (BA3)	Lump Sum		
120B	Site Review and Monitoring of Project Limits and Vicinity (BA3)	Lump Sum		
120C	Noise and Vibration Monitoring (BA3)	Lump Sum		
120D	Quality Assurance Requirements (BA3)	Lump Sum		
121	Mobilization (BA3)	Lump Sum		

*This form must be completed in **ink** and changes must be **initialed**.*

ITEM NO.	DESCRIPTION OF ITEM	APPROXIMATE QUANTITY / UNIT	UNIT PRICE	TOTAL
122	Clearing and Grubbing (BA3)	Lump Sum		
123	Concrete Removal (BA3)	Lump Sum		
124	Channel Excavation and Embankment (BA3)	22,080 Cubic Yd.		
125	Roadway Restoration – Murtha Drive and Moss Point Drive (BA3)	Lump Sum		
126	Concrete Curb, Gutter (BA3)	145 Linear Ft.		
127	Concrete Sidewalk (BA3)	645 Square Ft.		
128	Concrete Driveways (BA3)	475 Square Ft.		
129	Aggregate Maintenance Road (BA3)	24,320 (F) Square Ft.		
130	Concrete Maintenance Road (BA3)	550 (F) Square Ft.		
131	Decomposed Granite Maintenance Access (BA3)	12,165 (F) Square Ft.		
132	Storm Drain Outfall Modifications (BA3)	Lump Sum		
133	Traffic Control Murtha Dr. (BA3)	Lump Sum		
134	Traffic Control Moss Point Dr. (BA3)	Lump Sum		
135	Type CL-3.5 Black Vinyl Coated Fence (BA3)	3,540 Linear Ft.		
136	Type CL-6 Black Vinyl Coated Fence (BA3)	80 Linear Ft.		
137A	Type CL-6 Galvanized Fence (BA3)	3,540 Linear Ft.		

*This form must be completed in **ink** and changes must be **initialed**.*

ITEM NO.	DESCRIPTION OF ITEM	APPROXIMATE QUANTITY / UNIT	UNIT PRICE	TOTAL
137B	Type CL-6 Galvanized Gap Fence (BA3)	170 Linear Ft.		
138	Type CL-6 Single Swing Gate (BA3)	4 Each		
139	Type CL-6 Double Swing Gate (BA3)	2 Each		
140	Architectural Staining (BA3)	44,550 Square Ft.		
141	Drilled Pier Walls – Retaining and Flood Walls (BA3)	10,290 (F) Square Ft.		
142	Access Ramp Slabs and Apron Slabs (BA3)	5,690 (F) Square Ft.		
143	Cantilever Retaining Walls at Access Ramps (BA3)	4,820 (F) Square Ft.		
144	Soldier Pile Retaining Wall (BA3)	24,335 (F) Square Ft.		
145	Channel Lining – South Babb Creek (BA3)	705 (F) Square Ft.		
146	Rock Slope Protection (BA3)	4,845 (F) Cubic Yd.		
147	Grouted Rock Slope Protection (BA3)	415 (F) Cubic Yd.		
148	Irrigation System (BA3)	Lump Sum		
149	Revegetation Hydroseeding (BA3)	43,420 Square Ft.		
150	Revegetation Blanket (BA3)	43,920 Square Ft.		
151	Revegetation Planting (BA3)	36,540 Square Ft.		
152A	Landscape Planting–Vines (BA3)	84 Each		
152B	Landscape Planting–Tree in Slope (BA3)	4 Each		

*This form must be completed in **ink** and changes must be **initialed**.*

ITEM NO.	DESCRIPTION OF ITEM	APPROXIMATE QUANTITY / UNIT	UNIT PRICE	TOTAL
152C	Landscape Planting–Tree in Maintenance Rd. (BA3)	9 Each		
153	Landscape Creek Boulders (BA3)	51 Ton		
154	Revegetation and Landscape Establishment and Maintenance (BA3)	43,420 Square Ft.		
SECTION IV – TOTAL BID ADDITIVE 3 (BA3)				
			TOTAL BID Total Base Bid plus Additives 1, 2, & 3	

SECTION V

This section must be completed for the Bid to be considered responsive.

See definitions on the next page for assistance. Answering ―Yes" to questions 1 or 2 completes this section. Answering ―No" to question 1 requires questions 2 and 3 be answered.

Completing the table in Section VI is only required when the answer to question 3 is ―Yes".

1. Bid is comprised entirely of Domestic or Designated Countries Construction Material and Manufactured Goods — Yes _____ No _____
2. Bid includes foreign (excluding Designated Countries) Iron, Steel or Manufactured Construction Material — Yes _____ No _____
3. Bid includes foreign (excluding Designated Countries) Unmanufactured Construction Material — Yes _____ No _____

SECTION VI

For the purpose of determining the low Bid, the following adjustments will be made:

1. A 6% markup will be added to the Bidder's stated price of Unmanufactured Construction Material, but only to the cost of the material itself, i.e., no markup on transportation/delivery cost.
2. A markup of 25% of the apparent low Bid will be added to the total price of any Bid when foreign Iron, Steel, or Manufactured Construction Material is utilized in the Bid.

*This form must be completed in **ink** and changes must be **initialed**.*

Unmanufactured Construction Material

Complete this table only if you answered ―Yes" to question 3 in Section V.

Bid Item #	Type of Unmanufactured Construction Material	Total Cost of Material	District Use Only

SECTION VII

Definitions

―Steel" means an alloy that includes at least 50 percent iron between .02 and 2 percent carbon, and may include other elements.

―Manufactured good" means a good brought to the construction site for incorporation into the building or work that has been:

(1) Processed into a specific form and shape; or

(2) Combined with other raw material to create a material that has different properties than the properties of the individual raw materials.

―Recovery Act Designated Countries"

(1) A World Trade Organization Government Procurement Agreement country (Aruba, Austria, Belgium, Bulgaria, Canada, Cyprus, Czech Republic, Denmark, Estonia, Finland, France, Germany, Greece, Hong Kong, Hungary, Iceland, Ireland, Israel, Italy, Japan, Korea (Republic of), Latvia, Liechtenstein, Lithuania, Luxembourg, Malta, Netherlands, Norway, Poland, Portugal, Romania, Singapore, Slovak Republic, Slovenia, Spain, Sweden, Taiwan, and United Kingdom;

(2) Free Trade Agreement (FTA) country (Australia, Bahrain, Canada, Chile, Costa Rica, Dominican Republic, El Salvador, Guatemala, Honduras, Israel, Mexico, Morocco, Nicaragua, Oman, Peru, or Singapore); or

(3) A least developed country (Afghanistan, Angola, Bangladesh, Benin, Bhutan, Burkina Faso, Burundi, Cambodia, Central African Republic, Chad, Comoros, Democratic Republic of Congo, Djibouti, East Timor, Equatorial Guinea, Eritrea, Ethiopia, Gambia, Guinea, Guinea-Bissau, Haiti, Kiribati, Laos, Lesotho, Liberia, Madagascar, Malawi, Maldives, Mali, Mauritania, Mozambique, Nepal, Niger, Rwanda, Samoa, Sao Tome and Principe, Senegal, Sierra Leone, Solomon Islands, Somalia, Tanzania, Togo, Tuvalu, Uganda, Vanuatu, Yemen, or Zambia).

FEDERAL REQUIREMENTS
Designation of Subcontractors

*This form must be completed in **ink** and changes must be **initialed**.*

This Designation of Subcontractors form must be completed in compliance with the State of California Subletting and Subcontracting Fair Practices Act, Public Contract Code **§4100 et seq.**, and any amendment thereof. Bidder must complete the form below for each Subcontract **that exceeds one-half of one percent (½%) of the Bidder's total Bid**. A Subcontractor is one who: (1) performs Work or labor; or (2) provides a service to the Bidder; or (3) specially Fabricates and Installs a portion of the work according to the Contract Documents. Bidders failure to list a Subcontractor for any portion of the work in excess of ½% of Bidder's total Bid signifies Bidder will self perform that portion of the Work with its own forces. (Note: If more than one Subcontractor is designated for the same kind of Work, state the portion that each will perform.) After the opening of the Bids, no changes or substitutions will be allowed except as otherwise provided by law. The listing of more than one subcontractor for each item of work to be performed with the words "and/or" will not be permitted. Failure to comply with this requirement may render the Bid nonresponsive and may cause its rejection.

NAME LOCATION (City & State)	LICENSE NO. EXPIRATION DATE	TYPE OF WORK	% of TOTAL CONTRACT

SIGNATURE BLOCK (Signature Block must be completed in *ink* and changes must be *initialed*.)	
Bidder's Signature:	Date:
Bidder's Name and Title (Print):	

FEDERAL REQUIREMENTS
Noncollusion Affidavit

*This form must be completed in **ink** and changes must be **initialed**.*

TO BE EXECUTED BY BIDDER AND SUBMITTED WITH BID

In accordance with Public Contract Code Section 7106. _____
(Bidder's full name)

declares that he or she is _____
(Bidder's title)

of _____
(Company's name)

the party making the foregoing Bid that the Bid is not made in the interest of, or on behalf of, any disclosed person, partnership, company, association, organization, or corporation; that the Bid is genuine and not collusive or sham; that the Bidder has not directly or indirectly induced or solicited any other Bidder to put in a false or sham bid, and has not directly or indirectly colluded, conspired, connived, or agreed with any Bidder or anyone else to put in a sham bid, or that anyone shall refrain from bidding; that the Bidder has not in any manner, directly or indirectly, sought by agreement, communication, or conference with anyone to fix the Bid price of the Bidder or any other Bidder, or to fix any overhead, profit, or cost element of the Bid price, or of that of any other Bidder, or to secure any advantage against the public body awarding the contract of anyone interested in the proposed contract; that all statements contained in the Bid are true; and, further, that the Bidder has not, directly or indirectly, submitted the Bid price or any breakdown thereof, or the contents thereof, or divulged information or data relative thereto, or paid, and will not pay, any fee to any corporation, partnership, company association, organization, Bid depository, or to any member or agent thereof to effectuate a collusive or sham bid.

I certify (or declare) under penalty of perjury under the laws of the State of California that the foregoing is true and correct.

SIGNATURE BLOCK **(Signature Block must be completed in *ink* and changes must be *initialed*.)**	
Bidder's Signature:	Date:
Bidder's Name and Title (Print):	

*This form must be completed in **ink** and changes must be **initialed**.*

PART I: GENERAL

A. The Santa Clara Valley Water District (District) has a Small Business Outreach Program, which establishes a 30 percent minimum participation goal. To be eligible for award of a Contract, each Bidder must comply with the District's Small Business Outreach Program requirements, be a responsible Bidder, and submit a responsive bid.

To be counted towards meeting the District's Small Business Outreach participation goal, Small/Micro Business must be certified by California Department of General Services. http://www.pd.dgs.ca.gov Bidders are encouraged to use the services and assistance of the California Department of General Services.

B. The District's program applies the following definitions:

1. **Small/Micro Business**—defined by California Code of Regulations Section 1896.12. Eligibility for Certification as a Small Business.

~~a.~~ To be eligible for certification as a small business, a business must meet all of the following qualifying criteria:

1. It is independently owned and operated; and

2. The principal office is located in California; and

3. The officers of the business in the case of a corporation; officers and/or managers, or in the absence of officers and/or managers, all members in the case of a limited liability company; or the owner(s) in all other cases are domiciled in California; and

4. It is not dominant in its field of operation(s), and

5. It is either:

A. A business that, together with affiliates, has 100 or fewer employees, and average annual gross of fourteen million dollars ($14,000,000) or less as averaged for the previous three tax years, as adjusted by the department pursuant to Government Code Section 14837 (d) (3); or

B. A manufacturer as defined herein that, together with affiliates, has 100 or fewer employees.

b. To be eligible for designation as a microbusiness, a business must meet all the qualifying criteria in sub paragraph (a), and in addition, must be either:

1. A business that, together with all affiliates, has annual gross of three million five hundred thousand dollars ($3,500,000) or less receipts as averaged for the previous three tax years, as adjusted

by the department pursuant to Government Code Section 14837 (d) (3); or

2. A manufacturer as defined herein that, together with all affiliates, has 25 or fewer employees."

2. A Small Business **Joint Venture**—is defined in the California Code of Regulations Section 1896.4. Definitions.

~~n~~. means an association of businesses established by written agreement to engage in and carry out a single business venture for joint profit, for which purpose they combine their efforts, property, money, skills and/or knowledge."

1896.12.c. ~~J~~oint ventures must be certified on a bid-by-bid basis. The joint venture shall not be subject to the average annual gross receipts and employee limits imposed by this subchapter. However, each individual business participating in the joint venture must be certified as a small business."

Note: Joint Ventures formed at the prime contractor level are subject to the requirements of Article 3.08 of the Standard Specifications.

PART II: COMPLIANCE WITH SMALL BUSINESS OUTREACH PROGRAM REQUIREMENTS

Each Bidder must complete this Bid Form and return it with the Bid documents.

The undersigned Bidder complies with the District's Small Business Outreach Program as indicated below. At least one box must be checked for the Bid to be considered responsive.

☐ 1. Bidder is qualified for a Small Business preference because it is a Certified Small Business. By 5 p.m. on the 2nd day after Bid opening, provide a copy of the California State Department of General Services notification, which certifies that Bidder is a Small/Micro Business.

☐ 2. Bidder is qualified for a Small Business preference because it has subcontracted:

☐ 30% ☐ 40% ☐ 50% of this job to Certified Small Businesses.

☐ 3. Bidder has made a Good Faith Effort to solicit Small/Micro Business participation as demonstrated by documentation to be submitted by 5 p.m. on the 2nd day after Bid opening. Submission of documentation is only required from the firms submitting the three apparent low bids (see Part IV for documentation requirements).

☐ 4. Bidder will perform all the work without using subcontractors and is, therefore, exempt from demonstrating Good Faith Effort.

*This form must be completed in **ink** and changes must be **initialed**.*

PART III: CALCULATING THE SMALL BUSINESS PREFERENCE

A. Bidders receive a preference based on the following criteria:

1. Certified Small/Micro Business Bidders receive a 5 percent preference.

2. Non-Small/Micro Business Bidders with Small/Micro Business participation of:

- 30% to 39% receive a 3% preference.
- 40% to 49% receive a 4% preference.
- 50% to 100% receive a 5% preference.

B. For purposes of calculating the Small Business preference, only the base Bid amount (which excludes Supplemental and Additive/Deductive Bid Items) will be used.

The preference is calculated by subtracting the appropriate percent (3%, 4%, or 5%) of the low Base Bid from the qualifying firm's Total Bid.

Example:

Apparent low Bid, not a small business (Base Bid + BA1)	$600,000	Small/Micro Business Bid	$615,000
Total of Additive 1 (BA1)	-$40,000	5% Small Business Preference*	-$28,000
Base Bid	$560,000	New apparent low bid	$587,000

*Small Business preference amount: $560,000 x .05 = $28,000

C. The preference is only applied to determine the low bid. The priority for applying the preference will be in the following order:

1. Micro Business submitting the lowest bid.

2. Small Business submitting the lowest bid.

3. Non-Small Business, subcontracting with the highest percent of Micro Business submitting the lowest bid.

4. Non-Small Business subcontracting with the highest percent of Small Business submitting the lowest bid.

PART IV: REQUIREMENTS FOR DEMONSTRATING GOOD FAITH EFFORT

Bidders not meeting the minimum participation goal of 30 percent must submit documentation demonstrating that a Good Faith Effort was made. For further information and/or assistance, contact the Capital Program Planning and Analysis Unit Manager at (408) 265-2607, extension 2682.

No substitution of a Small/Micro Business listed on the Affidavit will be made at any time without the written consent of the District. Substitution requests will only be considered for the reasons stated in Public Contract Code §4107. If a Small/Micro Business subcontractor/supplier substitution is requested, the Contractor must make a Good Faith Effort to replace the original

firm with another Small Business subcontractor/supplier. Written documentation of such efforts must accompany each substitution request.

A. The Bidder(s) submitting the three apparent low bids must provide documentation of Good Faith Effort by 5 p.m. on the 2nd day after the Bid opening.

B. The District strongly recommends compliance with all 8 items listed below.

C. All documentation must be specific with verifiable names, addresses, phone numbers, dates, etc., to demonstrate that the Bidder made a Good Faith Effort to obtain Small Business participation in accordance with the criteria listed below and prior to the time bids are opened.

1. Attend any pre-bid meeting conducted by the District, for any project, where Bidders are informed of Small Business program requirements held within the previous 6 months prior to the Bid opening.

2. Efforts made to select portions of the work proposed to be performed by small businesses in order to increase the likelihood of achieving the participation goal (including, where appropriate, breaking down contracts into economically feasible units to facilitate Small Business participation).

3. Advertise, not less than 10 calendar days before the date bids are due, in one or more daily or weekly general circulation media, trade association publications, minority or trade oriented publications, trade journals, or minority/women focused media, soliciting bids from subcontractors/suppliers/vendors for participation in the project.

4. Written documentation that the Bidder contacted a reasonable number of DGS-certified Small Businesses to solicit interest for a specific portion(s) of the project in sufficient time to allow the Small Businesses to obtain information on the project and consider bidding on work, which is to be performed by other than the prime contractor.

   Verbal solicitations will be accepted, provided they are followed by written communication confirming the offer to Bid and are specific as to names, scope of work, etc.

5. Follow up initial solicitations of interest by contacting the Small Business to determine with certainty if they are interested in performing specific items of the project.

6. Efforts made to provide interested small businesses with adequate information about the plans, specifications, and requirements of the project.

*This form must be completed in **ink** and changes must be **initialed**.*

7. Efforts made to negotiate in good faith with interested Small Businesses and not rejecting Small Businesses as unqualified without sound reasons. Provide a list of all Small Businesses submitting a Bid that was not used stating the reason for rejection.

8. Efforts made to assist interested Small Businesses in securing bonding, lines of credit, or insurance. This may include referral to local agencies specifically set up for this purpose.

PART V: SMALL/MICRO BUSINESS ENTERPRISE UTILIZATION REPORTING REQUIREMENT

Contractor payments to Small/Micro Business Enterprise (SBE) providing labor, services, materials, equipment, or supplies, including subcontractors, will be monitored monthly throughout the project. The Contractor is required to submit a monthly and final SBE Utilization Report with the request for progress payments. Forms and instructions can be downloaded from the District's website at www.valleywater.org/Programs/Construction.aspx. Sample forms and instructions are included in Appendix A of the Specifications.

*This form must be completed in **ink** and changes must be **initialed**.*

AFFIDAVIT
(Small/Micro Business Subcontractor List)

The Bidder must complete this Affidavit listing the names of each Certified Small/Micro Business, at any tier, providing labor, services, materials, equipment, or supplies including subcontractors.

Contingent upon award of a Contract for **Lower Silver Creek Flood Protection and Creek Restoration Project Interstate 680 to Moss Point Drive (Reaches 4, 5 & 6A).**

_____ will contract with the following small/micro firms:
(Name of Contractor)

	NAME AND ADDRESS	LICENSE NO.	TYPE OF WORK	AMOUNT OF SUBCONTRACT/ PURCHASE
1.				
2.				
3.				
4.				
5.				

Small/Micro Business participation in this Contract is $_____ or _____% of the total bid.

I declare, under penalty of perjury, that the above information is true and correct.

SIGNATURE BLOCK (Signature Block must be completed in *ink* and changes must be *initialed.*)	
Bidder's Signature:	Date:
Bidder's Name and Title (Print):	

FEDERAL REQUIREMENTS:
Bidder's Bond

*This form must be completed in **ink** and changes must be **initialed**.*

BE IT KNOWN BY THESE PRESENTS,

That we, _____, as PRINCIPAL,
and _____, as SURETY,

are held and firmly bound unto the Santa Clara Valley Water District, hereinafter called the District, in the penal sum of TEN PERCENT (10%) OF THE TOTAL AMOUNT OF THE PROPOSAL of the Principal above named, submitted by said Principal to the Santa Clara Valley Water District, for the work described below, for the payment of which sum is lawful money of the United States, well and truly to be made, we bind ourselves, our heirs, executors, administrators and successors, jointly and severally, firmly by these presents. In no case shall the liability of the surety hereunder exceed the sum of $_____.

THE CONDITION OF THIS OBLIGATION IS SUCH,

That whereas the Principal has submitted the above mentioned Proposal to the District, for certain construction specifically described as follows, for which Proposals are to be opened at San Jose, California, on _____, 20_____, for **Lower Silver Creek Flood Protection and Creek Restoration Project Interstate 680 to Moss Point Drive (Reaches 4, 5 & 6A).**

NOW, THEREFORE, if the aforesaid Principal is awarded the Contract and, within the time and manner required under the Specifications, after the prescribed forms are presented to him for signature, enters into a written contract, in the prescribed form, in accordance with the Proposal, and files the two bonds with the District, one to guarantee faithful performance and the other to guarantee payment for labor and materials, as required by law, then this obligation shall be null and void; otherwise, it shall be and remain in full force and virtue.

In the event suit is brought upon this bond by the obligee and judgment is recovered, the surety shall pay all costs incurred by the obligee in such suit, including a reasonable attorney's fee to be fixed by the court.

IN WITNESS WHEREOF, we have hereunto set our hands and seal on the _____ day of _____, 20_____

PRINCIPAL:	**SURETY**:
_____	_____
Signature	Signature
_____	_____
Name	Name (Seal)
_____	_____
Title	Title
_____	_____
Address	Address

NOTE: Signature of those executing for Surety must be properly acknowledged.

Bidder's Statement of Qualifications for Revegetation Subcontractor

The apparent low bidder shall, within two working days after bid opening, submit a completed copy of this Statement, wherein the apparent low bidder submits qualifications and experience in performing revegetation work or, alternatively, the qualifications and experience of the specialty revegetation subcontractor that is proposed. The subject entity will be referred to, in this statement, as "Revegetation Subcontractor" though the apparent low bidder may be qualified and may propose to do the revegetation work. In such case, the subject qualification would be for the apparent low bidder. Failure to comply with this requirement may render the Bid nonresponsive and may result in its rejection. Supplemental sheets may be included as required to provide information.

The Revegetation Subcontractor is the contractor that will implement at a minimum the work required in Section 41 of the Specifications.

The Revegetation Subcontractor shall possess a C-27 specialty license, a California pesticide applicator license and applicators business license. The Revegetation Subcontractor and the Foreman and/or Supervisor(s) assigned to the project shall have completed a minimum of three (3) representative revegetation projects (representative projects) within the last five (5) years. These projects must be located within the nine (9) counties that comprise the San Francisco Bay Area, be a minimum five (5) acres in size, and with a minimum contract amount of $100,000 for each representative project.

The Contractor shall submit to the Engineer, at least 30 working days prior to the start of the revegetation work, the name and qualifications of the Foreman and/or Supervisor(s) proposed to be assigned to the project. The Contractor shall not change any supervisorial personnel without prior written approval from the Engineer. The District shall have the right ot accept or reject changes in the Foreman and/or supervisorial personnel.

Contractor shall provide proper identification at all times for contractor's landscape maintenance vehicles and labor force.

For the purposes of this Statement a representative revegetation project is defined as any landscaping project using 100 percent site-specific California native plants, designed to function as natural habitat, and included a plant maintenance requirement.

Bidder's Statement of Qualifications for Revegetation Subcontractor

1. **For each Representative Project, provide the project name, county, acreage, dollar amount, project start date, completion date, maintenance period, client company or agency name and the client contact's name and phone number for a phone interview.**

Project No. 1:

Project Name: _____
Acreage: _____
Dollar Amount: _____
Project Start Date: _____
Project Completion Date: _____
Maintenance Period: _____
Client: _____
Client Contact Name: _____
Client Contact Tel. No.: _____

Project No. 2:

Project Name: _____
Acreage: _____
Dollar Amount: _____
Project Start Date: _____
Project Completion Date: _____
Maintenance Period: _____
Client: _____
Client Contact Name: _____
Client Contact Tel. No.: _____

Project No. 3:

Project Name: _____
Acreage: _____
Dollar Amount: _____
Project Start Date: _____
Project Completion Date: _____
Maintenance Period: _____
Client: _____
Client Contact Name: _____
Client Contact Tel. No.: _____

2. **For each Representative Project, provide vegetation community type; total number of plants installed; percent direct seeds, direct cutting or container stock; and percent trees, shrubs/vines, and herbs; and the revegetation success criteria and the percent achieved.**

Project No. 1:

Vegetation Community Type: _____

Total # of plants initially installed: _____

Percent of direct seed, direct cuttings or container stock: _____

Percent trees, shrubs/vines and herbs: _____

Revegetation Success Criteria required and percent achieved: _____

Project No. 2:

Vegetation Community Type: _____

Total # of plants initially installed: _____

Percent of direct seed, direct cuttings or container stock: _____

Percent trees, shrubs/vines and herbs: _____

Revegetation Success Criteria required and percent achieved: _____

Project No. 3:

Vegetation Community Type: _____

Total # of plants initially installed: _____

Percent of direct seed, direct cuttings or container stock: _____

Percent trees, shrubs/vines and herbs: _____

Revegetation Success Criteria required and percent achieved: _____

3. **In order to determine if the Revegetation Subcontractor has the salient experience for this project, they must have performed a minimum of 10 of the following 13 tasks. Indicate in the space provided which of these tasks have been performed by the Revegetation Subcontractor and indicate when each of the Representative Projects included the item:**

A. Seed and cutting collection, preparation, and pre-plant storage.

Yes_____ No _____ If yes, which Representative Project(s) _____

B. Native plant installation using container stock, direct seeding recruitment. or direct cutting installation.

Yes_____ No _____ If yes, which Representative Project(s) _____

C. Soil preparation methodologies, both broad scale and at individual

Yes_____ No _____ If yes, which Representative Project(s) _____

D. Plant protection methodology for deer, dog, bird, rodent, and rabbit exclusion

Yes_____ No _____ If yes, which Representative Project(s) _____

E. Irrigation system design and installation for drip, flood bubbler, laser line, overhead spray, etc. using various water sources including domestic and recycled

Yes_____ No _____ If yes, which Representative Project(s) _____

F. Sequential minimization of irrigation scheduling to match plant demand and promote establishment.

Yes_____ No _____ If yes, which Representative Project(s) _____

G. Transplanting existing trees, shrubs, and herbs.

Yes_____ No _____ If yes, which Representative Project(s) _____

H. Erosion control seeding hydraulically or by hand, including straw blowing.

Yes_____ No _____ If yes, which Representative Project(s) _____

I. Exotic plant species control and eradication including trees, shrubs, and vines.

Yes_____ No _____ If yes, which Representative Project(s) _____

J. Routine and alternative weed control methodologies for selective control of target plants, which co-exist with planted or volunteer natives. (Ability to identify native versus weed species)

Yes_____ No _____ If yes, which Representative Project(s) _____

K. High quality habitat development strategies using species mosaics & canopy stratification.

Yes_____ No _____ If yes, which Representative Project(s) _____

L. Monitoring of stratified vegetative cover, seedling recruitment, and/or mortality percentages.

Yes_____No _____ If yes, which Representative Project(s) _____

M. Biotechnical stream bank erosion repair or protection.

Yes_____No _____ If yes, which Representative Project(s) _____

4. **Names and titles of all officers of Revegetation Subcontractor:**

_____

_____

_____

_____

5. **Name of person or persons who inspected site of proposed revegetation work for the Revegetation Subcontractor prior to bidding.**

_____

_____

_____

_____

6. **The Revegetation Subcontractor has never been disqualified, removed, or otherwise prevented from bidding, working on or completing federal, state, or local government projects, except as follows:**

_____

_____

_____

_____

7. **Claims and suits involving the Revegetation Subcontractor. (If the answer to any of question below is "yes," please submit a detailed explanation.)**

   A. Are there any judgments, claims, arbitration proceedings or suits pending or outstanding against your organization or its officers?

   Yes_____ No _____

   B. Has your organization filed any lawsuits or requested arbitration with regard to construction contracts within the last five (5) years?

   Yes_____ No _____

   C. Has your organization ever failed to complete any work awarded to it?

   Yes_____ No _____

Bidder's Statement of Qualifications for Revegetation Subcontractor

DISTRICT RESERVES THE RIGHT TO VERIFY THE ABOVE INFORMATION

I STATE UNDER THE PENALTY OF PERJURY TIIAT EACH AND ALL OF THE STATEMENTS I HAVE MADE ABOVE ARE TRUE TO THE BEST OF MY KNOWLEDGE.

Date: _____

Revegetation Subcontractor Name: _____

Revegetation Subcontractor Address: _____

Revegetation Subcontractor Phone Number: _____

Authorized Signature:_____

Signer's Name (print): _____

Signers Title (print): _____

License Classifications(s): _____

Expiration Date(s): _____

FEDERAL REQUIREMENTS

Certification Regarding Use of Contract Funds for Lobbying

*This form must be completed in **ink** and changes must be **initialed**.*

I, _____, hereby certify on

behalf of _____ that;

(1) No Federal appropriated funds have been paid or will be paid, by or on behalf of the undersigned, to any person for influencing or attempting to influence an officer or employee of any agency, a Member of Congress, an officer or employee of Congress, or an employee of a Member of Congress in connection with the awarding of any Federal contract, the making of any federal grant, the making of any Federal loan, the entering into of any cooperative agreement, and the extension, continuation, renewal, amendment, or modification of any Federal contract, grant, loan, or cooperative agreement.

(2) If any funds other than federal appropriated funds have been paid or will be paid to any person for influencing or attempting to influence an officer or employee of any agency, a Member of Congress, an officer or employee of Congress, or an employee of a Member of Congress in connection with this Federal contract, grant, loan, or cooperative agreement, the undersigned shall complete and submit Standard Form-LLL –Disclosure of Lobbying Activities" (See Appendix B) in accordance with its instructions.

(3) The undersigned shall require that the language of this certification be included in the award documents for all subawards at all tiers (including subcontracts, subgrants, and contracts under grants, loans, and cooperative agreements) and that all subrecipients shall certify and disclose accordingly.

This certification is a material representation of fact upon which reliance is placed when this transaction was made or entered into. Submission of this certification is a prerequisite for making or entering into this transaction imposed by the provisions of Title 31 U.S. Code Section 1352. Any person who fails to file the required certification shall be subject to a civil penalty of not less than $10,000 and not more than $100,000 for each such failure.

SIGNATURE BLOCK (Signature Block must be completed in *ink* and changes must be *initialed.*)	
Bidder's Signature:	Date:
Bidder's Name and Title (Print):	

FEDERAL REQUIREMENTS
Equal Opportunity Requirements

*This form must be completed in **ink** and changes must be **initialed**.*

In connection with the performance of Work under this Contract, the Contractor agrees as follows:

1. The Santa Clara Valley Water District (District) is an equal opportunity employer. Contractor shall comply with all applicable federal, state, and local laws and regulations including District's equal opportunity requirements. Such laws include but are not limited to the following:

   - Title VI and VII of the Civil Rights Act of 1964 as amended;
   - Americans with Disabilities Act of 1990;
   - The Rehabilitation Act of 1973 (sections 503 and 504);
   - Vietnam ERA Veterans' Readjustments Act of 1974;
   - California Fair Employment and Housing Act (Government Code Sections 12900 et seq.);
   - California Labor Code Sections 1101 and 1102.

Contractor shall not discriminate against any Subcontractor, employee, or applicant for employment because of age, race, color, national origin, ancestry, religion, sex/gender, sexual orientation, mental disability, physical disability, medical condition, political beliefs, organizational affiliations, or marital status in the recruitment, selection for training including apprenticeship, hiring, employment, utilization, promotion, layoff, rates of pay or other forms of compensation. The Contractor agrees to post in conspicuous places, available to employees and applicants for employment, notices to be provided by the awarding authority setting forth these requirements.

2. The Contractor herein certifies that:

   Paragraph 1 set forth above shall be included in all subcontracts.

   The Contractor shall notify all employees and all sources of employee referrals (including unions, employment agencies, advertisements, department of employment) of the required compliance with Paragraph 1 above.

The undersigned, in submitting a Bid Proposal for performing the following Work by Contract, hereby certifies that it will comply with the Equal Opportunity Requirements.

SIGNATURE BLOCK (Signature Block must be completed in *ink* and changes must be *initialed*.)	
Bidder's Signature:	Date:
Bidder's Name and Title (Print):	

*This form must be completed in **ink** and changes must be **initialed**.*

52.222-23 Notice of Requirement for Affirmative Action to Ensure Equal Employment Opportunity for Construction (FEB 1999)

(a) The offeror's attention is called to the Equal Opportunity clause and the Affirmative Action Compliance Requirements for Construction clause of this solicitation.

(b) The goals for minority and female participation, expressed in percentage terms for the Contractor's aggregate workforce in each trade on all construction work in the covered area, are as follows:

Goals for Minority Participation for Each Trade	Goals for Female Participation for Each Trade
19.6%	**6.9%**

These goals are applicable to all the Contractor's construction work performed in the covered area. If the Contractor performs construction work in a geographical area located outside of the covered area, the Contractor shall apply the goals established for the geographical area where the work is actually performed. Goals are published periodically in the *Federal Register* in notice form, and these notices may be obtained from any Office of Federal Contract Compliance Programs office.

(c) The Contractor's compliance with Executive Order 11246, as amended, and the regulations in 41 CFR 60-4 shall be based on (1) its implementation of the Equal Opportunity clause; (2) specific affirmative action obligations required by the clause entitled -Affirmative Action Compliance Requirements for Construction," and (3) its efforts to meet the goals. The hours of minority and female employment and training must be substantially uniform throughout the length of the contract, and in each trade. The Contractor shall make a good faith effort to employ minorities and women evenly on each of its projects. The transfer of minority or female employees or trainees from Contractor to Contractor, or from project to project, for the sole purpose of meeting the Contractor's goals shall be a violation of the contract. Executive Order 11246, as amended, and the regulations in 41 CFR 60-4. Compliance with the goals will be measured against the total work hours performed.

(d) The Contractor shall provide written notification to the Deputy Assistant Secretary for Federal Contract Compliance, U.S. Department of Labor, within 10 working days following award of any construction subcontract in excess of $10,000 at any tier for construction work under the contract resulting from this solicitation. The notification shall list the:

(1) Name, address, and telephone number of the subcontractor;
(2) Employer's identification number of the subcontractor;
(3) Estimated dollar amount of the subcontract;
(4) Estimated starting and completion dates of the subcontract; and
(5) Geographical area in which the subcontract is to be performed.

(e) As used in this Notice, and in any contract resulting from this solicitation, the -covered area" is Santa Clara County, California.

NOTE: 41 CFR 60-4.2 requires that the above notice shall be included in, and shall be a part of, all solicitations for offers and bids on all federally assisted construction contracts or subcontracts in excess of $10,000.

*This form must be completed in **ink** and changes must be **initialed**.*

Executive Order 11246; Code of Federal Regulations Title 41, Chapter 60, Parts 60-1 et seq.

A. Filing of Standard Form 100 (EEO-I) (Regulation 60-1.7)

Your company, if having 50 or more employees and a nonexempt prime contract or subcontract at the first tier for more than $10,000 (including an open-end agreement for indefinite quantities which is anticipated to exceed $10,000 within a period of one year) is required to file the Employer Information Report, EEO-1 (Standard Form 100). Your company must file all reports required to be submitted to the Secretary of Labor's Joint Reporting Committee, the Deputy Assistant Secretary or the Equal Employment Opportunity Commission all reports due under the applicable filing requirements. (Regulation 60-1.5, 60-1.7.)

.

1. Have you, in accordance with Regulation 60-1.7, filed an EEO-1within the last 12-months?

❑ Yes ❑ No

a. If your answer is YES, when was it filed? _____

b. If your answer is NO, please check the appropriate reason(s) for not filing:

❑ 1. Your company is exempt in accordance with Regulation 60-1.5; or (If exempt, explain basis for claimed exemption

_____

_____

❑ 2. Your company has less than 50 employees; or

❑ 3. Your company is not a prime contractor or first-tier subcontractor, as defined in these regulations; or

❑ 4. Your company does not have a contract, subcontract, or purchase order amounting to $50,000 or more, does not serve as a depository of Government funds in any amount, and is not a financial institution acting as an issuing and paying agent for U.S. Savings Bonds and Savings Notes.

NOTE: Each person required by § 60-1.7(a)(1) to submit reports shall file such report with the contracting or administering agency within 30 days after the award to him of a contractor subcontract, unless such person has submitted such a report within 12 months preceding the date of the award. Subsequent reports shall be

*This form must be completed in **ink** and changes must be **initialed**.*

submitted annually in accordance with § 60-1.7(a)(1), or at such intervals as the Deputy Assistant Secretary may require. The Deputy Assistant Secretary may extend the time for filing any report.

B. Adoption of Written Affirmative Action Program (Regulation 60-1.40)

Your company, if having 50 or more employees and meeting any one of the following: (a)holding a nonexempt contract or subcontract at any tier amounting to $50,000 or more, or(b) having Government bills of lading which in any 12-month period, total or can reasonably be expected to total $50,000 or more; or (c) serving as a depository of government funds in any amount; or (d) being a financial institution which is an issuing or paying agent for U.S. Savings Bonds and Savings Notes in any amount; is required to develop and maintain a written affirmative action program for each of your establishments.

1. Does your company have a written, up-do-date affirmative action program for each of your establishments?

❑ Yes ❑ No ❑ N/A

2. If your answer is NO, please identify your exemption or other reason.

_____

_____

SIGNATURE BLOCK (Signature Block must be completed in *ink* and changes must be *initialed.*)	
Name of Company:	
By:	Date:
Title:	

FEDERAL REQUIREMENTS

Certification Regarding Debarment and Suspension

*This form must be completed in **ink** and changes must be **initialed**.*

In accordance with Title 7 Code of Federal Regulations, Part 3017, the Bidder certifies that, except as noted below, he/she or any person associated therewith in the capacity of owner, partner, director, officer, and manager:

a. You are not presently debarred, suspended, proposed for debarment, declared ineligible, or voluntarily excluded by any Federal department or agency;

b. Have not within a three-year period preceding this proposal been convicted of or had a civil judgment rendered against them for commission of fraud or a criminal offense in connection with obtaining, attempting to obtain, or performing a public (Federal, State, or local) transaction or contract under a public transaction; violation of Federal or State antitrust statutes or commission of embezzlement, theft, forgery, bribery, falsification or destruction of records, making false statements, or receiving stolen property;

c. Are not presently indicted for or otherwise criminally or civilly charged by a governmental entity (Federal, State, or local) with commission of any of the offenses enumerated in paragraph (1) (b) of this certification; and

d. Have not within a three-year period preceding this application/proposal had one or more public transactions (Federal, State, or local) terminated for cause or default.

If there are any exceptions to this certification, insert the exceptions in the following space.

_____

_____

_____

Exceptions will not necessarily result in denial of award, but will be considered in determining Bidder's responsibility. For any exception noted above, indicate below to whom it applies, initiating agency, and dates of action.

_____

_____

_____

I declare under the penalty of perjury under the laws of the State of California that the foregoing is true and correct.

SIGNATURE BLOCK (Signature Block must be completed in *ink* and changes must be *initialed*.)	
Bidder's Signature::	Date:
Bidder's Name and Title (Print):	

NOTES:

- Providing false information may result in criminal prosecution or administrative sanctions.
- If this Affidavit is signed outside of the State of California, a notarized acknowledgement is required.

FEDERAL REQUIREMENTS

Certification of Nonsegregated Facilities

*This form must be completed in **ink** and changes must be **initialed**.*

(Applicable to federally assisted construction contracts and related sub-contracts exceeding $10,000 which are not exempt from the Equal Opportunity clause.)

The federally assisted construction contractor certifies that he does not maintain or provide for his employees any segregated facilities at any of his establishments, and that he does not permit his employees to perform their services at any location, under his control, where segregated facilities are maintained. The federally assisted construction contractor certifies further that he will not maintain or provide for his employees any segregated facilities at any of his establishments, and that he will not permit his employees to perform their services at any location, under his control, where segregated facilities are maintained. The federally assisted construction contractor agrees that a breach of this certification is a violation or the Equal Opportunity clause in this contract.

As used in this certification, the term ~~-~~segregated facilities" means any waiting rooms, work areas, restrooms and washrooms, restaurants and other eating areas, time clocks, locker rooms and other storage or dressing areas, parking lots, drinking fountains, recreation or entertainment areas, transportation, and housing facilities provided for employees which are segregated by explicit directive or are in fact segregated on the basis of race, color, religion, or national origin, because of habit, local custom, or otherwise.

The federally assisted construction contractor agrees that (except where he has obtained identical certifications from proposed subcontractors for specific time periods) he will obtain identical certifications from proposed subcontractors prior to the award of subcontracts exceeding $10,000 which are not exempt from the provisions of the Equal Opportunity clause, and that he will retain such certifications in his files.

NOTE: The penalty for making false statements in offers is prescribed in 18 U.S.C. 1001.

SIGNATURE BLOCK **(Signature Block must be completed in *ink* and changes must be *initialed*.)**	
Bidder's Signature:	Date:
Bidder's Name and Title (Print):	

FEDERAL REQUIREMENTS
Bidder's General Information

*This form must be completed in **ink** and changes must be **initialed**.*

The Bidders submitting the three (3) apparent low Bids must complete and submit this Bid Form 7, including the required attachments. **The Bidder may be considered not responsible based on information provided on this form**. Additional sheets may be attached as required.

1. Number of years as a contractor in construction work of this type: _____

2. Names and titles of all officers of Bidder's firm:

   _____

   _____

   _____

   _____

3. Name of person(s) who inspected site of proposed work for your firm:

   Name: _____ Date of Inspection: _____

   _____ _____

4. Name, address, and telephone number of surety company and agent who will provide the required bonds on this contract:

   _____

   _____

   _____

5. Resume of Designated Authorized Representative: Attach the résumé of the person who will be designated as authorized representative. **The Contractor's authorized representative must have requisite background and experience to administer and oversee the work on behalf of the Contractor. The representative must have complete authority to represent and act for the Contractor as stated in Article 9.04 of the Standard Provisions**.

6. Prior Construction Contracts: Provide details of all construction contracts similar in scope and complexity to this project that your organization has performed during the last 5 years. Use the *PRIOR CONSTRUCTION CONTRACTS* form (page 3 of this document) for each project.

7. Claims and Suits if the answer to any of the questions below is yes, explain the circumstances on an attached sheet.

   7.1 Has your organization ever failed to complete an awarded contract?

   ☐ Yes ☐ No

   7.2 Are there any judgments, claims, alternate dispute resolution proceedings or suits pending or outstanding against your organization or its officers?

   ☐ Yes ☐ No

*This form must be completed in **ink** and changes must be **initialed**.*

7.3 Has your organization filed any lawsuits or requested an alternate dispute resolution with regard to construction contracts within the last 5 years?

☐ Yes ☐ No

8. The Bidder hereby declares that the Bidder has not been convicted, within the preceding 3 years, of any charge of fraud, bribery, collusion, conspiracy, or any other act in violation of any state or federal antitrust law in connection with the bidding upon, award of, or performance of any public work contract with any public entity. The term "Bidder" is understood to include any partner, member, officer, director, responsible managing officer, or responsible managing employee thereof.

9. Has the Bidder, any officer of the Bidder, or any employee of the Bidder who has a proprietary interest in the Bidder, ever been disqualified, removed or otherwise prevented from bidding on, or completing a federal, state, or local government project because of a violation of law or a safety regulation?

☐ Yes ☐ No

If the answer is "yes," explain the circumstances in the following space:

_____

_____

_____

10. The Bidder signing for Contractor certifies that neither Bidder nor its principals is presently debarred, suspended, proposed for debarment, declared ineligible, or voluntarily excluded from participation in this transaction by any federal department or agency.

District reserves the right to verify the above information.

I STATE UNDER PENALTY OF PERJURY THAT EACH AND ALL OF THE STATEMENTS I HAVE MADE IN RESPONSE TO PARAGRAPHS 8, 9 & 10 ABOVE ARE TRUE AND CORRECT.

SIGNATURE BLOCK (Signature Block must be completed in *ink* and changes must be *initialed.*)	
Bidder's Signature:	Date:
Bidder's Name and Title (Print):	

*This form must be completed in **ink** and changes must be **initialed**.*

PRIOR CONSTRUCTION CONTRACTS

The Bidder may make as many copies of this page as necessary.

Respond to each item, indicating "none" where appropriate.

A. Name, address, and telephone number of owner: _____

B. Name of project: _____

C. Location of project: _____

D. Brief description of the work involved: _____

_____

E. Contract amount: _____

F. Claims amount: _____

G. Liquidated damages assessed: _____

H. Date of completion of contract: _____

I. Name, address, and telephone number of design firm's architect or engineer:

_____

J. Name of owner's project manager: _____

K. Declaration of Default (Yes or No): _____

L. Litigation on questions of project performance: _____

M. Determination of failure to pay prevailing wages or other state and/or federally required taxes or contributions: _____

_____

N. Citations by federal OSHA or CAL OSHA: _____

_____

District reserves the right to verify the above information.

SIGNATURE BLOCK (Signature Block must be completed in *ink* and changes must be *initialed*.)	
Bidder's Signature:	Date:
Bidder's Name and Title (Print):	

Small Business Outreach Program: Requirements for Demonstrating a Good Faith Effort

*This form must be completed in **ink** and changes must be **initialed**.*

The documentation must demonstrate that the Bidder made a Good Faith Effort to obtain certified Small/Micro Business participation. The District strongly recommends compliance with all 8 items listed below.

- Good Faith Effort must occur prior to the Bid opening.
- Documentation must be specific with verifiable names, addresses, phone numbers, dates, and other pertinent information.
- Documentation must be in accordance with the criteria listed below.

Check all that apply and attach documentation.

☐ 1. Attended any pre-bid meeting conducted by the District, for any project, where bidders were informed of Small Business program requirements held within the previous 6 months prior to the Bid opening.

☐ 2. Efforts were made to select portions of the work proposed to be performed by Small Businesses in order to increase the likelihood of achieving the participation goal (including, where appropriate, breaking down contracts into economically feasible units to facilitate Small Business participation).

☐ 3. Advertised not less than ten (10) calendar days before the date bids are due, in one or more daily or weekly general circulation media, trade association publications, minority or trade oriented publications, trade journals, or minority/women focused media, soliciting bids from subcontractors/suppliers/vendors for participation in the project.

☐ 4. Written documentation showing that the Bidder contacted a reasonable number of DGS-certified Small Businesses to solicit interest for a specific portion(s) of the project in sufficient time to allow the Small Businesses to obtain information on the project and consider bidding on work, which is to be performed by other than the prime contractor.

(Verbal solicitations will be accepted, provided they are followed by written communication confirming the offer to Bid and are specific as to names, scope of work, etc.)

☐ 5. Followed up initial solicitations of interest by contacting the Small Business to determine with certainty if they were interested in performing specific items of the project.

☐ 6. Efforts were made to provide interested Small Businesses with adequate information about the plans, specifications, and requirements of the project.

☐ 7. Efforts were made to negotiate in good faith with interested Small Businesses and not rejecting Small Businesses as unqualified without sound reasons. Provided a list of all Small Businesses submitting a Bid that were not used stating the reason for rejection.

☐ 8. Efforts were made to assist interested Small Businesses in securing bonding, lines of credit, or insurance. This may include referral to local agencies specifically set up for this purpose.

We have made a Good Faith Effort by complying with the requirements checked above.

SIGNATURE BLOCK (Signature Block must be completed in *ink* and changes must be *initialed*.)	
Bidder's Signature:	Date:
Bidder's Name and Title (Print):	

Sample Advertisement—Small Business Outreach

-----SAMPLE-----

Advertisement in general circulation media, trade association publications,
minority Chamber of Commerce, and minority/women focus media.

****

[COMPANY NAME]
Requests sub-bids from qualified California Department of General Services (DGS)
certified small businesses and micro businesses.

Subcontractors and supplies for the following project:
[PROJECT NAME]
[TYPE OF JOB]
OWNER: SANTA CLARA VALLEY WATER DISTRICT
BID DATE: [DATE, TIME]
DGS certified small businesses and microbusinesses wanted for the following items, including, but not limited to, [piping/fittings/valves, welded steel pipe, cathodic protection, pipe supports, electrical and instrumentation.]

Bonding, insurance, lines of credit and any technical assistance or information related to the plans or specification and requirements for the work will be made available to interested DGS certified small and micro business suppliers and subcontractors. Assistance with obtaining necessary equipment, supplies, materials, or related assistance or services for this project will also be offered to interested DGS certified small and micro business suppliers and subcontractors.

Plans available for viewing at:
[COMPANY NAME, ADDRESS, & CONTACT NAME AND NUMBER]

AN EQUAL OPPORTUNITY EMPLOYER *CA LIC. NO. [XXXXXX]*

****

SPECIFICATIONS AND CONTRACT DOCUMENTS

for the construction of

LOWER SILVER CREEK

FLOOD PROTECTION & CREEK RESTORATION PROJECT
REACHES 4, 5, and 6A

Interstate 680 to Moss Point Drive
San Jose, CA

Project No. 40264008

May 28, 2010

Santa Clara Valley Water District

Page left intentionally blank

Santa Clara Valley Water District

SPECIFICATIONS AND CONTRACT DOCUMENTS

for the construction of

LOWER SILVER CREEK
FLOOD PROTECTION & CREEK RESTORATION PROJECT
REACHES 4, 5, and 6A

Interstate 680 to Moss Point Drive

Project No. 40264008

Special and Technical Provisions Prepared by:

Arminta J. Jensen 5-28-10

Arminta J. Jensen, P.E. Date
Principal-in-Charge
Ruggeri-Jensen-Azar & Associates

Approval and Standard Provisions by:

Katherine Oven 6/4/2010

Katherine Oven Date
Deputy Operating Officer
Watershed Capital Division

REGISTERED PROFESSIONAL ENGINEER ARMINTA JO JENSEN No. 42321 Exp. 3-31-12 CIVIL STATE OF CALIFORNIA

REGISTERED PROFESSIONAL ENGINEER KATHERINE M. OVEN No. C 50381 EXP. 6-30-11 STATE OF CALIFORNIA

Accepted by:

Liang Lee
Deputy Operating Officer
Coyote & Pajaro Watersheds Division

NRCS Natural Resources Conservation Service

NRCS Approval Letter is on File

DISTRICT BOARD OF DIRECTORS

ROSEMARY C. Kamel	District 1	Patrick Kwok	District 5
Joe Judge	District 2	Tony Estremera	At Large (North)
Richard P. Santos (Chair)	District 3	Cy Mann	At Large (South)
Larry Wilson	District 4		

Page left intentionally blank

TABLE OF CONTENTS

Page

STANDARD PROVISIONS

SECTION 1. DEFINITIONS 1-1

SECTION 2. INTERPRETATION OF CONTRACT 2-1
- 2.01. Precedence of Contract 2-1
- 2.02. Clarification of Contract 2-1
- 2.03. State Specifications and Plans 2-2

SECTION 3. PROPOSAL REQUIREMENTS AND CONDITIONS 3-1
- 3.01. Approximate Estimate 3-1
- 3.02. Examination of Drawings, Specifications, and Site of Work 3-1
- 3.03. Proposal Form 3-2
- 3.04. Queries on Bidding 3-2
- 3.05. Rejection of Proposals 3-2
- 3.06. Proposal Guarantee 3-3
- 3.07. Withdrawal of Proposals 3-3
- 3.08. Joint Proposals 3-3
- 3.09. Disqualification of Bidders 3-3
- 3.10. Addendum 3-4
- 3.11. Guaranty 3-4
- 3.12. Bid Protest 3-4

SECTION 4. AWARD OF CONTRACT 4-1
- 4.01. Award of Contract 4-1
- 4.02. Return of Bidder Security 4-1
- 4.03. Contract Bonds 4-1
- 4.04. Execution of Contract 4-1
- 4.05. Failure to Execute Contract 4-2

SECTION 5. SCOPE OF WORK 5-1
- 5.01. Work to be Done 5-1

TABLE OF CONTENTS

5.02. Final Cleanup 5-1
5.03. Change in Work 5-1
5.03.01. Allowable Quantity Variations 5-2
5.04. Change in Contract Price 5-3
5.04.01. General 5-3
5.04.02. Cost of Work (Based on Time and Materials) 5-4
5.04.03. Special Services 5-8
5.04.04. Contractor's Fee 5-8
5.04.05. Compensation for Time Extensions 5-9
5.05. Change of Contract Time 5-9
5.05.01. General 5-9
5.05.02. Extensions of Time for Delay Due to Excusable Inclement Weather 5-10
5.06. Changed Site Conditions 5-11
5.07. Cost Reduction Incentive 5-12
5.08. Disputes 5-12
5.08.01. Protest 5-12
5.08.02. Notice of Potential Claims 5-12
5.09. Claims 5-13
5.09.01. Claims Less Than Fifty Thousand Dollars 5-14
5.09.02. Claims From Fifty Thousand Dollars to Three Hundred and Seventy-Five Thousand Dollars 5-14
5.09.03. Informal Conferences 5-15
5.09.04. Civil Actions 5-15
5.10. Dispute Review Board (DRB) 5-16
5.10.01. General 5-16
5.10.02. DRB Qualifications 5-17
5.10.03. Establishment of the DRB 5-18
5.10.04. DRB Meetings 5-19
5.10.05. Dispute Resolution 5-19
5.11. Escrow Bid Documents 5-25
5.11.01. Introduction 5-25
5.11.02. Purpose 5-26
5.11.03. Format and Contents 5-26

5.11.04. Submittal 5-27
5.11.05. Storage 5-28
5.11.06. Examination 5-28
5.11.07. Final Deposition 5-29
5.12. Partnering 5-29
5.12.01. Partnering Relationship 5-29
5.12.02. Implementation 5-29
5.13. Dust Control 5-30
5.14. Excavation Safety Plans 5-30
5.15. Asbestos-Related Work 5-30
5.16. Substitutions 5-31

SECTION 6. LEGAL RELATIONS AND RESPONSIBILITY 6-1
6.01. Laws to be Observed 6-1
6.02. Equal Opportunity Requirements 6-1
6.03. Employment of Labor 6-1
6.04. Prevailing Wages 6-1
6.05. Hours of Labor 6-3
6.06. Apprentices 6-3
6.07. Permits and Licenses 6-4
6.08. Patents and Copyrights 6-4
6.09. Public Safety 6-5
6.10. Accident Prevention 6-5
6.11. Explosives and Stream Pollution 6-6
6.12. Fires 6-6
6.13. Interference With Fire Hydrants, Highways, and Fences 6-6
6.14. Preservation of Property 6-6
6.15. Contractor’s Responsibility for Work 6-7
6.16. Indemnification 6-7
6.17. Contractor’s Insurance 6-7
6.17.01. General 6-7
6.17.02. Insurance on Work and Materials 6-8
6.18. Payment of Taxes 6-8

6.19. Cooperation With Others 6-8
6.20. Property Rights in Materials 6-9
6.21. Rights in Land and Improvements 6-9
6.22. Title to Materials Found on the Work 6-9
6.23. Trespass 6-9
6.24. Subcontracting 6-9
6.25. Tunnel Construction Safety 6-10
6.26. Assignment of Antitrust Claims 6-10
6.27. Burial Sites 6-10
6.28. Delay Due to Archeological Discovery 6-10
6.29. Noise Pollution and Vibration 6-11
6.30. Air Pollution 6-12
6.31. Spillage and Dust 6-12
6.32. Traffic Control 6-14
6.33. Water Quality 6-15
6.34. Regulated Material Management 6-16
6.35. Non-Regulated Materials 6-18
6.36. Imported Earthfill Material 6-19
6.37. Migratory Birds, Other Wildlife and Fish Species 6-20
6.38. Good Neighbor Requirements 6-20

SECTION 7. PROSECUTION AND PROGRESS OF WORK 7-1
7.01. Assignment 7-1
7.02. Notice to Begin Work 7-1
7.03. Commencement of Work 7-1
7.04. Work Progress Schedule 7-1
7.05. Temporary Suspension of Work 7-2
7.06. Liquidated Damages 7-2
7.07. Termination of Control 7-2
7.08. Termination of Contract 7-2
7.09. Contractor's Cost Data 7-3
7.10. Coordination With Utilities 7-3

TABLE OF CONTENTS

SECTION 8. MEASUREMENT AND PAYMENT 8-1
8.01. Measurement of Quantities 8-1
8.02. Deductions From Payments 8-1
8.03. Progress Payment 8-1
8.04. Final Payment 8-3
8.05. Scope of Payment 8-4
8.06. Acceptance of Final Payment Constitutes Release 8-4
8.07. Small/Micro Business Enterprise Utilization Reporting Requirement 8-4

SECTION 9. CONROL OF WORK 9-1
9.01. Authority of Engineer 9-1
9.02. Submittals to be Furnished by the Contractor 9-1
9.02.01 Submittal Requirements 9-2
9.02.02. Submittal Review Procedures 9-4
9.03. Drawings and Data to be Furnished by the District 9-6
9.04. Superintendence 9-6
9.05. Character of Workers 9-6
9.06. Layout of Work and Surveys 9-6
9.07. Inspection 9-7
9.08. Defective and Unauthorized Works 9-8
9.09. Construction Equipment and Plant 9-9
9.10. Final Inspection and Acceptance of Work 9-9
9.11. Use Prior to Acceptance 9-9

SECTION 10. CONTROL OF MATERIALS AND INSTALLED EQUIPMENT 10-1
10.01. Furnishing and Quality of Materials and Equipment 10-1
10.02. Source of Materials and Equipment 10-1
10.03. Product Data and Samples 10-1
10.04. Storage of Materials and Equipment 10-1
10.05. Defective Materials 10-2
10.06. Equal, Sole or Single Source, and Substitution 10-2
10.07. Testing Materials 10-4

10.08. Plant Inspection 10-5
10.09. District-Furnished Materials 10-5

SPECIAL PROVISIONS

SECTION 11. WORK AND SCHEDULE OF WORK
11.01. Summary of Work 11-1
11.02. Drawings 11-2
11.03. Site Maintenance and Cleanup 11-2
11.04. Time Allowance for Completion of Work 11-2
11.05. Excusable Inclement Weather Delays 11-5
11.06. Schedule of Work 11-6
11.07. Liquidated Damages 11-10
11.08. Submittals and Withholding of Partial Payment 11-11
11.09. Fines 11-11
11.10. Payment 11-12

SECTION 12. GENERAL REQUIREMENTS
12.01. Abbreviations and Acronyms 12-1
12.02. Definition of Key Terms 12-5
12.03. Site Investigation 12-5
12.04. District-Furnished Reports 12-5
12.05. Contractor's Engineering and Design 12-8
12.06. Payment 12-9

SECTION 13. SPECIAL REQUIREMENTS
13.01. Engineer 13-1
13.02. Project Signs 13-1
13.03. Office Facilities 13-2
13.04. Use of District Facilities 13-7
13.05. Temporary Utilities 13-7
13.06. Staging Area 13-9

13.07. District Furnished Materials and Equipment 13-9
13.08. Salvaged Materials and Equipment 13-10
13.09. NOT USED 13-10
13.10. NOT USED 13-10
13.11. Maintenance of Record Documents 13-10
13.12. Emergency Work 13-12
13.13. Dispute Review Board - **Bid Item No. 1B** 13-12
13.14. Escrow Bid Documents 13-13
13.15. Partnering 13-14
13.16. Insurance 13-14
13.17. Environmental Protection Training 13-17
13.18. Payment 13-18

SECTION 14. GENERAL COORDINATION
14.01. Meeting Requirements 14-1
14.02. Integration and Coordination With District Operations 14-2
14.03. Coordination of Work Activities 14-3
14.04. Construction Survey 14-4
14.05. Public Notification 14-7
14.06. Payment 14-7

SECTION 15. WORK CONSTRAINTS AND SITE RESTRICTIONS
15.01 General Work Constraints 15-1
15.02. Utilities 15-1
15.02.03 Utility Installation/Relocation 15-3
B.18. Building Service Modifications at Capitol Expwy. - **Bid Item No. 1E** 15-12
15.03. Protection of Existing Improvements 15-18
15.04. Site Review and Monitoring of Project Limits and Vicinity - **Bid Item Nos. 1C, 57B, 83B, 120B** 15-19
15.05. Rights of Way 15-33
15.06. Access to Properties Owned by Others 15-34
15.07. Access to Job Site 15-35
15.08. Access Roads Within Job Site 15-36

15.09. District Use of Facilities/Premises Within the Work Area 15-36
15.10. Payment 15-36

SECTION 16. SAFETY AND SECURITY
16.01. Safety 16-1
16.02. Safety and Health Program 16-3
16.03. Security Requirements at Job Site 16-7
16.04. Payment 16-8

SECTION 17. PERMITS AND REGULATIONS
17.01. Permits and Agreements and Regulations 17-1
17.02. Hours of Work 17-2
17.03. Noise Pollution and Vibration - **Bid Item Nos. 1D, 57C, 83C, 120C** 17-3
17.04. Air Pollution 17-9
17.05. Spillage and Dust 17-9
17.06. Traffic Control 17-9
17.07. Truck Traffic and Hauling 17-10
17.08. Parking 17-11
17.09. Discovery of Archeological Artifacts and Human Remains 17-12
17.10. NOT USED 17-12
17.11. NOT USED 17-12
17.12. Utilities and Service System 17-12
17.13. Payment 17-12

SECTION 18. ENVIRONMENTAL
18.01. Compliance with NPDES General Permit -
Bid Item Nos. 1A, 57A, 83A, 120A 18-1
18.02. NOT USED 18-6
18.03. NOT USED 18-6
18.04. Water Pollution Nuisance 18-6
18.05. Regulated Material Management 18-6
18.06. Solid Materials Management 18-6
18.07. Migratory Birds 18-8

18.08. Other Wildlife and Fish Species 18-14
18.09. Payment 18-15

SECTION 19. QUALITY ASSURANCE REQUIREMENTS - **Bid Item Nos. 1F, 57D, 83D, 120D**
19.01. Submittal Procedures 19-1
19.02. Quality Control 19-4
19.03. Product Requirements 19-13
19.04. Payment 19-16

SECTION 20. PAYMENT PROCEDURES
20.01. Schedule of Bid Items 20-1
20.02. Progress Payments and Schedule of Values 20-1
20.03. Cost Summaries 20-3
20.04. Partial Payment – Inclusion of Materials On-Site 20-3
20.05. Applications for Payment 20-4
20.06. Payment 20-5

SECTION 21. CONTRACT CLOSEOUT
21.01. Project Completion and Acceptance 21-1
21.02. Guaranty and Guaranty Bond 21-5
21.03. NOT USED 21-9
21.04. Testing and Facility Startup 21-9
21.05. Submission of Closeout Items 21-10
21.06. Final Cleaning 21-12
21.07. Payment 21-12

TECHNICAL PROVISIONS

SECTION 22. PREPARATORY WORK 22-1
22.01. Mobilization - **Bid Item Nos. 2, 58, 84, 121** 22-1
22.02. Clearing and Grubbing – **Bid Item Nos. 3, 59, 85, 122** 22-2
22.03. Demolition and Disposal 22-8

TABLE OF CONTENTS

22.03.01 Concrete Removal – **Bid Item Nos. 4, 60, 86, 123** 22-8
22.03.02. Concrete Structures Removal – **Bid Item Nos. 5, 61, 87** 22-9
22.03.03. Asphalt Paving Removal 22-13
22.03.04. Abandon, Removal, Salvage, Relocation of Existing Facilities 22-14
22.03.05 Fence and Gate Removal and/or Salvage 22-17
22.03.06 Monitoring Well Destructions – **Bid Item Nos. 6, 62** 22-18
22.04. Control of Water 22-22
22.04.01 Control of Water within Existing Course 22-22
22.04.02 Temporary Water Diversion 22-23
22.05 Erosion Control – Temporary Silt Fence and Fiber Roll 22-26
22.06. Erosion Control – Hydroseeding – **Bid Item No. 7** 22-34
22.07. Erosion Control Blanket – **Bid Item No. 8** 22.38

SECTION 23. EARTHWORK 23-1
23.01. Channel Excavation and Embankment – **Bid Item Nos. 9, 63, 88, 124** 23-1
23.01.01 Channel Excavation 23-1
23.01.02 Channel Embankment 23-5
23.02. Trench Excavation 23-9
23.03. Trench Backfill 23-11
23.04. Structural Excavation 23-12
23.05. Structural Backfill 23-14
23.06. Unsuitable Materials 23-16
23.07. Permeable Material 23-18
23.08. Geotextile Fabric 23-20
23.09. Structural Drainage 23-22
23.10 Shoring 23-23

SECTION 24. NOT USED

SECTION 25. SURFACINGS AND PAVEMENTS 25-1
25.01. Asphalt Concrete 25-1
25.02. Roadway Restoration – **Bid Item Nos. 10, 89, 125** 25-4

25.03. Curb, Gutter, Sidewalk and Driveway Restoration – **Bid Item Nos. 11, 12, 13, 90, 91, 126, 127, 128** 25-7
25.04. Aggregate Maintenance Road – **Bid Item Nos. 14, 64, 93, 129** 25-9
25.05. Concrete Maintenance Road – **Bid Item Nos. 15, 65, 130** 25-11
25.06. Decomposed Granite Maint. Access – **Bid Item Nos. 16, 66, 94, 131** 25-13

SECTION 26. SITE UTILITIES 26-1
26.01. Storm Drain 26-1
26.01.01 RCP Storm Drain 26-1
26.01.02 CMP Storm Drain – **Bid Item Nos. 17, 18, 67** 26-3
26.01.03 Storm Drain Outfall Modifications – **Bid Item Nos. 19, 68, 95, 132** 26-5
26.01.04 Storm Drain and Sanitary Sewer Manholes - **Bid Item Nos. 20, 96** 26-7
26.02. Sanitary Sewer 26-10
26.02.01 VCP Sanitary Sewer Main – **Bid Item Nos. 21, 22, 23, 24** 26-10
26.02.02 DIP Sanitary Sewer Main – **Bid Item Nos. 25, 26** 26-12
26.02.03 PVC Pipe and Penrod Place PVC Storm Structure - **Bid Item No. 27** 26-15
26.02.04 Sanitary Sewer Siphon – Bore and Jack – **Bid Item No. 28** 26-17
26.02.05 Sanitary Sewer Siphon – Open Cut – **Bid Item No. 29** 26-19

SECTION 27. TRAFFIC CONTROL 27-1
27.01. Traffic Control – **Bid Item Nos. 30, 31, 97, 98, 133, 134** 27-1

SECTION 28. FENCING AND GATES 28-1
28.01. NOT USED 28-1
28.02. Type CL-3.5 and CL-6 Chain Link Fence and Galvanized Gap Fence - **Bid Item Nos. 32, 33, 34A, 34B, 69, 70A, 70B, 99, 100, 101A, 101B, 135, 136, 137A, 137B** 28-1
28.03. Wood Privacy Fence – **Bid Item No. 35** 28-3
28.04. Temporary Fence 28-4
28.05. NOT USED 28-5
28.06. Single and Double Swing Gates - **Bid Item Nos. 36, 37, 102, 103, 138, 139** 28-6

TABLE OF CONTENTS

SECTION 29. CONCRETE 29-1
29.01. Structural Concrete 29-1
29.02. Lean Concrete 29-4
29.03. Air-Blown Mortar – Shotcrete 29-5
29.04. Joints, Water Stops and Sealants 29-10
29.05. Formwork and Falsework 29-11
29.06 Architectural Finish 29-12
29.06.01 Architectural Staining – **Bid Item Nos. 38, 71, 104, 140** 29-12
29.06.02 Architectural Texturing 29-14
29.07. Non-Shrink Grout 29-17

SECTION 30. SPECIAL CONCRETE STRUCTURES 30-1
30.01. RCB Culverts at Jackson Avenue – **Bid Item No. 39** 30-1
30.02. Precast RCB Culvert at Capitol Expressway – **Bid Item No. 40A** ... 30-3
30.03. Precast RCB Culvert at Story Road – **Bid Item No. 105** 30-7
30.04. Pedestrian Bridge Replacement – Concrete Abutments 30-10
30.05. Lyndale Pedestrian Bridge Replacement – **Bid Item No. 72** 30-12
30.06. Dobern Ramps and Bridge Raising – **Bid Item No. 40B** 30-24
30.07. Drilled Pier Walls – Retaining and Flood Walls – **Bid Item Nos. 41, 106, 141** 30-25
30.08. U-Channel at Jackson Avenue & L-Wall Aprons at Capitol Expressway And Story Road - **Bid Item Nos. 42, 107** 30-29
30.09. Access Ramp, Slabs, and Apron Slabs – **Bid Item Nos. 43, 108, 142** 30-31
30.10. Cantilever Retaining Wall at Access Ramps – **Bid Item Nos. 44, 109, 143** 30-33
30.11. Soldier Pile Retaining Walls – **Bid Item Nos. 45, 73, 110, 144** 30-36
30.12. Cast-in-Drilled-Hole Concrete Piles 30-40
30.13. Sanitary Sewer Siphon Manholes 30-59
30.14. Lyndale Pedestrian Bridge Ramp 30-60
30.15. Channel Lining – North Babb Creek – **Bid Item No. 46** 30-62
30.16. Channel Lining – South Babb Creek – **Bid Item No. 145** 30-64
30.17. North Babb Grated Box 30-66

TABLE OF CONTENTS

SECTION 31. SLOPE PROTECTION.....31-1
31.01. Rock Slope Protection – **Bid Item Nos. 47, 74, 111, 146** 31-1
31.02. Grouted Rock Slope Protection – **Bid Item Nos. 48, 75, 112, 147** .31-3
31.03. Slope Toe Protection – **Bid Item No. 49** 31-5
31.04. Lateral Grade Control Structures.....31-7

SECTIONS 32 THROUGH 40 NOT USED 32:40-1

SECTION 41. LANDSCAPING AND REVEGETATION.....41-1
41.01. General.....41-1
41.02. Irrigation Systems – **Bid Item Nos. 50, 76, 113, 148** 41-2
41.03. Ball Valve 41-9
41.04. Reduced Pressure Backflow Preventer 41-10
41.05. Irrigation Controller 41-11
41.06. Irrigation Main Line 41-12
41.07. Irrigation Lateral, Bubbler and Emitter System 41-13
41.08. Record Drawings, Irrigation 41-14
41.09. Revegetation Soil Preparation.....41-16
41.10. Revegetation Hydroseeding – **Bid Item Nos. 51, 77, 114, 149**.....41-19
41.11. Revegetation Blanket – **Bid Item Nos. 52, 78, 115, 150**.....41-22
41.12. Augering 41-24
41.13. Soil Scarification.....41-25
41.14. Revegetation Planting – **Bid Item Nos. 53, 79, 116, 151**.....41-26
41.15. Planting Basins.....41-33
41.16. Plug Planting 41-34
41.17. Dee-Pot Container Planting.....41-35
41.18. Tree-Pot Container Planting 41-36
41.19. Treeband Container Planting.....41-37
41.20. Landscape Planting - **Bid Item Nos. 54A, 54B, 54C, 80A, 80B, 80C, 117A, 117B, 117C, 152A, 152B, 152C**.....41-39
41.21. Mulch (Landscape Compost) – See Article 41.14 Reveg. Planting41-43
41.22. Landscape Creek Boulders – **Bid Item Nos. 55, 81, 118, 153** 41-43

41.23. Revegetation & Landscape Establishment Maintenance – **Bid Item Nos. 56, 82, 119, 154** 41-46
41.24. Irrigation Systems Maintenance 41-58
41.25. Weed Control 41-62
41.26. Insect, Pest & Rodent Control 41-66
41.27. Revegetation Hydroseed and Blanket – Post Installation 41-68

APPENDIX A
Agreement
Payment Bond
Performance Bond
Instructions for Completing SBE Utilization Report
Sample Small/Micro Business Enterprises Utilization Report
Escrow Agreement
Three-Party Agreement for DRB

APPENDIX B
Federal Requirements (ARRA)

APPENDIX C
NPDES General Permit
U.S. Army Corps of Engineers Permit
RWQCB 401 Water Quality Certification and Discharge
California Dept. of Fish and Game 1601 Streambed Alteration Agreement
City of San Jose Encroachment Permit
Santa Clara County Encroachment Permit
Caltrans Encroachment Permit
Migratory Bid Permits Memorandum

APPENDIX D
Best Management Practices Incorporated Into Lower Silver Creek Reaches 4-6A

APPENDIX E
Sample Copy of SCVWD Well Abandonment and Removal Permit
Solid Materials Management Report Form

APPENDIX F
Contractor Biologist Qualifications
LSC Drawing Sheet List

APPENDIX G
SCVWD – Control of Oversight of Pesticide Use
SCVWD – Guidelines for As-Built Markups

STANDARD PROVISIONS

Page left intentionally blank

STANDARD PROVISIONS

SECTION 1. DEFINITIONS

Whenever in these Specifications and other Contract documents the following abbreviations and terms or pronouns in place of them are used, the intent and meaning shall be interpreted as follows:

ABBREVIATIONS

AASHTO	American Association of State Highway and Transportation Officials
ACI	American Concrete Institute
AISI	American Iron and Steel Institute
AIEE	American Institute of Electrical Engineers
AISC	American Institute of Steel Construction
ANSI	American National Standards Institute
API	American Petroleum Institute
AREA	American Railway Engineering Association
ASCE	American Society of Civil Engineers
ASHRAE	American Society of Heating, Refrigerating and Air Conditioning Engineers
ASME	American Society of Mechanical Engineers
ASTM	American Society of Testing and Materials
AWG	American Wire Gage
AWPA	American Wood-Preservers' Association
AWS	American Welding Society
AWWA	American Water Works Association
BAAQMD	Bay Area Air Quality Management District
CAEPA	California Environmental Protection Agency
CCR	California Code of Regulations
CFR	Code of Federal Regulations
CIH	Certified Industrial Hygienist
CWA	Federal Clean Water Act
DHS	California Department of Health Services
HSC	California Health and Safety Code
IEEE	Institute of Electrical and Electronics Engineers
MSDS	Material Safety Data Sheet
NEC	National Electric Code
NEMA	National Electrical Manufacturers Association
NFPA	National Fire Protection Association
NPDES	National Pollution Discharge Elimination System
RWQCB	California Regional Water Quality Control Board
SAE	Society of Automotive Engineers
SWRCB	California State Water Resources Control Board
UBC	Uniform Building Code
UL	Underwriters Laboratories
USEPA	United States Environmental Protection Agency
WCLB	West Coast Lumber Inspection Bureau
WWPA	Western Wood Products Association

Acceptance: The formal written acceptance by the District of a contract which has been completed in all respects in accordance with the Drawings and Specifications and any modifications thereof previously approved.

Addendum: A change in the Specifications or Drawings issued prior to the opening of Proposals.

Approved, Directed, Ordered, or Required: Whenever these words or their derivatives are used, it is the intent, unless otherwise clearly stated, that approval or direction by the Engineer is indicated.

Article: A numbered portion of a title section of the Specifications.

Bid: See Proposal, Article 3.03

Bidder: Any individual, firm, partnership, corporation, or combination thereof, submitting a proposal for the work contemplated, acting directly or through a duly authorized representative.

Board, Board of Directors: The Board of Directors of the District.

Certified Hazardous Materials Testing Laboratory: A laboratory certified by the California Department of Health Services to perform specific chemical and physical analysis for hazardous materials.

Certified Industrial Hygienist: A professional who is certified by the American Board of Industrial Hygienists as trained to evaluate safety and health hazards and determine safety measures necessary for personnel working under hazardous conditions.

Claim: A separate demand by the Contractor for (A) a time extension, (B) payment of money or damages arising from work done by or on behalf of Contractor pursuant to the Contract and payment of which is not otherwise expressly provided for or the Contractor is not otherwise entitled to, or (C) an amount of payment which is disputed by the District.

Code: The terms Government Code, Labor Code, etc. refer to codes of the State of California.

Construction Equipment: Equipment used for the performance of work but not incorporated into the project.

Contract: The written agreement between Contractor and District including the Notice to Bidders, Proposals, Drawings, Specifications, Contract Bonds, Contract change orders, and Addenda.

Contract Prices: The prices for the work set forth in a contract.

Contractor: The entity or person entering a contract with the District.

Controlling Item of Work: Any feature or combination of features of the work considered at the time by the Engineer, which if delayed, will delay the time of completion of a contract.

Days: Calendar days, unless otherwise designated.

***Designated Engineer**:* A Deputy Operating Officer of the District as identified in Article 13.01 of the Special Provisions.

District: The Santa Clara Valley Water District.

Drawings: The official drawings, working drawings, detail drawings, and supplemental drawings, or reproductions thereof, which show the location, character, dimensions, and details of the work to be done, and which are to be considered as part of a contract.

Engineer: The Designated Engineer, acting either directly, or through a properly designated representative, assumes all duties and responsibilities, and has all rights and authority, in accordance with the Contract Documents.

Equipment: Equipment incorporated or to be incorporated into the project.

Fixed Costs: Any necessary labor, material, and equipment costs directly expended on the item or items under consideration which remain constant regardless of the quantity of work done.

Hazardous Material: (A) Any substance, product, waste or other material of any nature whatsoever which is or becomes listed, regulated, or addressed pursuant to any federal, state or local statute, law, ordinance, resolution, code, rule, regulation, order or decree regulating, relating to, or imposing liability (including, but not limited to response, removal, and remediation costs) or standards of conduct or performance concerning any hazardous, toxic, explosive, corrosive, flammable, infectious, radioactive, carcinogenic, mutagenic or as otherwise dangerous waste, substance or material; (B) any substance, product, waste, or other material of any nature whatsoever whose presence in and of itself may give rise to liability under any of the above statutes or under any statutory or common law theory based on negligence, trespass, intentional tort, nuisance, strict or absolute liability or under any reported decisions of a state or federal court; (C) any substance without limitation, which contains petroleum or crude oil, including but not limited to, petroleum and petroleum products.

Hazardous Waste: Any substance or material, as defined in the California Hazardous Waste Control Act, Health and Safety Code Section 25, or the Resource Conservation and Recovery Act, 42 U.S.C. 6901 et seq.

Liquidated Damages: The amount stated in the Specifications, as provided in Government Code Section 53069.85, to be paid to the District or to be deducted from any payments due or to become due the Contractor for each day's delay in completing the whole or any specified portion of the work beyond the time allowed in the Specifications.

Materials: Materials incorporated or to be incorporated into the project.

Milestone: A specified portion of the work identified in the Contract as a Milestone.

Milestone Completion: The date determined by the District when the Milestone is complete. Milestone Completion does not constitute Acceptance but does establish the completion date of the Milestone for the purpose of assessment of Liquidated Damages, if any, associated with the Milestone.

Personnel Protection: Equipment and procedures which minimize human exposure to regulated materials, hazardous materials, hazardous wastes, or unsafe situations.

Plans, Construction Plans: The Drawings.

Project: The erection, construction, alteration, repair, or improvement to be accomplished under the Contract.

Project Completion: Project Completion is the stage at which the whole Work is complete per the Contract documents, and the Engineer has performed the final inspection and issued a Project Completion letter.

Reasonable Accuracy: Within the tolerances as shown on the Drawings or indicated in the Specifications.

Regulated Material: Any substance or combination of substances for which federal, state, or local regulations require special management, storage, disposal, or handling practices. This shall include, but not be limited to, materials defined as: Hazardous Materials and Waste; Designated Wastes (CCR, Title 23, Section 23-2522); and Special Waste (CCR, Title 22, Section 22-66195).

Remediation: Restoration of the contaminated soil, groundwater, or other materials to its pre-contaminated level or to a level acceptable to the District and local, state, and federal agencies.

Responsible Bidder: A bidder meeting the criteria set forth in District's Resolution No. 88-11.

Subcontractor: An entity or person contracting with the Contractor or another subcontractor to perform any portion of work.

Specifications: The directions, provisions, and requirements contained in the Standard Provisions, Special Provisions, and Technical Provisions.

Ton: 2,000 pounds avoirdupois.

Work: That which is constructed or done pursuant to the requirements of the Contract to accomplish the Project including, but not limited to, providing labor, materials, equipment, and information documentation.

SECTION 2. INTERPRETATION OF CONTRACT

2.01. Precedence of Contract

A. In resolving conflicting requirements between the Contract Documents order of precedence shall be as follows:

1. Change orders
2. Agreement
3. Addenda
4. Special Provisions
5. Technical Provisions
6. Drawings
7. Standard Provisions
8. State Specifications

B. With reference to the Drawings:

1. Figures govern over scaled dimensions
2. Detail drawings govern over general drawings

2.02. Clarification of Contract

A. All corrections of readily apparent errors or omissions in the Contract may be made by the Engineer when such corrections are necessary for the proper fulfillment of their intention as construed by the Engineer. The misplacement, addition, or omission of any word, letter, figure, or punctuation mark which has no substantive legal effect will in no way change the due spirit, intent, or meaning of these Specifications.

B. Any part of the work not shown on the Drawings or described in these Specifications but which is reasonably or ordinarily implied by either, shall be furnished and installed by the Contractor as if fully described in these Specifications and shown upon the Drawings.

C. Should it appear that the work to be done or any of the matters relative thereto is not sufficiently detailed or explained in the Specifications or on the Drawings, or if the Contractor discovers during the course of the work any discrepancies between the Contract Drawings and conditions in the field, or any errors or omissions in the Contract or in the layout given by stakes, points, or instructions, the bidder or Contractor shall apply in writing to the Engineer for such further explanations as may be necessary and shall conform to them as part of the Contract. In the event of any doubt or questions arising respecting the true

meaning of the Contract, reference shall be made in writing to the Engineer, whose decision thereon shall be final. Any work done after such discovery until authorized by the Engineer, will be done at the Contractor's risk.

2.03. State Specifications and Plans

A. Unless otherwise stated, State Specifications and Plans referred to in these Specifications shall be the latest edition of the State of California Department of Transportation Standard Specifications and Standard Plans. When specifically stated to follow the State Specifications and Plans for an item, the work set forth in these Contract documents shall be accomplished in accordance with the appropriate provisions and details of the State Standard Specifications and Standard Plans. Said Specifications and Plans are herein referred to as the State Specifications and Plans and are by reference made a part of these Specifications the same as though set out in full, as to the provisions requiring compliance. In the event of conflict between the State Standard Specifications or the State Standard Plans and the Standard, Special, or Technical Provisions of these Specifications or the Drawings, these Specifications and Drawings shall apply.

SECTION 3. PROPOSAL REQUIREMENTS AND CONDITIONS

3.01. Approximate Estimate

A. The quantities given in the Notice to Bidders, Proposal, and Contract forms are approximate only, being given as a basis for the comparison of Proposals, and the District does not, expressly or by implication, agree that the actual amount of work will correspond therewith, but reserves the right to increase or decrease the amount of any class or portion of the work, or to omit portions of the work, as may be deemed necessary or advisable by the Engineer.

3.02. Examination of Drawings, Specifications, and Site of Work

A. The bidder shall examine carefully the site of the work contemplated and the Proposal, Drawings, Specifications, and Contract forms therefor. The submission of a Proposal will be conclusive evidence that the bidder has investigated and is fully aware of the conditions and difficulties to be encountered, of the character, quality, and quantities of work to be performed and materials to be furnished, and of the requirements of the Proposal, Drawings, Specifications, and other Contract documents.

B. Where investigation of subsurface conditions has been made by the District in respect to foundation, characterization of soils, groundwater, or other design, bidders may inspect the records of the District as to such investigation, including examination of samples and drill cores, if any. When logs of test boring showing a record of the data obtained by the District's investigation of subsurface conditions are made available, said logs represent only the opinion of the District as to the character of material encountered by it in its test borings and are made available only for the convenience of bidders.

C. Note that the District investigation of subsurface conditions is made for the purpose of design. The District assumes no responsibility whatever in respect to the sufficiency of test borings, or accuracy of the log of test borings, or other preliminary investigations, or of the interpretation thereof. There is no guarantee expressed or implied that the conditions indicated are representative of those existing throughout the work, or any part of it, or that unforeseen developments may not occur.

D. Making such information available to bidders is not to be construed in any way as a waiver of the provisions of Article 3.02, and bidders must satisfy themselves through their own investigations, analysis, and interpretations as to conditions to be encountered.

E. No information derived from such inspection of records or preliminary investigations made by the District, or from the Engineer, or from assistants, or from the maps, Specifications, profiles, or Drawings will in any way relieve the Contractor from any risk or from properly fulfilling all the terms of the Contract. Records of such preliminary investigations as may have been made by the District may be inspected at the office of the District, 5750 Almaden Expressway,

San Jose, California 95118, or at such other locations as may be stated in the Notice to Bidders.

3.03. Proposal Form

A. The Proposal Form, when filled out by the Bidder and executed, shall be submitted as the Bidder's Proposal. All Proposals shall show the prices proposed in figures in the spaces provided, and shall be signed by the Bidder. The Bidder shall fill out all blanks in the Proposal Form as therein required.

B. Payment for the various items listed in the Proposal Form shall constitute full compensation for furnishing all plant, labor, equipment, appliances, and materials, and performing all operations required to complete all work in conformity with the Drawings and Specifications. All costs for work not specifically mentioned in the Proposal Form shall be included in the Contract prices for the items listed.

C. In the case of unit basis items, the amount set forth under the ―Total" column shall be the extension of the item unit price bid on the basis of the estimated quantity for the item.

D. In case of discrepancy between the item unit price and the total price set forth for the item, the item unit price shall prevail; provided, however, that if the amount set forth as an item unit price is ambiguous, unintelligible, or uncertain for any cause, or is omitted, or in the case of unit basis items, is the same amount as the entry in the ―Total" column, then the amount set forth in the ―Total" column for the item shall prevail in accordance with the following:

1. As to lump sum items, the amount set forth in the ―Total" column shall be the item price.

2. As to unit basis items, the amount set forth in the ―Total" column shall be divided by the estimated quantity for the item and the price thus obtained shall be the item unit price.

3.04. Queries on Bidding

A. Questions regarding the Specifications or Drawings or any other portion of the Contract, or any addendum thereto shall be directed to the Designated Engineer of the Santa Clara Valley Water District, 5750 Almaden Expressway, San Jose, California 95118, in writing. No interpretation of the meaning of the Specifications, Drawings, or other prebid documents will be made to any bidder orally. Any written queries received later than 10 days before the bid due date may not be answered.

3.05. Rejection of Proposals

A. Proposals may be rejected if they show any alterations of form, additions not called for, conditional bids, incomplete bids, erasures, or irregularities of any

kind. Proposals in which the prices, in the opinion of the District, are unbalanced, may be rejected.

B. When proposals are signed by an agent, other than the officer or officers of a corporation authorized to sign contracts on its behalf, or a member of a partnership, a written authorization or Power of Attorney should be on file with the District prior to opening proposals or submitted with the Proposal; otherwise, the Proposal may be rejected as irregular and unauthorized.

3.06. Proposal Guarantee

A. All proposals shall be presented under sealed cover and accompanied by one of the following forms of bidder's security; cash, a cashier's check, certified check, or a bidder's bond executed by an admitted surety, made payable to the District. The security shall be in an amount equal to at least 10 percent of the total Contract price in the Proposal. A proposal will not be considered unless one such form of bidder's security is enclosed with it.

B. A bidder's bond will not be accepted unless it substantially conforms to the bond form included with the Proposal form and is properly filled out and executed. If desired, the bond form included therein, properly filled out as directed, may be executed and used as the bidder's bond. Blanks conforming to this form may be obtained from the District.

3.07. Withdrawal of Proposals

A. Any proposal may be withdrawn at any time prior to the time fixed in the Notice to Bidders for the opening of proposals only by written request for the withdrawal of the Proposal filed with the Clerk of the Board of Directors. The request shall be executed by the bidder or duly authorized representative. The withdrawal of a proposal does not prejudice the right of the bidder to file a new proposal.

3.08. Joint Proposals

A. If two or more bidders desire to bid jointly on a project, they shall file an affidavit of joint venture with the District in the form approved by the District, and such affidavit of joint venture will be valid only for the specified project for which it is filed. If such affidavit of joint venture is not filed as aforesaid and approved by the District prior to the time for opening proposals on the specific project for which it is submitted, a joint proposal submitted by the same bidders may be disregarded.

3.09. Disqualification of Bidders

A. Submittal of more than one proposal form from an individual, firm, partnership, corporation, or a combination thereof under the same or different names, will not be considered. If there is reason for believing that collusion exists among the bidders, none of the participants in such collusion will be considered for award of this Contract.

3.10. Addendum

A. Addenda may be issued prior to opening of proposals and shall be deemed a part of the original Specifications and Drawings. All such additions or changes shall be considered by the bidder in preparation of the Proposal. Addendum notification(s) will be sent to each planholder at the e-mail address provided by the Contractor for the planholders' list and addenda will be posted on the District's website at www.valleywater.org/Programs/Construction.aspx.

3.11. Guaranty

A. The Contractor may be required to furnish a written guaranty covering certain items of material and equipment for varying periods of time from the date of acceptance of the Contract. The material and equipment to be guaranteed, the form of guaranty, and the time limit of the guaranty will be specified in the Special Provisions. Said guaranty shall be signed and delivered to the Engineer before final payment will be made. Upon completion of the Contract, the amounts of the Contract bonds required in Article 4.03 may be reduced to conform to the total amount of the Contract bid prices for the items to be guaranteed and this amount shall continue in full force and effect for the duration of the guaranty period.

B. Guarantee periods shall commence on the date equipment or material is placed into service at the direction of the District. In the event such items are not placed into service prior to partial or final acceptance of the project, the guarantee period will commence on the date of such acceptance.

3.12. Bid Protest

A. Any Bid protest relating to the form or content of the Bid documents must be submitted in writing to the Designated Engineer identified in Article 13.01 of the Special Provisions. The protest must be received before 5 p.m. three (3) business days in advance of the Bid opening. Any Bidder who fails to submit a protest before the Bid opening deadline will be deemed to have waived any protest to the form or content of the Bid documents.

B. Any Bid protest unrelated to Article 3.12.A. must be submitted in writing to the Designated Engineer. The protest must be received before 5 p.m. on the third business day following Bid opening.

C. The protest document must contain a complete statement of the basis for the protest. The protest must refer to the specific portion(s) of the Bid documents that form the basis for the protest. The protest must include the name, address, and telephone number of the person representing the protesting party.

D. The Designated Engineer's final decision on a protest will be issued in writing no later than ten (10) calendar days following receipt of the protest.

SECTION 4. AWARD OF CONTRACT

4.01. Award of Contract

A. The District reserves the right to reject or waive irregularities, in any and all proposals, or in the bidding procedures.

B. The Contract, if awarded, will be to a responsible bidder, submitting the lowest responsive bid. The award, if made, will be within 45 days after the opening of the proposals. If the lowest responsible bidder refuses or fails to execute the Contract, the award may be made to the second lowest responsible bidder. The award, if made, will be within 75 days after the opening of the proposals. If the second lowest responsible bidder refuses or fails to execute the Contract, the Contract may be awarded to the third lowest responsible bidder. The award, if made, will be made within 105 days after the opening of the proposals. The periods of time specified above within which the award of Contract may be made shall be subject to extension for such further period as may be agreed upon in writing between the District and the bidder concerned.

4.02. Return of Bidder Security

A. No later than 60 days after the award of the Contract to the responsible bidder submitting the lowest responsive bid, the security of the unsuccessful bidder(s) will be returned, except for bidder's bonds and any guarantees which have been forfeited.

4.03. Contract Bonds

A. The Contractor shall furnish in the forms attached hereto, a performance bond and a payment bond executed by both the Contractor and the sureties, each equal to 100 percent of the contract sum.

B. Should any surety or sureties be deemed unsatisfactory at any time by the District, notice will be given the Contractor to that effect, who shall forthwith substitute a new surety or sureties satisfactory to the District. No further payment shall be deemed due or will be made under this Contract until the new sureties shall qualify and be accepted by the District.

4.04. Execution of Contract

A. The Contract Agreement must be signed by the responsible bidder submitting the lowest responsive bid and returned, together with the Contract bonds and insurance documents, within ten (10) days, of District's Notice of Contract Award letter, not including Sundays and legal holidays.

B. Formation of a Contract between the parties requires accomplishment of the following: (1) execution of the Agreement by Contractor; (2) submission by Contractor, and acceptance by District of the required Contract Bonds, and insurance coverages and documents; and (3) execution of the Agreement by

District. No Contract is formed until these three elements have been accomplished to the satisfaction of the District.

4.05. Failure to Execute Contract

A. Failure to execute the Agreement after Contract award and to file acceptable bonds and insurance documents as provided herein, within ten (10) days, not including Sundays and legal holidays, shall be just cause for the District's annulment of the award and forfeiture of the bidder's security.

SECTION 5. SCOPE OF WORK

5.01. Work to be Done

A. The work to be done consists of furnishing all labor, methods or processes, implements, tools, machinery, construction equipment, materials of any kind, and installed manufactured equipment, except as otherwise specified herein, to be furnished by the District or from sources provided by the District, which are required to construct in a good and worker-like manner all the work herein specified.

5.02. Final Cleanup

A. Before final inspection the Contractor shall clean the premises, and unless otherwise specified, remove all rubbish, excess materials, falsework, temporary structures, and equipment. All parts of the work shall be left in a neat and presentable condition to the satisfaction of the Engineer.

5.03. Change in Work

A. The District may, at any time or from time to time, order additions, deletions, or revisions in the work; these will be authorized by a written order issued by the Engineer and/or by a change order. Upon receipt of any such document, the Contractor shall promptly proceed with the work involved which will be performed under the applicable conditions of the Contract.

B. Changes in the Contract price shall be determined in accordance with Article 5.04. Changes in the Contract time shall be determined in accordance with Article 5.05.

C. If the District and the Contractor are unable to agree as to the extent, if any, of an increase or decrease in the Contract price or an extension or shortening of the Contract time that would be required as a result of a written order, a claim may be made therefor as provided in Articles 5.08 or 5.09.

D. The Contractor shall not be entitled to an increase in the Contract price nor an extension of the Contract time with respect to any work performed that is not required by the Contract, except in the case of an emergency, and except in the case of uncovering work as provided in Article 9.07.

E. The District and the Contractor shall execute appropriate change orders covering:

1. changes in the work which are ordered by the District pursuant to paragraph A above;

2. changes in the Contract price and/or Contract time which are agreed to by the parties; or

3. any other changes agreed to by the parties.

5.03.01. Allowable Quantity Variations

A. **General**: Increases or decreases in the quantity of a Contract item of work will be determined by comparing the actual pay quantity of an item of work with the approximate quantity in the listing of the bid items contained in the Proposal.

1. If the actual pay quantity of an item of work varies from the approximate quantity by 25 percent or less, payment will be made for the actual quantity of work performed at the Contract unit price listed in the Proposal.

2. If the actual pay quantity of an item of work varies from the approximate quantity by more than 25 percent, in the absence of an executed Contract Change Order specifying the compensation to be paid, the compensation payable to the Contractor will be determined in accordance with Article 5.03.01.A.1, or Article 5.03.01.A.2.

a. **Increases of More Than 25 Percent**: If the actual pay quantity of an item of work exceeds the approximate quantity by more than 25 percent, the amount of work in excess of 125 percent of the approximate quantity will be paid for by adjusting the Contract unit price. Such adjustment of the Contract unit price will be the positive or negative difference between the Contract unit price and the actual unit cost of the total pay quantity of the item. At the sole option of the Engineer, the actual unit cost of the work involved in such excess will be determined in accordance with Article 5.04.01.C.2 (by mutual acceptance of a lump sum amount) or Article 5.04.01.C.3 (cost of work, based on time and materials).

(1) If the cost of an item of work includes fixed costs, the fixed costs will be deemed to have been recovered by the Contractor by the payments made for 125 percent of the approximate quantity at the Contract unit price for the item and in computing the actual unit cost, the fixed costs will be excluded.

(2) When the compensation payable for the quantity of work performed in excess of 125 percent of the approximate quantity is less than $5,000 at the Contract unit price, no adjustment in the Contract unit price will be made unless requested in writing by the Contractor within 14 days from the date the Contractor became aware, or should have reasonably become aware, of the increase in quantity.

b. **Decreases of More Than 25 Percent**: If the actual pay quantity of an item of work is less than 75 percent of the approximate quantity, an adjustment in compensation will not be made unless the Contractor makes a request in writing within 14 days from the date the Contractor became aware, or should have reasonably

become aware, of the decrease in quantity. If the Contractor makes a request, the actual pay quantity of said item of work performed will be paid for by adjusting the Contract unit price. Such adjustment of the Contract unit price will be the positive or negative difference between the Contract unit price and the actual unit cost of the total pay quantity of the item, including fixed costs. At the sole option of the Engineer, payment for the actual quantity of work will be made in accordance with Article 5.04.01.C.2 (by mutual acceptance of a lump sum amount) or Article 5.04.01.C.3 (cost of work based on time and materials).

(1) Payment for the actual pay quantity of such item of work will in no case exceed the payment which would have been made for the performance of 75 percent of the approximate quantity of such item at the Contract unit price.

B. **Eliminated Items**: If any Contract item of the work is eliminated in its entirety, payment will be made to the Contractor for the actual cost incurred in connection with the eliminated Contract item if incurred prior to the date of notification in writing by the Engineer of such elimination.

1. If acceptable material is ordered by the Contractor for an eliminated Contract item prior to the date of notification of such elimination by the Engineer, and if orders for such material cannot be canceled, payment for such material will be made at the actual cost to the Contractor. In such case, the material shall become the property of the District. If the materials can be returned to the vendor and if the Engineer so directs, the material shall be returned and the Contractor will be paid for the actual cost for returning the material.

2. The actual costs to be paid by the District to the Contractor in accordance with this Article will be computed in accordance with Article 5.04.02.

C. **Supplemental Contract Items**: Items noted as ~~"~~Supplemental" in the Proposal may be deleted entirely or in part at the sole discretion of the District. The provisions of Articles 5.03.01.A.1., 5.03.01.A.2, and 5.03.01.B shall not apply to ~~"~~Supplemental Contract Items."

5.04. Change in Contract Price

5.04.01. General

A. The Contract price constitutes the total compensation payable to the Contractor for performing the work. All duties, responsibilities, and obligations assigned to or undertaken by the Contractor to perform the work shall be at the Contractor's expense without change in the Contract price.

B. The Contract price may only be changed by a change order. Any request for an increase in the Contract price shall be based on written notice delivered by the Contractor to the Engineer promptly, but in no event later than 10 days after the date of the occurrence of the event giving rise to the request and stating the general nature of the request. Notice of the amount of the request with supporting data shall be delivered within 45 days after the date of the occurrence, unless the Engineer allows an additional period of time to ascertain more accurate data in support of the request, and shall be accompanied by the Contractor's written statement that the amount requested covers all amounts (direct, indirect, and consequential) to which the Contractor is entitled as a result of the occurrence of the event. No request for an adjustment in the Contract price will be valid if not submitted in accordance with this Article.

C. The value of any work covered by a change order or of any request for an increase or decrease in the Contract price shall be determined in one of the following ways:

1. Where the work involved is covered by unit prices contained in the Contract documents, by application of unit prices to the quantities of the items involved; or

2. By mutual acceptance of a lump sum, which may include an allowance for overhead and profit not necessarily in accordance with Article 5.04.04; or

3. On the basis of the cost of work (determined as provided in Articles 5.04.02. and 5.04.03.) plus a Contractor's fee for overhead and profit (determined as provided in Article 5.04.04.)

5.04.02. Cost of Work (Based on Time and Materials)

A. **General**: The term ~~"~~cost of work" means the sum of all costs necessarily incurred and paid by the Contractor for labor, materials, and equipment in the proper performance of work. Except as otherwise may be agreed to in writing by the District, such costs shall be in amounts no higher than those prevailing in the locality of the project.

B. **Labor**: The cost of labor used in performing work by the Contractor, a subcontractor, or other forces, will be the sum of the following:

1. The actual wages paid plus any employer payments to or on behalf of workers for fringe benefits, including health and welfare, pension, vacation, and similar purposes. The cost of labor may include the wages paid to foremen when it is determined by the Engineer that the services of foremen do not constitute a part of the overhead allowance.

2. There will be added to the actual wages as defined above, a percentage set forth in the latest ~~"~~Labor Surcharge and Equipment Rental Rates" in use by the California State Department of Transportation which is in effect on the date upon which the work is accomplished. This percentage shall

constitute full compensation for all payments imposed by State and Federal laws including, but not limited to, workers' compensation insurance and Social Security payments.

3. The amount paid for subsistence and travel required by collective bargaining agreements.

4. For equipment operators, payment for the actual cost of labor and subsistence or travel allowance will be made at the rates paid by the Contractor to other workers operating similar equipment already on the work, or in the absence of such labor, established by collective bargaining agreements for the type of workers and location of the extra work, whether or not the operator is actually covered by such an agreement. A labor surcharge will be added to the cost of labor described herein in accordance with the provisions of subsection 2 of Article 5.04.02.B herein, which surcharge shall constitute full compensation for payments imposed by State and Federal laws, and all other payments made to on behalf of workers other than actual wages.

C. **Materials**: The cost of materials used in performing work will be the cost to the purchaser, whether Contractor or subcontractor, from the supplier thereof, except as the following are applicable:

1. Trade discounts available to the purchaser shall be credited to the District notwithstanding the fact that such discounts may not have been taken by the Contractor.

2. For materials secured by other than a direct purchase and direct billing to the purchaser, the cost shall be deemed to be the price paid to the actual supplier as determined by the Engineer. Markup, except for actual costs incurred in the handling of such materials, will not be allowed.

3. Payment for materials from sources owned wholly or in part by the purchaser shall not exceed the price paid by the purchaser for similar materials from said sources on extra work items or the current wholesale price for such materials delivered to the work site, whichever price is lower.

4. If, in the opinion of the Engineer, the cost of material is excessive, or the Contractor does not furnish satisfactory evidence of the cost of such material, then the cost shall be deemed to be the lowest current wholesale price for the quantity concerned delivered to the work site, less trade discount. The District reserves the right to furnish materials for the extra work and no claim shall be made by the Contractor for costs and profit on such materials.

D. **Equipment**: The Contractor will be paid for the use of equipment at the rental rate listed for such equipment specified in the current edition of the Department of Transportation publication entitled, ~~L~~abor Surcharge and Equipment Rental

Rates," which is in effect on the date upon which the work is accomplished. Such rental rates will be used to compute payments for equipment whether the equipment is under the Contractor's control through direct ownership, leasing, renting, or another method of acquisition. The rental rate to be applied for use of each item of equipment shall be the rate resulting in the least total cost to the District for the total period of use. If it is deemed necessary by the Contractor to use equipment not listed in the foregoing publication, an equitable rental rate for the equipment will be established by the Engineer. The Contractor may furnish cost data which might assist the Engineer in the establishment of the rental rate.

1. The rental rates paid, as above provided, shall include the cost of fuel, oil, lubrication supplies, small tools, necessary attachments, repairs and maintenance of all kinds, depreciation, storage, insurance, and all incidentals. Operators of equipment will be separately paid for as provided in subsection 4 of Article 5.04.02.B.

2. All equipment shall be in good working condition and suitable for the purpose for which the equipment is to be used.

3. Before construction equipment is used on the extra work, the Contractor shall plainly stencil or stamp an identifying number thereon at a conspicuous location, and shall furnish to the Engineer, in duplicate, a description of the equipment and its identifying number.

4. Unless otherwise specified, manufacturer's ratings and manufacturer-approved modifications shall be used to classify equipment for the determination of applicable rental rates. Equipment which has no direct power unit shall be powered by a unit of at least the minimum rating recommended by the manufacturer.

5. Individual pieces of equipment or tools having a replacement value of $500 or less, whether or not consumed by use, shall be considered to be small tools and no payment will be made therefor.

E. **Owner-Operated Equipment**: When owner-operated equipment is used to perform work and is to be paid for as extra work, the Contractor will be paid for the equipment and operator as follows:

1. Payment for the equipment will be made in accordance with the provisions in Article 5.04.02.D. –Equipment."

2. Payment for the cost of labor and subsistence or travel allowance will be made at the rates paid by the Contractor to other workers operating similar equipment already on the project, or, in the absence of such other workers, at the rates for such labor established by collective bargaining agreement for type of worker and location of the work, whether or not the owner-operator is actually covered by such an agreement. A labor surcharge will be added to the cost of labor described herein, in

accordance with the provisions in subsection 2 of Article 5.04.02(B), ~~L~~abor."

3. To the direct cost of equipment rental and labor, computed as provided herein, will be added the markup for equipment rental and labor as provided in Article 5.04.04, ~~C~~ontractor's Fee."

F. **Equipment Time**: The rental time to be paid for equipment on the work shall be the time the equipment is in productive operation on the work being performed and shall include the time required to move the equipment to the new location and return it to the original location or to another location requiring no more time than that required to return it to its original location; except, that moving time will not be paid if the equipment is used on other than the extra work. Loading and transporting costs will be allowed, in lieu of moving time, when the equipment is moved by means other than its own power. No payment will be made for loading and transporting costs when the equipment is used at the site of the extra work on other than the extra work. The following shall be used in computing the rental time of equipment on the work:

1. When hourly rates are listed, any part of an hour less than 30 minutes of operation shall be considered to be ½-hour of operation, and any part of an hour in excess of 30 minutes will be considered 1-hour of operation.

2. When daily rates are listed, operation for any part of a day less than 4 hours shall be considered to be ½-day of operation.

3. Rental time will not be allowed while equipment is inoperative due to breakdowns or Contractor caused delays.

G. **Cost of Work Documentation**: The Contractor shall furnish the Engineer Daily Extra Work Reports on a daily basis covering the direct costs of labor and materials and charges for equipment whether furnished by the Contractor, subcontractor, or other forces. The District will provide the Extra Daily Work Report forms to the Contractor. The Contractor or an authorized agent shall sign each Daily Extra Work Report. The Daily Extra Work Report shall provide names and classifications of workers and hours worked; size, type, and identification number of equipment; and the hours operated. Copies of certified payrolls and statement of fringe benefit shall substantiate labor charges. Valid copies of vendor's invoices shall substantiate material charges.

1. The Engineer will make any necessary adjustments. When these reports are agreed upon and signed by both parties, they shall become the basis of payment for the work performed, but shall not preclude subsequent adjustment based on a later audit.

2. The Contractor shall inform the Engineer when extra work will begin so that the District inspector can concur with the Daily Extra Work Reports. Failure to conform to these requirements may impact the Contractor's ability to receive proper compensation.

5.04.03. Special Services

A. Special services are defined as that work characterized by extraordinary complexity, sophistication, or innovations, or a combination of the foregoing attributes which are unique to the construction industry. The following may be considered by the Engineer in making estimates for payment for special services:

1. When the Engineer and the Contractor, by agreement, determine that a special service is required which cannot be performed by the forces of the Contractor or those of any of its subcontractors, the special service may be performed by an entity especially skilled in the work to be performed. After validation of invoices and determination of market values by the Engineer, invoices for special services based upon the current fair market value thereof may be accepted without complete itemization of labor, material, and equipment rental costs.

2. When the Contractor is required to perform work necessitating special fabrication or machining process in a fabrication or a machine shop facility away from the jobsite, the charges for that portion of the work performed at the offsite facility may, by agreement, be accepted as a special service and accordingly, the invoices for the work may be accepted without detailed itemization.

3. All invoices for special services will be adjusted by deducting all trade discounts offered or available, whether the discounts were taken or not. In lieu of the allowances for overhead and profit on labor, materials, and equipment specified in Article 5.04.04. herein, a single allowance of ten (10) percent will be added to invoices for special services.

5.04.04. Contractor's Fee

A. Work ordered on the basis of time and materials will be paid for at the actual and necessary cost as determined by the Engineer, plus allowances for overhead and profit which allowances shall constitute the "Contractor's Fee," except as provided in subparagraph B of this Article. For extra work involving a combination of increases and decreases in the work, the actual necessary cost will be the arithmetic sum of the additive and deductive costs. The allowance for overhead and profit shall include compensation for superintendence, bond and insurance premiums, taxes, all field and home office expenses, and all other items of expense or cost not included in the cost of labor, materials, or equipment provided for under Articles 5.04.02.B, C, D, and E, herein. The allowance for overhead and profit will be made in accordance with the following schedule:

Actual Necessary Cost	Overhead and Profit Allowance
Labor	33 percent
Materials	15 percent
Equipment	15 percent

B. Labor, materials, and equipment may be furnished by the Contractor or by the subcontractor on behalf of the Contractor. When all or any part of the extra work is performed by a subcontractor, the allowance specified in subparagraph A of Article 5.04.04 shall only be applied to the labor, materials, and equipment costs of the subcontractors to which the Contractor may add 5 percent of the subcontractor's total cost for the extra work. Regardless of the number of hierarchal tiers of subcontractors, the 5 percent increase above the subcontractor's total cost, which includes the allowances for overhead and profit specified herein, may be applied one time only for each separate work transaction.

5.04.05. Compensation for Time Extensions

A. Adjustments in compensation for time extension will be allowed only for causes in Article 5.05.01.B.1 through Article 5.05.01.B.4 computed in accordance with Article 5.04 and the following. No adjustments in compensation will be allowed when District-caused delays to a controlling item of work and Contractor-caused delays to a controlling item of work occur concurrently or for causes in Article 5.05.01.B.5 through Article 5.05.01.B.6.

B. Compensation for idle time of equipment will be determined in accordance with the provisions in Article 5.04.02.E and Section 8-1.09 of the State Specifications.

5.05. Change of Contract Time

5.05.01. General

A. The Contract time may only be changed by a change order. Any request for an extension of the Contract time shall be based on written notice delivered by the Contractor to the Engineer promptly, but in no event later than 10 days after the date of the occurrence of the event giving rise to the request and stating the general nature of the request. Notice of the extent of the request with supporting data shall be delivered within 45 days after the date of such occurrence, unless the Engineer allows an additional period of time to ascertain more accurate data in support of the request, and shall be accompanied by the Contractor's written statement that the adjustment requested is the entire adjustment to which the Contractor has reason to believe it is entitled as a result of the occurrence of said event. No request for an adjustment in the Contract time will be valid if not submitted in accordance with the requirements of this Article.

1. The Contract time will only be extended when a delay occurs which impacts a controlling item of work as shown on the work schedules required in the Special Provisions. Time extensions will be allowed only if the cause is beyond the control and without the fault or negligence of the Contractor. Time extensions will also be allowed when District-caused delays to a controlling item of work and Contractor-caused delays to a controlling item of work occur concurrently. The Contractor will be notified if the Engineer determines that a time extension is not justified.

B. The Contract time will be extended in an amount equal to time lost due to delays beyond the control of the Contractor if a request is made therefor as provided in this Article. An extension of Contract time will only be granted for days on which the Contractor is prevented from proceeding with at least 75 percent of the normal labor and equipment force actually engaged on the said work, by said occurrences or conditions resulting immediately therefrom which impact a controlling item of work as determined by the Engineer. Such delays shall include:

1. Changes.

2. Failure of the District to furnish access, right of way, completed facilities of related projects, Drawings, materials, equipment, or services for which the District is responsible.

3. Survey error by the District.

4. Suspension of work pursuant to Articles 7.05(A) and 7.05(C).

5. Occurrences of a severe and unusual nature including, but not restricted to, acts of God, fires, and excusable inclement weather. An ~~"~~act of God" means an earthquake, flood, cloudburst, cyclone, or other cataclysmic phenomena of nature beyond the power of the Contractor to foresee or to make preparation in defense against, but does not include ordinary inclement weather. Excusable inclement weather is any weather condition, the duration of which varies in excess of the average conditions expected, which is unusual for the particular time and place where the work is to be performed, or which could not have been reasonably anticipated by the Contractor, as determined from U.S. Weather Bureau records for the proceeding 3-year period or as provided for in the Special Provisions.

6. Act of the public enemy, act of another governmental entity, public utility, epidemic, quarantine restriction, freight embargo, strike, or labor dispute. A delay to a subcontractor or supplier due to the above circumstances will be taken into consideration for extensions to the time of completion.

5.05.02. Extensions of Time for Delay Due to Excusable Inclement Weather

A. The Contract time will be extended for as many days in excess of the average number of days of excusable inclement weather, as defined in Article 5.05.01.B.5., as the Contractor is specifically required under the Special Provisions to suspend construction operations, or as many days as the Contractor is prevented by excusable inclement weather, or conditions resulting immediately therefrom, from proceeding with at least 75 percent of the normal labor and equipment force engaged on critical items of work as shown on the schedule.

B. Should the Contractor prepare to begin work at the regular starting time at the beginning of any regular work shift on any day on which excusable inclement weather, or the conditions resulting from the weather prevents work from beginning at the usual starting time and the crew is dismissed as a result thereof, the Contractor will be entitled to a 1–day extension whether or not conditions change thereafter during said day and the major portion of the day could be considered to be suitable for such construction operations.

C. The Contractor shall base the construction schedule upon the inclusion of the number of days of excusable inclement weather specified in the Article titled ―Excusable Inclement Weather Delays," of the Special Provisions. No extension of the Contract time due to excusable inclement weather will be considered until after the said aggregate total number of days of excusable inclement weather has been reached; however, no reduction in Contract time would be made if said number of days of excusable inclement weather is not reached.

5.06. Changed Site Conditions

A. If any work involves digging trenches or other excavations below the surface, the Contractor shall promptly and before the following conditions are disturbed, notify the District in writing of any:

1. Material that the Contractor believes may be a regulated material that is required to be removed to a Class I, Class II, or Class III disposal site in accordance with provisions of existing law.

2. Subsurface or latent physical conditions at the site differing from those indicated in this Contract.

3. Unknown physical conditions at the site of any unusual nature, different materially from those ordinarily encountered and generally recognized as inherent in work of the character provided for in the Contract.

B. The District will promptly investigate the condition and if it finds that the conditions do materially so differ, or do involve regulated material, and cause a decrease or increase in the Contractor's cost of, or the time required for, performance of any part of the work, the District will issue a change order under the procedures described in this Contract. For regulated materials, the District reserves the right to use other forces for exploratory work to identify and determine the extent of such material and for removing regulated material from such areas.

C. In the event that a dispute arises between the District and the Contractor on whether the conditions materially differ or on the Contractor's cost of, or time required for, performance of any part of the work, the Contractor shall not be excused from any scheduled completion date provided for by this Contract but shall proceed with all work to be performed under the Contract. The Contractor shall retain any and all rights provided either by this Contract or by law which pertain to the resolution of disputes and protests between the contracting parties.

5.07. Cost Reduction Incentive

A. The Contractor may submit to the Engineer, in writing, proposals for modifying the Drawings, Specifications, or other requirements of the Contract for the sole purpose of reducing the total cost of construction as provided for in Section 5-1.14 of the State Specifications, wherein the words ―State" and ―Department" shall mean District.

5.08. Disputes

A. It is the intention of this Article that disputes between parties arising under and by virtue of the Contract be brought to the attention of the Engineer at the earliest possible time in order that the matters may be resolved, if possible, or other appropriate action promptly taken. Disputes are divided into four categories: notice, protest, potential claim, and claim. During the course of the project and up to receiving the proposed final estimate, the Contractor must submit a contract dispute in the form of a written notice, protest, or a potential claim to the Engineer.

B. Dispute Resolution Review process, if required, shall be in accordance with Article 5.10 of these Specifications.

5.08.01. Protest

A. If the Contractor considers any work demanded to be outside of the requirements of the Contract, or considers any records or ruling or act or omission of the Engineers to be unfair, the Contractor shall immediately, upon such work being demanded, or such record or ruling being made, ask in writing for written instructions or decisions, whereupon the Contractor shall proceed without delay to perform the work or to conform to the record or ruling and, within 15 days after date of receipt of the written instructions or decisions, shall file a written protest with the Engineer stating clearly in detail the basis of the protest. Except for such protests as are made of record in the manner herein specified and within the time limit stated, the records, rulings, instructions, decisions, and acts or omissions of the Engineer shall be final and conclusive. Instructions and decisions of the Engineer contained in letters transmitting Drawings to the Contractor shall be considered as written instructions and decisions subject to protest as herein provided.

5.08.02. Notice of Potential Claims

A. Contractor is not entitled to additional compensation for any cause unless Contractor submits to the District a written Notice of Potential Claim as hereinafter specified.

B. The written Notice of Potential Claim must set forth the reasons for which Contractor believes additional compensation and/or time will or may be due, the nature of the costs and/or time involved, and, insofar as possible, the amount of the potential claim. The said notice as above required must have been submitted

to District before Contractor performs the work giving rise to the potential claim for additional compensation and/or time, if based on an act or failure to act by District, or in all other cases within fourteen (14) days after the happening of the event, thing or occurrence giving rise to the potential claim.

C. Notice of Potential Claim shall be certified in accordance with Article 5.09.

D. Compliance with the foregoing shall not be a prerequisite to any claim that is based on differences in measurement or errors of computations as to Contract quantities.

5.09. Claims

A. Claims by the Contractor must be submitted to the Engineer on or before the date of final payment. Claims shall be in writing, shall specify the basis for each claim, shall refer to the applicable provision or provisions of the Contract, and shall show the method of computation and the actual amount claimed. The claim shall include documents necessary to substantiate the claim and to establish liability, causation, and damages. All other factual data, including documentation of actual costs pertaining to that claim, shall be submitted. Each issue contained in a claim must include documentation including background, chronology, Contractor's position, supporting documentation of merit, supporting documentation of damages, schedules (if appropriate) and productivity exhibits (if appropriate).

B. Claims must be certified using the following language:

I,_____, BEING THE _____ (MUST BE AN OFFICER) OF_____ (CONTRACTOR), DECLARE UNDER PENALTY OF PERJURY UNDER THE LAWS OF THE STATE OF CALIFORNIA, AND DO PERSONALLY CERTIFY AND ATTEST THAT: I HAVE THOROUGHLY REVIEWED THE ATTACHED CLAIM FOR ADDITIONAL COMPENSATION AND/OR EXTENSION OF TIME, AND KNOW ITS CONTENTS, AND SAID CLAIM IS TRUTHFUL AND ACCURATE; THAT THE AMOUNT REQUESTED ACCURATELY REFLECTS THE CONTRACT ADJUSTMENT FOR WHICH THE DISTRICT IS LIABLE; AND, FURTHER, THAT I AM FAMILIAR WITH CALIFORNIA PENAL CODE SECTION 72 AND CALIFORNIA GOVERNMENT CODE SECTION 12650, ET SEQ, PERTAINING TO FALSE CLAIMS, AND FURTHER KNOW AND UNDERSTAND THAT SUBMISSION OR CERTIFICATION OF A FALSE CLAIM MAY LEAD TO FINES, IMPRISONMENT AND/OR OTHER SEVERE LEGAL CONSEQUENCES.

C. The District, or their authorized representatives, shall have access, upon reasonable notice, during normal business hours, to Contractor and subcontractors' books, documents and accounting records, including but not limited to, bid worksheets, bids, subcontractor bids and proposals, estimates, cost accounting data, accounting records, payroll records, time sheets, canceled checks, profit and loss statements, balance sheets, project correspondence including but not limited to all correspondence between Contractor and its

sureties and subcontractors/vendors, project files, scheduling information, and other records of the Contractor and all subcontractors directly or indirectly pertinent to the work of the Project; original as well as changed and claimed extra work, to verify and evaluate the accuracy of cost and pricing data submitted with any Claim for which additional compensation has been requested or notice of potential Claims has been tendered. Such access shall include the right to examine and audit such records, and make excerpts, transcriptions, and photocopies at District's cost.

D. The parties agree that in the event Contractor or any subcontractor fails to comply with this Article, the claim will not be considered by the District. Contractor agrees to impose upon its subcontractors by appropriate subcontract provision, the obligations of this Article of the Standard Provisions.

E. No claim shall be considered where there has been a failure to comply with the requirements relative to Protest and Notice of Potential Claims as written elsewhere in these Specifications. The presentation of a claim shall be an express condition precedent to the Contractor's recourse to: (A) informal conference; (B) nonbinding mediation, and (C) judicial arbitration to resolve disputes on construction claims of $375,000 or less, or court action upon the Contract for claim in excess of $375,000 in compliance with Section 20104 of the Public Contract Codes.

5.09.01. Claims Less Than Fifty Thousand Dollars

A. For claims of less than fifty thousand dollars ($50,000), the Engineer shall respond in writing to any written claim within 45 days of receipt of the claim, or may request, in writing, within 30 days of receipt of the claim, any additional documentation supporting the claim or relating to defenses or claims the District may have against the Contractor.

B. If additional information is thereafter required, it shall be requested and provided pursuant to this Article upon mutual agreement of the Engineer and the Contractor.

C. The Engineer's written response to the claim, as further documented, shall be submitted to the Contractor within 15 days after receipt of the further documentation or within a period of time no greater than that taken by the Contractor in producing the additional information, whichever is greater.

5.09.02. Claims From Fifty Thousand Dollars to Three Hundred and Seventy-Five Thousand Dollars

A. For claims greater than or equal to fifty thousand dollars ($50,000) and less than or equal to three hundred seventy-five thousand dollars ($375,000), the Engineer shall respond in writing to all written claims within 60 days of receipt of the claim, or may request in writing, within 30 days of receipt of the claim, any additional documentation supporting the claim or relating to defenses or claims the District may have against the Contractor.

B. If additional information is thereafter required, it shall be requested and provided pursuant to this Article, upon mutual agreement of the Engineer and the Contractor.

C. The Engineer's written response to the claims, as further documented, shall be submitted to the Contractor within 30 days after receipt of the further documentation, or within a period of time no greater than that taken by the Contractor in producing the additional information or requested documentation, whichever is greater.

5.09.03. Informal Conferences

A. If the Contractor disputes the Engineer's written response, or the Engineer fails to respond within the time prescribed, the Contractor may so notify the Engineer, in writing, either within 15 days of receipt of the Engineer's response or within 15 days of the Engineer's failure to respond within the time prescribed, respectively, and demand an informal conference to meet and confer for settlement of the issues in dispute. Upon such demand, the Engineer shall schedule a meet and confer conference within 30 days.

B. If, following the meet and confer conference, the claim or any portion remains in dispute, the Contractor may file a claim pursuant to Chapter 1 (commencing with Section 900) and Chapter 2 (commencing with Section 910) of Part 3 of Division 3.6 of Title 1 of the Government code. For purposes of those provisions, the running of the period of time within which a claim must be filed shall be tolled from the time the Contractor submits his or her written claim pursuant to Article 5.09 until the time the claim is denied, including any period of time utilized by the meet and confer conference.

5.09.04. Civil Actions

A. The following procedures are established for all civil actions filed to resolve claims:

1. Within 60 days, but no earlier than 30 days, following the filing or responsive pleadings, the court shall submit the matter to nonbinding mediation unless waived by mutual stipulation of both parties. The mediation process shall provide for the selection within 15 days by both parties of a disinterested third person as mediator, shall be commenced within 30 days of the submittal, and shall be concluded within 15 days from the commencement of the mediation unless a time requirement is extended upon a good cause showing to the court.

2. If the matter remains in dispute, the case shall be submitted to judicial arbitration pursuant to Chapter 2.5 (commencing with Section 1141.10) of Title 3 of Part 3 of the Code of Civil Procedure, notwithstanding Section 1141.11 of that code. The Civil Discovery Act of 1986 (Article 3 commencing with Section 2016, of Chapter 3 of Title 3 of Part 4 of Code

of Civil Procedure) shall apply to any proceeding brought under this subdivision consistent with the rules pertaining to judicial arbitration.

B. In addition to Chapter 2.5 (commencing with Section 1141.10) of Title 3 of Part 3 of the Code of Civil Procedure, (A) arbitrators shall, when possible, be experienced in construction law, and (B) any party appealing an arbitration award who does not obtain a more favorable judgment shall, in addition to payment of costs and fees under that chapter, also pay the attorney's fees on appeal of the other party.

5.10. Dispute Review Board

A. When specified in the Special Provisions that a Dispute Review Board (DRB) process is required, the DRB process shall be in accordance with these Specifications.

5.10.01. General

A. A DRB is to assist in and facilitate the avoidance and timely, impartial resolution of disputes.

B. All disputes referred to the DRB shall be subject to the dispute resolution process herein described as a condition precedent to initiating a subsequent dispute resolution process such as arbitration or litigation for that dispute.

C. Except as explicitly otherwise provided, all disputes that are actionable under the provisions of the prime contract between the District and the Contractor may be referred to the DRB.

D. The DRB shall be utilized when dispute or potential claim resolution at the project level is unsuccessful. The DRB shall function until the day of acceptance of the Work by the District Board of Directors, at which time the work of the DRB will cease except for completion of unfinished dispute hearings and reports.

E. The Contractor shall include in all subcontracts that subcontractors and suppliers of any tier (a) agree to submit subcontractor claims to the Contractor in a proper form and in sufficient time to allow processing by the Contractor in conformance with the DRB resolution specifications; (b) agree to be bound by the terms of the DRB provisions to the extent applicable to subcontractor claims; (c) agree that, to the extent a subcontractor claim is involved, completion of all steps required under these DRB special provisions shall be a condition precedent to pursuit by the subcontractor of other remedies permitted by law, including without limitation of a lawsuit against the Contractor; and (d) agree that the existence of a dispute resolution process for disputes involving subcontractor claims shall not be deemed to create any claim, right, or cause of action by any subcontractor or supplier against the District.

F. The DRB reports shall not be binding on the District or the Contractor, and shall be admissible in subsequent dispute resolution proceedings.

5.10.02. DRB Qualifications

A. Board members shall be experienced in the interpretation of contract documents and the resolution of construction disputes and in the type of construction to be performed.

B. The following definitions apply for the purpose of setting forth experience and disclosure requirements.

1. Party directly involved: The District or the Contractor of this Project.

2. Contractor includes all joint-venture partners individually.

3. Party indirectly involved: The construction manager, designers, architects, engineers, or other professional service firms or consultants, joint venture partners, subcontractors of any tier, and suppliers on this Project.

4. Financial ties: any ownership interest, loans, receivables, or payables.

C. Eligibility:

1. Direct Employment:

a. Current employees of any of the parties directly or indirectly involved are prohibited from serving as Board members.

b. Prospective Board members who were past employees of one of the parties directly involved must obtain permission from the other party prior to appointment.

c. Previous direct employment by one of the parties indirectly involved must be disclosed.

2. Consulting Assignments:

a. Individuals who are employed in a consulting capacity by any of the parties directly involved are prohibited from serving as Board members.

b. Prospective Board members who are currently employed as a consultant by one of the parties indirectly involved must obtain permission from the other party prior to appointment.

c. Previous employment as a consultant by any party directly or indirectly involved must be disclosed.

3. Financial Ties:

   a. Individuals with financial ties to any of the parties directly involved are prohibited from serving as Board members.

   b. Current financial ties to any of the parties indirectly involved must be disclosed.

   c. Previous financial ties with any party, directly or indirectly involved must be disclosed.

4. Close Personal or Professional Relationships:

   a. Individuals with close personal or professional relationships with a key member of any party directly involved are prohibited from serving as Board members.

   b. Such current relationships with a member of any party indirectly involved in the contract must be disclosed.

   c. All past personal or professional relationships with a key member of one of the parties directly or indirectly involved must be disclosed.

5. All past and current service as a Board member on projects where any of the parties directly or indirectly involved in this contract were also involved must be disclosed.

6. No member shall have had substantial prior involvement in the Project, in the judgment of the District and the Contractor.

D. Ongoing Responsibilities: While serving as a Board member on the DRB, no member shall participate in any discussion contemplating the creation of an agreement or making an agreement with any party directly or indirectly involved in the contract regarding employment or fee-based consulting services, or any other business arrangement after the contract is completed.

5.10.03. Establishment of the DRB

A. The District and the Contractor shall jointly participate in the evaluation and selection of prospective nominees for the DRB.

B. The District and the Contractor shall provide to the DRB nominees a list of the construction manager, designers, architects, engineers, professional service firms, consultants, joint-venture partners, subcontractors, and suppliers involved, or likely to be involved in the Project, with a listing of key personnel of each. DRB nominees shall provide the following, pursuant to the above requirements and in addition to the nominee's full name and contact information, to both parties:

1. Resume showing construction experience qualifying the person as a DRB member.

2. Resume showing past DRB participation, if any. List each DRB assignment separately, indicating the name and location of the Project, dates of DRB service, name of owner, name of contractor, contract value, nominating party, if applicable, names of the other Board members and the number of disputes heard.

3. Disclosure statement describing past, present, and anticipated relationships, including indirect relationships through the nominee's full-time employer, if any, to the Project, and with all parties directly and indirectly involved in the contract. Disclose close professional or personal relationships with key members of all these parties.

4. Disclosure is a continuing obligation of all Board members throughout the life of the contract.

C. The District and the Contractor shall then have three weeks to solicit and receive information from prospective candidates, and another two weeks to review and to jointly agree on the final selection of the three members to serve on the DRB. In the event that all three members were not selected from the initial pool of nominees, the process shall be repeated.

D. If the DRB Chair has not already been appointed as part of the selection process, then as soon as is practicable the Board members shall nominate the Chair and submit the nominee's resume and request approval by the District and the Contractor.

5.10.04. DRB Meetings

A. The DRB will visit the project site and meet with representatives of the parties at periodic intervals and at other times requested by the parties.

B. Each meeting shall consist of an informal discussion and a field observation of the work in progress. The discussion and field observation shall be attended by personnel of the District and the Contractor.

5.10.05. Dispute Resolution

A. Prior Good-Faith Negotiation:

1. The District and the Contractor shall enter into good-faith negotiations to settle a dispute before referring such dispute to the DRB.

2. These good-faith negotiations shall be founded on the principle of full and timely disclosure of each party's position to the other party, including the exchange of pertinent supporting records, analyses, expert reports, and similar documentation, and shall proceed without delay following the

inception of the dispute. Such good-faith negotiations may involve the solicitation and rendering of a DRB advisory opinion as described herein.

B. Dispute Referral:

1. A dispute may be referred to the DRB by either the District or the Contractor. The dispute referral shall be made in writing to the DRB Chair with a copy concurrently provided to the other Board members and the other party.

2. If the contract stipulates a precedent dispute resolution process prior to referral to the DRB, and if one party fails to meet or adhere to the time requirements set forth under the contract for this process, the other party may then refer the dispute to the DRB. In the event that the contract does not specify such precedent process, or specifies a precedent process without time requirements, either party may refer the dispute to the DRB after passage of a reasonable period of time without progress toward a negotiated settlement and the DRB will determine if the dispute should be heard.

3. The dispute referral shall concisely define the nature and specifics of the dispute that are to be considered by the DRB and the scope of the recommendation requested.

4. The DRB Chair shall confer with the parties to establish a due date for delivering pre-hearing submittals, and a date, time, and location for convening the DRB hearing. Hearings shall be convened at the next periodic meeting, unless the parties agree to a shorter or longer period.

C. Pre-Hearing Submittal:

1. The District and the Contractor shall each prepare a pre-hearing submittal and transmit it to all three members of the DRB and the other party. The pre-hearing submittal, comprising of a position paper with such backup data as is referenced in the position paper, shall be tabbed, indexed, and the pages consecutively numbered.

2. Both position papers shall, at a minimum, contain the following:

   a. A joint statement of the dispute, and the scope of the desired report, placed in a prominent location. The language of this joint statement shall summarize in a few sentences the nature of the dispute. If the parties are unable to agree on the wording of the joint statement of dispute, each party's position paper shall contain both statements, and identify the party authoring each statement.

   b. The basis and justification for the party's position, with reference to contract language and other supporting documents for each

element of the dispute. In order to minimize duplication and repetitiveness, the parties may identify a common set of documents that will be referred to by both parties and submit them in a separate package.

c. When the scope of the hearing includes quantum, the referring party shall include a schedule impact analysis and full cost details, calculated in accordance with methods set forth in the contract. This requirement does not apply if the report is to be made for entitlement alone or for entitlement with guidelines for quantum.

3. The number of copies, distribution requirements, and time for submittal will be established by the DRB and communicated to the parties by the Chair.

D. DRB Hearings:

1. The District will arrange for or provide hearing facilities at or near the site.

2. Attendance:

a. The District and Contractor shall both limit attendance at the hearing to personnel directly involved in the dispute and participants in the good-faith negotiations that were conducted prior to submittal to the DRB except as noted below.

b. Prior to the date established for the hearing, each party shall provide a list of proposed attendees to the DRB and to the other party. In the event of any disagreement, the DRB shall make the final determination as to who attends the hearing.

c. Attorneys shall not participate in the hearing. Attorneys representing the parties are permitted to attend dispute hearings, provided that prior permission is obtained from the other party.

d. At DRB hearings regarding claims by a subcontractor, including pass-through claims by a lower tier subcontractor or supplier, against the Contractor which are actionable by the Contractor against the District, the Contractor shall require and ensure that each subcontractor involved in the dispute have presented an authorized representative with actual knowledge of the facts underlying the subcontractor claims.

3. The conduct of the hearing shall be established by the DRB according to their operating procedures and generally consistent with the following guidelines:

a. The party who referred the dispute to the DRB shall present its position first, followed by the other party.

b. Both parties shall be allowed successive rebuttals, assuring a full and adequate opportunity to present their position, and to rebut the opposing party's position, until, in the DRB's opinion, all aspects of the dispute have been fully and fairly covered.

c. The DRB shall be fully prepared to, and may at any time, ask questions, request clarifications, or ask for additional data and/or job records.

d. Either party may request that the DRB direct a question to, or request a clarification from the other party. The DRB shall determine at what point in the proceedings such requests may be made and if they will be granted. In general, the DRB will not allow one party to be questioned directly by the other party.

e. In difficult or complex cases, additional hearings may be necessary to facilitate full consideration and understanding of the dispute.

f. The DRB, in its discretion, may allow introduction of arguments, exhibits, handouts, or documentary evidence that were not included in that party's pre-hearing position paper and have not been previously submitted to the other party. In such cases the other party will be granted time to review and prepare a rebuttal to the new material.

E. Failure to Prepare a Pre-Hearing Submittal or Attend a DRB Hearing:

1. In the event that either party fails to deliver a pre-hearing submittal by the date established by the DRB, the DRB shall, at its discretion, determine whether the hearing shall proceed as originally scheduled, or whether additional time shall be provided and a new date established. On the final date and time established for the hearing, the DRB shall proceed with the hearing utilizing the information that has been submitted.

2. In the event that some or all of the representatives of either party fails to appear at the appointed time of a DRB hearing, the DRB shall proceed with the hearing. The hearing shall take place as if all party representatives were in attendance, and the DRB shall consider all evidence brought before it and hear testimony from those party representatives that are present.

F. Use of Outside Experts:

1. By the District or Contractor:

a. A party intending to offer an outside expert's analysis at the hearing shall disclose such intention in writing to the other party and to the DRB no less than 30 days prior to the due date for

delivering the pre-hearing submittal. The expert's name and a general statement of the area of the dispute that will be covered by his or her testimony shall be included in the disclosure.

b. Upon receipt of the above disclosure, the other party shall have the opportunity to secure the services of an outside expert to address or respond to those issues that may be raised by the other party's outside expert. The disclosure requirements shall be the same as that specified above, except the time requirement is 10 days.

c. The cost for securing outside expert services shall be borne by the party securing such services.

2. By the DRB:

a. Prior to arranging for outside experts, the DRB shall obtain prior approval from the District and the Contractor by providing:

(1) A statement explaining why the expert assistance is needed.

(2) An estimate of the cost of the expert assistance.

(3) A disclosure statement, in accordance with the requirements of 5.10.03.B.2 herein, using the criteria established in 5.10.02.C herein.

(4) A confidentiality statement, consistent with the DRB's such agreement, executed by the proposed expert.

b. The Contractor and the District shall equally bear the cost of the services of the outside expert employed by the DRB.

G. DRB Report:

1. The DRB's recommendations for resolution of a dispute will be formalized in a written report with format as determined by the DRB and signed by all Board members. The report should consist of a concise description of the dispute, short statements of each party's position, findings as to the facts of the dispute, discussion and rationale for the recommendation(s), and the recommendation(s). The report shall be submitted concurrently to the parties, as soon as possible after completion of the hearing as agreed by all parties.

2. If the DRB cannot arrive at a unanimous report, the Board shall prepare minority findings and recommendation(s), which, together with the majority findings and recommendation(s) shall comprise the DRB report.

The report shall identify the issues of disagreement, along with the reasons for disagreement.

3. Clarification:

   a. Either party may request clarification of a report within 10 days following receipt of the report. Within a reasonable period of time, the DRB shall provide written clarification to both parties.

   b. Requests for clarification shall be submitted in writing simultaneously to the DRB and to the other party.

   c. Only one request for clarification per dispute from each party will be allowed.

4. Reconsideration:

   a. Either party may request reconsideration of a report, within 10 days following receipt of the report, when new information is obtained or developed that was not known at the time of the hearing, or when, in the party's opinion, the DRB misunderstood or failed to consider pertinent facts of the dispute. Within a reasonable period of time, the DRB shall provide written reconsideration to both parties.

   b. Requests for reconsideration shall be submitted in writing simultaneously to the DRB and to the other party.

   c. The Board will not entertain requests for reconsideration that amount to a renewal of prior argument or additional argument based on facts available at the time of the hearing.

   d. Only one request for reconsideration per dispute from each party will be allowed.

5. Acceptance:

   a. The District and the Contractor shall submit their written acceptance or rejection of the report concurrently to the other party and to the DRB within 14 days of receipt of the report or following receipt of responses to requests for clarification or reconsideration.

   b. Failure by either party to accept or reject within the specified period shall be construed as acceptance of the report by that party.

c. Acceptance by the District of a report on entitlement only, or on entitlement with guidelines for quantum, does not obligate the District to any particular quantum amount.

H. Advisory Opinions:

1. An advisory opinion serves as a method for potentially avoiding a DRB hearing. It is not intended to replace the dispute resolution process specified herein, but may be implemented as part of the good faith negotiations conducted between the parties.

2. When mutually agreed by the District and the Contractor, the DRB may, at its discretion, provide an advisory opinion on any issue.

5.11. Escrow Bid Documents

A. When required by the Special Provisions, Escrow Bid Documents shall be prepared and submitted as specified herein.

5.11.01. Introduction

A. The Escrow Bid Documents shall include complete documentation of all backup information used in the preparation of the Contractor's bid prices for this Project, as described below. The Escrow Bid Documents of the successful bidder will be held in escrow for the duration of the Contract or until all claims are resolved, whichever is later.

B. The Escrow Bid Documents are, and shall always remain, the property of the Contractor, subject to joint review by the District and Contractor, as provided herein.

C. The District stipulates and expressly acknowledges that the Escrow Bid Documents, as defined herein, constitute trade secrets.

1. This acknowledgement is based on the District's express understanding that the information contained in the Escrow Bid Documents is not known outside the bidder's business, is known only to a limited extent and by a limited number of employees of the bidder, is safeguarded while in the bidder's possession, and is extremely valuable to the bidder's competitors by virtue of its reflecting bidder's construction strategies, assumptions and intended means, methods, and techniques of construction.

2. The District acknowledges that the bidder expended substantial sums of money in developing the information included in the Escrow Bid Documents and further acknowledges that it would be difficult for a competitor to replicate the information contained therein.

3. The District further acknowledges that the Escrow Bid Documents and the information contained therein are being provided to District only because it is an express prerequisite to award of the Contract.

4. The District further acknowledges that the Escrow Bid Documents include a compilation of information used in the bidder's business, intended to give the bidder an opportunity to obtain an advantage over competitors who do not know or use the contents of such information.

5. The District further agrees to safeguard the Escrow Bid Documents against disclosure to the fullest extent permitted by law.

D. The successful bidder agrees, as a condition of award of the Contract, that the Escrow Bid Documents constitute all of the information used in the preparation of its bid for this work, and that no other bid preparation information shall be considered in resolving disputes or claims. The successful bidder also agrees that nothing in the Escrow Bid Documents shall change or modify the terms or conditions of the Contract Documents.

5.11.02. Purpose

A. The Escrow Bid Documents will be used solely to assist in the settlement of disputes and claims. They will not be used for pre-award evaluation of the Contractor's anticipated methods of construction nor to assess the Contractor's qualifications for performing the work.

5.11.03. Format and Contents

A. The bidders may submit the Escrow Bid Documents in their usual cost estimating format: a standard format is not required. However, sufficient detail shall be included to ensure that the Escrow Documents enable complete understanding and proper interpretation of their content.

B. The Escrow Bid Documents shall clearly itemize and separate the estimated cost of performing each bid item contained in the bid. Bid items should be separated into sub-items consistent with the Schedule of Values format to present a detailed cost estimate. Crews, equipment, estimated quantities, and the rate of production shall be detailed. Increments of cost shall include, but not be limited to, such items as direct labor, permanent materials, supplies, consumables, subcontracts, equipment charges, and allocations of overheads and profit. Plant, equipment, and indirect costs should be detailed. All costs included in the bid prices must be specifically identified and the methods of application described.

C. The Escrow Bid Documents shall include all quantity take-offs, calculations of rates of production and progress, copies of quotes from subcontractors and suppliers, and memoranda, narratives and all other information used by the bidder to arrive at the prices contained in its bid.

5.11.04. Submittal

A. The Escrow Bid Documents shall be submitted by the three apparent low bidders in a sealed container separate from their proposal no later than 5 P.M. on the first Monday, or Tuesday if Monday is a holiday, following the bid opening day. Each container shall be clearly marked on the outside with the bidder's name, date of submittal, project name, and the words –Escrow Documents."

B. The Escrow Bid Documents shall be accompanied by a separate certification, signed by an individual authorized by the bidder to execute the bidding proposal, stating that the material in the Escrow Documents constitutes all of the documentary information used in preparation of this bid, and that he/she has personally examined the contents of the Escrow Documents container and has found that the documents in the container are complete.

C. The Escrow Bid Documents of the apparent successful bidder will be opened and examined by an appointed member of the District in the presence of the bidder before the Contract is awarded. The apparent successful bidder and applicable subcontractors as stated in paragraph G below shall attend this examination.

D. This examination is to ensure that the Escrow Bid Documents are legible and complete. It will not include a review of, or constitute approval of, proposed construction methods, estimating assumptions or interpretations of Contract Documents. The examination will not alter any condition or term of the Contract. Should the examination indicate that any data is incomplete or missing, the bidder shall supply the missing information within 24 hours or such other time as is mutually agreeable.

E. The timely submittal of complete Escrow Bid Documents is an essential element of the bidding process and a prerequisite to contract award. Failure to provide the necessary Escrow Bid Documents will be sufficient cause for the District to reject the bid as non-responsive.

F. If the Contract is not awarded to the apparent successful bidder, the Escrow Bid Documents of the bidder next to be considered for award shall be processed as described above. The Escrow Bid Documents of the unsuccessful bidders will be held in escrow until such time that they are returned unopened upon execution of the Contract by the successful bidder.

G. If any bidder's proposal is based upon subcontracting any part of this work, each subcontractor, whose total subcontract price exceeds the percentage of the total bid price specified in the Special Provisions, shall provide separate Escrow Bid Documents to be included with those of the bidder. Such documents shall be opened and reviewed in the presence of the subcontractor only in the same manner and at the same time as the review described above for the apparent successful bidder.

H. It is the District's policy, in accordance with State law, that new subcontractors are not accepted after award. However, if the Contractor wishes to lawfully change a subcontractor or lawfully issue an additional subcontract for any portion of this work after award and the District grants a specific exception to this policy, the District retains the right to require the new subcontractor to submit Escrow Bid Documents before the new subcontract is approved.

5.11.05. Storage

A. Upon completion of the examination, receipt of the apparent successful bidder's Escrow Bid Documents will be acknowledged in writing by the District and the documents will be placed in escrow, for the life of the Contract, at an escrow firm within the greater Santa Clara County area chosen by the District. The District will pay for storage and maintenance of the Escrow Bid Documents.

5.11.06. Examination

A. The Escrow Bid Documents may be examined at any time deemed necessary by either the District or the Contractor in order to assist in the settlement of disputes and claims.

B. An examination of the Escrow Bid Documents is subject to the following conditions:

1. As trade secrets, the Escrow Bid Documents are proprietary and confidential.

2. The District and Contractor (and any subcontractor, to the extent Escrow Bid Documents are required by a subcontractor) shall each designate in writing to the other party and seven (7) days prior to any examination, representatives who are authorized to examine the Escrow Bid Documents. With the consent of both the District and the Contractor, members of the Disputes Review Board may participate in the examination of the Escrow Bid Documents. No other person shall have access to the Escrow Bid Documents.

3. Access to the Escrow Bid Documents may take place only in the presence of a duly designated representative of both the District and Contractor. If the Contractor fails to designate a representative or appear for joint examination on seven (7) days notice, then the District representative may examine the Escrow Bid Documents upon an additional three (3) days notice.

5.11.07. Final Deposition

A. The Escrow Bid Documents will be returned to the Contractor after the work has been completed and accepted and all claims and disputes involving this work have been settled. The Contractor will thereupon be required to waive, in writing, any right to lodge further claims involving this work.

5.12. Partnering

5.12.01. Partnering Relationship

A. The District intends to encourage the foundation of a cohesive partnership with the Contractor and its principal subcontractors and suppliers for this Project, and will promote the formation of a partnering relationship with the Contractor in order to effectively complete the Contract to the benefits of both parties.

B. The purpose of the partnering relationship is to maintain a cooperative communication and to mutually resolve conflicts at the lowest responsible management level. It is intended to result in agreements which establish an environment of cooperation between all parties and will allow the Contract requirements to be achieved effectively and efficiently by both the Contractor and the District.

C. The Contractor may request the formation of such a partnering relationship by submitting a request in writing to the Engineer after approval of Contract. If the Contractor's request for partnering is approved by the Engineer, scheduling of a partnering workshop, selecting the partnering facilitator and workshop site, and other administrative details shall be as agreed by both parties.

5.12.02. Implementation

A. If approved, the partnering initiative is to be implemented prior to the preconstruction conference. The Contractor and the Engineer will initiate one two-day partnering development seminar/team building workshop prior to the preconstruction conference. A one-day partnering workshop will be held at every one to two months during construction, or as when needed, as determined by the Engineer and Contractor. Both parties will make arrangements to determine attendees at the workshop, agenda of the workshop, duration, and location. Persons required to be in attendance will be the Engineer and/or the Engineer's authorized agents and key project personnel; the Contractor's authorized representative, on-site project manager and key project supervision personnel of both the prime and principal subcontractors and suppliers; and other personnel as deemed necessary by the District and Contractor.

B. The District will obtain and pay for the services of a partnering facilitator and a meeting room. All other costs associated with the partnering workshops will be borne separately by the party incurring the costs, such as wages and travel expenses, and no additional compensation will be allowed therefore.

C. The establishment of a partnering relationship will not change or modify the terms and conditions of the Contract and will not relieve either party of the legal requirements of the Contract.

5.13. Dust Control

A. During the performance of all work under this Contract, the Contractor shall assume all responsibility for dust control and shall furnish all labor, equipment, and means required to carry out proper and efficient measures wherever and whenever dust control is necessary to prevent operations from producing dust damage and nuisance to persons and property. Any claims resulting therefrom shall be borne solely by the Contractor.

5.14. Excavation Safety Plans

A. Attention is directed to Section 6705 of the Labor Code concerning trench excavation safety plans. Excavations five (5) feet or more in depth shall not begin until the Contractor has submitted and the Engineer has returned indicating ~~"In~~ Receipt Of" the Contractor's detailed plan for worker protection from the hazards of caving ground during such excavations. The plan may be reviewed by the Engineer for completeness in accordance with federal, state, and local regulations. The Engineer will not be responsible for reviewing the accuracy of assumptions, data and information used, and procedures contained in the plan or the adequacy thereof. Such plans shall show the details of the design of shoring, bracing, sloping, or other provisions to be made for worker protection during such excavation. The plan shall not allow the use of shoring, sloping, or a protective system less effective than that required by the Construction Safety Orders; and if such plan varies from the shoring system standards established by the Construction Safety Orders, the plan (including calculations) shall be prepared, signed and stamped by an Engineer registered as a Civil or Structural Engineer, and by an Engineer registered as a Geotechnical Engineer, in the State of California.

B. Such plans shall be accompanied by a copy of the Permit to Excavate that has been issued by the Division of Occupational Safety and Health as required by Labor Code Section 6500 and following.

C. This Article shall be applicable regardless of Contract price.

5.15. Asbestos-Related Work

A. The Contractor's attention is directed to Section 7058.5 of the Business and Professions Code which states that from and after January 1, 1987, no Contractor shall engage in asbestos-related work, as defined, who is not certified by the Contractor's State License Board to do so.

B. The Contractor's attention is also directed to Section 6501.5, and following, of the Labor Code relative to asbestos-related work and to provisions of the General

Industry Safety Orders of Title 8 of the Code of Regulations and to the BAAQMD's Regulation 11, Rule 2.

5.16. Substitutions

A. If a specific means, method, technique, sequence, or procedure of construction is indicated in or required by the Contract Documents, the Contractor may furnish or utilize a substitute means, method, sequence, technique, or procedure of construction acceptable to the Engineer, if the Contractor submits sufficient information to allow the Engineer to determine that the substitute proposed is equivalent to that indicated or required by the Contract Documents.

B. The Engineer will respond in writing to the Contractor within 10 days indicating the time necessary to evaluate each proposed substitute. The Engineer will be the sole judge of acceptability, and no substitute will be ordered, installed, or utilized without the Engineer's prior written acceptance, which will be evidenced by either a change order or an approved shop drawing. The District may require the Contractor to furnish at the Contractor's expense a special performance guarantee or other surety with respect to any substitute.

C. The Engineer will record time required by the Engineer and the Engineer's consultants in evaluating substitutions proposed by the Contractor and in making changes in the Contract Documents occasioned thereby. Regardless of whether or not the Engineer accepts a proposed substitute, the Contractor shall reimburse the District for the charges of the Engineer and Engineer's consultants for evaluating each proposed substitute.

D. Cost or time impacts to other items of Contract work which are caused by any Contractor initiated request for substitution, whether anticipated or unforeseen, shall be the responsibility of the Contractor.

E. Contractor's attention is directed to Article 10.06 – Equal, Sole or Single Source, and Substitutions.

SECTION 6. LEGAL RELATIONS AND RESPONSIBILITY

6.01. Laws to be Observed

A. The Contractor shall remain informed of and in compliance with applicable existing and future federal, state, county, and municipal laws, ordinances, rules and regulations, including but not limited to, those cited herein.

6.02 Equal Opportunity Requirements

A. The Santa Clara Valley Water District is an equal opportunity employer and requires its contractors to have and adhere to a policy of equal opportunity and non-discrimination. In the performance of the Contract, the Contractor will comply with all applicable federal, state, local laws and regulations, and will not discriminate against any subcontractor, employee, or applicant for employment, in the recruitment, selection for training including apprenticeship, hiring, employment, utilization, promotion, layoff rates of pay, or other forms of compensation, or against any other person, on the basis of race, color, religion, ancestry, gender, national origin, age (over 40), marital status, medical condition (including cancer), pregnancy, parental status, the exercise of family care leave rights, political affiliation, sexual orientation, gender identity, special disabled veteran status, Vietnam Era veteran and all other Veteran status, or because of a physical or mental disability (including HIV and AIDS). The Contractor's policy must conform with applicable state and federal guidelines including the Federal Equal Opportunity Clause, ~~"~~Section 60-1.4 of Title 41, Part 60 of the Code of Federal Regulations," Title VII of the Civil Rights Act of 1964 as amended; the American's with Disabilities Act of 1990; the Rehabilitation Act of 1973 (sections 503 and 504); California Fair Employment and Housing Act (Government Code section 12900 et. Seq.); California Labor Code sections 1101and 1102.

6.03. Employment of Labor

A. In the employment of labor in the performance of the Contract, the District desires that the Contractor and all subcontractors shall, wherever possible, give first consideration to residents of the District.

6.04. Prevailing Wages

A. The Work to be performed pursuant to this contract is ~~"~~public works" subject to California Labor Code Section 1771, et. seq. and the applicable implementing regulations. The General Prevailing Wage Rates issued by the California Department of Industrial Relations may be adjusted by the State during the term of this contract. Notwithstanding any other provisions of this Contract, Contractor will not be entitled to any adjustment in compensation in the event there are adjustments to the General Prevailing Wage Rates.

1. In accordance with provisions of Section 1773 of the Labor Code, the Director of the Department of Industrial Relations has ascertained the general prevailing rate of wages and employer payments for health and welfare, pension, vacation, and similar purposes available to the

particular craft, classification, or type of workers employed on the work. These rates are set forth in the latest determination obtained from the Director, which is on file in the office of the Clerk of the Board of Directors and incorporated herein by reference the same as though set out in full. The rates are also available on the State of California Department of Industrial Relations website at http://www.dir.ca.gov.

2. The Contractor shall forfeit as a penalty to the District, $50 for each day, or portion thereof, for each worker paid less than the stipulated prevailing rates for any public work done under the Contract by the Contractor or by any subcontractor in violation of the provisions of the Labor Code, particularly Sections 1770 through 1780, inclusive.

B. Each Contractor and Subcontractor shall keep an accurate payroll record, showing the name, address, Social Security number, work classification, straight time and overtime hours worked each day and week, and the actual per diem wages paid to each journeyman, apprentice, worker, or other employee by him or her in connection with the public work. The payroll records shall be certified and shall be available for inspection at all reasonable hours at the principal office of the Contractor in accordance with the provisions of Section 1776 of the Labor Code.

1. Contractor and each Subcontractor must, pursuant to California labor Code §1776, submit a certified weekly payroll within ten (10) Days after the Owner's request for submission of certified weekly payroll records. The certified payroll must include the date of actual payment of wages for each worker employed on the project and a breakdown of each payment including all fringe benefits included in such wage for each worker.

2. Pursuant to California labor code §1776, in the event that the Contractor fails to comply with the 10-day submission deadline, the contractor must forfeit twenty-five dollars ($25) for each calendar day, or portion thereof, of each worker, until strict compliance is effectuated.

3. The Contractor shall inform the District of the location of the payroll records, including the street address, city, and county, and shall, within 5 working days, provide a notice of a change in location and address. The responsibility for compliance with payroll record requirements imposed by said Section 1776 of the Labor Code is on the prime Contractor.

C. The Contractor must submit certified weekly payroll(s) in support of the monthly request for payment as required in Article 8.03. Certified weekly payroll(s) must be submitted within 10 calendar days from the progress payment end date. Payroll(s) shall contain the full name, address, and Social Security number of each employee, his or her correct classification, rate of pay, daily and weekly number of hours worked, itemized deductions made, and actual wages paid. They shall also indicate apprentices and ratio of apprentices to journeymen. The employee's address and Social Security number need only appear on the first payroll on which his or her name appears. The payroll shall be accompanied by

a ―Statement of Compliance" signed by the employer or agent indicating that the payrolls are correct and complete and that the wage rates contained therein are not less than those required by the Contract. The ―Statement of Compliance" shall be on forms furnished by the District or on any form with identical wording. The Contractor shall be responsible for the submission of copies of payrolls of all subcontractors.

1. The District will take all actions reasonably necessary to enforce the prevailing wage requirements of this contract including retaining progress payment funds not supported by certified payroll(s).

2. Retentions for failure to submit satisfactory payrolls are in addition to all other retentions provided for in the Contract.

D. The Contractor and each subcontractor shall preserve their respective payroll records for a period of 4 years from the date of filing a Notice of Completion and Acceptance under the Contract.

1. The work of installing, assembling, repairing or reconditioning, or other work of any nature on machinery, equipment, or tools used in or upon the work, is considered a part of the work to be performed under the Contract and any laborers, workers, or mechanics working on such machinery, equipment, or tools, are subject to all of the requirements relating to labor set forth in the Contract.

2. The construction, erection, and operation of material production, proportioning, or mixing plants from which material is used wholly on the Contract or on contracts under the supervision of the District, shall be considered a part of the work to be performed under the Contract and any laborers, workers, or mechanics working on such plants shall be subject to all of the requirements relating to labor set forth in the Contract.

6.05. Hours of Labor

A. Eight hours' labor constitutes a legal day's work. The Contractor shall forfeit as a penalty to the District, $25 for each worker employed in the execution of the Contract by the Contractor or by any subcontractor for each day during which such worker is required or permitted to labor more than 8 hours in violation of Labor Code Sections 1810 to 1815, inclusive, except as provided for under Labor Code Section 1815.

6.06. Apprentices

A. The Contractor's attention is directed to the provisions in Sections 1777.5, 1777.6, and 1777.7 of the Labor Code concerning the employment of apprentices by the Contractor or any subcontractor.

B. Section 1777.5 requires the Contractor or subcontractor employing persons, as defined, in any apprenticeable occupation to apply to the joint apprenticeship

committee which is nearest the site of the public works project and which administers the apprenticeship program in that trade for a certificate of approval. The certificate will also fix the ratio of apprentices to journeymen that will be used in the performance of the Contract. The ratio of work performed by apprentices to journeymen in such cases shall not be less than 1 hour to 5 hours, except when the committee finds that any one of the following conditions is met:

1. In the event unemployment for the previous 3-month period in the project site area exceeds an average of 15 percent, or

2. In the event the number of apprentices in training in such area exceeds a ratio of 1 to 5, or

3. If there is a showing that the apprenticeable craft or trade is replacing at least one-thirtieth of its journeymen annually through apprenticeship training, either (1) on a statewide basis, or (2) on a local basis, or

4. If assignment of an apprentice to any work performed under a public works contract would create a condition which would jeopardize his/her life or the life, safety, or property of fellow employees or the public at large, or if the specific task to which the apprentice is to be assigned is of such a nature that training cannot be provided by a journeyman.

C. The Contractor is required to make contributions to funds established for the administration of apprenticeship programs if the Contractor employs registered apprentices or journeymen in any apprenticeable trade on such contracts and if other contractors on the public works site are making such contributions.

D. The Contractor and any subcontractor shall comply with the requirements of Sections 1777.5 and 1777.6 in the employment of apprentices.

E. Information relative to apprenticeship standards, wage schedules, and other requirements may be obtained from the Director of Industrial Relations, ex officio the Administrator of Apprenticeship, San Francisco, California, or from the Division of Apprenticeship Standards and its branch offices.

6.07. Permits and Licenses

A. The Contractor shall procure all permits and licenses, pay all charges and fees, and give all notices necessary and incident to the prosecution of the work, except as provided in the Special Provisions.

6.08. Patents and Copyrights

A. The Contractor shall assume all costs including any costs of defense arising from the use of any copyrighted composition, secret process, patented or unpatented invention, article, equipment, device, or appliance manufactured, furnished, or used in the performance of the Contract, including their use by the District, unless otherwise specifically stipulated in the Specifications.

6.09. Public Safety

A. The Contractor shall be solely and completely responsible for conditions of the jobsite including safety of all persons and property during the performance of the work, except from District's sole negligence or intentional misconduct. Contractor's compliance with this requirement is not limited to normal working hours.

B. At all times the Contractor shall provide for public safety and convenience. The Contractor's operations shall be conducted so as to offer the least possible obstruction and inconvenience to the public along with the greatest safety to the public. At no time shall the Contractor have more work underway than can be prosecuted with proper regard to these considerations to the public.

C. The Contractor shall furnish, erect, and maintain such fences, barriers, lights, and signs and provide such flagging and guards as are necessary in the opinion of the Engineer or public agency having jurisdiction, to give adequate warning to the public of the construction and of any dangerous condition to be encountered as a result thereof.

6.10. Accident Prevention

A. The Contractor shall comply with the California Occupational Safety and Health Act (Labor Code Section 6300 et seq.) and Title 8 of the Code of Regulations, and will also take, or cause to be taken, such additional measures as may be necessary for the prevention of accidents.

B. Prior to commencement of work the Contractor shall (1) submit proposals in writing for effectuating provisions for accident prevention, and (2) meet in conference with the Engineer to discuss and develop mutual understandings relative to administration of an overall safety program.

C. During the performance of work under the Contract, the Contractor shall institute controls and procedures for the control and safety of persons visiting the jobsite.

D. The Contractor shall maintain an accurate record of, and shall report to the Engineer in writing, exposure data and all accidents resulting in death, traumatic injury, occupational disease, or damage to property, materials, supplies, or equipment incident to work performed under the Contract.

E. The Engineer will notify the Contractor of any noncompliance with the foregoing provisions. The Contractor shall, after receipt of such notice, immediately take corrective action. If the Contractor fails or refuses to comply immediately, the matter will be referred to the proper authority. No part of the time lost due to any stop order issued by proper authority shall be made the subject or claim for extension of time or for extra costs or damages by the Contractor.

F. Compliance with the provisions of this Article by subcontractors will be the responsibility of the Contractor.

6.11. Explosives and Stream Pollution

A. When the use of explosives is necessary for the prosecution of the work, the Contractor shall not endanger life or property.

B. All explosives shall be stored in accordance with the provisions of Division XI of the Health and Safety Code and applicable county and city ordinances.

C. Attention is called to the necessity of obtaining a permit from the Department of Fish and Game of the State of California in advance of use of underwater explosives. Attention is directed to the Fish and Game Code relating to stream pollution, particularly Section 5650.

6.12. Fires

A. The Contractor shall obtain any necessary fire permits from the properly constituted authority and comply with all regulations of the BAAQMD.

6.13. Interference With Fire Hydrants, Highways, and Fences

A. The Contractor shall conduct operations as not to close or obstruct any portion of any highway, road, or street, or prevent in any way free access to fire hydrants until permits have been obtained therefor from the proper authorities. If any highway required to be kept open shall be rendered unsafe by the Contractor's operations, the Contractor shall make such repairs or provide such temporary guards as shall be acceptable to the authorities having jurisdiction and to the Engineer. Any highway or street maintenance or repair work required by local authorities in connection with necessary operations under the Contract shall be performed by the Contractor at the Contractor's own cost and expense. Fences subject to interference shall be maintained as effective barriers consistent with the original intent but, upon approval of the Engineer, they may be moved or rearranged to facilitate prosecution of the work until the work is finished, after which they shall be restored to their original location in an equal or better condition that existed prior to rearrangement.

6.14. Preservation of Property

A. Due care shall be exercised to avoid damage to existing improvements, utility facilities, and adjacent property, real and personal. The fact that any existing underground improvement or facility is not shown on the Drawings shall not relieve the Contractor of responsibility to ascertain the existence of any underground improvement or facility which may be subject to damage by reason of the Contractor's operations.

B. Any damage to improvements or property, whether above or below the ground, private or public, within or adjacent to the project limits, arising from, or in consequence of, the performance of the Contract shall be repaired at once by the Contractor. If the Engineer requires such repair to be made prior to the execution or continued performance of any part of the work included in this

Contract, the Engineer will so notify the Contractor who shall delay or discontinue the performance of that part of the work until the necessary repair has been made. Such delay shall not be considered unavoidable, and no extension of time for completion of the Contract will be allowed therefor.

C. When ordered by the Engineer to make any such repair, the Contractor shall start work thereon within four (4) hours and shall prosecute the same with diligence to completion. Upon failure of the Contractor to so comply with such order, or upon the Contractor's failure to make immediate emergency repairs reasonably determined by the Engineer to be necessary in the best interests of the public, the Engineer shall have authority to cause such repair to be made and to deduct the costs thereof from any money due, or which may become due, the Contractor.

D. In an emergency affecting the safety of life or property including adjoining property, the Contractor shall act to prevent, to the extent possible, such threatened loss or injury, whether or not instructed to do so by the Engineer.

6.15. Contractor's Responsibility for Work

A. Until the formal acceptance of the work, the Contractor shall have the charge and care of the work and of the materials to be used therein, and shall bear the risk of injury, loss, or damage to any part thereof by the action of the elements or from any other cause, whether arising from the execution or from the nonexecution of the work. The materials to be used in the work include both those furnished by the District and those furnished by the Contractor, including materials for which the Contractor has received partial payment as provided in Article 8.03.

6.16. Indemnification

A. The Contractor shall defend, indemnify and save harmless the District and its Directors, officers, employees, and agents from liability, loss, suits, actions, or claims brought for or on account of violation of laws, ordinances, rules or regulations, or injury, damage, or loss including death caused by acts or omissions of the Contractor, its employees, or agents.

6.17. Contractor's Insurance

6.17.01. General

A. No Contract between the parties is formed until all insurance required by this Article has been obtained and such insurance and insurers have been approved by the District. The insurance procured by Contractor for the benefit of Santa Clara Valley Water District shall not be deemed to release or limit any liability of Contractor. Damages recoverable by Santa Clara Valley Water District for any liability of Contractor shall, in any event, not be limited by the amount of the required insurance coverage. Any delay in the commencement of work beyond the date of the first chargeable day in the Notice to Begin Work, caused by the Contractor's failure to comply with the insurance requirements specified in these

Specifications, is the responsibility of the Contractor. Failure by the Contractor to maintain all required insurance at all times during the performance of this Contract, and until acceptance by the District, shall, at the discretion of the District, result in temporary suspension of work, or termination of control, or termination of contract in accordance with Articles 7.05, 7.07, 7.08 respectively, and shall not be a basis for a time extension. Contractor's insurance shall be primary with respect to any other insurance which may be carried by Santa Clara Valley Water District.

B. The District has the right to require Contractor to provide complete, certified copies of all required pertinent insurance policies, including endorsements affecting the coverage required by the Agreement.

C. The specific insurance requirements and coverages shall be in accordance with the Special Provisions.

6.17.02. Insurance on Work and Materials

A. The Contractor shall secure and maintain such direct damage insurance against such perils as the Contractor may deem necessary to protect the work called for in this Contract, including work completed, material in place or to be used in the performance of this Contract, and such other miscellaneous items as may be necessary to the performance of this Contract.

6.18. Payment of Taxes

A. Except as otherwise specifically provided in the Special Provisions, the Contract prices shall include full compensation for all current and future taxes which the Contractor is required to pay, whether imposed by federal, state, or local government, and no tax exemption certificate or any other document designed to exempt the Contractor from payment of tax will be furnished to the Contractor by the District.

6.19. Cooperation With Others

A. The District reserves the right to do other work on or near the project. The Contractor shall cooperate with others and conduct work so as to facilitate work by the District or others and prevent delay, additional expense, or hindrance thereto. The Contractor shall request from, and exchange with others, Drawings, data, and information as necessary to insure proper completion of the project and work of others. The Contractor shall furnish copies of correspondence and Drawings exchanged with other contractors to the Engineer.

B. The Contractor shall conduct, adjust, correct, and coordinate work with work of others so that the project shall be free of defects.

6.20. Property Rights in Materials

A. Nothing in the Contract shall be construed as vesting in the Contractor any right of property in the materials used after they have been attached or affixed to the work or the soil, or after payment has been made for 90 percent of the value of materials delivered to the site of the work, whether or not they have been so attached or affixed. All such materials shall become the property of the District upon being so attached or affixed or upon payment of such 90 percent of the value of materials delivered by the Contractor on the ground and not used, as provided in Article 8.03.

6.21. Rights in Land and Improvements

A. Nothing in these Specifications shall be construed as allowing the Contractor to make any arrangements with any person to permit occupancy or use of any land, structure, or building within the limits of the Contract for any purpose whatsoever, either with or without compensation, in conflict with any agreement between the District and any owner, former owner, or tenant of such land, structure, or building.

6.22. Title to Materials Found on the Work

A. The title to all water and to the right to the use of all water, to all soil, stone, gravel, sand, minerals, and all other materials developed or obtained in the excavation or other operations by the Contractor or any subcontractor, or any of their employees, and the right to use or dispose of the same, are hereby expressly reserved by the District, and neither the Contractor, nor any subcontractor, nor any of their employees shall have any right, title, or interest in, or to any part thereof; neither shall they, nor any of them, assert or make any claim thereto. The Contractor may be permitted to use in the work, without charge, any such materials which meet the requirements of these Specifications.

6.23. Trespass

A. The Contractor shall be responsible for all damage or injury which may be caused on any property by trespass by the Contractor, any subcontractor, or their employees in the course of their employment, whether the said trespass was committed with or without the consent or knowledge of the Contractor.

6.24. Subcontracting

A. The Contractor shall comply with Subletting and Subcontracting Fair Practices Act commencing with Section 4100 of the Public Contract Code. Violations shall subject Contractor to penalties described in the Act.

B. In accordance with Section 4107 of the Public Contract Code, the Designated Engineer is an authorized officer to act for the Board for the purposes of consenting to a substitute subcontractor.

6.25. Tunnel Construction Safety

A. Attention is directed to Labor Code Sections 7950 and following, concerning tunnel safety. The Contractor shall notify the Division of Occupational Safety and Health and the Engineer before any initial construction may be started at any tunnels. A prejob safety conference, to be arranged for by the Contractor, shall be held for all underground operations. The Engineer shall be notified of the time and place of such conference. The tunnel classification prepared by the Division of Occupational Safety and Health shall be prominently posted at the site by the Contractor. The District will obtain this classification prior to the request for bids, whenever possible, and make it available to the Contractor.

6.26. Assignment of Antitrust Claims

A. Sections 4550 through 4554 of the Government Code pertaining to the assignment of antitrust claims are incorporated herein in full by this reference.

6.27. Burial Sites

A. Pursuant to Ordinance Code Section B6-18 of the County of Santa Clara and requirements of Public Resources Code Section 5097.94 and Health and Safety Code Section 7050.5, upon discovering or unearthing any burial site as evidenced by human skeletal remains, the person making such discovery shall immediately notify the County Coroner. The Contractor shall also notify the Engineer. The Contractor shall immediately secure the site and protect any human remains from further disturbance.

B. Upon determination by the County Coroner that the remains are Native American, the Coroner will contact the California Native American Heritage Commission and the County Coordinator of Indian Affairs. No further excavation or disturbance within 30 feet of the site or of any nearby area reasonably suspected to overlie adjacent remains may be made except as authorized by the California Native American Heritage Commission and/or the County Coordinator of Indian Affairs.

C. The Contractor is advised that if burials are encountered, it may be necessary to suspend work on the project in order to comply with the above requirements. Payment for a delay of more than 1 working day for each occurrence will be made in accordance with Article 5.04 and Article 5.05.

6.28. Delay Due to Archeological Discovery

A. The Contractor is advised that if archeological artifacts are encountered, it may be necessary to suspend work on the project in order to comply with this Article.

B. Work in areas where artifacts are found shall be restricted or stopped as directed by the Engineer until proper protocols are met.

C. Work at the location of the find shall halt immediately within 30 feet of the find. If an archaeologist is not present at the time of the discovery, the Engineer will contact an archaeologist for identification and evaluation pursuant to Section 21083.2 of the Public Resources Code, Section 15126.4 of the California Code of Regulations (California Environmental Quality Act [CEQA] Guidelines), and the mitigation measures of the project CEQA document. If the archaeologist determines that the artifact is not significant, the Engineer will authorize the Contractor to resume construction.

D. If the archaeologist determines that the artifact is significant, the archaeologist will determine if the artifact can be avoided and, if so, will detail avoidance procedures. The Contractor shall comply with these avoidance procedures.

E. If the artifact cannot be avoided, the archaeologist will develop within 48 hours an Action Plan which will include provisions to minimize impacts and, if required, a Data Recovery Plan for recovery of artifacts in accordance with Public Resources Code Section 21083.2 and Section 15126.4 of the CEQA Guidelines.

F. The Contractor shall delay work until the Action Plan and, if required, the Data Recovery Plan, are approved by the Engineer. Once the Action Plan and the Data Recovery Plan are approved, the Contractor shall comply with the requirements of these plans.

G. Payment for a delay of more than 1 working day for each occurrence will be made in accordance with Article 5.04 and 5.05.

6.29. Noise Pollution and Vibration

A. The Contractor shall be responsible for ensuring that noise produced by construction activities does not exceed the applicable local noise ordinance standards and is in compliance with the performance standards set forth in the Special Provisions.

B. At a minimum, the Contractor shall exercise precautionary measures listed below. Installation of these measures shall in no way relieve the Contractor of the responsibility of compliance with the noise criteria.

1. Air compressors and internal combustion engines shall be in good operating condition that meet or exceed original factory specifications and shall be equipped with high-grade mufflers, air-inlet silencers, where appropriate, and noise suppressers.

2. All mobile or fixed noise producing machinery and equipment, including ~~p~~package" equipment such as fans, cranes, arc-welders, air compressors, electrical operators and the like, shall be suitably housed, enclosed, shielded, equipped with noise control features, or muffled to meet the noise limits specified in the Special Provisions.

3. All mobile or fixed noise producing equipment used by the Contractor that is regulated for noise output by local, state, or federal law shall comply with such regulation while in use. This shall include vehicles licensed for use on public highways.

4. Electrically-powered equipment instead of pneumatic or internal combustion powered equipment shall be used, where feasible.

5. The use of noise-producing signals, including horns, whistles, alarms, and bells shall be for safety warning and emergency purposes only.

6. No music system including personal or vehicle radio, tape, or CD players or the like shall be audible at the Project right of way line.

7. Trucks or other mobile equipment shall not use engine decompression (~~J~~ake Brakes") for deceleration on grades, where feasible.

C. The Contractor shall take all necessary precautions during its operations to limit peak particle velocities from vibratory compaction or percussion equipment so that they do not become a public nuisance or result in property damage.

D. Any equipment causing incompliance with the noise or vibration criteria shall be removed from the job site as directed by the Engineer.

6.30. Air Pollution

A. Attention is directed to the BAAQMD and California Air Resources Board regulations. No burning will be allowed on this Project. Idling of internal combustion engines shall be held to an absolute minimum. All vehicles with internal combustion engines shall be fitted with spark arresters.

B. Rapid-cure cutback asphalt shall not be used in accordance with BAAQMD, Regulations 8, Rule 15.

C. Asbestos-containing serpentine material, as defined in the BAAQMD, Regulations 11, Rule 14, and 17 CCR 93106, shall not be used for surfacing.

D. Except as provided by law, idling of heavy duty diesel trucks with gross vehicular weight ratings of greater than 10,000 pounds shall be no more than 5 minutes per 13 CCR 2485.

6.31. Spillage and Dust

A. Care shall be taken to prevent spillage when hauling is done. Spillage resulting from hauling operations along or across any public traveled way shall be removed immediately by the Contractor. The Contractor shall pay all expenses for removal of spillage.

B. Dust nuisances originating from the Contractor's operations either inside or outside the right of way shall be controlled at the expense of the Contractor in accordance with Article 5.10.

C. The Contractor shall provide all necessary precautionary measures to control dust and to prevent spillage on public traveled ways. At a minimum, the Contractor shall provide the measures listed below. Implementation of these measures shall in no way relieve the Contractor of the responsibility to comply with these Specifications.

1. Active maintenance areas, unpaved access roads, and staging areas shall be kept sufficiently moist, and watered as necessary, or shall be applied with non-toxic soil stabilizers, to control dust generation.

2. Trucks hauling sediments and other loose material shall be covered and shall maintain at least 6 inches of freeboard.

3. Tailgates of trucks shall be sealed.

4. If deemed necessary, trucks shall be brushed down before leaving the site.

5. Paved site access roads shall be swept using vacuum powered street sweepers when visible soil material is carried onto the roadway.

6. Water the excavation and grading activity during high winds, or suspend the activity, if necessary, to control dust.

7. Inactive areas shall be sprayed with soil stabilizer or seeded to avoid erosion or dust.

8. Exposed stockpiles shall be watered, enclosed, covered, or sprayed with soil stabilizers.

9. Traffic speeds within the project right of way shall be limited to 15 mph. For off-site restriction, comply with local agencies' requirements.

10. Sandbags or other bank protections shall be installed to prevent silt runoff to roadways.

D. Contractor shall immediately remedy any spillage and dust nuisance or deficiency arising from, or in consequence of Contractor's failure to perform the work specified in these Specifications.

E. Upon the Contractor's failure to make timely remedies determined by the Engineer to be necessary and in the best interests of the public, the Engineer may employ private or public work forces and equipment to perform the work. The actual cost of employing such forces and equipment shall be doubled and then subtracted from the monies due, or that may become due, the Contractor.

Such action(s) taken by the Engineer shall not preclude the District from taking other actions as deemed appropriate, and shall not relieve the Contractor of responsibility to comply with these Specifications.

6.32. Traffic Control

A. Traffic control shall consist of all work and materials necessary to maintain safe vehicular, pedestrian, and cyclist traffic during construction and to perform ~~"~~best management practices" to mitigate high peak and high volume construction traffic, prevent idling and queuing, establish site access limitations and mitigation measures, identify haul routes, and provide overall control of all construction traffic entering and exiting and operating within the project site.

B. All traffic control work shall be performed in accordance with the requirements of the local agency having jurisdiction and the State Specifications. If required, the Contractor shall prepare a traffic control plan in accordance with these Specifications, and submit to the Engineer and the local agency having jurisdiction for review in advance of the work at the site.

C. The Contractor shall cooperate with the local agency having jurisdiction relative to handling traffic around the construction area. The Contractor shall make his/her own arrangements relative to keeping the working area clear of parked vehicles to maintain sight visibility and access to adjacent properties. Existing road signs shall not be blocked at any time.

D. Truck traffic and haul routes shall be in compliance with local permits and ordinances. The Contractor shall obtain, at Contractor's expense, any required ~~"~~Haul Route Permit" from the local authority having jurisdiction for transporting to and from the project site construction materials and disposal of surplus materials.

E. The Contractor shall conduct his/her operations and schedule cleanups to cause the least possible obstruction and inconvenience to traffic, pedestrians, cyclists, and adjacent property owners.

F. Damage done by the Contractor during the course of his/her work to adjacent city, town, county, or private property shall be repaired or replaced in kind and as directed by the Engineer.

G. Personal vehicles of the Contractor's employees, and the Contractor's equipment and vehicles shall not be parked on the traveled way, shoulders, medians or lanes which have not been approved for closure, at any time. When entering or leaving roadways carrying public traffic, the Contractor's equipment, whether empty or loaded, shall in all cases yield to public traffic and shall travel in the direction of the traffic. Flaggers and traffic signs may be required to control this activity. No driveways or private roads shall be blocked. Safe access must be maintained for pedestrian traffic throughout the work areas at all times.

H. Those parts of public streets, rights of way, and sidewalks that are occupied by the Contractor shall be immediately vacated by him/her and returned to public use when his/her use thereof is no longer necessary for the construction work.

I. Attention is directed to Section 7-1.08, ―Public Convenience"; Section 7-1.09, ―Public Safety," and Section 12, ―Construction Area Traffic Control Devices," of the State Specifications and Article 6.09, ―Public Safety," of these Standard Provisions Specifications. Nothing in these Specifications shall be construed as relieving the Contractor from his/her responsibility as provided in said Section 7-1.09, ―Public Safety," of the State Specifications.

J. The Contractor shall coordinate with the appropriate local agencies having jurisdiction to receive their approval in the event any temporary lane closures on public streets are needed for the Contractor's operation. Any such traffic signing and flaggers as approved by the local agencies for said lane closure shall be in place prior to closing the lane to traffic.

6.33. Water Quality

A. The Contractor shall meet all applicable regulatory requirements to ensure that any discharges to surface waters will not cause violation to the State water quality objectives or violation of regulatory permits issued by regulatory agencies.

B. The Contactor shall prevent water quality degradation of water bodies and/or storm drains. Water quality is measured in terms of pollution substances, turbidity, dissolved oxygen, pH, and temperature.

C. Oily, greasy, or sediment laden substances or other materials that originate from the Contractor's operation and may degrade the quality of surface water or adversely affect aquatic life, fish, or wildlife shall not be allowed to enter, or be placed where they may later enter, any reservoir, river, creek, or stream.

D. The Contractor shall comply with the requirements of the following permits, where applicable, as specified in the Special Provisions:

1. State Water Resources Control Board (SWRCB) National Pollutant Discharge Elimination System (NPDES) General Permit for Storm Water Discharges Associated with Construction and Land Disturbance Activities.

2. U.S. Army Corps of Engineers CWA Section 404 Permit and Regional Water Quality Control Board/State Water Resources Control Board CWA Section 401 Water Quality Certification.

3. Other individual RWQCB NPDES Permits.

4. Department of Fish and Game 1602 Stream Bed Alteration Agreement.

6.34. Regulated Material Management

A. Regulated material includes, but not be limited to, hazardous material and hazardous waste.

B. The Contractor is responsible, and shall obtain all required permits and pay all fees and taxes, for satisfying the requirements of any regulatory agency for the storage, monitoring, usage, transportation, safety, reporting, or any other requirements regarding the management of regulated materials on and off the project site(s).

C. The Contractor shall not allow regulated materials to spill on District property or easements or other public or private right of way. Any spillage of regulated materials resulting from the Contractor's operation shall be removed immediately by the Contractor at the Contractor's expense.

D. The Contractor shall immediately notify the Engineer of any potentially hazardous materials or hazardous waste encountered at the work site and shall take all necessary action to prevent exposure of personnel until all material is identified and proper action can be taken.

6.34.01. Storage of Regulated Materials

A. Prior to the storage or use of any regulated materials, the Contractor shall submit to the Engineer a "Regulated Materials Storage and Use Plan" (Plan). The Plan shall include: an inventory of all regulated materials to be stored or used at the project site (which equals or exceeds any of the following separate material phases: 55 gallons liquid, 200 cubic feet of compressed gas, or 500 lbs. solid); the maximum quantity of materials to be stored; the purpose of the materials; the MSDS for each material; a detailed description of how the materials will be stored (including secondary containment where required by applicable regulatory agencies); a site plan drawn to scale; storage area maps drawn to scale; a detailed description of how the materials will be monitored; a detailed description of how wastes from the materials will be stored and/or disposed; and a detailed description of the procedures to be followed in the event of an uncontrolled release of the regulated materials.

B. The Plan shall be submitted to the Engineer for review, in accordance with Article 9.02, and acceptance at least 30 days prior to the storage or use of any regulated materials. The Plan shall be updated and submitted to the Engineer by the Contractor upon the addition of new regulated material not listed previously or a 100 percent (or greater) increase in quantity of a regulated material which is listed in the Plan.

6.34.02. Regulated Material Discharges or Releases

A. The Contractor is responsible for all discarded or abandoned material, including regulated materials and hazardous wastes, generated as a result of the

Contractor's operations unless specifically noted otherwise in these Specifications. The Contractor's attention is directed to Article 5.06.

B. In the event of a discharge or release of a regulated material from the Contractor's operation, the Contractor is responsible for notifying the proper authorities, providing containment of the material, identifying the contaminants, investigating the extent of all contaminants, testing and removing contaminated materials, disposing of contaminated materials, and verifying the removal of all contaminated materials. These activities shall be performed to the satisfaction of the Engineer at the Contractor's cost. The Contractor shall perform any work and provide any and all documentation required by the District and federal, state, and local agencies. The Contractor shall provide copies of all correspondence and reports related to these activities to the Engineer. All work performed to accomplish these activities shall be in accordance with federal, state, and local regulations.

C. In the event of a discharge or release of regulated material, the Contractor shall notify the Engineer immediately. Immediate notifications may be verbal. The Contractor shall submit a detailed written report to the Engineer within 24 hours of the discharge or release. The written report shall include: a description of events leading to the discharge or release; action taken to prevent or control the discharge or release; a description of the discharge or release; the quantity of material discharged or released; method used to determine quantity discharged or released; type of material discharged or released; MSDS for the material(s) involved; a description of the area affected by the discharge or release; agencies notified and date and time of notification; and status of the cleanup. The report shall also include the proposed investigation, cleanup, and verification sampling activities.

D. All expenses incurred by the Contractor as a result of or to remedy the discharge or release of regulated materials shall be borne solely by the Contractor and no additional compensation will be made therefor. The Contractor shall be responsible for signing the Nonhazardous Waste Manifests and the Hazardous Waste Manifests and paying the State Superfund fees, the generator's fees, and other costs of disposal of these wastes unless specifically stated otherwise in these Specifications. The Contractor shall be identified as the owner and generator of the wastes associated with unauthorized releases or discharges.

6.34.03. Hazardous Waste

A. The Contractor shall manage the hazardous wastes generated from this operation in accordance with the Specifications below:

1. Labeling: The Contractor shall completely fill out and affix a ―Hazardous Waste" label to each hazardous waste container for the Contractor's operations. Each ―Hazardous Waste" label shall contain, at a minimum, the word ―HAZARDOUS WASTE," information on the generator (i.e., name, address, phone number), EPA identification number for the waste stream, EPA, and/or California waste code, waste accumulation starting

date, identification, and content of the waste, the physical state of the waste (i.e., solid or liquid), and the hazardous property (i.e., flammable, toxic, corrosive, reactive, or other). If the primary container is placed inside a secondary container, then the Contractor shall also prepare and affix another ~~"~~Hazardous Waste" label on the secondary container.

2. Secondary Containment: The Contractor shall provide appropriate secondary containment for all storage areas for hazardous materials and hazardous wastes. In the case of an installation with one primary container, the secondary containment shall contain at least 110 percent of the volume of the primary container. In the case of an installation with multiple primary containers, the secondary containment shall contain 150 percent of the volume of the largest container or 10 percent of the aggregate internal volume of all primary containers in the storage facility—whichever amount is greater. If the storage facility or storage system is open to rainfall, then the secondary containment must be able to additionally accommodate the volume of a 24-hour rainfall as determined by a 25-year storm history.

3. Accumulation Time Limit: The Contractor shall properly haul and dispose of all hazardous waste within 90 days from the accumulation starting date identified on each ~~"~~Hazardous Waste" label or on the completion date of the Contract—whichever event comes first. The waste accumulation starting date for each waste stream begins when a first drop of the waste is placed in the container.

4. Hauling and Disposal of Waste: The Contractor shall be responsible for using appropriate hazardous waste haulers and disposing of all hazardous wastes in accordance with local, state, and federal regulations.

B. Waste Manifests: No later than 15 days after Contractor's request for final inspection, the Contractor shall submit copies of all Hazardous Waste Manifests signed by disposal facilities and certificates of disposal, to prove that Contractor has legally disposed such materials. Submit four (4) copies of each manifest.

6.35. Non-Regulated Materials

A. Non-regulated materials are any substance that is not required by any federal, state, or local regulations to have special management, storage, disposal or handling practices.

B. Non-regulated materials may be disposed at state-permitted, non-hazardous waste landfills.

C. For non-regulated material to be reused, or disposed on site or at a site other than a state-permitted landfill, the Contractor must obtain all required permits, agency approvals, property owner agreements, and pay all fees and taxes for all services and materials required in conjunction with the management, transportation, disposal and reuse of non-regulated materials.

6.35.01. Disposal at Other Than State-Permitted Landfills

A. The Contractor shall enter into an agreement with property owner, prior to disposal of materials, and submit a copy thereof to the Engineer, conveying a written consent from the property owner receiving the materials, providing:

1. A written authorization from property owner to accept materials at duly noting quantities, types of materials (soils, debris, etc.), and disposal property location address;

2 A written release from the property owner fully absolving the Santa Clara Valley Water District from any and all responsibility and legal liability towards any damage to life, and environment in connection with the disposal of the materials on the property.

B. The Contractor shall provide:

1. Copies of all applicable regulatory agency permits, approvals, licenses, and environmental clearances;

2. Site-specific health and ecological risk assessment and/or compliance with applicable regulatory agency regulations or guidelines, including but not limited to the Environmental Screening Levels per the latest guidelines from San Francisco Bay Regional Water Quality Control Board (SFBRWQCB);

3. Copies of documentation of communication made by Contractor with appropriate regulatory agencies on evaluation of regulatory requirements and regulatory agency approvals for disposal of materials;

4. Copies of laboratory testing reports for the materials to be disposed.

C. Within 15 days after disposal of materials at property location, the Contractor shall submit an acknowledgement, duly signed by property owner, certifying date of receipt of materials including quantity and types of materials (soils, debris, etc.) received, to prove that Contractor has disposed materials at the location designated in the agreement.

D. Waste Manifests: No later than 15 days after Contractor's request for final inspection, the Contractor must submit copies of all Non-Hazardous Waste Manifests signed by disposal facilities and certificates of disposal, to prove that Contractor has legally disposed such materials. Submit four (4) copies of each manifest.

6.36. Imported Earthfill Material

A. The Contractor shall not import earthfill material that is contaminated with regulated materials.

B. If imported earthfill materials are, or are found to be, contaminated by regulated materials, the Contractor shall immediately remove the contaminated material and dispose of it in accordance with all applicable laws, ordinances, and regulations; conduct necessary sampling and monitoring to verify that all contaminated material has been removed; and verify to the satisfaction of the Engineer and/or appropriate regulatory agencies that any surrounding areas, materials, soils, or waters have not been impacted by the contaminated materials. The subsequent disposal of the contaminated material shall be the responsibility of the Contractor. No compensation will be made to the Contractor by the District for removal, disposal, replacement, chemical analysis, or any other costs associated with the removal, disposal, and replacement of the contaminated material.

C. For each imported earthfill material to be used on the Project, the Contractor shall submit to the Engineer for review and acceptance, in accordance with Articles 9.02 and 19.01, an "Imported Materials Certification Form." Copies of the form are available from the Engineer. If the imported earthfill materials are to be obtained from more than one source, the Contractor shall submit a separate form for each source of earthfill material. This form shall be submitted for review and acceptance at least 30 days prior to the delivery of the earthfill material to the construction site.

D. The Engineer may obtain soil samples from the site and test them to monitor Contractor's compliance with these provisions.

6.37. Migratory Birds, Other Wildlife and Fish Species

A. The Contractor shall comply with all applicable federal and state laws, rules and regulations related to protection of migratory birds. The Contractor's attention is directed to the federal Migratory Bird Treaty Act (16 USC 703-712 50 CFR Part 21 and 50 CFR Part 10), and the California Department of Fish and Game Code Sections 2000, 3503, 3503.5, 3513, and 3800, that protect migratory birds, their nests, and their eggs from disturbance or destruction.

B. The Contractor shall ensure that birds are not allowed to nest in areas that may be impacted by the Project and shall not harm, or allow to be harmed, any migratory birds per provisions of all applicable statutes.

C. The contractor shall comply with all regulatory and permit requirements pertaining to other wildlife and fish species with the potential to occur within the project area.

6.38. Good Neighbor Requirements

A. The District is a public entity which takes seriously its responsibility to be a "Good Neighbor." Accordingly, the District seeks to perform its activities, including construction of its facilities, in a manner that takes into consideration the needs of the neighborhood, and is minimally disruptive.

B. The Contractor hereby acknowledges the critical importance of meeting the Contract requirements as set forth in these Specifications regarding the ~~"~~good neighbor requirements", which include, but not be limited to: public safety, working hours, noise pollution and vibration, air pollution, spillage and dust, traffic control, parking restrictions, and storm water pollution.

C. The Contractor agrees to adhere to the above ~~"~~good neighbor requirements" which relate to the lessening of the impact which the work being performed under this Contract, might otherwise have upon the surrounding neighbors. The Contractor acknowledges that its responsibility to observe the restrictions of this Contract relating to the above requirements is significant, critical, and a material provision of this Contract. Therefore any breach of any applicable provision related to these requirements constitutes a material breach of this Contract which shall give rise to the right on the part of the District to immediately terminate this Contract, without any further showing of cause.

D. No decision, action or inaction on the part of the District with respect to one such violation may be deemed to be a waiver of any remedy available to the District in the event of any other violation of the provisions of this Contract, including the right to terminate this Contract at any time and at any stage of the work should a material breach occur.

SECTION 7. PROSECUTION AND PROGRESS OF WORK

7.01. Assignment

A. The performance of the Contract may not be assigned except upon the written consent of the Board of Directors. Consent will not be given to any proposed assignment which would relieve the original Contractor or surety of their responsibilities under the Contract.

B. The Contractor may assign moneys due, or to become due under the Contract, and such assignment will be recognized by the District, if given proper notice thereof, to the extent permitted by law, but any assignment of moneys shall be subject to all proper setoffs in favor of the District and to all deductions provided for in the Contract and particularly all money withheld, whether assigned or not, shall be subject to being used by the District for the completion of the work in the event that the Contractor should be in default therein.

7.02. Notice to Begin Work

A. The Notice to Begin Work will be issued by the Designated Engineer within 10 days after receipt of the signed Agreement, and approval by District of the Contract Bonds and insurance documents. Reference is made to Article 4.04.

7.03. Commencement of Work

A. The Contractor shall not begin work until receipt from the District of the Notice to Begin Work, and shall, upon receiving Notice, begin work within the time specified in the notice. The time specified in said Notice will allow a period of at least 10 days after the date of said Notice for commencement of work. After receipt of said Notice, the Contractor shall diligently prosecute the Work to completion. The Contractor shall provide, at least 24 hours in advance, written notice to the Engineer of the Contractor's intention to start Work and specify the date on which the Contractor intends to start.

7.04. Work Progress Schedule

A. If required by the Special Provisions, the bidder to whom the Contract is awarded shall, prior to execution of the Contract, submit a practicable work schedule to the Engineer, showing the order and dates within which the Contractor proposes to carry out the work.

B. If required by the Engineer, the Contractor shall submit supplementary work progress schedules to indicate approximately the percentage of work scheduled for completion at any time.

C. The progress schedule and supplementary progress schedules submitted shall be consistent, in all respects, with the time requirements of the Contract.

7.05. Temporary Suspension of Work

A. By written order to the Contractor, the Engineer may suspend the work wholly or in part for an indefinite period, or for such period as the Engineer may deem necessary, for any of the following reasons:

1. Weather conditions or other conditions which are unfavorable for the proper prosecution of the work;

2. Failure of the Contractor to carry out orders given or to perform any provisions of the Contract; or

3. The convenience and benefit of the District.

B. Such suspension shall be effective upon receipt by the Contractor of the written order suspending the work and shall be terminated upon receipt by the Contractor of the written order terminating the suspension.

C. If, under authority of (A) or (C) above, the Engineer orders a suspension of all or a portion of the work which is the current controlling operation, it will be cause for a time extension if it affects the controlling item of work.

7.06. Liquidated Damages

A. In case all the work called for under the Contract in all parts and requirements is not finished or completed within the number of days as set forth in the Special Provisions, it is agreed that damage will be sustained by the District, and that it is and will be impracticable and extremely difficult to ascertain and determine the actual damage which the District will sustain in the event of and by reason of such delay; and it is, therefore, agreed that the Contractor will pay to the District the sum set forth in the Special Provisions per day for each and every day's delay in finishing the work in excess of the number of days prescribed; and the Contractor agrees to pay said liquidated damages herein provided for, and further agrees that the District may deduct the amount thereof from any moneys due, or that may become due, to the Contractor under the Contract.

7.07. Termination of Control

A. Failure to supply an adequate working force or material of proper quality, or in any other respect to prosecute the work with the diligence and force specified by the Contract, is grounds for termination of the Contractor's control over the work and for taking over the work by the District.

7.08. Termination of Contract

A. The District may terminate the Contract at any time upon a determination that the same is in the best interests of the District. Upon such termination, the rights, duties, and obligations of the parties shall be as stated in Section 8-1.11 of the

State Specifications, wherein the words ―Director" and ―Engineer" shall mean the Engineer, and the words ―State" and ―Department" shall mean District.

7.09. Contractor's Cost Data

A. The District or any of its duly authorized representatives shall, until the expiration of 4 years after filing the Notice of Completion and Acceptance under this Contract or any subcontract under it, have access to and the right to examine any of the Contractor's or subcontractor's payrolls, records of personnel, invoices of materials, records of plant and equipment costs, and any and all other directly pertinent books, documents, papers, and records of such Contractor or subcontractors, involving transactions related to said Contract or subcontracts. In the event State or Federal funds are involved in the financing of the project, the State or Federal Government shall have the same rights of inspection as the District.

7.10. Coordination With Utilities

A. In general, the location of existing utility facilities as shown on the Drawings is approximate. This information has been obtained from utility maps furnished by the various agencies involved, and the District does not guarantee either the correctness of locations or the extent of such locations.

B. Service laterals, such as house sanitary, water, electrical, gas, cable TV, storm or telephone cables, or appurtenances, may not all be shown on the Drawings. Section 4215 of the California Government Code does not require public agencies to indicate the presence of service laterals or appurtenances whenever the presence of such utilities can be inferred from the presence of other visible facilities, such as buildings, meter boxes, or junction boxes, on or adjacent to the construction site. No changes in the Contract price or Contract time will be made due to the presence of unidentified or incorrectly located service laterals or appurtenances. It shall be the responsibility of the Contractor to ascertain the exact location of the utility facilities.

C. Unless otherwise indicated on the Drawings or specified in the Specifications, the Contractor shall maintain in service all utilities including house services, power, lighting, and telephone conduits, and any other surface or subsurface structure or facility of any nature that may be affected by the work; provided, however, that the Contractor, for convenience, may arrange with the owner to temporarily disconnect house service lines or other facilities along the line of the work. The cost of disconnecting and restoring such utilities shall be borne by the Contractor.

D. In the event that a main or trunk line utility facility is encountered which interferes with the work and is neither shown on the Drawings nor specified in the Specifications, the Contractor shall immediately notify the District in writing. The District will either have the appropriate utility company or public agency relocate the facility, or the District will direct the Contractor to relocate the facility in accordance with Article 5.03, Change in Work.

E. In the event that a main or trunk line utility facility is encountered which interferes with the work and which the Contractor believes is not shown on the Drawings or indicated in the Specifications with reasonable accuracy, the Contractor shall immediately notify the District in writing. Reasonable accuracy is defined as being within the tolerances noted on the Drawings. If the Engineer determines that the main or trunk line utility facility was shown on the Drawings or indicated in the Specifications with reasonable accuracy, the Contractor shall be solely responsible for relocation or removal, and no additional time will be granted nor will additional compensation be made for any additional work required. If the Engineer determines that the main or trunk line utility facility was not shown on the Drawings or indicated in the Specifications with reasonable accuracy, the District will either have the appropriate utility company or public agency relocate the facility, or the District will direct the Contractor to relocate the facility in accordance with Article 5.03, Change in Work.

F. When a delay in the completion of the project is caused by the failure of the District or the owner of a utility facility to provide for removal or relocation of existing main or trunk line utility facilities which are not shown on the Drawings or indicated in the Specifications, or which are not shown on the Drawings or indicated in the Specifications with reasonable accuracy, the Contract time will be extended in accordance with Article 5.05, Change of Contract Time.

SECTION 8. MEASUREMENT AND PAYMENT

8.01. Measurement of Quantities

A. All work except work based on time and materials will be paid for at a contract price per unit of measurement and will be measured by the Engineer in accordance with the United States Standard Measures. Unless otherwise specifically provided, the Engineer will compute quantities by a method which, in the Engineer's opinion, is best suited to obtain an accurate determination. The weights of metalwork, pipe, and other metal parts to be paid for on the basis of weight, will be determined by the Engineer. The District will not provide scales for weighing material. The Engineer will determine the weight of each part or item in the most practicable manner and will use for that purpose manufacturer's weights, or in their absence, catalog weights or estimated weights, in that order; provided, that weights of nonmetallic coatings will be excluded.

8.02. Deductions From Payments

A. The District may, at its option and at any time, retain out of any amounts due the Contractor, sums sufficient to cover claims, filed pursuant to Section 3179 et seq. of the Civil Code.

8.03. Progress Payment

A. On the 25th of each month, the Contractor will prepare and submit to the District an estimate in writing of the total amount of work done; an estimate of the acceptable materials furnished and delivered by the Contractor to the jobsite and not used up to the date of such estimate, and the value thereof. Small/Micro Business Enterprise (SBE) Utilization Report, if required, must be submitted with the payment request. The Contractor must also submit the certified weekly payroll(s) for the pay estimate period in accordance with Article 6.04.C. Each progress pay request is to include payment for work completed up to and including the 25th of the month. Acceptable materials shall be those materials which will become a part of the finished construction work. The basis for partial payments of lump sum or other unit Contract items will be determined by agreement between the Engineer and the Contractor.

B. Payment requests shall be submitted on an approved Contractor Monthly Progress Pay Estimate Summary sheet. The pay request submitted by the Contractor shall contain a source document which provides back-up information on how the estimate was prepared. A source document is defined as the basic document used to record or calculate quantities. The source document must contain the appropriate Contract Bid Item, the location of the installation, the necessary measurement and/or calculations, and the name of the person preparing the document. Before any partial payment or the final payment is made, the Contractor shall submit satisfactory evidence that the Contractor is not delinquent in payments to employees or creditors (for example, subcontractors, suppliers, etc.) for labor and materials incorporated into the work. Request for payment of work performed on extra work shall be accompanied by the Daily

Extra Work Report Form FC204w. The form shall be signed by both the District inspector and the Contractor's representative.

C. Upon receipt of a payment request, the District shall review the payment request for the purpose of determining that the payment request is a proper payment request. Any payment request determined not to be a proper payment request suitable for payment shall be returned to the Contractor no later than seven days, after receipt. A payment request returned pursuant to this paragraph shall be accompanied by a letter citing the reasons why the payment request is not proper. The following are examples of an improper payment request:

1. The item of work requested to be paid was not performed.

2. The work being requested to be paid has already been paid in previous Progress Pay Estimates.

3. The work performed and requested to be paid was not done in accordance with the contract (non-compliance).

4. The quality of the finished product is unacceptable.

5. The source documentation is inaccurate.

6. The Daily Extra Work Reports (for extra work) are not properly filled out.

7. Failure to submit SBE Utilization Report, if required.

D. If the District fails to make any progress payment within 30 days after receipt of an undisputed and properly submitted payment request from the Contractor, the District shall pay interest to the Contractor equivalent to the legal rate set forth in subdivision (a) of Section 685.010 of the Code of Civil Procedure.

E. The number of days available to the District to make a payment without incurring interest pursuant to this section shall be reduced by the number of days by which the District exceeds the seven-day return requirement set forth in paragraph A.

1. The District shall retain 10 percent of such estimated value of work done and 10 percent of the value of the materials so estimated to have been furnished and delivered and unused as aforesaid, and shall pay to the Contractor, while carrying on the work, the balance not retained as aforesaid, after deducting therefrom all previous payments and all sums to be kept or retained under the provisions of the Contract. However, at any time after 50 percent of the work has been completed, the contractor may request in writing that progress payments be made in full and no further retainage withheld. If the District finds that satisfactory progress has been made, the District may make any remaining progress payments in full for actual work completed, or may withhold any amount up to 10 percent thereof, as the District may find appropriate, based on the Contractor's progress. No such estimate or payment shall be required to

be made when, in the judgment of the Engineer, the work is not proceeding in accordance with the provisions of the Contract, or when, in the Engineer's judgment, the total value of the work done since the last estimate amounts to less than $1,000. No such estimate or payment shall be considered to be an acceptance of any defective work or improper materials. All progress estimates and payments shall be subject to correction in the final estimate.

2. At the request of the Contractor, the District will permit the substitution of securities or certificates of deposit equivalent to the amount of any monies withheld by the District as above provided. The deposit shall, in that event, be with the District, or with a state or federal chartered bank in California as the escrow agent.

3. Alternatively, on written request of the Contractor, the District will make payments of the retention as it is earned directly to the escrow agent.

F. The Contractor shall bear the expense of the District and the escrow agent in connection with the escrow deposit made.

G. Securities or certificates of deposit to be placed in escrow shall be subject to approval of the District and, unless otherwise permitted by the escrow agreement, shall be of a value of at least equivalent to the amounts of retention to be paid to the Contractor pursuant to this Section.

H. When the District makes payment of retentions directly to the escrow agent, the Contractor may direct, subject to approval of the District, the investment of the payments into securities.

I. The Contractor shall enter into an escrow agreement satisfactory to the District, which agreement shall be substantially similar to that specified in Section 22300 of the Public Contract Code.

J. The Contractor shall obtain the written consent of the surety to such agreement.

8.04. Final Payment

A. As soon as practicable after completion of the work, the Engineer will prepare in writing and furnish to the Contractor the final estimate of the quantities of work done and all payments due under the Contract, which estimate will show deductions for prior payments and any other amounts to be retained under Article 8.02. The amount determined due, less the amount retained, will be paid. This retained amount will not be due or payable until 35 days after the completion of the work and the filing of Notice of Completion and Acceptance in the manner provided by law, and until after the Contractor has furnished the District a release of all claims by the Contractor against the District arising by virtue of this Contract, except such claims in definite amounts as the Contractor may specifically exempt from the operation of the release and the furnishing of any guaranty required by Article 3.11.

8.05. Scope of Payment

A. Payment for all items of work at the unit or lump sum price shall be considered as full compensation for furnishing all labor, materials, tools, equipment, and incidentals necessary to complete the item of work, and no additional allowance will be made therefor. Payment for items of work which are called for in the Specifications or shown on the Drawings but which are not separately identified in the Proposal form shall be compensated as part of the bid price of one or more of the items which are listed, and no additional allowance will be made therefor.

8.06. Acceptance of Final Payment Constitutes Release

A. Acceptance by the Contractor of final payment constitutes and shall be a release by the Contractor of all claims against the District, except disputed contract claims in stated amounts specifically excepted in writing.

8.07. Small/Micro Business Enterprise Utilization Reporting Requirement

A. The Contractor must submit the properly completed SBE Utilization Report with the request for progress payment and request for final payment. All payment requests must include the Report, if required, to be considered a ~~"~~properly submitted payment request."

SECTION 9. CONTROL OF WORK

9.01. Authority of Engineer

A. The Engineer shall decide all questions which may arise as to the quality or acceptability of materials furnished and work performed and rate of progress of the work, all questions which may arise as to the interpretation of the Drawings and Specifications, and all questions as to the acceptable fulfillment of the Contract on the part of the Contractor. The Engineer's decision shall be final. The Engineer shall have authority to enforce and make effective such decisions and orders which the Contractor fails to carry out promptly.

9.02. Submittals to be Furnished by the Contractor

A. The Drawings listed in the Specifications shall be supplemented by the Contractor with such submittals as may be required for the prosecution of the work and approval of equipment. Submittals may include shop detail drawings, fabrication drawings, falsework and formwork drawings, pipe layouts, and similar classes of drawings, calculations, specifications, product data, samples, manuals, spare parts, photographs, survey data, schedules, or similar items required to be submitted to the Engineer by the Contract Documents. These submittals shall be favorably reviewed by the Engineer before any work involving these submittals is performed. No change shall be made by the Contractor to any submittal after it has been favorably reviewed by the Engineer. Submittals shall contain all required detailed information at a reasonable scale with enough views to clearly show the work to be done or the item to be furnished, and shall be properly checked.

B. It is expressly understood, however, that Engineer's review of the Contractor's submittals shall not relieve the Contractor of any responsibility for accuracy of dimensions and details, or for mutual agreement of dimensions and details. The Contractor shall be solely responsible for agreement and conformity of submittals with the Contract Drawings and Specifications.

C. The sequence of submission of submittals shall be such that all information is available to the Engineer for review of each submittal as it is received. Five copies of each submittal shall be submitted. For submittals that require Engineer's review, one copy will be returned to the Contractor marked "No Exceptions," "Make Corrections as Noted," "Revise and Resubmit," or "Rejected" within 20 days after receipt. The Contractor shall make any necessary corrections and revisions to returned submittals and shall resubmit the submittals within 20 days after receipt. For items that are required to be submitted to the Engineer but which do not require review, one copy will be returned to the Contractor marked "In Receipt Of." The Contractor is responsible for furnishing submittals in sufficient time for approval action, including resubmittal, without delaying construction.

D. If a returned submittal is required to be resubmitted more than once due to Contractor's failure to comply with submittal requirements, the Contractor may be charged all costs associated with re-review of the submittal. The charges may

be deducted from progress payment due or become due to the Contractor and shall be based on actual review hours recorded by the Engineer. The hourly rate of the Engineer, and/or Engineer's consultant, shall be the actual wages times a multiplier specified in the Special Provisions.

9.02.01. Submittal Requirements

A. All submittals shall be clearly identified by reference to the Project name, specification section, article, paragraph, drawing number or detail as applicable. Submittals shall be well-organized, and shall be clear and legible and of sufficient size for clear presentation of data. Data submitted shall describe the materials, equipment, or other items to be furnished and, where applicable, the system in sufficient detail to indicate full compliance with the requirements of these Contract Documents.

B. All submittals shall be in the English language and customary American units (feet, inches, pounds, degrees Fahrenheit, etc.) Metric units may be provided in addition to customary American units.

C. All submittals and supporting data, catalogs, schedules, etc., shall be submitted as the instruments of the Contractor, who shall be responsible for their accuracy, completeness, coordination and conformance with the Contract Documents. These submittals may be prepared by the Contractor, subcontractors, or suppliers, but the Contractor shall review and ascertain that submittals meet all of the requirements of the Contract Documents, while conforming to structural, space and access conditions at the point of installation prior to submission to the Engineer. Designation of work ~~by~~ others," if shown in submittals, shall mean that the work will be the responsibility of the Contractor rather than the subcontractor of supplier who prepared these submittals. The Contractor shall ensure that there is no conflict with other submittals. The Contractor shall ensure coordination of submittals among the related crafts and subcontractors.

D. If the submittals show any deviations from the Contract requirements, the Contractor shall include with the submittal a separate written description of such deviations and the reasons therefor. The Engineer will respond in writing within 10 days indicating the time necessary to evaluate the deviations. If any deviations from the Contract requirements are not clearly noted and prominently identified on the submittal, the review of the submittal shall not constitute acceptance of such deviations.

E. The Contractor shall check all submittals before submitting them to the Engineer and shall certify on each transmittal letter and on each submittal that the submittal has been checked, is in compliance with the Contract Documents except as specifically noted, and that each deviation from the Contract Documents is specifically noted.

F. Submittals shall include:

1. A separate transmittal form shall be used for each specific item, class of material, equipment, and items specified in separate, discrete Specification Sections or Articles, for which a submittal is required. Submittal documents common to more than one piece of equipment shall be identified with all the appropriate equipment numbers. Submittals for various items shall be made with a single form when the items taken together constitute a manufacturer's package or are so functionally related that expediency indicates checking or review of the group or package as a whole. The Specification Section or Article to which the submittal is related shall be indicated on the transmittal form.

2. A sequential number, in chronological order, shall be assigned for each submittal and shall be noted on the transmittal form. Submittal numbers shall have the following format: ~~X~~XX.Y"; where ~~X~~XX" is the sequential number (001 to 999) assigned by the Contractor, ~~Y~~" is the resubmittal number (1 to 9). For each item submitted, the Contractor shall include the applicable Article number on the submittal and on the transmittal form.

3. A separate written description of deviations from the Contract Documents, if any.

4. The date of submission and the dates of any previous submissions.

5. District's Name, the Project title and number.

6. Contractor identification.

7. The names of (as applicable):

   a. Subcontractor
   b. Supplier
   c. Manufacturer

8. Identification of the product, with the Specification Section or Article number, page and paragraph(s).

9. Field dimensions, clearly identified as such.

10. Relation to adjacent or critical features of the work or materials.

11. Applicable standards, such as ASTM.

12. Identification of revisions on resubmittals.

G. All resubmittals shall be accompanied by a memorandum or letter from the Contractor that responds to each written review comment provided by the Engineer in the previous submittal. Each response shall describe the corrective action taken or reason for Contractor's actions.

9.02.02. Submittal Review Procedures

A. Review of submittals has as its primary objective the completion of the work in full conformance with the Contract Documents, unmarred by field corrections, and within the construction time provided. In addition to this primary objective, submittal review as a secondary objective will assist the Contractor in its procurement of equipment that will meet all requirements of the Contract Documents, will fit the structures detailed on the Drawings, will be completed with respect to piping, electrical, and control connections, will have the proper functional characteristics, and will become an integral part of a complete operating facility.

B. The review of shop drawings, product data, and samples will be for general conformance with the design concept and Contract Documents. They shall not be construed:

1. as permitting any deviation from or non-compliance with the Contract requirements;

2. as relieving the Contractor of responsibility for any errors, including details, dimensions, and materials;

3. as approving departures from details furnished by the Engineer, except as otherwise provided herein.

C. The Contractor remains responsible for details and accuracy, for coordinating the work with all other associated work and trades, for selecting fabrication processes, for techniques of assembly, and for performing work in a safe manner.

D. If the Contractor submits an incomplete submittal, the submittal will be considered ~~"~~Rejected" and will be returned to the Contractor without review except that the Engineer may, at Engineer's sole discretion, elect to provide a list of, or mark the submittal indicating some or all of the areas that are incomplete. A complete submittal shall contain sufficient data to demonstrate that the items comply with the Contract Documents; shall meet the minimum requirements for submissions cited in the technical specifications; and shall include any necessary revisions required for equipment other than first named manufacturer. The Engineer's determination whether a submittal is complete shall be final.

E. After review by the Engineer of each of the Contractor's submissions, the material will be returned to the Contractor with actions defined as follows.

1. NO EXCEPTIONS NOTED

The favorable review of submittal is subject to its compatibility with future submissions and additional partial submissions for portions of the work not covered in this submission. It does not constitute approval or deletion

of specified or required items not shown in the partial submission. The Contractor may proceed with the work shown in the submittal.

2. MAKE CORRECTIONS AS NOTED

   Same as 1, except that minor corrections as noted shall be made by the Contractor. Contractor may proceed with the work providing corrections have been made. Resubmission is not required.

3. REVISE AND RESUBMIT

   Rejected because of major inconsistencies or errors which shall be resolved or corrected by the Contractor prior to subsequent resubmission. The Contractor may not proceed with the work shown in the submittal.

4. REJECTED

   Submitted material does not conform to Drawings and Specifications in major respect., i.e.: wrong size, model, capacity, or material. The Contractor may not proceed with the work shown in the submittal.

5. IN RECEIPT OF

   The submittal does not require review by the Engineer.

F. Resubmittals will be processed in the same manner as first submittals. On resubmittals the Contractor shall direct specific attention, in writing on the letter of transmittal and on resubmitted shop drawings by use of revision triangles or other similar methods, to revisions from previous submissions. Any such revisions which are not clearly identified shall be made at the risk of the Contractor and if any such revisions are installed, all portions thereof that do not fully conform to the Contract Documents shall be corrected by the Contractor at its expense as required by the Engineer.

G. The favorable review of submittals (returned ―No Exceptions Noted” or ―Make Corrections as Noted”) shall be obtained from the Engineer prior to the fabrication, delivery, and construction of items requiring submittals.

H. The favorable review of all submittals (returned ―No Exceptions Noted” or ―Make Corrections as Noted”) shall apply in general design only and shall in no way relieve the Contractor for responsibility for errors or omissions contained therein. Favorable review shall not relieve the Contractor of its obligation to meet safety requirements and all other requirements of laws, nor constitute a change order authorization. Favorable review will not constitute acceptance by the District of any responsibility for the accuracy, coordination, and completeness of the submittals or the items of equipment represented on the submittals.

9.03. Drawings and Data to be Furnished by the District

A. The District may issue supplemental Drawings for the construction work under the Contract. These Drawings will show additional details as required for construction purposes. Installation instructions for District-furnished materials will be furnished if required.

9.04. Superintendence

A. The Contractor shall designate, in writing before starting work, an authorized representative who shall have complete authority to represent and act for the Contractor. Said authorized representative of the Contractor shall normally be present at the site of the work at all times while work is actually in progress on the Contract. During any period when work is suspended, arrangements acceptable to the Engineer shall be made for any emergency work which may be required.

B. Whenever the Contractor or an authorized representative is not present on any part of the work where it may be desired to give direction, orders will be given by the Engineer, which shall be received and obeyed by the superintendent who may have charge of the particular work in reference to which the orders are given. Any order given by the Engineer, not otherwise required by the Specifications to be in writing, will, on request of the Contractor, be given or confirmed by the Engineer in writing.

C. The Contractor shall designate, in writing, the names and telephone numbers of at least three representatives who could be contacted at any time in the event that an emergency occurs.

9.05. Character of Workers

A. Any subcontractor, or person employed by the Contractor or subcontractor, who fails or refuses to carry out the directions of the Engineer, or appears to the Engineer to be incompetent or to act in a disorderly or improper manner, shall be removed from the work immediately on the written request of the Engineer, and such person shall not again be employed on the work.

9.06. Layout of Work and Surveys

A. The Engineer will establish lines and grades required for proper execution of the work. The Contractor shall, without additional cost to the District, give such assistance and provide such drill holes, forms, ladders, spikes, nails, and lights as may be required by the Engineer in layout of work and surveys. The Contractor shall adjust construction operations at such points and for such reasonable time as may be necessary to assist in the layout of work and surveys.

B. The District will provide only the minimum of survey crew services essential to orderly performance of the work, and District survey crews will not be available at all times for the work under these Specifications.

C. When the Contractor requires stakes or marks, the Engineer shall be notified of such requirements a reasonable length of time in advance of starting operations that require such stakes or marks. In no event shall a notice of less than 5 working days be considered a reasonable length of time.

D. Where construction operations require removal of the District's stakes or other survey marks, the Contractor shall reference such points in an approved manner. Survey stakes or marks established by the District shall be preserved by the Contractor until their removal is authorized, and in case of their unauthorized destruction or removal by the Contractor's forces, they will be replaced at the Contractor's expense. Any cost to the District of replacing survey stakes or marks will be deducted from payments due the Contractor. Such cost will include a reasonable charge for use of District supplies, labor and equipment, plus overhead.

9.07. Inspection

A. The Engineer shall at all times have access to the work during its construction, and shall be furnished with every reasonable facility for ascertaining that the materials and the quality of performance are in accordance with the requirements and intentions of the Drawings and Specifications. All work done and all materials furnished shall be subject to the Engineer's inspection and approval.

B. The day-to-day inspection performed by the various inspectors employed by the District shall not constitute approval or ratification of work improperly done by the Contractor. The Engineer is the only person authorized to recommend acceptance or rejection of work and materials.

C. The presence or absence of an inspector during performance of the work shall not relieve the Contractor of any obligation to fulfill the Contract. It shall be the duty of the Contractor to see that all provisions are complied with in detail, irrespective of the inspection given the work during its progress by the Engineer or representatives of the Engineer. Any plan or method suggested to the Contractor by the Engineer or an inspector, but not specified or required, if adopted or followed in whole or in part, shall be used at the risk and responsibility of the Contractor; and the District and the Engineer will assume no responsibility therefor.

D. Should it be considered necessary or advisable by the District at any time before acceptance of the entire work to make an examination of work already completed by removing or tearing out same, the Contractor shall, on request, promptly furnish all necessary facilities, labor, and material. If such work is found to be defective or nonconforming in any material respect, due to the fault of the Contractor or subcontractors, the Contractor shall defray all the expenses of such examination and of satisfactory reconstruction. If, however, such work is found to meet the requirements of the Contract, an equitable adjustment shall be made in the Contract price to compensate the Contractor for the additional services involved in such examination and reconstruction and, if completion of the work

has been delayed thereby, the Contractor shall, in addition, be granted a suitable extension of time.

E. Projects financed in whole or part with federal or state funds shall be subject to inspection at all times by the federal or state agency involved.

F. No portion of any work, installed materials, products, or equipment, shall be covered or concealed in any manner without first being inspected by the Engineer. Whenever the Contractor is ready to backfill, bury, cast-in-concrete, hide, or otherwise cover any work under this Contract, the Contractor shall notify the Engineer not less than one Work Day in advance to request inspection before beginning any such work of covering. Failure of the Contractor to notify the Engineer at least one Work Day in advance of any such inspections shall be reasonable cause for the Engineer to order a sufficient delay in the Contractor's schedule to allow time for such inspection. If any work, materials, products, or equipment is covered prior to inspection or the express approval of the Engineer, that work, materials, products, or equipment shall be uncovered at no additional cost to the District. All associated costs, including its impact on other portions of the work, shall be borne by the Contractor.

G. The Contractor shall not conceal any part of the work until record drawing information has been taken and recorded by the Contractor.

H. The Engineer, at District's cost, may attend scheduled off-site plants for inspection of equipment, materials, or software to be incorporated into the work. Should such inspection attended by Engineer be delayed, the Contractor shall reimburse the District for the actual salary costs of Engineer times the overhead rate specified in the Special Provisions and the actual cost of other direct costs incurred due to the inspection delay.

I. The Contractor shall accommodate inspection at the place of origin of materials, product, and equipment if specified or requested by the Engineer.

J. The Contractor shall provide safe passage and access for inspection of the work in any area. Off-site storage areas and warehouse facilities are also subject to inspection if payment for any equipment or materials stored at these locations is claimed for progress payment.

9.08. Defective and Unauthorized Works

A. All work which has been rejected shall be remedied or removed and replaced by the Contractor in an acceptable manner at no additional cost to the District.

B. Payment will not be made for any work done beyond the lines and grades shown on the Drawings or established by the Engineer, or any extra work done without written authority, and such work will be considered as unauthorized. Work so done may be ordered remedied, removed, or replaced.

C. If the Contractor should fail to comply promptly with any order of the Engineer made under the provisions of this Article, the Engineer may cause rejected or unauthorized work to be remedied, removed, or replaced, and the costs thereof to be deducted from any moneys due or to become due the Contractor.

9.09. Construction Equipment and Plant

A. The Contractor shall provide and use construction equipment and plant capable of producing the quality and quantity of work required. Construction equipment shall be identified by readily visible numbers. If ordered, Contractor shall remove unsatisfactory construction equipment and discontinue the operation of unsatisfactory plants.

9.10. Final Inspection and Acceptance of Work

A. When the work authorized by the Contract has been completed, the Engineer will make the final inspection. If the Engineer determines that the work has been completed, in accordance with the Contract, the Engineer will recommend that the work be accepted. The Contractor will be relieved of the responsibility imposed by Article 6.15 on the date of acceptance.

9.11. Use Prior to Acceptance

A. The District may take possession of, and use, all or part of the project prior to acceptance.

SECTION 10. CONTROL OF MATERIALS AND INSTALLED EQUIPMENT

10.01. Furnishing and Quality of Materials and Equipment

A. Contractor shall furnish materials and equipment as specified.

B. Only materials and equipment conforming to the requirements of the Contract shall be incorporated in the project. Except as otherwise specified or approved, materials and equipment shall be new and unused.

10.02. Source of Materials and Equipment

A. The Contractor shall furnish a list of sources of materials and equipment to the Engineer on a District form in sufficient time to permit proper inspection and testing of materials and equipment in advance of their use. Inspection and tests will be made and reports rendered, but it is understood that such inspections and tests shall not be considered as a guarantee of acceptance of any material or equipment which may be delivered later for incorporation in the work. No equipment or materials which, after approval, have in any way become unfit for use, shall be used in the work.

B. At the option of the Engineer, the source of supply of each of the materials shall be approved before the delivery is started. All materials proposed for use may be inspected or tested at any time during their preparation and use. After trial, if it is found that sources of supply which appeared satisfactory do not furnish a uniform product, or if the product from any source proves unacceptable at any time, the Contractor shall furnish approved material from other sources.

10.03. Product Data and Samples

A. The Contractor shall submit five copies of approval data for materials and equipment proposed for installation. Approval data shall consist of complete material and equipment lists accompanied by catalog data sheets, cuts, performance curves, diagrams, or similar descriptive material. Material and equipment lists shall give, in each case, the name of the manufacturer, trade name, catalog reference, size, finish, and all other pertinent data. It is intended that approval data should not include such materials as small pipe and small pipe fittings, conduit and conduit fittings, or tubing. The Contractor shall furnish operation and maintenance manuals or instructions if required by the Special Provisions.

B. The Contractor shall furnish without charge such samples as may be required.

10.04. Storage of Materials and Equipment

A. Materials and equipment shall be so stored as to ensure the preservation of their quality and fitness for the work. They shall be placed under cover when necessary and shall be stored in a manner that will facilitate prompt inspection.

10.05. Defective Materials

A. All materials not conforming to the requirements of the Contract shall be considered as defective and all such materials shall be rejected, whether in place or not. They shall be removed immediately from the site of the work, unless otherwise permitted by the Engineer. No rejected material, the defects of which have been subsequently corrected, shall be used unless approval in writing has been given by the Engineer. If the Contractor should fail to comply promptly with any order of the Engineer made under the provisions of this Article, the Engineer may cause defective materials to be removed and replaced, and the costs thereof to be deducted from moneys due, or to become due, the Contractor.

10.06. Equal, Sole or Single Source, and Substitution

A. Specified Item: Material, equipment, product, thing, or service referenced in the Contract Documents that has been identified by specific brand, manufacturer, catalog number, or trade name.

B. Equal Items: Items, as referenced in these Contract Documents are those, which, to the Engineer's knowledge, meet the requirements of the Contract Documents and are considered equal to the specified items.

C. Substitutions: Substitutions are considered changes to the Contract.

D. Sole source/ single source: If the material or equipment specification lists only one manufacturer, catalog number, or trade name, and is followed by the designation ~~no~~ equal," ~~no~~ others acceptable," ~~no~~ alternatives allowed," ~~no~~ other manufacturers accepted," and similar language, then the material or equipment is designated to be a sole source item based on one or more of the reasons stated in the Public Contract Code 3400 (b). No substitution of sole-source items will be allowed.

E. Whenever an item has been designated in the Contract Documents as described in paragraph A, such designations shall be deemed to be used for the purpose of facilitating the description of the Specified Item and shall be deemed to be followed by the words ~~or~~ equal," whether explicitly stated or not. Unless specifically noted to the contrary (see Paragraph D above), if only one manufacturer, catalog number, or trade name is listed, it is the only product known to the District that meets the requirements of the Contract Documents, but this does not preclude the provision of materials or equipment which are equal to the specified item.

F. Submission of items which are proposed as equal to the Specified Items will be evaluated in accordance with the following provisions:

1. The Contractor shall submit to the Engineer in accordance with Public Contract Code section 3400, after contract award, no later than 35 days after the date of Notice to Begin Work, proposal for replacement of a Specified Item with an Equal Item. At the sole discretion of the Engineer,

District may give written consent to the submission of the proposed Equal Item after the expiration of the thirty-five (35) day time limit.

2. Burden of proof as to the submitted items being equal to the Specified Items is the responsibility of the Contractor.

3. The Contractor shall submit sufficient data, drawings, samples, literature, calculations, and all other information requested by District to demonstrate to the Engineer that the proposed items are equal to the Specified Items.

4. Failure of the Contractor to submit the proposed Equal Item for review in the manner and time described above shall be sufficient cause for rejection by the Engineer of the proposed Equal Item.

5. The Engineer's evaluation of the submitted items proposed as being equal to the Specified Items is based on, but not limited to, the following:

   a. performance;

   b. functionality, efficiency;

   c. durability;

   d. life cycle costs;

   e. ease and economy of maintenance and operation;

   f. construction and physical characteristics as compared to the specified items, or as delineated in the Contract Documents;

   g. dimensional compatibility with the materials it combined to produce a unified design system;

   h. compatibility with products in use;

   i. all aspects of finished appearance including form, texture and color, that may affect other design elements;

   j. impacts to Project design, construction schedule, or construction sequencing.

6. The Engineer will be the sole judge in this matter. In the event the Engineer rejects the proposed items, the Contractor shall submit the Specified Items.

G. Submission of items which are proposed as substitutions of the Specified Items shall be subject to the following provisions:

1. Except for the 35-day time limit specified in F.1, all provisions and evaluation criteria under Paragraph F above shall apply to the proposed substitutions.

2. Unless a written consent is provided by the Engineer, no submission of proposed substitutions will be accepted nor considered by the Engineer prior to contract award.

3. Other additional provisions and/or criteria as deemed necessary by the Engineer.

4. Substitution(s) of Specified Item(s) proposed by the Contractor may require modifications in the Project design, Project schedule, and/or construction sequencing. The Contractor shall identify all necessary project modifications required for the substitution(s). Necessary project modifications may include, but not be limited to, electrical, instrumentation, structural, mechanical, architectural, testing, engineering costs, and other related modifications.

5. The Contractor is responsible for all costs associated with the substitution(s), including submittal reviews and any project redesigns and modifications. Contractor refusal to accept any of these costs shall be just cause for disapproval of the substitution(s).

6. District will review and respond in writing to the Contractor's proposed substitution within twenty-one (21) days after receipt of all information District requires to make a final determination.

7. If the proposed items are accepted, 50 percent of all savings shall be credited to the District.

10.07. Testing Materials

A. Unless otherwise specified in the Special Provisions or Technical Provisions or called for on the Drawings, the work shall be tested by the District or its authorized representative in order to determine compliance with the Drawings and the Specifications.

B. Whenever a reference is made to a specification or test designation, whether of the American Society of Testing Materials, the American Water Works Association, or any other authority, and the number accompanying the specification or test method representing the year of its acceptance or adoption is omitted, the reference shall mean the specification of test method in effect on the date of the Notice to Bidders.

C. Whenever said specification or test designation provides for test reports (such as certified mill test reports) from the manufacturer, copies of such reports, identified as to the lot of material, shall be furnished to the Engineer. The manufacturer's

test reports shall supplement the inspection, sampling, and testing provisions, and shall not constitute a waiver of the District's right to inspect.

10.08. Plant Inspection

A. Materials and equipment which become a part of the completed work will be subject to inspection at the place of production or manufacture, at the shipping point, or at the site of the work. Materials and equipment requiring inspection at the place of production or manufacture will be designated by the Engineer. Where plant inspection is so designated, the Engineer shall be given 14 days' advance notice of the start of manufacture or production. The Contractor's purchase orders for materials and equipment, for which plant inspection has been designated by the Engineer, shall bear a suitable notation advising suppliers and subcontractors of inspection requirements.

B. The Engineer or an authorized representative shall have free entry at all times to such parts of the plant as concerns the manufacture or production of materials and equipment for the District. Adequate facilities shall be furnished free of charge to make the necessary inspection.

C. The District assumes no obligation to inspect materials or equipment at the place of manufacture or production, or at the shipping point.

10.09. District-Furnished Materials

A. Materials furnished by the District will be available at locations designated in the Special Provisions. They shall be loaded, unloaded, and hauled to the site of the work by the Contractor at the Contractor's expense. The Contractor shall be held responsible for all materials furnished, and shall pay all demurrage and storage charges.

SPECIAL PROVISIONS

Page left intentionally blank

SPECIAL PROVISIONS
SECTION 11. WORK AND SCHEDULE OF WORK

11.01. Summary of Work

A. The work to be completed under this Contract shall consist of furnishing all tools, equipment, materials, supplies, and manufactured articles and furnishing all labor, transportation and services, including fuel, power, water, and essential communications, and performing all work, or other operations required to construct the Lower Silver Creek - Reaches 4, 5 and 6A Flood Control and Creek Restoration Project (LSC Reaches 4, 5 & 6A), all within the City of San Jose and as illustrated on the Plans and detailed in these Specifications. The work includes, but is not limited to the following:

1. Compliance with NPDES General Permit, including SWPPP preparation, installation of BMP's
2. Clearing and grubbing within the project limits, including the removal of trees, vegetation, sack concrete, and other miscellaneous items
3. Channel excavation and embankment, including construction of 1.5:1 slopes, and removal and replacement of unsuitable material, in order to increase the channel capacity
4. Construction and surfacing of a maintenance road along one side of the existing Lower Silver Creek within the project limits
5. Street reconstruction where the channel crosses under public streets at five (5) locations: Jackson Ave.; Capitol Expwy.; Story Rd.; Murtha Dr.; and Moss Point Dr.
6. Construction of PCC access ramps from the streets onto the maintenance road
7. Construction of RCP and CMP storm drains and appurtenances, ranging in size from 15" to 54", including a 24" elliptical RCP
8. Modification of storm drain outfalls
9. Replacement and relocation of VCP, DIP and PVC sanitary sewer main, including two (2) sanitary sewer siphons, one being a bore and jack installation
10. Traffic control
11. Chain link and wood privacy fencing and chain link gates
12. Cast-in-place reinforced concrete box culvert (five (5) total) at Jackson Ave.
13. Addition of one Pre-cast reinforced concrete box culvert at Capitol Expwy.
14. Addition of one Pre-cast reinforced concrete box culvert at Story Rd.
15. Replacement of the Lyndale Pedestrian Bridge
16. Drilled pier flood and retaining walls
17. Cantilever retaining walls at access ramps
18. Soldier pile retaining walls

19. U-channel near Jackson Ave.
20. Channel lining at North Babb Creek
21. Channel lining at South Babb Creek
22. ¼ Ton rock lining in certain locations of the Lower Silver Creek Channel
23. Concrete lining in certain locations of the Lower Silver Creek Channel
24. Grouted rock lining in certain locations of the Lower Silver Creek Channel
25. 1.5:1 slope toe protection construct from ¼ ton rock
26. Revegetation planting
27. Landscaping planting
28. Landscaping irrigation system
29. Landscape maintenance which includes the maintenance during the landscape installation and the maintenance during a three-year establishment period following the landscape installation
30. Other miscellaneous construction work and items necessary to satisfactorily complete the work.

11.02. Drawings

A. The list of drawing sheets accompanying these Specifications is included in Appendix F and made a part thereof.

11.03. Site Maintenance and Cleanup

A. During construction, the Contractor shall keep the work site, areas adjacent to the work site, and access roads in an orderly condition, free and clear from debris and discarded materials. Care shall be taken to prevent spillage when hauling is done. Any spillage or debris resulting from Contractor's operation shall be immediately removed by the Contractor. The Contractor shall not sweep, grade, or flush surplus materials, rubbish, debris, or dust into storm drains or stream channels.

B. Upon completion of work, the Contractor shall remove from the work site and areas adjacent to the work site, all construction materials, debris, unused materials, concrete forms, and other materials used during the construction belonging to the Contractor. All access roads and maintenance roads shall be graded, removing wheel tracks and smoothing up such roads. See Article 21.06, "Final Cleaning" of these Specifications.

11.04. Time Allowance for Completion of Work

A. The following paragraph replaces the second paragraph of Article 4.01 "Award of Contract" in these Specifications:

The Contract, if awarded, will be to a responsible bidder, submitting the lowest responsive bid. The award, if made, will be within 60 days after the opening of the proposals. If the lowest responsible bidder refuses or fails to execute the Contract, the award may be made to the second lowest responsible bidder. The award, if made, will be within 90 days after the opening of the proposals. If the second lowest responsible bidder refuses or fails to execute the Contract, the award may be made to the third lowest responsible bidder. The award, if made, will be within 120 days after the opening of the proposals. The periods of time specified above within which the award of Contract may be made shall be subject to extension for such further period as may be agreed upon in writing between the District and the bidder concerned.

B. The First Chargeable Day of the Contract will be defined in the Notice to Begin Work issued by the District. The time limit for the completion of work is measured from the First Chargeable Day of the Contract, and is as follows:

- ***Base Work*** *(Interstate 680 to N. Babb Creek):*
  - 1158 total calendar days to the completion of the Base Work installation.
  - 2254 total calendar days to the end of the 1096 day Base Work maintenance period.
- ***Bid Additive 1*** *[BA1] (North Babb Creek up to, but not including Story Road):*
  - 1159 total calendar days to the completion of the BA1 installation.
  - 2255 total calendar days to the end of the 1096 day BA1 maintenance period.
- ***Bid Additive 2*** *[BA2] (Story Road to Murtha Drive Centerline):*
  - 1523 total calendar days to the completion of the BA2 installation.
  - 2619 total calendar days to the end of the 1096 day BA2 maintenance period.
- ***Bid Additive 3*** *[BA3] (Murtha Drive Centerline to Moss Point Centerline):*
  - 1524 total calendar days to the completion of the BA3 installation.
  - 2620 total calendar days to the end of the 1096 day BA3 maintenance period.

C. See Article 17.03, “Hours of Work” of these Specifications.

D. The District is not required to accept an earlier (advanced) schedule, i.e., one that shows early completion date(s) but within the Contract time as specified in these Specifications. Time(s) for completion of work shall adhere to the Contract

time(s) specified in these Specifications unless earlier time(s) of completion are requested by Contractor and agreed to by the District. Any such agreement shall be formalized by a change order in accordance with Article 5.05, "Change of Contract Time" of these Specifications.

MILESTONE COMPLETION:

A. Work shall include the following milestones:

1. ***Base Work*** *(Interstate 680 to N. Babb Creek)* – Base Work Milestone Items are:

Milestone 1: Penrod Place work, including sanitary sewer relocation and PVC storm drain structure construction, complete including all roadway restoration, striping and other related work, complete by May 1, 2011.

Milestone 2: Phase 1 Jackson Avenue work completed including Phase 1 traffic control totally removed and either Phase 2 traffic control installed or original condition restored, complete by November 1, 2011.

Milestone 3: U-Channel between Interstate 680 and Jackson Avenue work complete by November 1, 2011.

Milestone 4: Phase 2 Jackson Avenue work completed by November 1, 2012 with Phase 2 traffic control remaining until either March 1, 2013 or the start of Phase 3 Jackson Avenue work, whichever is later.

Milestone 5: Capitol Expressway work (all phases) complete, including removal of the Phase 4 traffic control and installation of permanent traffic markings & signs by November 1, 2012.

Milestone 6: Complete all other work within the Base Work area, except for Jackson Avenue Phase 3 & Phase 4 work complete by November 30, 2012.

Milestone 7: Phase 3 Jackson Avenue work completed including Phase 3 traffic control totally removed and installation of permanent traffic markings & signs, by November 1, 2013.

Milestone 8: Phase 4 Jackson Avenue work within the traveled way complete by December 1, 2013.

2. ***Bid Additive 1*** *(North Babb Creek up to, but not including Story Road)* – Bid Additive 1 Milestone Items are:

   Milestone 1 Bid Additive 1: All Special Structures and work within the new channel (property line-to-property line) complete by December 2, 2013.

3. ***Bid Additive 2*** *(Story Road to Murtha Drive Centerline)* – Bid Additive 2 Milestone Items are:

   Milestone 1 Bid Additive 2: All Special Structures, work within the new channel, and Story Road items of work within the traveled way complete by December 1, 2014.

4. ***Bid Additive 3*** *(Murtha Drive Centerline to Moss Point Centerline)* – Bid Additive 3 Milestone Items are:

   Milestone 1 Bid Additive 3: All Special Structures and work within the new channel complete by December 2, 2014.

C. The First Chargeable Day of the Contract will be defined in the Notice to Begin Work issued by the District.

D. See General Provisions Article 7.06, "Liquidated Damages" and Special Provisions Article 11.07, "Liquidated Damages" of these Specifications for liquidated damage assessments.

11.05. Excusable Inclement Weather Delays

A. The Contractor shall base the Construction Schedule upon the inclusion of the following number of calendar days per year of excusable inclement weather.

Month	**Excusable Inclement Weather Days**
January	18
February	16
March	10
April	4
May	3
June	0
July	0
August	0
September	0
October	4
November	9
December	11

B. Contractor's attention is directed to Article 5.05.02, "Extension of Time for Delay Due to Excusable Inclement Weather" of these Specifications.

11.06. Schedule of Work

A. Except as provided for in these Specifications, the Contractor shall be responsible for scheduling the sequence of its work. Once work has begun, it shall proceed in a manner in accordance with the accepted schedule.

11.06.01. Preliminary Schedule of Work

A. Within 10 days of the first chargeable day of the Contract as specified in the Notice to Begin Work, the Contractor shall submit to the Engineer a Preliminary Schedule of Work. This schedule shall be a graphic bar diagram showing the planned contract work operations during the first 45 days of the Contract. See Article 11.07, "Liquidated Damages" of these Specifications.

11.06.02. Detailed Schedule of Work

A. Within 30 days of the first chargeable day of the Contract as specified in the Notice to Begin Work, the Contractor shall submit a Detailed Schedule of Work. The submittal shall be in hard copy and electronic format.

B. CPM Schedule

1. The Detailed Schedule of Work shall be a Critical Path Method (CPM) schedule which represents the planned order of significant activities to complete the work within the time allowed under this Contract. The CPM schedule shall be presented in sufficient detail such that sequence and interdependence of activities of the Project can be identified.

2. The schedule shall account for onsite and offsite activities such as, but not limited to:

- Construction and other executable tasks;
- Testing, training and start-up activities;
- Design, procurement, fabrication, inspection and delivery of materials and long lead time equipment;
- Submission, review, resubmittal and approval of contract submittals;
- Reviews by regulatory agencies and other third parties of the work, including acquisitions of necessary permits;

- Construction and sequencing constraints as specified in these Specifications;
- District managed activities such as District furnished equipment which can affect project schedule;
- Removal or relocation of interfering utilities by third parties;

3. No work within the existing creek channel (top-of-existing bank to top-of-existing bank) may be scheduled for the calendar year of 2010.

4. The Contractor must schedule all activities such that the following are performed on or before the date shown in each calendar year of the construction or within the time limit given. The following must be reflected in the schedule:

   a. Any grading within the new creek channel (property line-to-property line) shall be completed on or before September 24 of each year.

   b. All work requiring water diversion or dewatering within the creek channel must be completed each season including removal of all equipment from the creek channel on or before October 12 of each year.

   c. The Contractor shall provide a written report, indicating status and expected date of completion of specific winterization activities (including but not limited to hydroseeding, dewatering, and mobilization) to the Engineer no later than September 15 of each year.

   d. All winterization of graded/disturbed areas within the project limits must be complete and in-place on or before October 9 of each year.

   e. The Lyndale Pedestrian Bridge shall not be closed to public use for longer than 120 calendar days.

   Liquidated damages for failure to perform the above items prior to or on the dates shown shall be assessed in accordance with General Provisions Article 7.06 “Liquidated Damages and Special Provisions Article 11.07 “Liquidated Damages” of these Specifications.

5. The schedule shall be a fully legible, calendar time scaled, network diagram in the form of Activities on the Arrow Diagram Method (ADM) or Precedence Diagram Method (PDM). Activities for each designated portion of the work shall be identified by separate sub-networks

interconnected with the basic network diagrams. The network diagram shall show task relationship lines and be drawn for the early start of all activities.

6. The activities shall describe, in detail what is to be accomplished and where, the number of working days allocated for the activity, and identify the resources to be used. A legend and code may be used to show that an activity is to be performed in whole or part by a subcontractor.

7. The following information shall be furnished as a minimum for each activity:

   a. Preceding and succeeding activities
   b. Activity description
   c. Estimated duration of activity
   d. Earliest start date (by calendar date)
   e. Earliest finish date (by calendar date)
   f. Actual finish date(by calendar date)
   g. Slack or float
   h. Percentage of activity completed
   i. Activity constraints
   j. Dollar value of each activity if cost loaded schedule is required

8. Activities making up the critical path for the entire Contract and the critical path for each specific designated portion of the work shall be identified. The network diagram shall be organized to indicate a continuous flow of progress of activities from left to right.

9. Except for concrete curing, submittal review, equipment fabrication and deliveries, activities shall be no longer than 20 working days. Activities longer than 20 working days shall be subdivided into sub-elements of work.

10. Along with the network diagram, the Contractor shall submit a tabular listing of the schedule.

11. When required in accordance with Article 20.02,“Progress Payments and Schedule of Values” of these Specifications, the Schedule of Work shall be fully construction cost loaded. Work activities other than third party activities and District managed activities shall be cost loaded. The task breakdown of the Schedule of Work shall coincide with the Schedule of Values.

12. The Engineer’s favorable review and acceptance of the schedule shall not relieve the Contractor for errors and omissions in tasks, durations, or logic.

C. Progress Schedule (Adjustment to Schedule, Schedule Updates and Recovery Schedule)

1. If the Contractor desires to make a change to the CPM schedule after commencing construction, a revised CPM schedule shall be submitted to the Engineer at least 15 days prior to any such change in the project work.

2. The Contractor shall submit a schedule update to the Engineer before the fifth day of each month. The schedule update shall incorporate all current information, including progress, approved adjustments of time duration, and proposed changes in sequence or logic. The updated schedule shall state the percentage of work completed as of the last date of the previous month. The Contractor shall also submit a narrative report which shall include a description of problem areas, current and anticipated delaying factors and their impact, and explanation of corrective actions taken or proposed. Progress status shall be evaluated on the basis of float on the critical path at the time of updating, with negative float indicating the Project is behind schedule and positive float indicating status ahead of schedule. Reference is made to Article 11.07, “Liquidated Damages” of these Specifications for Liquidated Damages for failure to update the CPM schedule.

3. At any time that construction progress lags behind the original or current CPM schedule by either 20 working days or by five percent of the remaining time to complete the Contract, whichever is less, the Contractor shall prepare and submit a recovery schedule to the Engineer. This recovery schedule shall demonstrate how construction will be expedited and executed to achieve the contractual completion dates.

D. Time Impact Analysis

1. If the Contractor foresees that an ordered change or District delay will impact a controlling item of work or work progress, a written request for adjustment of time and supporting data shall be submitted to the Engineer promptly in accordance with Section 5.05.01, “General”. The supporting data shall include a schedule analysis and updated CPM schedule substantiating the Contractor’s request.

2. The CPM schedule shall document all ordered changes or District delays as separate activities or groups of activities. These activities shall be entered into the relevant part of the approved schedule at the time the ordered change or District delay occurred. In case of a deductive change reducing the quantity of work, the estimated duration for these activities shall be adjusted to reflect the reduction.

3. The Contractor shall submit a written report describing the ordered change or District delay; status of construction at the time of the occurrence; activities affected by the occurrence; and the impact of the event time computation on all affected activities.

4. Only changes or delays that affect or create controlling items of work as defined by the schedule will result in time adjustments. The Engineer will determine if a request for time extension is warranted.

5. Total float or slack is defined as the amount of time between the early start date and the late start date, or the early finish date and the late finish date of any activity in the schedule. Total float or slack is not time for the exclusive use or benefit of either the District or the Contractor. It is a resource available to the Project.

11.06.03. Payment

A. Full compensation for all labor, materials, tools, equipment and incidentals, and for doing all work in complying with this Article, including updating and submitting project schedules and associated reports shall be considered as included in various Contract items of work and no additional compensation will be provided.

B. Liquidated Damages for failure to submit schedules and schedule updates within the time specified shall be assessed in accordance with General Provisions Article 7.06 “Liquidated Damages” and Special Provisions Article 11.07, “Liquidated Damages” of these Specifications.

11.07. Liquidated Damages

A. Liquidated damage amounts shall be as follows:

1. $600.00 per day for failure to complete all work of Base Work Milestone 1 on or before the date required.

2. $1,000.00 per day for failure to complete all work of Base Work Milestone 2 on or before the date required.

3. $1,000.00 per day for failure to complete all work of Base Work Milestone 3 on or before the date required.

4. $1,000.00 per day for failure to complete all work of Base Work Milestone 4 on or before the date required.

5. $1,000.00 per day for failure to complete all work of Base Work Milestone 5 on or before the date required.

6. $1,000.00 per day for failure to complete all work of Base Work Milestone 6 on or before the date required.

7. $1,000.00 per day for failure to complete all work of Base Work Milestone 7 on or before the date required.

8. $1,000.00 per day for failure to complete all work of Base Work Milestone 8 on or before the date required.

9. $1,000.00 per day for failure to complete all work of Bid Additive 1 Milestone 1 on or before the date required.

10. $1,000.00 per day for failure to complete all work of Bid Additive 2 Milestone 1 on or before the date required.

11. $1,000.00 per day for failure to complete all work of Bid Additive 3 Milestone 1 on or before the date required.

12. $700.00 per day, per each item, per occurrence, for failure to perform the items listed in Article 11.06.02. "Detailed Work Schedule" Item B.4. on or before the date shown in each calendar year of the construction or for exceeding the time limit given.

13. $500.00 per day, per each item, per occurrence, for failure to submit the Preliminary Schedule of Work, Detailed Schedule of Work, Schedule Updates, and Master Submittal List within the limits allowed.

B. Contractor's attention is directed to Article 13.10.07, "Liquidated Damages", of these Specifications regarding Liquidated Damage assessments for failure to submit O&M documents.

C. Liquidated damages shall be assessed separately and independently. Imposition of liquidated damages shall not preclude the District from taking other action as deemed appropriate to ensure performance of the Contract, and shall not relieve the Contractor of responsibility to comply with these Specifications.

11.08. Submittals and Withholding of Partial Payment

A. The Engineer retains the right to withhold partial payments in accordance with Article 8.03, "Progress Payment" of these Specifications until the Contractor has submitted the Preliminary Schedule of Work, Detailed Schedule of Work, Schedule Updates and any other schedules and submittals as required by these Specifications.

11.09. Fines

A. The Contractor shall bear the cost of any penalties, fines, clean-up costs, or damages imposed on the District by the State or other regulatory agencies for violations caused by actions, or lack of action, of the Contractor. The District may deduct the amount thereof from any monies due, or that may become due, to the Contractor under this Contract.

11.10. Payment

A. Unless otherwise noted, full compensation for furnishing all labor, materials, tools, equipment and incidentals, and for doing all work in complying with all requirements under Section 11, “Work and Schedule of Work” shall be considered incidental and included in the prices bid for various items of work and no additional payment will be made therefore.

SECTION 12. GENERAL REQUIREMENTS

12.01. Abbreviations and Acronyms

AASHTO	American Association of State and Highway and Transportation Officials
AAMA	Architectural Aluminum Manufacturers Association
ACI	American Concrete Institute
ADC	Air Diffusion Council
AISC	American Institute of Steel Construction
AISI	American Iron and Steel Institute
AMCA	Air Moving and Conditioning Association
ANSI	American National Standard Institute (formerly United States of America Standards Institute)
APA	American Plywood Association
API	American Petroleum Institute
ASCE	American Society of Civil Engineers
ASHRAE	American Society of Heating, Refrigerating and Air Conditioning Construction Managers
ASME	American Society of Mechanical Engineers
ASTM	American Society of Testing and Materials
AWPA	American Wood-Preservers Association
AWS	American Welding Society
AWWA	American Water Works Association
AI	Asphalt Institute
AIA	American Public Works Association
ASA	American Standards Association
CAGI	Compressed Air and Gas Institute CAL/OSHA State of California Department of Industrial Relations, Division of Industrial Safety
CBM	Certified Ballast Manufacturers
CBR	California Bearing Ratio
CDFG	California Department of Fish and Game
CI	Chlorine Institute
CISPI	Cast Iron Soil Pipe Institute
CMAA	Crane Manufacturers Association of America
CPM	Critical Path Method
CPSC	Consumer Products Safety Commission
CRA	California Redwood Association
CRSI	Concrete Reinforcing Steel Institute
DFPA	Douglas Fir Plywood Association
EIA	Electronic Industries Association
EPA	U.S. Environmental Protection Agency
ETL	Electronic Testing Laboratory
FM	Factory Mutual Insurance Company
FS	Federal Specifications
HI	Hydraulic Institute
IAPMO	International Association of Plumbing and Mechanical Officials
ICBO	International Conference of Building Officials

IEEE	Institute of Electrical and Electronic Engineers
IES	Illuminating Engineering Society
IPCE	International Power Cable Engineers Association
ISA	Instrument Society of America
NAAMM	National Association of Architectural Metal Manufacturers
NBS	National Bureau of Standards
NEC	National Electric Code
NEMA	National Electrical Manufacturers Association
NFPA	National Fire Protection Association
NSF	National Sanitation Foundation
NWMA	National Woodwork Manufacturers Association
OSHA	Occupational Safety and Health Act
PCMAC	Prestressed Concrete Manufacturers Association of California
RWQCB	Regional Water Quality Control Board
SAE	Society of Automotive Engineers
SMACNA	Sheet Metal and Air Conditioning Contractors National Association
SSPC	Structural Steel Painting council TCA Tile Council of America
SWPPP	Storm Water Pollution Control Prevention Plan
UBC	Uniform Building Code
UPC	Uniform Plumbing Code
UL	Underwriters laboratories
WCLIB	West Coast Lumber Inspection Bureau
WIC	Woodwork Institute of California

Technical Abbreviations

AB	Aggregate Base
A/B	As Built
AR	Air Relief
ASSY	Assembly
B & S	Bell and Spigot
B/SW	Back of Sidewalk
BC	Beginning of Curve
BM	Bench Mark
BO	Blow-Off
BFV	Butterfly Valve
CL	Centerline
CO	Clean Out
K	Copper
CB	Catch Basin
CIOD	Cast Iron Outside Diameter
CIP	Cast Iron Pipe
CIPP	Cast In Place Pipe
CMP	Corrugated Metal Pipe
CP	Concrete Pipe
CTB	Cement Treated Base
DCVA	Double Check Valve Assembly

DI	Ductile Iron
DIP	Ductile Iron Pipe
DIA	Diameter
DWG	Drawing
E	Electric
EC	End of Curve
ELEV	Elevation
ELL	Elbow
ENGR	Engineer
ETS	Electrolysis Test Station
EP	Edge of Pavement
EST	Estimate
FC	Face of Curb
FE	Female End
FH	Fire Hydrant
FBE	Flanged Both Ends
FL	Flow Line
FLG	Flange
FOE	Flanged One End
FPQ	Final Pay Quantity
G	Gas
GALV	Galvanized
GV	Gate Valve
HE	Hub End
ID	Inside Diameter
INV	Invert
IP	Iron Pipe
JP	Joint Pole
LEB	Large End Bell
MA	Male End
MCP	Monolithic Concrete Pipe
MH	Manhole
MON	Monument
ME	Milled Each End
MIN	Minimum
MBA	Minimum Bearing Area
MOA	Milled Over All
MJ	Mechanical Joint
MOE	Milled One End
MT	Male Thread
NIC	Not in Contract
NTS	Not To Scale
OC	On Center
OD	Outside Diameter
PE	Polyethylene
PI	Point of Intersection
PL	Property Line

POE	Plain One End
PP	Power Pole
PRV	Pressure Reducing Valve
PSI	Pounds per Square inch
PVC	Polyvinyl Chloride
R	Radius
RI	Rodding Inlet
RET	Return
RD	Road
RCB	Reinforced Concrete Box (culvert)
RCP	Reinforced Concrete Pipe
RR	Rubber Ring
RT	Ring-Tite
SS	Sanitary Sewer
SCM	Steel Pipe, Cement Lined, Asphalt Mastic Coated
SD	Storm Drain
SEB	Small End Bell
SHT	Sheet
STA	Station
SQ	Square
SCC	Steel Cylinder Concrete Pipe
STD	Standard
STL	Steel
SW	Solvent Weld
S/W	Sidewalk
T	Telephone
TBE	Threaded Both Ends
TBM	Temporary Bench Mark
TBO	Temporary Blow-Off
TC	Top Curb or Tangent to Curve
TJ	Tyton Joint
TOE	Threaded One End
TSMM	Temporary Survey Monitoring Monument
TYP	Typical
VCP	Vitrified Clay Pipe
W	Water
WM	Water Meter
W/	With
W/O	Without

12.02. Definition of Key Terms

A. **Milestone:** A specific portion of the work identified in the Contract as a Milestone. It is the stage in the progress of the work when the work is complete in accordance with the Contract so that the District may elect to occupy or utilize the work for its intended use prior to Acceptance.

B. **Milestone Completion:** The date determined by the District when the work of a Milestone is complete. Milestone Completion does not constitute acceptance but does establish the completion date of the Milestone for the purpose of assessment of Liquidated Damages, if any, associated with the Milestone.

C. **Operational:** To be considered operational, a facility or facility component must be functional in all manners intended for its use, at its rated capacity and through its entire operation range. For a new facility to be considered operational, it must be installed and tested.

D. **Project:** The erection, construction, alteration, repair, or improvement to be accomplished under the Contract; or, the entire public improvements proposed by the District to be constructed in whole or in part pursuant to the requirements of the Contract, including any phasing or milestone requirements.

E. **Project Completion:** Project Completion is the stage at which the work of the entire Project is complete per the Contract documents, and the Engineer has performed the final inspection and issued a Project Completion letter. See Article 21.01, “Project Completion and Acceptance” of these Specifications.

F. **Work:** Everything required to complete the Project; or, that which is constructed or done pursuant to the requirements of the Contract to accomplish the Project including but not limited to providing labor, materials, equipment, and information documentation.

12.03. Site Investigation

Contractor acknowledges that he has visited the site of the work, has fully informed himself as to existing conditions and limitations prior to the presentation of his bid, and agrees that there will be no increase in the contract price or time for any additional work done or material or equipment furnished, the need for which would have been disclosed by a reasonable inspection**.**

12.04. District-Furnished Reports

12.04.01. Geotechnical Reports

A. A geotechnical investigation consisting of soil borings and test pits was carried out for the District. The results of the soil samples and laboratory test analyses are provided in the report entitled:”Geotechnical Investigation Report, Lower

Silver Creek Reaches 4-6A" by Parikh Consultants, Inc. dated May 2010" (Parikh May 2010 Report).

B. A copy of this geotechnical report is available for review at the District office, 5750 Almaden Expressway, San Jose, California. The Contractor may, with an advance notice of three working days, purchase a copy of the Parikh May 2010 Report from Parikh Consultants, Inc. Purchase price to be determined. See Article 3.02, "Examination of Drawings, Specifications, and Site of Work" of these Specifications.

C. The Contractor shall be aware that the geotechnical report indicated the presence of water at various locations along the project alignment. At locations shown on the plans, piezometer wells were installed to monitor the depth to groundwater. This information is available for review at the District office.

12.04.02. Environmental Report

A. The District has prepared documents regarding environmental impact of the LSC Reaches 4-6A which include discussions of the impacts. These documents are:

1. Santa Clara Valley Water District. Fourth Addendum to the Initial Study/Negative Declaration for the Lower Silver Creek Watershed Project, Reaches 4, 5, and 6, May 2010, which is an addendum to the 1983 EIR and the 1998 Initial Study and Negative Declaration.

B. The above documents are available for review at the District Office, 5750 Almaden Expressway, San Jose, California 95118. The Contractor is advised that these documents are for Contractor's information only.

12.04.03. Hazardous Materials Investigation Report

A. A Hazardous Materials Investigation consisting of soil borings and sample analysis was carried out for the District. The results of the soil samples and laboratory test analyses are provided for information only in the report prepared by Geocon Consultants, Inc., entitled "Limited Site Investigation Report, Lower Silver Creek Reaches 4, 5, and 6A" and dated May 2010. Contractor's attention is directed to Table 3 "Summary of Metals Results – Sediment and Soil" for various levels of metals and other constituents found in the soil. Any required soil testing to satisfy disposal site requirements shall be the responsibility of the Contractor, and included in other items of work requiring the testing and no additional payment will be made therefore.

B. The report entitled, "Update Phase I Environmental Site Assessment 13785 Story Road, 2885 Murtha Drive, and 1307 Farringdon Drive San Jose, Santa Clara County, California," by Geocon Consultants, Inc., and dated May 2010 was prepared as an updated to the report entitled "Environmental Site Assessment (ESA) Report, SCVWD Contract No. A2327T, Lower Silver Creek Coyote Creek Confluence to

Aborn Road, San Jose, California", prepared by D&M Consulting Engineers, Inc., dated September 8, 2000. The update report provides current information regarding the potential for existing hazardous material/waste impacts at the portions of the parcels in San Jose, California adjacent to the Lower Silver Creek Reach 4-6A project.

C. A copy of these reports are available for review at the District office, 5750 Almaden Expressway, San Jose, California. If desired, prospective bidders can schedule an appointment to review this Report by calling (408) 265-2607 ext. 3088. See Article 3.02, "Examination of Drawings, Specifications, and Site of Work" of these Specifications.

The Contractors attention is directed to Article 3.02, "Examination of Drawings, Specifications, and Site of Work", and Article 18.05, "Regulated Material Management" of these Specifications.

12.04.04. Archeological Findings Report

Not Used.

12.04.05. As-Built Drawings

The following are the drawings known to exist:

A. AT&T – Jackson Avenue VRAD Cabinet As-Built Drawings, November 2009

B. San Jose Water Company – Story Road Water Main Installation As-Built Drawings, March 2008

C. Jackson Ave

1. 89-6357-36, Jackson-San Antonio Supplement, 1989 (As-Built)
2. PP-620, Jackson Ave Storm Sewer, 1959 (As-Built)
3. PP-905, Box Culvert Silver Creek & Jackson Avenue, 1961
4. TR-2138, Tract No. 2138 Berns Manor Unit No. 1, 1958 (As-Built)
5. TR-2201, Tract No. 2201 Storybook Farms Unit No. 1, 1958 (As-Built)
6. TS-597, Jackson Ave & Route 680 N/B Off-Ramp, 1988

D. Penrod Place SS Siphon

1. TR-2203, Tract No. 2203 Storybrook Farms Unit No. 3, 1959 (As-Built)
2. TR-2205, Tract No. 2205 Storybrook Farms Unit No. 5, 1959(As-Built)
3. TR-6308, Tract No. 6308 Portion of Albers Ranch, 1978 (As-Built)

E. Capitol Expressway

1. IM-1673, Capitol Avenue between Highwood Drive and Story Road, 1955 (As-Built)

2. IM-2514, Capitol Expressway from 0.1 Mile South of Story Road to State Route 680, 1970 (As-Built)
3. PP-966, Box Culvert on Silver Creek at Capitol Avenue, 1961
4. TR-1268, Tract No. 1268 Sunnyside Acres, 1954
5. TR-2204, Tract No. 2204 Storybrook Farms Unit No. 4, 1959 (As-Built)
6. TR-2205, Tract No. 2205 Storybrook Farms Unit No. 5, 1959 (As-Built)

F. Lyndale Avenue Foot Bridge
1. TR-6101, Tract No. 6101, 1978 (As-Built)

G. Story Road
1. 3-6485, Home Depot San Jose – McGinness Avenue & Story Road, 2008 (Record Drawing)
2. TR 1007, Tract No. 1007 Mayfair Heights Unit No. 2, 1952

H. Murtha Drive
1. TR-1794, Tract No. 1794 Foster Village, 1956

I. Moss Point Drive
1. GE-428, Culvert for Silver Creek at Moss Point Drive, 1972
2. TR-2825, Tract No. 2825 El Dorado Homes Unit No. 3, 1960 (As-Built)
3. TR-4728, Tract No. 4728 El Dorado Estates Unit No. 6, 1969 (As-Built)

This information is available for review at the District Office.

12.04.06. Utility Relocation Plans

The Utility Relocation Plans will be available for review at the District Office upon receipt of such plans by the District from the various utility providers.

12.05. Contractor's Engineering and Design

Not Used

12.05.01. Seismic Design Criteria

Per Building Codes

12.05.02. Wind Design Criteria

Per Building Codes

12.05.03. Hydraulic Design Criteria

Not Used

12.05.04. Truck Loading

A. All pre-cast products used shall be designed for H20-44 bridge loading.

12.06. Payment

A. Unless noted otherwise, full compensation for furnishing all labor, materials, tools, equipment and incidentals, and for doing all work involved in complying with all requirements under Section 12, “General Requirements” shall be considered incidental and included in the prices bid for the various items of work involved and no additional payment will be made therefore.

SECTION 13. SPECIAL REQUIREMENTS

13.01. Engineer

A. The Designated Engineer of the District shall be the District's representative who assumes all duties and responsibility and has all rights and authority as assigned in the Contract Documents in connection with completion of the work in accordance with the Contract Documents.

B. The Designated Engineer of the District is the Deputy Operating Officer of the *Watershed Capital Division*.

13.02. Project Signs

A. Contractor shall install and maintain five (5) District-furnished project identification signs at the locations shown on the Drawings and in accordance with the notes and details thereon and as specified in these Specifications. Pryor to installation of the signs, the Contractor shall confirm their exact location with the Engineer.

B. The signs shall be clearly visible to the public. All hardware, posts, and fasteners shall be furnished and installed by the Contractor.

C. The signs shall be picked up at the District Warehouse located at:

5905 Winfield Blvd.
San Jose, CA 95123
Phone (408) 265-2607

Arrangements to pick up the signs shall be made by contacting the District at least 2 working days in advance of the date when the signs are to be picked up.

D. The Contractor shall be responsible for the transportation of the signs to the jobsite and to ascertain all information, dimensions, connections, and appurtenances required to provide satisfactory installation of the signs.

E. Sign Installation:

1. Project signs furnished by the District will be approximately 4 feet wide and up to 8 feet high.

2. Sign support structure shall be two 4 by 4-inch (surfaced 4 sides) pressure treated wood post supports (grade No. 2 or better, straight, with no loose knots), one on each side of sign. Fasten posts to District-furnished signboard with 4-inch long minimum deck screws through post, 8 inches on-center. Top edges of each post shall have a ½-inch chamfer all around. Two-thirds of the height of each sign board shall be fitted into a nominal ¾-inch deep dado (verify in field) centered on each support post.

3. Mounting hardware shall be galvanized steel, concealed or recessed fasteners.

4. Posts shall be painted with exterior quality paint, white semi-gloss,

5. Finishes and paints shall be adequate to withstand continuous exterior weathering for 4 years without fading or damage to the appearance.

6. Install sign support posts plumb with a minimum of 3 feet of burial in 12-inch minimum diameter holes backfilled with concrete. Bottom of sign board shall be approximately 12 to 18-inches above grade as directed by Engineer. Slope the top of the concrete away from posts all around.

F. Pull boxes for project flyers shall be installed on project sign as directed by the Engineer. Pull box flyers will be maintained by the District.

G. The signs shall be installed prior to the start of construction and shall be maintained throughout the construction of the Project. Maintain signs and supports in a neat, clean condition; repair damages to structures, framings or signs until Project Completion. Remove or paint over graffiti and repair signs. Straighten signs whenever they are not plumb.

H. Upon completion and acceptance of the Project by the District, the Contractor shall remove the signs and framing and return them to the District warehouse at 5905 Winfield Blvd., San Jose, CA 95123. Arrangement to return the signs shall be made by contacting Winfield Warehouse at (408) 265-2607, extension 3800, at least 2 working days in advance of the date when the signs are to be returned. The Contractor shall restore the sign removal areas, backfill holes with soil and/or repair previous pavement saw cuts in kind, and clean the surrounding areas.

13.02.01. Payment

A. Full compensation for furnishing all labor, materials, tools, equipment and incidentals for doing all work involved in picking up and installing the District furnished signs, as shown on the Drawings, as specified in these Specifications, and as directed by the Engineer shall be included in the lump sum price bid for MOBILIZATION, Bid Item No. 2, and Bid Additive Item Nos. 58, 84, and 121 if/when included in the awarded project by the District, and no separate payment will be made therefore.

13.03. Office Facilities

13.03.01. Engineer's Office

A. The Contractor shall provide and maintain office facilities as described for the exclusive use of the Engineer and representatives of the Engineer. The location and condition of the office facilities shall be as approved by the Engineer. The

Contractor shall furnish weekly janitorial services in connection with said office for the duration of the work.

B. The office facilities and furniture shall be clean and in good condition, consistent with common professional offices and shall be approved by the Engineer.

C. The Contractor shall provide a phone answering system and a broadband internet service connection to a District-supplied computer for the exclusive use of the District's Engineer and authorized representatives.

1. Phone answering system:

   a. The phone answering system shall be a digital machine for outgoing messages, with day/time stamp, and shall be beeperless remote accessible. The phone answering system shall be a Phonematic Digital Answer No. 8800, Southwestern Bell No. FA1010 or equivalent.

   b. All calls pertaining to the job made from the telephone provided for the Engineer's use shall be at the Contractor's expense.

2. Broadband Internet Service:

   a. Broadband connection shall meet the definition by the U.S. Federal Commission as any connection to the internet with a speed of 10 MB or faster in at least one direction.

   b. The broadband connection shall consist of any of the following technologies:

      (1) Digital Subscriber Line (DSL), which uses copper telephone lines to carry voice traffic and high-speed data.

      (2) Cable modems, which tap into existing cable television company lines.

      (3) Wireless, which is typically made up of on-the-ground, antenna-to-antenna systems, commonly called "fix-wireless" systems.

      (4) Satellite, which is provided by direct broadcast satellite (DBS) companies such as DirecTV or Echo Star, as well as new companies focusing only on internet connections.

   c. The service connection shall include all necessary software and hardware, such as Ethernet cards and modems, which will be compatible with Microsoft Windows XP Professional operating system, and to connect with the District Server.

D. The office shall consist of one 12 foot wide by 60 foot long office trailer. This trailer shall be no older than 5 years old when installed at the site.

E. The office trailer shall be insulated and of weather-tight construction. The trailer shall be rigidly mounted and level. Stairs with a landing at floor level and guardrails shall be provided for two entrance doors at each trailer, each complete with deadbolt locksets. All locksets shall be keyed alike and 10 keys shall be provided. The door closest to the conference room shall be provided with a ramp with a slope of no greater than 1 foot rise to 12 feet run, landing, and conforming to the CBC and Americans With Disabilities Act (ADA) requirements for access. Ground surfaces within 20 feet of each trailer shall be either paved or covered with 6 inches of Class 2 aggregate base rock compacted to 90% relative compaction overlying high modulus woven soil separation geotextile. Surrounding surfaces shall be sloped to drain away from the trailer.

F. The office trailer shall have four offices plus unisex bathroom. There shall be at least one operable, screened window per office room. All windows shall be fitted with mini-blinds. Each trailer room shall be adequately lighted, heated, ventilated, and air conditioned. HVAC equipment shall be capable of maintaining a 70 degree F temperature within each trailer. At least 6 air changes per hour shall be provided in all rooms except the toilet room, which shall have 10 air changes per hour.

G. The Contractor shall provide electrical service to the office trailers, of sufficient capacity for all loads, including an adequate disconnect switch, and circuit breaker panel located in the inside of the trailer. At least one grounded 120 volt electrical receptacle shall be installed on the walls of each room with a maximum spacing between receptacles of 8 feet.

H. Provide fluorescent type lights inside suitable for office use. At least 70 foot-candles of initial uniform lighting at desk level shall be provided in all rooms except the toilet room, which may have 30 foot-candles. Provide a weatherproof outside light fixture near each entrance door.

I. The Contractor shall provide telephone service to locations within the temporary office as directed by the Engineer. A minimum of 8 separate phone lines shall be provided. Five new telephone handsets shall also be provided, all with speakerphone capabilities. One of these telephone handsets shall be suitable for use to allow a receptionist to connect to and transfer between at least 4 incoming telephone lines. Internet service provider accounts shall be provided for 4 separate computers.

J. The Contractor shall provide water connections, and a holding tank drain and waste system for the toilet room. The toilet room shall contain a flush-type water closet, a lavatory sink with hot and cold water, a mirror, an electric 5-gallon water heater, toilet and paper towel dispensers, coat hooks, shelf, and waste receptacle. The toilet room shall be ADA accessible. The Contractor shall maintain an adequate supply of toilet paper and paper towels during the duration

of the work. The Contractor shall pump the holding tank empty whenever it is 50 to 75 percent full during the work and keep it adequately charged with chemicals.

K. The Contractor shall clean the Engineer's office on a regular basis, at least weekly, for the duration of the work. Cleaning shall include emptying of waste receptacles, vacuuming and mopping floors, dusting, cleaning the toilet room, and washing windows. Cleaning shall be completed after 4 p.m. during weekdays. The Contractor shall also provide pest control as required during the work.

L. The following equipment and furnishings shall be provided and installed by the Contractor for the exclusive use of the Engineer throughout the duration of the work. These items shall be provided at the same time that the Engineer's office is provided. The Contractor shall be responsible for all maintenance, repair, and technical support required for the supplied equipment. The Contractor shall retain ownership of these equipment and furnishings after Final Completion.

1. Four steel desks; 60 by 30-inch; with a minimum of five side drawers and one center drawer; Hon model HON-32261-WK or equal. Provide desk wings suitable for desktop computer use.

2. Seven upholstered swivel desk chars with arm rests; Hon model HON-4002GG32W or equal.

3. Five five-drawer metal legal-sized filing cabinets with locks and keys.

4. One, approximately 4-ft by 8-ft conference table.

5. Four desk lamps; two-tube fluorescent; table mounted; adjustable arm for changing fixture location and angle.

6. One mobile print/clamp system rack; 12 clamp capacity; SAFCO SAF-5076 or equal; 12 each print clamps, 36-inches long, SAFCO SAF-5004-6 or equal.

7. Forty linear feet of wall mounted shelving; 12-inches deep; sized to hold continuous books without sagging; locations as directed by the Engineer.

8. Twelve identical padded metal folding chairs; KI model KRG--103--BE--0G3 or equal.

9. One work table; 29-inch desk height, 30 by 72-inch top; Bevis model BVS-FTE3072WA or equal.

10. Five waste receptacles, Rubbermaid model RUB--R2956-0 or equal.

11. Bottled drinking water "cooler" with hot and cold water, small refrigerator, microwave oven, coffee machine, and paper cup dispenser. Provide five

5-gallon water bottles and 400 paper cups each month for the duration of the work.

12. One garment rack with top storage shelf, umbrella holder, and space for a minimum of 6 clothes hangers. Vogel Peterson Model VOG-SGN-BK or equal.

13. Three dry erase presentation white boards, magnetic 48 by 72 inches, with wall mounting brackets, Quartet Model QRT--2547 or equal.

14. Two dry erase presentation white boards, magnetic 36 by 48 inches, with wall mounting brackets, Quartet Model QRT--2544 or equal.

15. Five metal bookcases, each with 3 adjustable shelves, commercial grade, nominal dimensions 34 inches wide by 12 inches deep by 47 inches high, Hon Model HON--S48ABC--K or equal.

16. Copy machine capable of the following:

    a. 20 pages per minute copy speed, minimum

    b. Up to 11” x 17” paper size capability

    c. Document feeder – minimum 25 sheet capacity

    d. Document scanning capability into a pdf format

    e. Ability to serve as a network printer

17. Computer network system:

    a. Networking computers, printers and copiers

18. Small Refrigerator and Microwave

M. All of the above equipment shall be new (except where specifically noted), or used (no older than 3 years) equipment in excellent condition, acceptable to the Engineer.

13.03.02. Contractor’s Office

A. The Contractor shall provide and maintain at the project site a suitable trailer office for Contractor’s use. Location of Contractor and sub-contractor office trailers shall be at the Contractor’s staging area shown on the Drawings, and shall be as approved by the Engineer. At this office shall be kept project copies of the Contract Documents, project progress records, project schedule, submittals, and other relevant documents which shall be accessible to the Engineer and other District employees during normal working hours.

Contractor's office shall have sufficient space for weekly and other conferences for up to 20 people to be held.

13.03.03. Removal and Disposal

A. The office facilities, furnishing, and/or equipment specified in this Article 13.03, "Office Facilities" shall be furnished, installed and in operating conditions prior to performing any other contract work under the Contract and shall be removed and disposed of within 20 days upon completion and acceptance of the Project by the District.

13.03.04. Payment

A. Full compensation for furnishing all labor, materials, tools, equipment and incidentals for doing all work involved in to provide office facilities including operating and maintenance costs as specified herein, as shown on the Drawings, as specified in these Specifications, and as directed by the Engineer shall be included in the lump sum price bid for MOBILIZATION, Bid Item No. 2, and Bid Additive Item Nos. 58, 84, and 121 if/when included in the awarded project by the District, and no separate payment will be made therefore.

13.04. Use of District Facilities

Does not apply to this project.

13.05. Temporary Utilities

A. Temporary Electrical Power: All electrical power for the Contractor's construction operations, offices, storage spaces, lighting, testing, heating, cooling, ventilating, security, and to support the other temporary utilities and facilities described herein shall be provided and paid for by the contractor. The Contractor shall arrange, at no additional cost to the District, with the local electrical utility to provide and remove adequate temporary electrical service and/or provide temporary electrical generator. The location of the temporary electrical service equipment will be subject to the approval of the Engineer.

B. Temporary Lighting: Provide temporary lighting in all work areas sufficient to maintain a lighting level during working hours not less than the lighting level required by California OSHA Standards. Shield and direct all temporary exterior lighting downward to minimize the effects on the neighbors.

C. Temporary Heating, Cooling, and Ventilation: Provide means for heating, cooling, and ventilating all work areas as may be required.

D. Temporary Water: (a) Pay for and construct facilities necessary to furnish potable water for human consumption and non-potable water for use during construction, (b) Provide backflow prevention devices properly sized for use on the metered

potable water connection, (c) Post ample signs throughout the work area warning of the usage of non-potable water if non-potable water is being used.

E. Temporary Sanitary Facilities: Sanitary facilities for the Contractor and all subcontractors shall be provided by the Contractor. Sanitary facilities shall be of reasonable capacity, properly maintained throughout the construction period, and obscured from public view wherever possible. At least one toilet shall e provided for each 20 workers.

F. Solid and Liquid Waste Disposal: Provide a sufficient number of waste receptacles, dumpsters, and bins to contain all solid and liquid waste generated from construction operations. Existing waste receptacles owned by the District shall not be used by the Contractor. Waste receptacles shall be emptied a minimum of weekly, and more frequently when full.

G. Temporary Fire Protection: Provide minimum of four (4) portable UL-rated, 20 pound, Class A fire extinguishers at temporary Contractor's, Engineer's, and similar office spaces. In al other areas of construction operations, provide a minimum of 12 UL-rated, 20 pound or larger, Class ABC dry chemical extinguishers or a combination of NFPA recommended classes for the exposure. Comply with NFPA 10 and 241 for classification, extinguishing agent, and size required by location and class of fire exposure. Comply with the Uniform Fire Code and Cal/OSHA regulations for the number of fire extinguishers.

H. Temporary Propane Service: If required for construction operations and temporary facilities, the Contractor shall arrange, at Contractor's own cost, with a local propane vendor to provide adequate temporary propane service. Contractor shall also obtain and pay for all required permits and fees form authorities having jurisdiction. Contractor shall pay all charges from the utility or vendor, including charges associated with the removal of the service at the end of the work. The location of the temporary propane service equipment shall be mutually agreeable to the Contractor and the Engineer. The Contractor shall provide all gas distribution system piping, regulators, and other incidentals necessary for safe service. Comply with NFPA 54, 55, and 58 applicable to this work.

I. Temporary Compressed Air: Provide compressors for compressed air for construction operations as required.

13.05.01. Payment

A. Full compensation for furnishing all labor, materials, tools, equipment and incidentals, and for doing all work required for providing temporary utilities, as shown on the Drawings, as specified in these Specifications, and as directed by the Engineer shall be included in the lump sum price bid for MOBILIZATION, Bid Item No. 2 and Bid Additive Item Nos. 58, 84, and 121 if/when included in the awarded project by the District, and no separate payment will be made therefore.

13.06. Staging Area

A. The Contractor is responsible for identifying and securing staging areas.

B. The Contractor is responsible for Staging areas that are not already paved or covered with compacted aggregate base, and that are used for parking vehicles, trailers, workshops, maintenance areas, or equipment, piping, formwork, rebar, storing masonry on pallets, and metal product storage, shall be graded as required, and surfaced with a minimum of 3 inches of compacted aggregate base rock over a high modulus, woven, and soil separation geo-textile. Areas storing aggregate base or other rock products shall also be placed on this same geo-textile. The objective is to maintain separation between native and construction materials. Areas storing soils and sand are not required to be surfaced with aggregate base course.

C. Aggregate base shall be removed from all staging areas prior to project completion and the surfaces shall be re-graded to their original grades or matching surrounding conditions as directed by the Engineer.

D. Any soils contaminated with petroleum product or other hazardous materials by the Contractor shall be removed by the Contractor and disposed of in accordance with local, state, and federal laws.

E. Contractor is responsible for weed control in staging areas and material storage areas.

13.06.01. Payment

A. Full compensation for furnishing all labor, materials, tools, equipment and incidentals, and for doing all work necessary to provide staging areas shall be included in the prices bid for various items of work and no additional payment will be made therefore.

13.07. District Furnished Materials and Equipment

A. The District will furnish the following materials to the Contractor.

- Four (4) project signs.

B. The Contractor shall install the District-furnished materials at the locations shown on the Drawings or as designated by the Engineer.

C. The Contractor shall be responsible for the transportation of District-furnished materials to the jobsite and to ascertain all information, dimensions, connections, and appurtenances required to provide for satisfactory installation of all District-furnished material.

13.07.01. Assignment of Contract for District-Procured Materials

Assignment of Contract for District-Procured Materials is not applicable to this project.

13.08. Salvaged Materials and Equipment

A. Materials designated to be recycled/salvaged by the Contractor shall be in accordance with Section 18.06, "Solid Materials Management" of these Specifications. All materials to be salvaged by the Contractor will be handled and removed with care and reused in accordance with these Specifications and as shown on the Drawings.

13.09. NOT USED

13.10. NOT USED

13.11. Maintenance of Record Documents

A. The Contractor shall maintain at the site the following record documents:

1. Contract Drawings (full size)
2. Specifications, addenda, and letters of Clarification
3. Favorably reviewed submittals including shop drawings, product data, samples, calculations, and other submittals.
4. Change orders, field orders, and other contract modifications.
5. Field test records.
6. Survey records.
7. Correspondence. (one copy minimum)
8. Approved samples (one copy, minimum)
9. SWPPP and BMP, including monitoring reports and daily activities

B. The Contractor shall store the record documents in an approved project site location apart from documents used for construction. Record documents are not to be used for construction purposes. The Contractor shall provide files and racks for orderly storage of the documents; maintain the documents in clean, dry, legible condition, and make all documents and samples available during regular business hours for inspection and reproduction by the Engineer.

C. The Contractor shall keep the record documents current with construction in progress. Completed construction work shall not be permanently concealed until required information has been recorded.

D. The Contractor shall label each record document except correspondence "PROJECT RECORD" in neat, large, printed letters.

E. The Contractor shall legibly mark contract drawings in red pencil or ink to record applicable changes as described in paragraph A.

F. The Contactor shall legibly mark specifications in red pencil or ink to record:

1. Manufacturer, trade name, catalog number and supplier of each product and item of equipment actually installed.

2. Changes made by change orders or field order.

3. Other matters not originally specified.

G. The Contractor shall review the updated field record drawings with the Engineer at the time of each application for payment. The Engineer reserves the right to withhold payment if the Contractor cannot substantiate that the field record drawings reflect the work progress.

H. At completion of construction, and prior to the final acceptance of the Project by the District, the Contractor shall deliver the Record Documents to the Engineer in accordance with Article 21.05.01, "Record Drawings and Specifications" of these Specifications.

13.11.01. Record Drawings (Marked-Up Drawings)

A. The Contractor is required to keep an accurately marked, up-to-date set of drawings for the work installed. Contractor shall record, as the work progresses, changes to the original Contract Drawings including, but not limited to, the following items:

1. Field changes or adjustments in the final location or in the final dimensions or details of the Work.

2. Changes resulting from requests for information, change orders, field orders and other contract modifications.

3. Horizontal and vertical Locations of underground and above ground utilities and appurtenances.

4. Details not included in the original Contract Drawings but incorporated into the Work, referenced to approved shop drawings, product data, samples, calculations, or other submittals.

5. Location of items embedded or concealed from view such as conduits, cables, junction boxes, piping, etc.

B. Changed work or conditions of the work covered up or concealed by the Contractor in advance of recordation of the Record Drawings shall be uncovered to allow accurate recordation of the change, then re-covered, all at the Contractor's expense.

C. Changes shall be marked directly on the Contract Drawings in accordance with the Guidelines for As-Built Markups provided in Appendix G. If there is insufficient space on a Drawing to mark up the change, the Contractor shall draw additional sketches to completely show the change and attach the sketches to the Drawing.

D. The Engineer has the right to review the Contractor's marked-up drawings at any time to ascertain that they are being kept up to date and show sufficient detail. Should the Contractor's marked-up drawings not be up to date or lack necessary detail, the Engineer may withhold 5 percent from each monthly progress payment, until the drawings are deemed acceptable by the Engineer. Such review by the Engineer shall not relieve the Contractor of its responsibility for keeping the Record Drawings current and complete.

E. The Record Drawings shall be stamped "AS-BUILT" and shall be, at completion of construction, signed and dated by the Contractor.

13.12. Emergency Work

A. The Contractor shall have personnel available on call for emergency work connected with those improvements, tie-ins, and modifications being completed as part of this work. Contractor on call personnel shall be able to be on site within 2 hours of verbal notice 24 hours a day, 7 days a week. Telephone numbers for these individuals shall be provided to the Engineer and shall be kept current.

13.13. Dispute Review Board, Bid Item No. 1B

13.13.01. General Requirements

A. A Dispute Review Board (DRB) process is required and shall be in accordance with Article 5.10, "Dispute Review Board" of these Specifications.

B. Immediately after award of the Contract, the District and the Contractor shall meet to discuss and establish the qualifications upon which nominees for the DRB are to be evaluated, and to jointly select prospective nominees.

C. The District, the Contractor and the DRB shall execute the DRB Three-Party Agreement at the first DRB meeting. A copy of the DRB Three-Party Agreement form is included in Appendix A. If there are conflicts between the provisions of

the DRB Three-Party Agreement and these specifications, the provisions of the DRB Three-Party Agreement shall take precedence.

D. The District and the Contractor shall each bear their respective in-house costs and costs of providing those DRB-related services for which such responsibility has been allocated herein.

E. The Contractor shall review and pay bills of DRB Members per the DRB Three-Party Agreement.

F. The District and the Contractor shall equally bear the cost of the DRB Member services in accordance with and as set forth in the DRB Three-Party Agreement and these Specifications. Reimbursement to the Contractor for the District's 50% share of the DRB Member services costs in accordance with the DRB Three-Party Agreement will be from Bid Item No. 1B.

13.13.02. Payment

A. Unless noted otherwise, full compensation for furnishing all labor, materials, tools, equipment and incidentals, and for doing all work required for doing all work involved in complying with all requirements under Section 13.13, "Dispute Review Board" including Contractor's in-house costs and DRB related services and Contractor's 50% share of the DRB Member services costs per the DRB Three-Party Agreement shall be considered incidental and included in the prices bid for the various items of work and no additional payment will be made therefore.

B. All bidders shall bid the amount shown on the bid form for Bid Item No. 1B, DISPUTE REVIEW BOARD. This amount is estimated only, and is reimbursed to the Contractor for the District's share of the DRB Member services (District's share) costs. This amount may constitute the sum of the Base Bid DRB plus that Bid Additive DRB, if any such are included in the awarded contract.

C. The amount paid under this item for reimbursement to the Contractor for District's share may vary from zero to the total amount of the item. Reimbursement will be for one-half of actual costs based on invoices from DRB members. Contractor shall submit request for reimbursement within monthly payment requests per Article 8.03 "Progress Payment". No Contractor mark-up to DRB Member services invoices will be allowed.

13.14. Escrow Bid Documents

A. The Contractor shall prepare and submit to the Engineer the Escrow Bid Documents in accordance with Article 5.11, "Escrow Bid Documents" of these Specifications.

B. Each subcontractor, whose total subcontract price exceeds 1.5 percent of the total price proposed by the bidder, shall provide separate Escrow Bid Documents to be included with those of the bidder.

13.15. Partnering

Contractor's attention is directed to Article 5.12 of the Standard Provisions.

13.16. Insurance

A. Without limiting the Contractor's indemnification of, or liability to, the District, the Contractor must provide and maintain at its own expense, during the term of this Contract, or as may be further required herein, the following insurance coverages and provisions:

1. Contractor must provide its insurance broker(s)/agent(s) with a copy of these requirements and warrants that these requirements have been reviewed by Contractor's insurance agent(s) and/or broker(s), who have been instructed by Contractor to procure the insurance coverage required herein.

2. In addition to certificates, Contractor must furnish District with copies of original endorsements affecting coverage required herein. The certificates and endorsements are to be signed by a person authorized by that insurer to bind coverage on its behalf. All endorsements and certificates are to be received and approved by District before the Contract commences. In the event of a claim or dispute, District has the right to require Contractor's insurer to provide complete, certified copies of all required pertinent insurance policies, including endorsements affecting the coverages required herein.

B. Contractor must, at its sole cost and expense, procure and maintain during the entire period of this Contract the following insurance coverage(s).

13.16.01. Required Coverages

A. Commercial General/Business Liability Insurance with coverage as indicated:

1. **$5,000,000.** per occurrence / **$5,000,000.** aggregate limits for bodily injury and property damage

2. **$5,000,000.** Products/Completed Operations aggregate (to be maintained for at least three (3) years following acceptance of the work by District.

3. General Liability insurance must include:

a. Coverage at least as broad as found in standard ISO form CG 00 01.

b. Premises and Operations
c. Contractual Liability expressly including liability assumed under this contract.
d. If Consultant will be working within fifty (50) feet of a railroad or light rail operation, any exclusion as to performance of operations within the vicinity of any railroad bridge, trestle, track, roadbed, tunnel, overpass, underpass, or crossway must be deleted, or a railroad protective policy in the above amounts provided.
e. Owners and Contractors' Protective liability
f. Severability of Interest
g. Explosion, Collapse and Underground Hazards, (X,C, and U)
h. Broad Form Property Damage liability
i. If the standard ISO Form wording for "OTHER INSURANCE," or other comparable wording, is not contained in Consultant's liability insurance policy, an endorsement must be provided that said insurance will be primary insurance and any insurance or self-insurance maintained by District, its Directors, officers, employees, agents or volunteers will be in excess of Consultant's insurance and will not contribute to it.

B. Business Auto Liability Insurance with coverage as indicated:

1. **$2,000,000.** combined single limit for bodily injury and property damage per occurrence, covering all owned, non-owned and hired vehicles.

C. Builders' Risk (Course of Construction) Insurance

1. Covering all risks of loss less policy exclusions for an amount equal to the completed value of the project with no coinsurance penalty provisions. Builder's Risk policy shall name Santa Clara Valley Water District as loss payee.

D. Workers' Compensation and Employer's Liability Insurance

1. Statutory California Workers' Compensation coverage covering all work to be performed for the District.

2. Employer Liability coverage for not less than **$1,000,000** per occurrence.

E. Surety Bonds

1. Contractor shall provide the following Surety Bonds:

a. A bid bond as specified in the Notice to Bidders.
b. A performance bond as specified in Article 4.03, "Contract Bonds".
c. A payment bond as specified in Article 4.03, "Contract Bonds".

13.16.02. General Requirements

A. Additional Insured Endorsement(s)**:** Contractor must provide an additional insured endorsement for Commercial General/Business Liability and Business Automobile liability coverage naming the Santa Clara Valley Water District, its Directors, officers, employees, and agents, RMC Water and Environmental, CH2MHiII, Ruggeri-Jensen-Azar & Associates, Biggs Cardoza Associates, SSA, Parikh Consultants, Schaaf & Wheeler individually and collectively**,** as additional insureds, and must provide coverage for acts, omissions, etc. arising out of the named insureds' activities and work. The following public entities shall also be added to the additional insured endorsement:

City of San Jose
Santa Clara County
VTA
San Jose Water Company

(**NOTE:** Additional insured language on the Certificate of Insurance is **NOT** acceptable without a separate endorsement such as Form CG 20 10, CG 2033, CG 2037. Note: Editions dated 07/04 are not acceptable)

B. Primacy Clause: Contractor's insurance must be primary with respect to any other insurance that may be carried by the District, its officer, agents and employees, and the District's coverage must not be called upon to contribute or share in the loss.

C. Cancellation Clause Revision: The Certificate of Insurance must provide **30** days notice of cancellation, (10 days notice for non-payment of premium). NOTE: The standard wording in the ISO Certificate of Insurance is <u>not</u> acceptable. The following words must be crossed out or deleted from the standard cancellation clause: "_____endeavor to_____" AND "_____but failure to mail such notice must impose no obligation or liability of any kind upon the company, its agents or representatives."

D. Acceptability of Insurers: All coverages must be issued by companies admitted to conduct business in the State of California, which hold a current policy holder's alphabetic and financial size category rating of not less than A- V, according to the current Best's Key Rating Guide or a company of equal financial stability that is approved by the District's Risk Management Administrator.

E. Self-Insured Retentions or Deductibles: Any deductibles or self-insured retentions must be declared to and approved by the District. At the option of the District, either: the insurer shall reduce or eliminate such deductibles or self-insured retentions as respects the District, its officers, officials, employees and volunteers; or the Contractor shall provide a financial guarantee satisfactory to the Entity guaranteeing payment of losses and related investigations, claim administration, and defense expenses.

F. Subcontractors: The Contractor must require each of its subcontractors of any tier to carry the aforementioned coverages, or Contractors may insure subcontractors under its own policies.

G. Amount of Liability not Limited to Amount of Insurance: The insurance procured by Contractor for the benefit of the District must not be deemed to release or limit any liability of Contractor. Damages recoverable by the District for any liability of Contractor must, in any event, not be limited by the amount of the required insurance coverage.

H. Coverage to be Occurrence Based: All coverage must be occurrence-based coverage. Claims-made coverage is not allowed.

I. Waiver of Subrogation: Contractor agrees on to waive subrogation against the District to the extent any loss suffered by Contractor is covered by any Commercial General Liability policy, Automobile policy, Workers' Compensation policy, or Builders' Risk policy described in Article 13.16.01, "Required Coverages" above. Contractor agrees to advise its broker/agent/insurer about this provision and obtain any endorsements, if needed, necessary to ensure the insurer agrees.

J. Non-compliance: The District reserves the right to withhold payments to the Contractor in the event of material noncompliance with the insurance requirements outlined above.

K. The Contractor shall mail or deliver the certificates and endorsements to:

Capital Program Planning & Analysis
Unit Manager
Santa Clara Valley Water District

See District website (http://www.valleywater.org/ContactUs.aspx) for appropriate address to mail, express mail, or hand carry.

L. The certificate of insurance must include the name of the project.

M. For any questions, the Contractor's insurance broker is advised to call Mr. David Cahen, District Risk Management Administrator at (408) 265-2607, extension 2213.

13.17 Environmental Protection Training

A. The Contractor is hereby informed that all supervisory-level personnel must attend an environmental protection training workshop before working on the Project site. All other personnel must attend an environmental protection-training workshop within 7 days of beginning work.

B. Environmental protection-training will be conducted by the District and will include the following: a. one (1) half day training workshop for all supervisory level staff and b. one (1) 20 minute “tail gate” type meeting for all staff below the supervisory level.

C. Upon completion of training, personnel will be provided with an “Environmental Protection Training” sticker to be placed on their hard hat. This sticker will be required for all future site access and will be valid for a period of one (1) year.

D. Environmental Issues to be covered during the special training session include the following: Water Quality Protection, Erosion Control, Hazardous Waste Handling, Cultural Resources and Historical Artifacts, Application of Best Management Practices, and Relationships with Regulatory Agencies.

13.18. Payment

A. Unless noted otherwise, full compensation for furnishing all labor, materials, tools, equipment and incidentals, and for doing all work involved in complying with all requirements under Section 13, “Special Requirements” shall be considered incidental and included in the prices bid for the various items of work and no additional payment will be made therefore.

SECTION 14. GENERAL COORDINATION

14.01. Meeting Requirements

A. This Article includes requirements for scheduling, attending, and conducting project meetings for the purposes of addressing issues related to the work, and reviewing and coordinating progress of the work. Project meetings include the pre-construction meeting, progress meetings, coordination meetings, and special meetings as specified herein.

B. Qualifications of Meeting Participants—Representatives of firms and organizations participating in each meeting shall be qualified and authorized to act on the behalf of the firm or organization they represent.

14.01.01. Preconstruction Meeting

A. The purpose of the preconstruction meeting is to review the Project, to designate responsible personnel, and to inform the Contractor of the District's contract administrative procedures, correspondence communication protocol, and other special requirements of the Contract.

B. Upon or before issuance of Notice to Begin Work, the Engineer will arrange the preconstruction meeting. The Contractor will be notified of the time, date and place where the preconstruction meeting will be held. The Engineer will prepare the agenda; preside at the meeting, and record meeting minutes.

14.01.02. Progress Meetings

A. The Engineer will conduct progress meetings on a regular weekday and time as mutually agreed by the Contractor and the Engineer. The purpose of the progress meetings is to review construction progress, submittal status, change order status, construction safety issues and concerns, conflicts, public/neighborhood issues, progress payments, and any other subjects as deemed appropriate.

B. The Contractor shall allow for one meeting a week, one hour minimum for each meeting.

C. Subject to the Engineer's approval, the frequency of the progress meetings may be reduced at the beginning and end of the construction period.

D. Contractor's suppliers and subcontractors shall attend the meetings as required. Third parties such as agency representatives and utilities may be invited by the Engineer to attend as deemed appropriate.

E. The Engineer will record meeting minutes as needed, and will distribute the agenda and recorded minutes in advance of the meeting.

14.01.03. Coordination and Special Meetings

A. The Engineer will conduct other coordination and special meetings in addition to progress meetings when appropriate. The purpose of these meetings is to discuss and coordinate shutdowns, outage, utility tie-ins, and any other special issues as deemed necessary. Other outside agencies, utility purveyors, and other necessary entities will be notified when necessary.

B. The Contractor shall schedule meetings with subcontractors, manufacturers and installers of major units of construction which require coordination between subcontractors. It is the Contractor's responsibility to determine in advance, in coordination with the Engineer, which meetings are necessary and to accommodate such meetings in the constructions schedule. At minimum, the following major units of construction shall require pre-installation meetings:

1. Sanitary Sewer Siphons
2. Precast RCB Units
3. Lyndale Pedestrian Bridge

C. Date, time, and location for coordination and special meetings will be as mutually agreed by the Engineer and the Contractor.

D. The Contractor shall ensure attendance of appropriate Contractor staff, subcontractors, and suppliers.

E. The Engineer will ensure attendance of necessary District Staff, Consultants, and representatives.

F. The Engineer will record meeting minutes as needed, and will distribute the agenda and recorded minutes in advance of the meeting.

14.02. Integration and Coordination With District Operations

14.02.01. Overview of Existing Systems and Facilities

A. The following is a cursory overview of typical processes, functions, and work within the Lower Silver Creek Channel. Not all items listed are shown on the Drawings.

1. Storm Water Conveyance 24 hours per day, every day of the year.

2. Storm water outfall into the channel 24 hours per day, every day of the year.

3. Operation of Public and Private Streets

4. Access to adjacent properties

5. Channel maintenance by District staff before/after storm events as necessary

14.02.02. Requirements of an Operational Facility or System

A. The Lower Silver Creek Channel is the regular conveyance of storm water for a large drainage basin within the Santa Clara Valley. Facility operation must continue at all times, 24 hours a day, every day of the year during the construction of this work. Facilities or conditions required to keep the existing channel operational include, but are not limited to, the following:

1. Channel storm water runoff conveyance. See Section 22.05 “Control of Water” in these Specifications.

2. All storm water runoff entering the channel through storm drain outfalls, overland conveyance or other means shall be accommodated 24 hours per day, every day of the year per Section 22.05 “Control of Water” of these Specifications.

3. Public and private street traffic and pedestrian access shall be maintained per Article 27 “Traffic Control” of these Specifications.4. Access to properties owned by others shall be accommodated per Section 15.06 “Access to Properties Owned by Others” of these Specifications’

B. Cooperate with District, Conduct the work, and provide temporary facilities and accesses required to maintain channel access before, during and after storm events.

14.03. Coordination of Work Activities

14.03.01. Work by Others

A. The Contractor’s attention is directed to Section 7-1.14 of the State Specifications and Article 6.19, “Cooperation with Others” of these Specifications regarding cooperation. The Contractor is responsible for determining what work is planned in the project vicinity by others during the duration of the project that will require cooperation, and for accommodating such work by other, and coordinating and scheduling for it in the Contractor’s Construction Schedule. No additional payments will be made or claims considered for coordination and scheduling required, or delay caused to this Contract because of conflicts with other construction.

B. The Contractor shall complete the following activities as requested by the Engineer to assist in the coordination of Contract work with work by others: attend planning meetings; review and comment on project documents relative to coordination aspects; schedule work to promote efficient installation of all improvements; move equipment, materials, or vehicles to allow work by others to proceed; and other reasonable activities.

C. This District may perform channel maintenance activities, especially before, during or after a storm event.

D. The Contractor is advised that the known construction projects may take place during the work of this Contract:

1. San Jose Water Company, AT&T, Comcast, etc. – Work related to Section 15.02.03 of these Specifications. These modifications will take place concurrently with this work, and require Contractor coordination.

2. Pacific Gas & Electric Company (PG&E) – PG&E will be completing work related to Section 15.02.03 of these Specifications. Additionally, power needs for construction trailers and Contractor's construction needs may be provided by PG&E as agreed by the Contractor and PG&E at no additional cost to the District.

3. City of San Jose Jackson Avenue slurry sealing and pavement project.

4. The Santa Clara Valley Transportation Agency will be building its Pedestrian Improvements Project along Capitol Expressway and adjacent streets. Contractor will provide on-going coordination of work.

14.03.02. Coordination With Others

A. Contractor is responsible for coordinating with others required to complete the work on schedule.

14.04. Construction Survey

A. This Article establishes the minimum requirements for construction surveying. The Contractor shall hire a qualified independent surveying firm to conduct the construction surveys. All field/construction surveys shall be performed under the direction of a Licensed Land Surveyor, or Civil Engineer authorized to practice land surveying in California, per Article 5 Section 8773 of the California Business and Professions Code. The Contractor shall submit for review and approval the resume of qualifications of the independent surveying firm and the supervising Licensed Land Surveyor, or Civil Engineer.

B. The Contractor shall notify the District in writing a minimum of 2 working days before starting operations that require construction staking related work.

C. The Contractor shall be solely responsible for the measurements and layout of the Project from the given line and grade stakes, slope stakes, and offset stakes. Any questions with regard to interpretation of project layout shall be resolved by the Engineer.

D. The Contractor's independent surveying firm will provide all construction staking services including, but not limited to:

1. Establishment and maintain all Project construction survey field control points, baselines and reference points as required for construction layout survey.

2. Contractor's Engineer shall verify locations of survey control points prior to starting any work on the Project site. Any discrepancies between the Contractor's surveyor's measurements and the Drawings shall be brought to the Engineer's attention immediately.

3. Set reference points (RP's) with elevations to key alignment stations: Begin Project, Beginning of Curves (BC's), end of Curves (EC's), Point of Intersections (PI's), Equation Stations (Eq. Sta.), Grade Breaks, beginning and end points of vertical curves (VPC & VPT), and End Project.

4. Set intermediate stakes at fifty (50) foot intervals along tangents and twenty-five (25)-foot intervals along curves.

5. Set slope stakes to determine location of intersection of design grade and original ground at fifty (50) foot intervals along tangents and twenty-five (25)-foot intervals along curves.

6. Slope stakes for the 1:5:1 slopes shall be provided. Slopes shall not be constructed relying solely on construction equipment mounted GPS.

7. Line and grade stake for facilities such as utilities, structures, ramps, walls, RCB's, pedestrian bridge, maintenances road and transitions.

E. Survey stakes, reference points, and benchmarks destroyed or removed by the Contractor will be replaced by the Contractor at his expense.

F. The Contractor shall assure that the Contractor's surveyor surveys all points of connection to existing structures or underground utilities prior of beginning the installation of new structures or facilities to confirm the actual locations and grades. Significant deviations shall be reported in writing to the Engineer prior to proceeding with the installation of new facilities.

G. Finish grade surface elevations not conforming to following tolerances shall be reported to the Engineer and corrected by the Contractor to the Engineer's satisfaction, at the Contractor's expense:

Surface	Tolerances (feet)
Channel bottom	+0.0 to 0.1
Subgrade for channel bottom protection	+0.0 to 0.3
Channel side slopes	+0.0 to 0.1
Concrete flood walls	+0.0 to 0.05

H. Measurement of Quantities for Excavation and Placement:

Measure of quantities for payment under Article 23.01 "Excavation and Embankment", pre-construction and post-construction surveys shall be conducted as follows: The Contractor's Survey shall conduct the surveys and calculate the quantities for payment as stipulated in these Specifications. No adjustment will be made to the cross sections for quantity calculations to account for clearing and grubbing or stripping.

The measurements shall be performed as each construction work area is completed. The work shall include the number of survey move-ins necessary to accommodate the Contractor's operations and construction staging.

The pre-construction and post-construction surveys shall be done at 50-foot intervals for the entire excavation limit. The Contractor shall provide additional cross-sections at the beginnings and ends of excavation, access ramps, and channel bank transitions at the locations shown in Drawings and as directed by the Engineer. The cross-sections shall include grade breaks, tops and bottoms of banks from right of way to right of way. The locations and elevations of the centerline and water level of the creek, utilities and improvements are not required to be included in the surveys. The total excavation volume shall be computed in cubic yards by the average end area method utilizing all the pre-construction and post-construction cross-sections. The Contractor will be paid according to the actual channel excavation determined by this method. If the post construction survey is performed after installation of the new maintenance road and/or erosion control blankets, the Engineer will make adjustment to the survey data to account for these features.

The Contractor shall submit all surveyed points for quantity surveys in ASCII format in hard copy and electronic format; plots of the cross-sections in AutoCAD format in hard copy and electronic format; and a hard copy of the quantity calculations to the Engineer for review and approval. Submittal of pre-construction surveys shall be made as soon as they are completed for review and approval by the Engineer in the event that there are any discrepancies found during this review; the Contractor shall be responsible for reconciling said differences to the satisfaction of the Engineer prior to construction, at Contractor's expense and no additional cost to the District.

I. The Contractor shall not remove or disturb survey monuments and permanent markers unless the Contractor has recorded and referenced the locations of survey monuments and permanent markers that are anticipated to be disturbed or removed as approved by the Engineer. The Contractor shall be responsible for the restoration or replacement of survey monuments and permanent markers to the satisfaction of the Engineer, and for causing a Corner Record to be filed with the County of Santa Clara by a Licensed Land Surveyor, or Civil Engineer authorized to practice land surveying in California, per Article 5 Section 8773 of the California Business and Professions Code.

J. The relocation and protection of survey monuments shall be in accordance with Section 15.03.01, “Survey Monuments” of these Specifications.

14.05. Public Notification

A. The Engineer is responsible for written and oral communication with the public and neighbors related to notification concerning major construction operations. The Contractor shall provide the Engineer with the schedules of major construction operations three weeks in advance of their occurrence to allow the District time to notify the neighbors. The Contractor shall include in the submittals the major milestones, descriptions of the work activities, and the start and end date(s) of each activity.

B. The major construction operations schedule submittals shall include, but not be limited to, activities affecting the public, such as:

- traffic control measures,
- traffic phase changes,
- creek dewatering,
- material deliveries and/or haul-off,
- concrete pouring near public streets, pile driving public streets,
- asphalt paving, striping, etc. in public streets
- utility relocation, etc

C. The Engineer will provide the above schedules two weeks in advance as well as 24-hour notices to all property owners and tenants adjacent to the project site and to others potentially impacted by the construction activities. If for any reason, any construction activity is anticipated to be delayed for more than one week beyond the aforementioned schedule, the Contractor shall notify the Engineer immediately, submit the revised schedule, and explain the delay. The delay notice shall be given to the Engineer no later than one week prior to the performing the activity.

D. All payments for coordinating the work and providing submittals as specified shall be considered incidental and included in the other items of work and no additional compensation will be made thereof.

14.06. Payment

A. Unless noted otherwise, full compensation for furnishing all labor, materials, tools, equipment and incidentals, and for doing all work involved in complying with all requirements under Section 14, “General Coordination” shall be considered incidental and included in the prices bid for the various items of work and no additional payment will be made therefore.

SECTION 15. WORK CONSTRAINTS AND SITE RESTRICTIONS

15.01. General Work Constraints

15.02. Utilities

A. The Contractor's attention is directed to Article 6.14, "Preservation of Property" and Article 7.10, "Coordination with Utilities" of these Specifications.

B. Various existing utilities, both above and below ground, will be encountered during construction. The Contractor shall perform all work in such a manner as to avoid damage to existing utilities. The Contractor will be held responsible for any damage due to his/her failure to exercise due care.

C. The Contractor shall notify Underground Service Alert (U.S.A.) a minimum of 5 working days prior to start of excavation or demolition.

D. The Contractor shall verify the exact location of all indicated or field marked utilities and make a sufficient number of exploratory excavations of all utilities that may interfere with the work sufficiently in advance of the construction. Contractor shall perform exploratory excavations in the presence of the owner of the utility to be explored. Contractor shall promptly notify the Engineer when such exploratory excavations show the utility location as shown on the Drawings to be in error.

E. The Contractor shall not interrupt the service function or disturb the support of any utility without authority from the utility owner or order from the Engineer. All valves, switches, vaults, and meters shall be maintained and be readily accessible for emergency shutoff.

15.02.01. Utility Coordination

A. The District and the owners of utilities or their authorized agents reserve the right to enter upon the right of way at all times for the purpose of operations and maintenance of their facilities or for making necessary connections or repairs to their properties. The Contractor shall cooperate with the District and the affected utilities engaged in such work to avoid any unnecessary delay or hindrance to such work.

B. The last known contact information of known utilities that may be encountered are:

Utility	Contact	Office Phone	Cell/Email
PG&E:	Sharon Kennedy	(408) 299-1053	slkd@pge.com
AT&T:	Laura Wendover	(408) 493-8770	Lw9793@att.com
San Jose Water Co.:	Kurt Hoffman	(408) 279-7870	(408) 639-8506
Comcast:	Steve Morioka	(408) 918-3245	Steve_Morioka@ cable.comcast.com
Sunesys:	Saul Valverde	(408) 408-2567 Ext.19	(408) 466-8916
City of San Jose:	See permit		
County of Santa Clara:	See permit		

It is the Contractor's responsibility to confirm and/or update all contact information.

C. Contractor shall be responsible for the coordination of work near utilities and the protection of the utility during construction. Where it is known or anticipated that an existing utility will be encountered during construction, the Contractor shall be responsible for notifying and/or supplying appropriate Drawings to the affected utility's owner at least 5 working days in advance of work in which the utility will be involved, unless additional notification is noted or required in Section 15.02.

D. Contractor to conduct utility coordination meeting with all utility owners. The meeting shall review Contractor and utility owner schedules and set coordination communication protocol. Contractor is to notify utility owners at least once a month on the status of the construction for each utility line and when utility owner's action is requested.

E. No work that interferes with public traffic shall be performed before 8:15 A.M. nor after 4:15 P.M. on minor streets; before 8:30 A.M. nor after 3:30 P.M. on major streets; and before 9:00 A.M. nor after 3:00 P.M. within or near a signalized intersection.

F. Contractor shall be responsible for maintaining storm drain and sanitary sewer system flows without interruption. Contractor is responsible for bypass pumping if required. The design of the bypass arrangement shall be prepared by the Contractor and submitted to the Engineer. The contractor shall notify Engineer 2 days prior to shutting down and bypassing the main.

15.02.02. Protection of Existing Utilities

A. The Contractor is responsible for doing all work and furnishing all materials required for protecting in place or restoring all existing above and below ground utilities disturbed or damaged during construction to a condition equal to or better

than that existing prior to construction unless utility company chooses to fix damaged utility themselves, in which case Contractor will be billed for restoration work. Payment for complying with this provision shall be considered as included in the price paid for other items of work and no additional compensation will be made.

B. The Contractor shall protect all utilities which may be impacted by the work. All exposed utilities shall be supported firmly and uniformly, conforming to the utility requirements. No utilities shall be left exposed for a period exceeding 8 hours unless approved by the utility and the Engineer. Unless otherwise shown on the Drawings or these Specifications, all utilities shall be backfilled with at least 12 inches of select backfill around the utility.

C. All utility poles and guy anchors shall be protected and, where the walls of the trench are within 5 feet of a pole or anchor, lateral support to the pole shall be provided at the Contractor's expense.

D. The Contractor shall immediately notify the utility owner and the Engineer prior to excavation if any existing utilities which have sustained damage, or if any existing utility is disturbed or damaged during the excavation. The Contractor shall bear the cost of repair or replacement of any utility damaged as a result of construction operation.

E. In no case shall any service (gas, water, electricity, telephone, etc.) be interrupted unless planned with the utility owner and stated in Article 15.02.03 "Utility Installation/Relocation". If it is impractical to support the utility across trench excavations, the Contractor may remove the services, provided a temporary bypass has been coordinated with the utility owner installed and is operational prior to the removal.

F. See Section 15.02.03 "Utility Installation/Relocation" for location – specific information.

15.02.03. Utility Installation/Relocation

A. The utility owner(s) are expected to relocate utility lines within the limits of work or within temporary construction easements. These are lead-time items. The Contractor shall coordinate his activities, coordinate with all utility owners and shall fully cooperate with the utility owner so as to not hinder or interrupt the assigned task of utility owner's personnel or contractors. All expected work and time frames described in this Article are for informational purposes and are not intended to be a complete list or to dictate the Contractor's method of work. It is the Contractor's responsibility to coordinate with all Utility Companies, determine his order and method of work necessary to accommodate the Utility Company requirements.

B. Base Bid (Interstate 680 to N. Babb Creek)

The Contractor's attention is directed to Articles 15.02, "Utilities", 15.02.01 "Protection of Existing Utilities", and 15.02.03 "Utility Installation/Relocation", paragraph A.

1. 130+37+/- AT&T Light Speed Cabinet: Contractor shall coordinate with AT&T to protect the Light Speed Cabinet, in place, or the duration of the construction within its vicinity, including protection during traffic control Phases 2 and 3.

2. 130+45+/-City of San Jose (CSJ) Electrical line at Jackson Ave: Existing CSJ street light lines currently cross above the existing culverts. In coordination with City, Contractor will remove existing conduits and electrolier as shown on plans.

   - Once new culvert is installed Contractor shall install new lines, conduits and reinstall electrolier prior to placement of new sidewalk.

3. 131+15+/-AT&T 2-inch conduit at Jackson Ave: AT&T is expected to splice slack into the service drop at this location prior to construction. Contractor shall call AT&T contact listed in Section 15.02.01 at least one month prior to start of work near AT&T service drop currently located over the culvert in the street on the east side of Jackson Ave., just past the curb and gutter. In coordination with AT&T, Contractor shall expose AT&T 2-inch conduit and notify AT&T. AT&T will remove conduit and is anticipated to provide a split duct over the drop and tie this to a support that shall be provided by the Contract. Split duct and any other temporary facilities shall be protected and supported in place during construction. No traffic shall be allowed to drive on the split duct. Approximately one week before expected re-installation of AT&T conduit, Contractor shall call AT&T Contact to confirm date. AT&T conduit will be re-installed (in new sidewalk) on top of culvert by Contractor. Contractor is to coordinate conduit placement with AT&T. Contractor is to receive AT&T approval before encasing conduit in concrete.

4. 131+20+/-PG&E 3-inch Gas Pipeline at Jackson Ave: This is a lead-time item. The Contractor is responsible for planning and implementing the ongoing coordination and accommodate it in the Contractor's Construction Schedule. In general, the construction and coordination is expected to approximate the following:

   - At least three months prior to anticipated work at Jackson Ave., Contractor (through the District) will issue a written notice of intent to PG&E Contact that work will be done at this location. Once this notice is received, the PG&E Contact is expected to put the work on their internal schedule. It is the Contractor's responsibility for maintaining

contact, through the District, with PG&E to assure the work has been scheduled and remains on the schedule.

- At least one month prior to construction, Contractor (through the District) will communicate with PG&E contact to confirm that the scheduled date still holds.

- At least three weeks prior to the construction date scheduled with PG&E, Contractor shall call PG&E Inspector (408) 299-1024 to schedule inspection. Contractor shall site PG&E job number during this call. Once inspection is scheduled, Contractor shall with in coordination with PG&E knowledge and permission dig bellholes to expose the shut down locations on the PG&E gas line. Bellholes shall meet PG&E requirements for entry. Cover and protect bellholes.

- Once the bellholes are approved by the inspector, PG&E is expected to cut and cap the gas line on each side on the date pre-scheduled by Contractor after the bellhole inspection is completed. This gas line can be shut down for up to three months in total. The gas line can only be shut down between March 1 and October 1. Contractor shall remove and dispose of existing sleeve after the line is shut down by PG&E. At this time Contractor shall schedule a date with the PG&E Contact for installation of the new gas line. Contractor shall call and send an email update to PG&E Contact to keep contact appraised of progress and construction schedule for installation of new gas line.

- Contractor shall perform work at location within this shutdown period.

- Once new reinforced box culverts are installed, Contractor shall trench from bellhole to bellhole so new gas line can be installed. Contractor to install a 6-inch steel sleeve for new PG&E gas line across the new culverts. Contractor to coordinate sleeve location and PG&E tie-in locations with PG&E. Before sleeve is placed in trench, Contractor shall cut a one foot longitudinal half of the sleeve off of each side.

- Contractor shall call PG&E Contact 48 hours before the sleeve is completed and PG&E will arrive to install gas line per pre-scheduled date. Contractor shall coordinate with PG&E to ensure the sleeve and trench meet PG&E requirements.

- Once gas line is installed, Contractor shall weld the new sleeve to the existing sleeve and seal the sleeve.

- Once gas line is installed, Contractor shall be responsible for all backfill and paving over gas line and sleeve.

5. 131+22+/- San Jose Water company (SJWC) 12-inch water pipeline at Jackson Ave: Contractor (through District) will notify SJWC at least two months prior to construction at this location. Contractor shall contact SJWC throughout the work as Contractor deems necessary and again at least one week before the start of construction in this area to confirm schedule. Contractor shall coordinate with SJWC for SJWC to mobilize to cap the existing water main at two locations, one at each side of Lower Silver Creek. Contractor shall then cut and remove existing main. SJWC pipeline can be capped for a maximum of three months. No extensions to this schedule shall be granted.

   Contractor shall notify SJWC at least one month prior to anticipated reinstallation of water line. Contractor shall call SJWC again as necessary and at least one week before expected water relocation work to confirm schedule. SJWC will then install a new water line across new culvert at STA 130+44+/- and reconnect caps. SJWC will also reactivate water line and replace disrupted section of bus pad on south side of creek. SJWC will be responsible for final sidewalk and driveway work at connection points beyond project limits of work. Contractor to coordinate with SJWC to provide SJWC a window of approximately 3 weeks to relocate water line. After new water line is installed, SJWC will abandon the existing water line crossing the creek. Contractor shall remove and dispose of existing pipe over creek as needed to construct new culvert.

6. 131+23+/- PG&E Electrical (4-inch primary, 4-inch secondary, and empty 6-inch) at Jackson Avenue Crossing: This is a lead-time item. The Contractor is responsible for planning and implementing the ongoing coordination. In general, the construction and coordination is expected to approximate the following:

   - Contractor shall coordinate as necessary for PG&E shall remove all underground cables and install a shoefly to temporarily overhead the electrical lines in prior to the commencement of the Phase 3 Jackson Avenue improvement work.

   - One of the temporary poles is expected to be located near the air raid siren in the sidewalk on Jackson Ave. A third pole might also be required. The other temporary pole will be approximately 300 feet away, across the creek.

   - Contractor shall protect lines in place during all construction operations.

   - Once the new culverts are installed, Contractor shall in coordination with PG&E install new conduits (4-inch, 4-inch, and 6-inch) over new culvert and connect to existing/old conduits on each side of box culvert. Cap spare 6-inch line of connection not available.

- Contractor to call PG&E contact to schedule inspection of conduit installation 48 hours in advance of conduit installation. Contractor shall meet PG&E installation and inspection requirements.

- After new conduits are installed, Contractor shall coordinate for PG&E to relocate their electrical lines back into the underground conduits.

- PG&E expects this to take 10-16 weeks to relocate the temporary overhead lines back into the new underground conduits.

- Contractor shall be responsible for all backfill and paving over PG&E facilities.

7. 134+81+/- Joint Pole Guy Wire: Contractor shall protect this joint pole guy wire in place or Contractor may coordinate with PG&E to have it relocated.

8. 134+81+/ Sunesys Guy Wire: Sunesys is to remove guy wire from District property. Sunesys will coordinate with PG&E to have their facilities supported by new span guy that PG&E is installing to pole across creek. Contractor to coordinate timing with Construction Schedule.

9. 135+88+/- Comcast Guy Wire: Sunesys is to remove guy wire from District property. Contractor to coordinate timing with Construction Schedule.

10. 137+51+/- Sunesys Guy Wire: Sunesys is remove guy wire from District property. Contractor to coordinate timing with construction Schedule.

    142+41+/- Joint Pole Guy Wire: Contractor shall protect joint pole guy wire in place or Contractor may coordinate with PG&E to have it relocated.

11. 142+41+/- Sunesys Guy Wire: Sunesys is to remove guy wire from District property. Contractor to coordinate timing with construction schedule.

12. 143+29+/- PG&E Gas Transmission Lines:

    - Contractor shall protect the three gas transmission lines in place for all construction activities both prior to and post relocation.

- Contractor must comply with the wheel loading criteria listed in the table below. These limits may not be exceeded without prior approval from PG&E and the Engineer. Any support structures/bridge crossing the pipelines must be reviewed and approved by PG&E. Contractor submittals to PG&E will require a minimum three week review period.

Allowable Wheel Loading for PG&E's Gas Transmission Lines at STA 143+29+/-

	Maximum Pounds per Wheel	
Cover (feet)	Prior to Replacement	Post Replacement
< 2	Hand dig	Hand dig
2	5,100	8,800
3	9,100	13,200
4	12,500	18,100
5	15,600	23,000
6	18,600	27,900
7	21,100	32,200
8	22,800	35,300

Notes:
1. A wheel is considered to be equivalent to half of an axle.
2. Minimally invasive construction techniques must be utilized to minimize damage to the lines and ensure public safety.
3. These limits will be enforced within 5 feet of the pipelines.

- PG&E inspectors may be required to be present at all times when Contractor is working adjacent to the gas transmission lines. Contractor shall coordinate required inspections with PG&E.

- PG&E may require excavation to be done by hand around the gas transmission lines.

- PG&E is expected to relocate the gas transmission lines between June 15 to September 1, 2011. Two of the three transmission lines will be relocated. The third transmission line will be uncovered to allow for the installation of pipe protection measures by PG&E. The PG&E worksite shall be from STA 142+00 to Station 144+50. The worksite will also include PG&E right-of-way and easements between Bambi Lane to Dobern Avenue.

- Contractor shall provide a benchmark within the gas transmission line relocation worksite. Contractor shall also survey the existing pipe after it has been uncovered to confirm elevations. Any deviation of

horizontal or vertical location from the expected shall be brought to the Engineer's attention immediately.

- Contractor shall divert creek water per these Specifications for PG&E via bypass piping through the gas transmission pipeline relocation site and shall provide a connection into the bypass pipe for the excess water generated by PG&E's dewatering activities. Contractor shall also coordinate with PG&E regarding the support of the diversion pipe across trenches and to move the diversion pipe within the channel as necessary to facilitate PG&E's construction efforts.

- PG&E will backfill and grade site to final elevations 5 feet upstream and 5 feet downstream the pipeline limits. Contractor shall provide PG&E with the survey information for this work and will provide rock lining materials for installation around the gas transmission lines. Contractor shall be responsible for placing maintenance road armoring aggregate after PG&E has completed its work.

- Prior to backfill and grading by PG&E, Contactor shall survey the new gas transmission pipeline locations for as-built purposes and for use during the remainder of construction (i.e. floodwall installation). Contractor shall coordinate with PG&E to assure the survey is performed before pipe backfill.

- PG&E will require complete access to this area without Contractor interference or access with the exception of aforementioned survey and bypass pipe related coordination activities for the PG&E construction period unless prior approval has been attained from PG&E.

- When installing the floodwall drilled pier piles and rock slope protection above the gas transmission line, the Contractor shall hand dig (i.e. pothole using a vacuum type rig) prior to drilling to ensure pipes are not compromised. All such work shall be coordinated by Contractor with PG&E.

13. <u>154+86+/- PG&E 2-inch Gas Line:</u> PG&E to provide new gas line for homes in the northwest corner of the Lower Silver Creek and Capitol Expressway so the existing line can be abandoned for the new culvert installation. The new gas line will be installed at approximately 50+/- feet north of Lower Silver Creek from the 4-inch line at 156+55 to the existing 2-inch line at 154+86. PG&E is expected to install the gas line using trenchless technology. Contractor to coordinate this work with PG&E and will need to protect this line in place when constructing the sewer line. PG&E expected to have relocation completed before December 2010. Once the relocation is completed, PG&E to abandon the 2-inch line crossing over the new Lower Silver Creek Culvert. Contractor to remove gas line to construct new culvert.

14. 155+44+/- SJWC 12-inch Water Pipeline at Capitol Expressway: This is a lead-time item. The Contractor is responsible for planning and implementing the ongoing coordination and accommodating it into the Contractor's Construction Schedule. In general, the construction and coordination is expected to approximate the following:

    - Contractor (through the District) will notify SJWC at least two months prior to start of construction at west side of culvert. Contractor shall contact SJWC throughout as Contractor deems necessary and at least one week before to confirm schedule.

    - SJWC is expected to mobilize and relocate the main to the west side of Capitol Avenue's frontage road and install piping across the existing culvert and abandon the existing pipe under the creek with slurry. SJWC will at this time complete final restoration work up to the sidewalk area. SJWC will not replace the sidewalk or driveways at this time but instead is expected to use H-20 traffic rated plates above shallow temporary piping and set temporary AC patch where needed. SJWC estimates that it will take up to three weeks to construct this work and that night work might be required by SJWC.

    - When Contractor is ready to install precast box culvert, Contractor shall call SJWC at least one week prior to work to notify SJWC of schedule. SJWC will remove the construction plates and steel main across the culverts and with the coordination of Contractor, SJWC will store the steel pipe at a suitable, secured, on-site locations. SJWC will install a temporary AC patch or surface where needed for pedestrian traffic. SJWC is expected to complete this work within one half day. Contractor to confirm actual SJWC Schedule and schedule his work accordingly.

    - Contractor shall have up to 48 hours to install box culvert. If the Contractor cannot install the box culvert within 48 hours, then SJWC must be notified immediately. SJWC will then install a temporary 6-inch jumper line.

    - After installation of the box culvert, SJWC shall re-install the steel piping across the existing and new culvert and will backfill and compact and install a concrete cap over the steel pipe at the proposed driveway location. SJWC will replace all sidewalk and driveways above SJWC piping beyond channel project limits of work.

15. 154+50+/- SJWC Water Service Irrigation Connections on west side of Capitol Expressway (both sides of creek): Contractor shall coordinate installation of irrigation services with SJWC. SJWC shall install two irrigation services on the west side of Capitol Expressway, per Drawings. District shall pay SJWC fees for the installation of the irrigation services.

16. <u>156+62+/- PG&E 4-inch Gas Pipeline at Capitol Expressway:</u> This is a lead-time item. The Contractor is responsible for planning and implementing the ongoing coordination and accommodating it with the Contractor's Construction Schedule. In general, the construction and coordination is expected to approximate the following:

- Within one month of Contract NTP, and at least three months prior to anticipated work at Capitol Expressway, Contractor (through District) will issue a written notice of intent to PG&E contact that work will be done at this location.

- Once this notice is received, the PG&E contact is expected to put the work on their internal schedule. It is the Contractor's responsibility to coordinate with PG&E to confirm that the work is scheduled.

- At least one month prior to construction, Contractor (through District) will communicate with PG&E contact to confirm the scheduled date.

- At least three weeks prior to the construction date scheduled with PG&E, Contactor shall call PG&E Inspector (408) 299-1024 to schedule inspection. Contractor shall site PG&E job number during this call. Once inspection is scheduled, Contractor shall dig bellholes in coordination with PG&E to expose the shut down locations on the PG&E gas line. Bellholes shall meet PG&E requirements for entry. Cover and protect bellholes.

- Once the bellholes are approved by the PG&E Inspector, PG&E is expected to cut and cap the gas line on each side on the date pre-scheduled by Contractor after the bellhole inspection is completed. This gas line can be shut down for up to three months in total. The gas line can only be shut down between March 1 and October 1. Contactor shall remove and dispose of existing sleeve after the line is shut down by PG&E. At this time Contractor shall schedule a date with PG&E for installation of the new gas line. Contractor shall call and send an email update to PG&E Contact to keep contact appraised of progress and construction schedule for installation of new gas line.

- This gas line can be shut down for no more than three months. Contractor shall remove and dispose of existing sleeve once it is shutdown by PG&E.

- Contractor shall perform work at location within this shutdown period. NO EXTENSION SHALL BE GIVEN.

- Once new reinforced box culvert is installed, Contractor is to complete trenching so new gas line can be installed. Contractor to install a 6-

inch steel sleeve for new PG&E gas line across culverts. Contractor to coordinate sleeve location and PG&E tie-in locations with PG&E before sleeve is placed in trench, Contractor shall cut a one foot longitudinal half of the sleeve off of each side.

- Contractor shall call PG&E contact 48 hours before the gas line trench and sleeve are completed and PG&E will arrive to install gas line per pre-scheduled date.

- It is Contractor's responsibility to coordinate with PG&E to ensure the sleeve and trench meet PG&E requirements.

- Once gas line is installed, Contractor shall weld the new sleeve to the existing sleeve and seal the sleeve.

- Contractor shall be responsible for all backfill and paving over gas lines and sleeve.

17. 156+65+/- Joint Utility Pole at Capitol Expressway: PG&E is expected install new joint pole approximately 12-feet south of existing pole, with two guy wires anchored 10-feet south and 10-feet east of the pole. PG&E will move their facilities from existing joint pole to new pole. PG&E will cut the top off of the existing pole and abandon the pole to AT&T. AT&T will remove their facilities from the "tapped" pole and remove and dispose of the pole. Contractor shall install two 4-inch concrete filled steel bollards, one next to each of the new guy wire anchors, to protect anchors from traffic of driveway next to pole. Pole relocation expected to be completed by August 31, 2010.

18. Building Service Modifications at Capitol Expwy., Bid Item No. 1E

a. 157+10+/- PG&E 2-inch Gas Pipeline and services to two customers: This is a lead-time item. The Contractor is responsible for planning and implementing the ongoing coordination and accommodating it in the Contractor's Construction Schedule. In general, the construction and coordination is expected to approximate the following:

- The existing 2-inch gas line at the creek currently serves the San Jose Cambodian Buddhist Society (APN 484-33-71) and Illa (APN 484-33-120). PG&E will install new services on Betten Ct. to each customer.

- PG&E is expected to install the service for the Buddist Society from the end of Betten Court to the corner of the temple closest to Betten Ct.

- PG&E expects to use trenchless methods to minimize the impact to the driveway at this location. PG&E is responsible for all trenching, backfill, paving, and permitting to install these services to the future meter site for these customers.

- Contractor shall reroute the gas lines--along the roof gutter or underground, depending on property owner preference—at each of the properties from the existing meter to the new meter locations. Contractor shall comply with all requirements in PG&E Green Book: http://www.pge.com/mybusiness/customerservice/otherrequests/newconstruction/greenbook/index.

- If routed along the building exterior, Contractor shall paint new pipeline to match existing house color to satisfaction of property owner.

- Contractor shall acquire and pay for all drawings and permits needed from the City of San Jose and meet all City inspection requirements.

- Once pipe has cleared inspection and a meter release has been acquired from the City of San Jose, Contractor shall call PG&E Contact to schedule PG&E to move meter to new connection point and make connection. Contractor shall also send a copy of the meter release directly to the PG&E contact.

- PG&E is expected connect new connection with 2 weeks of contact from Contractor. Contractor shall coordinate closely, as necessary with PG&E Contact to facilitate the schedule.

- Once the services are connected, PG&E will have 2 weeks to abandon the 2-inch gas line along the creek. Contractor shall coordinate closely, as necessary with PG&E Contact to facilitate the schedule.

- Contractor shall remove and dispose of the gas line once it has been abandoned by PG&E.

b. 157+63+/- Joint Utility Pole: PG&E shall remove electrical lines from joint pole and cut the top off the pole before abandoning it to AT&T. AT&T will remove their facilities off pole and remove and dispose of pole once new service on Betten Ct. has been turned on to San Jose Cambodian Buddhist Society (APN 484-3-71) and Illa (APN 484-33-120).

c. 158+00+/- AT&T Pole: AT&T will remove their facilities off of pole and remove and dispose of pole once new service on Betten Ct. has been turned on to San Jose Cambodian Buddhist Society (APN 484-33-71) and Illa (APN 484-33-120).

d. 158+50 and 159+50+/- AT&T Services to San Jose Cambodian Buddhist Society (APN 484-33-71) and Illa (APN 484-33-120): This is a lead-time item. The Contractor is responsible for planning and implementing the ongoing coordination and coordinating it in the Contractor's Construction Schedule. In general, the construction and coordination is expected to approximate the following:

- AT&T will install new services to San Jose Cambodian Buddhist Society (APN 484-33-71) and Illa (APN 484-33-120) by installing approximately 1,000 feet of conduit from Mervyn's Way to Betten Ct.
- AT&T will also install one terminal and a box to the property line of each location. Contractor shall route existing phone connection to each new box.
- Contractor shall route cable along eave of roof where possible, and bury cable underground until connection at new box.
- Contractor shall acquire and pay for all necessary permits and have all inspections as required by the City of San Jose.
- Contractor shall call AT&T contact once service has been connected to new service box.
- Once AT&T contact is called, AT&T will remove poles at 157+63 and 158+00. Contractor to coordinate removal timing the AT&T.

C. Bid Additive 1 (N. Babb Creek to Story Rd.)

The Contractor's attention is directed to Articles 15.02, "Utilities", 15.02.01 "Protection of Existing Utilities", and 15.02.03 "Utility Installation/Relocation", paragraph A.

D. Bid Additive 2 (Story Rd. to Murtha Dr.)

The Contractor's attention is directed to Articles 15.02, "Utilities", 15.02.01 "Protection of Existing Utilities", and 15.02.03 "Utility Installation/Relocation", paragraph A.

1. 182+00+/- CSJ Electric lines for street lights and signals at Story Rd.: Contractor shall protect and support existing CSJ electric line located on

top of existing culvert in sidewalk. In coordination with City, Contractor may remove and replace with City of San Jose approval.

2. 182+15+/- SJWC 12-inch water pipeline at Story Rd.: Contactor (through District) will notify SJWC at least two months prior to construction at this location. Contractor shall contact SJWC throughout as Contractor deems necessary and again at least one week before to confirm schedule. SJWC will then cap the SJWC main at two locations, using anchor blocks. SJWC will reestablish a 3-inch manifold service to the south side to maintain fire flows at this location.

   Contractor has up to three months to complete installation of reinforced box culvert as SJWC main can be shut down for only a maximum of three months. No schedule extensions shall be allowed.

   In coordination with SJWC, Contractor shall then cut and remove the 18-inch casing and 12-inch water main as needed for installation of the culvert.

   At least one month prior to completion of new reinforced box culvert installation, Contractor shall notify SJWC with the schedule. At a minimum, Contractor shall contact SJWC again at least one week before to confirm schedule.

   SJWC will relocate main across existing and newly installed culvert under the north sidewalk. SJWC will backfill and compact, and install concrete cap over the steel pipe at the proposed driveway and restore the final concrete sidewalk and driveways outside the project limits. SJWC will abandon existing pipe and casing in Story Rd. using a slurry fill unless pipe has been removed by Contractor. It is the Contractor's responsibility to coordinate with SJWC throughout the installation/relocation to confirm work schedule and progress.

3. 182+/- SJWC Water Service Irrigation Connections on north side of Story Rd. (both sides of creek): Contractor shall coordinate installation of irrigation services with SJWC. SJWC shall install two irrigation services on the west side of Story Road, per Drawings. District shall pay SJWC fees for the installation of the irrigation services.

4. 182+15+/- AT&T underground telephone lines at Story Rd.: Existing lines currently cross above existing culvert. AT&T will splice slack into lines in 2011. In coordination with AT&T Contractor will excavate around existing conduits and lift them such that the new box culvert can be installed below the lines. Contractor to coordinate all work with AT&T.

5. 182+20+/- PG&E 4-inch gas line crossing Story Rd.: This is a lead-time item. The Contractor is responsible for planning and implementing the ongoing coordination and accommodating in the Contractor's

Construction Schedule. In general, the construction and coordination is expected to approximate the following:

- No shutdown can occur between November-February under any circumstances.

- Within one month of Contract NTP, and at least three months Contractor (through District) will issue a written notice of intent to PG&E contact that work will be done at this location.

- Once this notice is received, the PG&E contact is expected to put the work on their internal schedule. It is the Contractor's responsibility to coordinate with PG&E to confirm that the works is scheduled.

- One month prior to construction, Contractor (through District) will communicate with PG&E contact to confirm that the scheduled date still holds.

- At least three weeks prior to the construction date scheduled with PG&E, Contractor shall call PG&E Inspector (408) 299-1024 to schedule inspection. Contractor shall site PG&E job number during this call. Once inspection is scheduled, Contractor shall dig bellholes in coordination with PG&E to expose the shut down locations on the PG&E gas line. Bellholes shall meet PG&E requirements for entry. Cover and protect bellholes.

- Once the bellholes are approved by the inspector, PG&E is expected to cut and cap the gas line on each side on the date pre-scheduled by Contactor after the bellhole inspection is completed. This gas line can only be shut down between March 1 and October 1. Contractor shall remove and dispose of existing sleeve after the line is shut down by PG&E. At this time Contractor shall schedule a date with PG&E for installation of the new gas line. Contractor shall call and send an email update to PG&E Contact to keep contact appraised of progress and construction schedule for installation of new gas line.

- Contractor shall perform work at locution within this shutdown period. NO EXTENSION SHALL BE GIVEN.

- Once new culvert is installed, Contractor to complete trenching so new gas line can be installed. Contractor shall install a 6-inch steel sleeve for new PG&E gas line across the culvert. Before sleeve is placed in trench, Contractor shall cut a one foot longitudinal half of the sleeve off of each side.

- Contractor shall call PG&E Contact 48 hours before the gas line trench and sleeve are completed so PG&E can approve work before PG&E will arrive to install gas line per pre-scheduled date. Contractor shall coordinate sleeve location and PG&E tie-in locations with PG&E.

- Contractor shall coordinate with PG&E to make sure the sleeve and trench meet PG&E requirements.

- Once gas line is installed, Contractor shall weld the new sleeve to the existing sleeve and seal the sleeve.

- Contractor shall be responsible for all backfill and paving over gas lines sleeve.

6. 182+75+/- CSJ Electric lines for street lights and signals: Contractor shall protect and support existing CSJ electric line located on top of existing culvert in sidewalk or coordinate for temporary overhead if PG&E will allow.

7. 182+75+/- AT&T underground telephone lines at Story Rd.: Existing lines currently cross above existing culvert. AT&T will splice slack into line in 2011. In coordination with AT&T Contractor will excavate around existing conduits and lift them such that the new box culvert can be installed below the lines. Contractor shall coordinate all work with AT&T.

8. 182+75+/- Comcast underground fiber lines at Story Rd.: Existing lines currently cross above existing culvert. Comcast will splice slack into lines in 2011. In coordination with Comcast, Contractor will excavate around existing conduits and lift them such that the new box culvert can be installed below the lines. Contractor shall coordinate all work with Comcast.

9. 182+86+/- PG&E 6-inch, 4-inch, and 6-inch electrical lines at Story Rd.: Existing lines currently cross above existing culvert. PG&E is expected to splice slack into line in 2011 if needed. In coordination with PG&E, Contractor will excavate around existing conduits and lift them such that the new box culvert can be installed below the lines. Contractor to coordinate work with PG&E.

10. 199+/- SJWC Water Service Irrigation Connections on west side of Murtha Drive (both sides of creek): Contractor shall coordinate installation of irrigation services with SJWC. SJWC shall install two irrigation services on the west side of Murtha Drive, per Drawings. District shall pay SJWC feds for the installation of the irrigation services.

E. Bid Additive 3 (Murtha Dr. Centerline to Moss Point Dr.)

1. 206+76+/- PG&E Guy Wire: PG&E will relocate guy wire (coming from joint pole #PG060191) from DISTRICT property and possibly install additional pole(s). Contractor shall coordinate closely, as necessary with PG&E to facilitate the schedule.

2. 211+43+/- PG&E Joint Utility Pole and Guy Wire: PG&E will relocate joint utility pole and guy wire from DISTRICT property to backyard of property owner (Montoya, APN 488-09-051). Contractor shall coordinate closely, as necessary with PG&E to facilitate the schedule.

3. 217+/- SJWC Water Service Irrigation Connections on west side of Moss Point Drive (both sides of creek): Contractor shall coordinate installation of irrigation services with SJWC. SJWC shall install two irrigation services on the west side of Moss Point Drive, per Drawings. District shall pay SJWC fees for the installation of the irrigation services.

15.02.04. Payment

A. Full compensation for furnishing all labor, materials, tools, equipment and incidentals and for doing all work involved in complying with all requirements under Article 15.02.03 Item B17 “Building Service Modifications at Capitol Expwy., Bid Item 1E”, as specified in these Specifications, and as directed by the Engineer, shall be included in the lump sum price bid for BUILDING SERVICE MODIFICATIONS AT CAPITOL EXPWY., Bid Item No. 1E.

B. Accept as noted in 15.02.04 A, above, full compensation for furnishing all labor, materials, tools, equipment and incidentals for doing all work involved in complying with all requirements under Article 15.02. “Utilities”, shall be considered incidental and included in the prices bid for various items of work and no additional payment will be made therefore.

15.03. Protection of Existing Improvements

A. The Contractor’s attention is directed to Article 6.14, “Preservation of Property” of these Specifications.

B. See Section 15.02.03 for utility-specific improvements that will be relocated and will need to be protected.

15.03.01. Survey Monuments

A. No survey permanent monuments, permanent markers for the District right of way, or District survey control points shall be removed or disturbed until the Engineer has recorded the locations thereof, and a permit for such removal has been received from the agency having jurisdiction. When the construction work has been completed, the Contractor shall cause the replacement of said

monuments in the locations as referenced by the Engineer at no cost to the District. Said replaced monuments shall be place under the direction of a Licensed Land Surveyor or Civil Engineer authorized to practice Land Surveying in California in accordance with Section 8771 of the California Business and Profession Code.

B. Installation of the survey permanent monuments shall be in accordance with initial monument installation as shown on the City of San Jose's Standard Plan Details for Public Works Construction, pages R-16, R-17, and R-18, and the City of San Jose's Standard Specifications for Public Works Construction, Section 81.

C. If any permanent marker or permanent monument is destroyed by the Contractor and said marker or monument has not been referenced by the Engineer, the Contractor shall be responsible for the accurate replacement of said marker or monument at no expense to the District under the direction of a Land Surveyor or Civil Engineer licensed by the State of California in accordance with the California Business and Professions Code Section 8771. Said Land Surveyor shall file a Corner Record per Section 8773 of the California Business and Professions Code.

15.04. Site Review and Monitoring of Project Limits and Vicinity, Bid Item Nos. 1C, 57B, 83B, 120B

15.04.01. General

The Contractor is advised that there are residential and commercial properties and improvements in the immediate vicinity of the work. The Contractor is responsible to monitor and protect those properties from damage. Any damage to the adjacent properties, real and personal, shall be addressed in accordance with Article 6.14, "Preservation of Property" of these Specifications.

A. Site Review and Monitoring of Project Limits and Vicinity work shall consist of furnishing all labor, tools, equipment and incidentals to perform a thorough, documented examination of the work area within the project limits and on properties, both real and personal, adjacent to the project limits, before, during and after construction, including the following: photographic and video documentation; Existing Structures and Features Evaluation Report; crack monitoring, Structures/Features Movement Monitoring Surveys, Ground Movement Monitoring Surveys of existing property, facilities, buildings, and other improvements which could be damaged by the operations of the Contractor.

B. The Contractor shall take all necessary precautions during its operations to limit ground movement from heavy equipment operations, pile hole drilling, structure installation, retaining and flood wall installation, or other operations so that they do not become a public nuisance or result in property damage.

C. Contractor's compliance with this Section does not relieve the Contractor of full responsibility for damage caused by the Contractor's operations.

D. This work shall consist of crack monitoring, Structures/Features movement and ground movement monitoring as a means of identifying the need to take precautionary measures due to excessive ground movement from construction activities (potentially significant impact work) at the location shown in Table 15.1 "Structures/Feature Movement, Crack, and Vibration Monitoring Minimum Monitoring Locations," of these Specifications. The minimum number of monitoring locations for the Base Bid and Bid Additive Items, with possible multiple monitoring devices at some, or all of the locations are shown in Table 15-1.

E. In addition, this work shall include establishing the control for and installing the measurement marker for the Structures/Feature Movement Monitoring Surveys and the Temporary Survey Monitoring Monuments (TSMM) for the Ground Movement Monitoring Surveys, performing the periodic field survey measurements of the markers and TSMM's, and submittal of the documentation and results of each set of periodic markers and TSMM measurements and all other periodic observations and measurement to the Engineer within 1 working day of performing the field measurements.

F. At minimum, for the locations listed in Table 15.1, crack and building/facility monitoring and recording shall be performed within 200 feet of the said locations during the course of potentially significant impact work as determined by the Engineer. At a minimum, all structural removal, shoring installation, demolition work, RCB placement, Cast-in-Drilled-Hole pile construction, and pile placement, wall lagging installation and related activities shall be considered as potentially significant impact work and shall be monitored as provided herein.

G. Prior to the commencement of the photographic and video documentation, crack evaluation, building/feature movement surveys or ground movement monitoring survey work, Contractor shall examine the condition of all areas which may experience impacts as a result of construction activities, including but not limited to, existing improvements, levees, ramps, buildings, landscape planting, hardscape improvements, swimming pools, architectural finishes, the size of structural cracking or settlement, the rate of leakage, and any other conditions deemed appropriate. Contractor shall make a determination, in coordination with the Engineer, as to the photograph/video locations and objects/features to be photographed, crack monitoring locations, Structures/Features movement marker placement, TSMM placement and other necessary observation locations, in addition to the minimum required locations for these items included in this Article. The presence of the Engineer shall in no way relieve the Contractor of the responsibility of determining the means, methods and locations for completely and accurately documenting all existing and future conditions.

H. Prior to performing any monitoring related work described in this Section, including any baseline measurements, and during significant impact work, the Contractor shall submit to the Engineer a written plan (Contractor's Monitoring Plan) detailing the procedures for documentation and monitoring. Such details shall include:

- The name of the firm providing the photographic and video documentation.

- The name of the firm providing the crack monitoring services.
- The name of the firm providing the ground movement and building/features movement surveys.
- Description of the instrumentation and equipment to be used.
- Pre-construction site review and documentation methods and proposed data to be gathered and documented.
- Methods for placing instrumentation, sensors, gauges, and monuments to measure the building, features and ground movement.
- Data collection analysis procedure.
- Number of crack monitoring sensors to be utilized at each of the locations specified in Table 15.1, their proposed placement and identification of which monitors will be located inside the structure, if any and which will be external to the structure.
- Contractor's Engineer's recommended maximum allowable crack formation and other measurements for each location in Table 15.1, based on structural facility specifics.
- Contractor's Engineer's recommended maximum allowable structure/feature movement.
- Contractor's Engineer's recommended horizontal and vertical ground movement tolerances and recommended measuring equipment.
- Means and methods of identifying and providing warning when measurements exceed specified maximum limits.
- Name of the responsible person designated by the Contractor.
- A contingency plan for alternative construction methods, structure/feature protection and other remedial actions if measurements exceed the specified limits.

I. The District will retain an amount equal to 25 percent of the estimated value of the work performed during the estimate period in which the Contractor fails to submit the monitoring reports conforming to the requirements of this section, as determined by the Engineer.

J. The Contractor's monitoring and surveying personnel which include those persons, firms, or entities providing crack monitoring, ground movement monitoring survey and building/feature movement monitoring, recording, documentation, and the

production of the reports shall have the qualifications specified herein. Said personnel may be on the staff of the Contractor. However, they shall not be employed nor compensated by subcontractors, or by persons or entities hired by subcontractors, who will provide other services or material for the Project.

K. The Contractor's monitoring personnel shall be subject to the review of the Engineer.

L. The Contractor shall employ a licensed Civil or Structural Engineer (Contractor's Engineer) Registered in the State of California to conduct the Existing Improvement and Structures Evaluation and to prepare reports documenting the evaluation results.

M. The Contractor's Engineer shall be on site and supervise the placement of crack monitoring devices and sturctures/feature movement markers and shall be in responsible charge of all monitoring and reporting.

N. The Contractor shall obtain written permission (or refusal) from each property owner prior to entering the property for the purpose of performing the work specified in this section. The Contractor shall provide to the Engineer a copy of all such permissions or refusals by property owners, prior to start of monitoring work on each property.

O. Records of all observations shall be prepared by the Contractor, and every copy of all documents shall be signed by the authorized representative of the Contractor, and provided to the Engineer. Photographs, video tapes and digital files with dates, as deemed appropriate by the Engineer, shall be made by the Contractor and be included in the record of observations. One signed copy of every document, photographs, video tape and digital file will be kept on file in the office of the Engineer.

P. All records of pre-construction site review and observations (such as documents, notes, photographs, video tapes, and digital files) shall be submitted to the Engineer prior to the start of any work.

Q. All records, photographs, video tapes, field notes and digital files developed per this Article are intended for use as evidence in ascertaining the extent of any damage which may occur as a result of the Contractor's operations during the prosecution of the Contract work.

15.04.02. Equipment

A. The Contractor shall submit a list of digital photo equipment proposed for use, including digital cameras, photography software, photo printers and photo quality glossy heavyweight paper. The submittal shall include actual recent samples of digital photos taken with the proposed camera and printed with the proposed printer. The photos shall be printed to the highest quality on the required photo quality glossy heavyweight paper.

B. The digital camera shall be color and shall have a minimum resolution of 1280 x 960 pixels or defined as "megapixel." Digital photo prints shall be on either dye

sublimation printer capable of color fusion and continues tone, a color laser printer capable of printing 1200x1200 dots per inch (dpi), or a professional graphics color inkjet printer capable of printing 1440x72 dpi and using six separate color reservoirs. All digital prints shall utilize photo quality glossy heavy weight paper (as defined by the printer manufacturer and as approved by the Engineer). All digital prints shall be printed at the highest print mode and print quality available to the approved printer (photo mode or best print quality). The digital prints shall also include the path name (folder and sub folder names) and file name of the picture's location on the photo CD-ROM. All digital photos saved on CD-ROM shall be saved in the JPEG file format. The image quality option of the JPEG file shall be set to high. The JPEG files should be stored in separate folders based on photo location. The CD-ROM shall be submitted to the Engineer as part of the photo survey submittal.

C. The photograph prints shall be in color, and have a printed image size of at least 5" x 7". All prints shall be on glossy photographic paper. Proof sheets, thumbnail prints, or contact prints are not acceptable. All negatives shall be provided in protective sleeves. The negatives shall be indexed to facilitate expeditious reproduction. All photos shall be identified by date, location, orientation, and labeled with detailed description. All photos shall be submitted in a 3-ring binder and shall include the following: protective photo sleeves, building layout (including layout of each floor as necessary), and a summary sheet indexing all photos.

D. The Contractor shall include a letter of authenticity certifying that every digital photo image in the photo survey submittal has not been modified using photographic software. Said letter shall be included with every photo survey submittal.

15.04.03. Pre-Construction Site Review and Documentation

A. General

All Pre-Construction Site Review and Documentation of the Project Limits and Vicinity (Documentation) shall be performed after the Contract has been awarded and the Contractor's Monitoring Plan has been submitted. Documentation shall occur no later than 30 days prior to the commencement of any of the following: excavation activity; demolition activity; pile activity; shoring installation; heavy equipment operations; or other significant impact work that occurs within 200 feet of existing facilities or adjacent properties (real or personal) and has a potential to cause earth movement and/or damage to the property, structures or facilities. Examination of the work areas within the project limits and of the adjacent properties shall be conducted in the presence of the Engineer. The presence of the Engineer shall in no way relieve the Contractor of the responsibility for determining the means, methods and locations for completely and accurately documenting all existing conditions.

Documentation shall follow the Contractor's Monitoring Plan. The work to be produced includes records of observations (written and oral), videotapes, and photographs.

B. Photographic/Video Documentation

The Contractor shall notify the Engineer 48 hours prior to beginning the photo and elevation survey and crack monitoring work.

The scope of the examination for photo documentation shall consist of photographic, video and audio recording of the conditions of each property adjacent to the project site. The Documentation may be performed from the project property and public rights-of-way. It is the Contractor's responsibility to assure that the general condition of each adjacent property and any improvements thereon can be determined from the Documentation performed.

The photo documentation shall show the general condition of the property and all visible improvements. Obvious deficiencies in the property or facility such as cracks, settlement, leakage, distress and the like shall be recorded in the photos.

The video recording shall show the external conditions of property improvements, including, but not limited to, any and all visible deficiencies in the facility such as cracks, settlement, leakage, distress and the like. The video tape recording shall be narrated contemporaneously by the camera operator, documenting the location, orientation, time and date of the scene. The narration may be supplemented by onscreen text either generated by the camera or by other methods approved by the Engineer. All video tape or electronic recording shall be made to the highest quality and standards. No more than one facility shall be recorded on single videotape or track. The Contractor shall submit the original, unedited video recording to the Engineer. Copies of the video shall be professionally made and shall not incur signal degradation during copying.

A written report of the record of observations shall also be submitted with the videotape. The written report shall include the date and time of the recording and the location of the facility in question. The report shall also include a table listing the anomalies with a detailed description, and orientation. The table shall also list the beginning and the ending times of the videocassette counter for each anomaly recorded on the videotape.

C. Existing Structures/Features Evaluation and Monitoring

The Existing Structure/Features Evaluation and Monitoring is a detailed evaluation of the locations listed in Table 15.1. The Contractor's Engineer shall perform and submit to the Engineer a signed and stamped copy of the pre-construction Existing Structures/Features Evaluation report 30 days prior to the commencement of any potentially significant impact work, including: demolition activity; excavation and embankment activity; pile related activity; shoring installation; structure construction; heavy equipment operations; or other significant impact work that occurs within 200

feet of existing facilities or adjacent properties (real or personal) and has a potential to cause damage to property, real or personal, structures or facilities.

The Contractor shall notify the Engineer 48 hours prior to beginning the photo and elevation survey and crack monitoring work.

The Existing Structures/Features Evaluation report shall include identification of the properties chosen to be included as the locations that were to be determined by the Contractor in Table 15-1. The Contractor's Engineer, in consultation with the Contractor and the Engineer shall determine which structures, if any, require interior documentation and monitoring. Photos of the grounds and improvements of each of the Existing Structure/Features Evaluation location shall be included in the report. The photo documentation shall show the condition of the property and all improvements, including, but not limited to, any and all deficiencies in the facility such as cracks, settlement, leakage, distress and the like. The photo survey shall document the condition of the foundation walls, floor, ceiling, roof, improvements and other building elements on the interiors and/or exteriors of the said facilities, as directed by the Contractor's Monitoring Plan.

The Evaluation shall also include a detailed video recording and shall show the condition of the each facility exterior and interior, if directed by the Contractor's Engineer, including, but not limited to, any and all deficiencies in the facility such as cracks, settlement, leakage, distress and the like. The video tape recording shall be narrated contemporaneously by the camera operator, documenting the location, orientation, time and date of the scene. The narration may be supplemented by onscreen text either generated by the camera or by other methods approved by the Engineer. All video tape or electronic recording shall be made to the highest quality and standards. No more than one facility shall be recorded on single video tape or track. The Contractor shall submit the original, unedited video recording to the engineer. Copies of the video shall be professionally made and shall not incur signal degradation during copying.

A written report of the record of observations shall also be submitted with the videotape. The written report shall include the date and time of the recording and the location of the facility in question. The report shall also include a table listing the anomalies with a detailed description, and orientation. The table shall also list the beginning and the ending times of the videocassette counter for each anomaly recorded on the videotape.

The Contractor shall submit signed and stamped evaluation reports to the Engineer with photographs, including videotaping with verbal description, of the existing condition for each property being evaluated. All photographs submitted in the inspection reports shall be mounted on 8 ½″ X 11″ sheets. The Contractor shall notify each property owner and gain permission to enter their property and perform the necessary work, per the requirements of the Contractor's Monitoring Plan. All submittals shall be in accordance with Article 9.02, Submittals to be Furnished by the Contractor" of the Standard Provisions.

Contractor shall monitor at the locations shown in Table 15.1. Some locations will require multiple monitoring devices. At a minimum, crack monitoring shall be conducted at the facilities listed in the table below, entitled "Table 15.1 Building/Feature Movement, Crack, and Vibration Monitoring Minimum Monitoring Locations".

Structures/Features Movement Surveys Cracks shall be monitored weekly during the pre-construction photo survey and daily throughout the duration of any work that has a potential to cause damage to the existing facilities. The crack gauge measurements shall be recorded at the same time each day in an effort to eliminate deviations in crack magnitude due to heat fluctuations. A report detailing such readings shall be provided to the Engineer on a weekly basis. When any crack enlargement exceeds the allowable limits, per the Contractor's Monitoring Plan, the Engineer shall be notified immediately, and the Contractor shall implement the contingency plan set forth in the Contractor's Monitoring Plan.

D. Structures/Features Movement Surveys

For the locations in Table 15.1, including the locations designated by the Contractor's Engineer, structure/feature elevation surveys shall be conducted to obtain vertical elevations of existing buildings, foundations and other improvements as directed by the Contractor's Engineer in consultation with the Engineer. A minimum of three points shall be monitored at each facility. Elevation measuring equipment shall be of a type required by the Contractor's Engineer in consultation with the Contractor and the Engineer. Such equipment shall be capable of measuring changes in elevations to the tolerances specified by the Contractor's Engineer.

Three calendar days prior to beginning any impact work, the Contractor shall document elevations of the required points per facility and shall continue to document each point on a daily basis until the significant impact work begins. During the significant impact work, the Contractor shall document the elevations of the points three times per shift. After the impact work is complete for the specified location, the Contractor shall document the elevations on a daily basis for two days. If there is variation in elevation of a 0.125 inch or more, the impact work shall be halted, and the Engineer shall be immediately notified. If the work is halted due to fluctuations in elevation the Contractor shall modify their operations to eliminate further fluctuations in elevations, at no cost to the District.

TABLE 15-1
BUILDING/FEATURE MOVEMENT, CRACK, AND VIBRATION MONITORING
MINIMUM MONITORING LOCATONS

STATION	OFFSET	# of LOCATIONS	APN	DESCRIPTION
BASE BID 128+00	RT & LT	2		680 overcrossing
130+20	LT	1	481-33-127	Jackson / Garage - Cardenas
131+30	LT	1	484-39-05	Jackson / House – Sierra
131+30	RT	1	484-38-43	Jackson – Lopez
142+70	LT	1	484-39-04	PG&E Tower
154+60	LT	1	484-36-61	Capitol – Rodriguez
154+60	RT	1	484-38-01	Capitol – Lujan
157+20	LT	1	484-29-20	Capitol / Pool – Zeledon
158+90	RT	1	484-33-71	Garage – SJCBS
161+30	LT	1		Pool
162+50	RT	1	484-47-55	House – LE
162+90	RT	1	484-47-54	House – Hernandez
166+60	RT	1	484-47-47	House – Magahiz
167+00	RT	1	484-47-46	House – Singh
168+80	RT	1	484-47-42	House – Camagon
170+00	RT	1	484-47-41	Garage – Sayasane
170+50	RT	1	484-47-40	Pool / Saed
Varies	TBD	4	TBD by Contractor w/ Engineer's Approval	
TOTAL # of LOCATIONS - BASE BID: (individual location may require multiple devices)		**22**		
BID ADDITIVE 1 (BA1) 171+50	LT	1	484-32-115	Lyndale Bridge
172+00	LT	1	484-32-116	Lyndale Bridge – Lemus
172+00	RT	1	484-47-039	Lyndale Bridge - Quinones
176+00 – 182+00	RT	1	484-33-114	Home Depot
Varies	TBD	3	TBD by Contractor w/ Engineer's Approval	
TOTAL # of LOCATIONS - BA1: (individual location may require multiple devices)		**7**		
BID ADDITIVE 2 (BA2) 182+00	LT	1	484-32-133	Story – Sunzeri
183+00	LT	1	488-03-001	Apartments – SJ Courtyard Plaza
183+00	RT	1	488-02-013	Commercial Building – Ho
187+00	LT	1	488-03-002	Apartments – SJ Courtyard Plaza
199+00	LT	1	488-04-140	Murtha – Amaya
199+00	RT	1	488-05-003	Murtha – Ramos
Varies	TBD	3	TBD by Contractor w/ Engineer's Approval	
TOTAL # of LOCATIONS - BA2: (individual location may require multiple devices)		**9**		

TABLE 15-1 BUILDING/FEATURE MOVEMENT, CRACK, AND VIBRATION MONITORING MINIMUM MONITORING LOCATONS				
STATION	**OFFSET**	**# of LOCATIONS**	**APN**	**DESCRIPTION**
BID ADDITIVE 3 (BA3) 199+70	LT	1	488-09-031	Murtha – Avalos
199+70	RT	1	488-09-030	Murtha – Quiros
206+00	LT	1	488-09-041	Pool – Williams
217+00	LT	1	488-13-008	Moss – Gallegos
217+00	RT	1	488-09-001	Moss – Tingler
Varies	TBD	2	TBD by Contractor w/ Engineer's Approval	
TOTAL # of LOCATIONS - BA3: (individual location may require multiple devices)		**7**		

E. Ground Movement Monitoring Surveys

a. The placement of Temporary Survey Monitoring Monuments (TSMM) and all field measurements for monitoring and elevation surveys shall be performed under the direction of the Licensed Land Surveyor or Civil Engineer required in Article 14.04 "Construction Survey" of these Specifications. Horizontal and Vertical monitoring measurements shall be to the tolerances required by the Contractor's Engineer in consultation with the Contractor and the Engineer. Survey equipment and methods shall be capable of measuring changes in elevations to the tolerances specified by the Contractor's Engineer.

b. Temporary Survey Monitoring Monument (TSMM) pipes, set for monitoring shall be ¾" diameter iron pipe, and 30" long with a plastic survey monument marker. The pipe shall be driven into the ground a sufficient distance to hold position through the duration of construction.

c. The installation of the TSMM and initial documentation, including horizontal and vertical measurements of each TSMM, shall be performed and submitted to the Engineer at least 30 days prior to the commencement of any of the potentially significant impact work such as: excavation activity; demolition activity; pile activity; shoring installation; flood or retaining wall construction, structure installation, heavy equipment operations; or other significant impact work that occurs within 200 feet of existing facilities or adjacent properties (real or personal) and has a potential to cause damage to the property, structures or facilities. The minimum periodic survey and monitoring of the TSMM throughout the construction shall be performed as follows:

- **Monthly:** All TSMM's set within the broader project construction area shall be surveyed at least monthly, or more often at the direction of the Engineer for the horizontal and vertical measurements of each TSMM to the tolerances set forth in the Contractor's Monitoring Plan. Documentation as to the visual

condition of each TSMM shall be made, and the survey field notes for TSMM measurement along with other notes, sketches or pictures as to TSMM condition or other pertinent information shall be submitted to the Engineer within 2 working days of the performance of the field survey.

- **Weekly**: All TSMM's that fall within the proximity of the current construction activity, but at a distance greater than 200 feet, shall be surveyed at least weekly, or more often, at the direction of the Engineer, for the horizontal and vertical measurements of each TSMM to the tolerances set forth in the Contractor's Monitoring Plan. Documentation as to the visual condition of each TSMM shall be made, and the survey field notes for TSMM measurement along with other notes, sketches or pictures as to TSMM condition or other pertinent information shall be submitted to the Engineer within 2 working days of the performance of the field survey.

- **Daily or More Often**: All TSMM that fall within 200 of feet any currently active construction area(s) shall be surveyed as often as deemed necessary by the Contractor and as directed by the Engineer, based on the potential impact, but in no case less than on a daily basis. The work shall include the survey for the horizontal and vertical measurements of each TSMM within the affected area to the tolerances set forth in the Contractor's Monitoring Plan. Documentation as to the visual condition of each TSMM shall be made, and the survey field notes for TSMM measurement along with other notes, sketches or pictures as to TSMM condition or other pertinent information shall be submitted to the Engineer within 1 working day of the performance of the field survey.

d. The Contractor shall install the TSMM's at the approximate locations shown in Table 15-2 "Temporary Survey Monitoring Monument Placement". The Contractor, in coordination with the Engineer, will determine the exact location of all TSMM's in the field.

e. When any survey measurements denote movement of a TSMM in excess of the tolerance set forth in the Contractor's Monitoring Plan, the Engineer shall be notified immediately, and the Contractor shall implement the contingency plan set forth in the Contractor's Monitoring Plan.

TABLE 15-2
TEMPORARY SURVEY MONITORING MONUMENT (TSMM) PLACEMENT
MINIMUM TSMM LOCATIONS

TSMM COUNT	APPROX. STATION		# OF LOCATIONS	DESCRIPTION
BASE BID				
1	128+00	RT	1	At Interstate 680
1	130+20	LT	1	Jackson - downstream
2	131+30	RT & LT	2	Jackson - upstream
2	135+00	RT & LT	2	Intermediate Location

TABLE 15-2 TEMPORARY SURVEY MONITORING MONUMENT (TSMM) PLACEMENT MINIMUM TSMM LOCATIONS				
TSMM COUNT	APPROX. STATION		# OF LOCATIONS	DESCRIPTION
2	138+00	RT & LT	2	Intermediate Location
2	141+00	RT & LT	2	Intermediate Location
1	142+70	LT	1	PG&E Tower
1	144+00	RT	1	Intermediate Location
2	147+00	RT & LT	2	Intermediate Location
2	150+00	RT & LT	2	Intermediate Location
2	153+00	RT & LT	2	Intermediate Location
2	154+60	RT & LT	2	Capitol Expressway - downstream
1	157+20	LT	1	Capitol Expressway - upstream
1	158+00	RT	1	Capitol Expressway - upstream
2	160+00	RT & LT	2	Intermediate Location
2	163+00	RT & LT	2	Intermediate Location
2	166+00	RT & LT	2	Intermediate Location
2	169+00	RT & LT	2	Intermediate Location
2	171+00	RT & LT	2	At N. Babb
TOTAL BASE BID:			**32**	
BID ADDITIVE 1 (BA1)				
2	172+00	RT & LT	2	At Lyndale Br.
2	175+00	RT & LT	2	Intermediate Location
2	178+00	RT & LT	2	Intermediate Location
TOTAL BID ADDITIVE 1:			**6**	
BID ADDITIVE 2 (BA2)				
2	181+00	RT & LT	2	Intermediate Location
1	182+00	LT	1	Residence/Story Rd. – downstream APN 484-32-133
1	182+90	LT	1	Apartment Bldg. APN 488-03-001
1	183+30	RT	1	Commercial Bldg. APN 488-02-013
1	184+40	RT	1	Commercial Bldg. APN 488-03-013
1	185+10	LT	1	Apartment Bldg. APN 488-03-001
1	186+00	LT	1	Apartment Bldg. APN 488-03-002
1	187+00	RT	1	Intermediate Location
1	188+30	LT	1	Apartment Bldg. APN 488-03-002
2	190+00	RT & LT	2	Intermediate Location
2	193+00	RT & LT	2	Intermediate Location
2	196+00	RT & LT	2	Intermediate Location
2	199+00	RT & LT	2	Murtha Dr. – downstream
TOTAL BID ADDITIVE 2:			**18**	
BID ADDITIVE 3 (BA3)				
2	199+70	RT & LT	2	Murtha Dr. – upstream
2	202+00	RT & LT	2	At So. Babb Cr.
1	202+70	LT	1	At So. Babb Cr.

TABLE 15-2 TEMPORARY SURVEY MONITORING MONUMENT (TSMM) PLACEMENT MINIMUM TSMM LOCATIONS				
TSMM COUNT	APPROX. STATION		# OF LOCATIONS	DESCRIPTION
2	205+00	RT & LT	2	Intermediate Location
2	208+00	RT & LT	2	Intermediate Location
2	211+00	RT & LT	2	Intermediate Location
2	214+00	RT & LT	2	Intermediate Location
2	216+80	RT & LT	2	Moss Point Dr. - downstream
TOTAL BID ADDITIVE 3:			**15**	

15.04.04. Post-Construction Site Review and Documentation

Post-construction work shall consist of the visual survey work necessary to document the condition of the grounds and improvements of each of the residential or commercial properties included in the pre-construction survey, after the construction has been completed. The Contractor shall submit evaluation reports to the Engineer with photographs, including videotaping with verbal description, of the existing condition for each property being inspected. All photographs submitted in the inspection reports shall be mounted on 8 ½″ X 11″ sheets. The Contractor shall notify each property owner by phone or mail at least 48 hours in advance of his visit to perform these site reviews. All submittals shall be in accordance with Article 9.02, Submittals to be Furnished by the Contractor" of the Standard Provisions.

A post-construction site review and monitoring shall be performed on the same facilities within 10 days after the completion of excavation, demolition activity, pile activity, shoring installation, or other significant impact work that has a potential to cause damage to existing facilities and a copy of the post-construction Existing Improvement and Structures Evaluation reports shall be submitted within one month of the substantial completion of the Contract work impacting the improvement/structure.

Within 20 working days after the completion of any impact work, the Contractor shall submit to the Engineer a report documenting the results of the ground monitoring surveys and the Structure/Facility Monitoring. Each structure/facility monitored shall have a separate report. The report shall be signed by the Professional Land Surveyor in the State of California who performed the survey or in whose authority the survey was made. The report shall include the location of the monitoring points, including the address of the facility surveyed and the building layout. A general layout plan shall be included in the report showing the elevations, dimensions and distances of the monitoring locations.

The photographs, videotapes, and reports of all observations shall be prepared in triplicate by the Contractor and the authorized representatives of the District and of the Contractor shall sign every document.

The pre-construction survey records and the documentation specified above shall be submitted to the Engineer prior to commencement of any significant impact work as defined above. The Engineer shall have five working days to review the submittal for adequacy. No work shall take place unless the Engineer approves the pre-construction survey records.

The package of the post-construction survey documents shall be submitted 10 working days after the impact work has been completed adjacent to each of the specified facilities.

The photo survey package may be submitted in portions based on stages of the construction operations, if in the opinion of the Engineer, detrimental actions can be avoided in the subsequent stages. The submittal package shall include all records, documents, photos, videotapes, and observations. The Engineer shall have five working days to review the submittal for adequacy.

Records in triplicate of all observations shall be prepared by the Contractor and every document shall be signed by the authorized representatives of the State and of the Contractor. Video tapes and photographs, as deemed advisable by the Engineer will be made by the Contractor and signed in the manner specified above. One signed copy of every document and photograph will be kept on file by the Engineer.

The above referenced records, video tapes, and photographs are intended for use as indisputable evidence in ascertaining the extent of any damage which may occur as a result of the Contractor's operations. The above-referenced records, video tapes, and photographs are for the protection of the adjacent property owners, the Contractor, and the State. These records will be used to determine any damage from the Contractor's operations during the work.

Attention is directed to Sections 7.1.1. "Preservation of Property," and 7.1.12, "Responsibility Damage," of the Standard Specifications. The Contractor will immediately inform the Engineer in writing, of any damage to these other facilities.

15.04.05. Payment

Full compensation for furnishing all labor, materials, tools, equipment and incidentals and for doing all work involved in complying with all requirements under Article 15.04 "Site Review and Monitoring of Project Limits and Vicinity" as specified in these Specifications, and as directed by the Engineer, shall be included in the lump sum price bid for SITE REVIEW AND MONITORING OF PROJECT LIMITS AND VICINITY, Bid Item No. 1C, and Bid Additive Item Nos. 57B, 83B, and 120B if/when included in the awarded project by the District.

The Engineer may order photographic surveys, video surveys, crack monitoring, building/facility movement monitoring, and/or ground movement monitoring surveys of existing facilities other than those facilities listed under this Article of these Specifications. Photo surveys, elevation surveys and crack monitoring of existing facilities other than those facilities listed in Article 15.04 "Site Review and Documentation

of Project Limits and Vicinity" of these Specifications will be paid for as provided in Article 5.03 "Change of Work" of these Specifications.

If the Contractor elects to perform additional photographic surveys, video surveys, crack monitoring, building/facility movement monitoring, and/or ground movement monitoring surveys of existing facilities other than those facilities listed in this Article of these Specifications, without prior approval from the Engineer said work shall be at Contractor's own expense and at no additional costs to the District.

15.05. Rights of Way

A. Work will be located in public streets and rights of way in the City of San Jose, the County of Santa Clara, Caltrans, and in District-furnished rights of way. In the performance of the work within the City of San Jose, the County of Santa Clara, or Caltrans jurisdiction, the Contractor shall comply with the ordinances, regulations, and all other requirements of the authorities governing work in public streets and rights of way.

The District is in the process of working with adjacent property owners for removal of private encroachments into the District right-of-way. If such encroachments have not been removed at the time of construction, Contractor shall cooperate to work around said encroachment, at the direction of the Engineer, until such time as the encroachment is removed.

B. The District is in the process of obtaining encroachment and related permits as required by the ordinance and regulations of the City of San Jose, and County of Santa Clara and for Caltrans. Contractor must comply with all conditions as stated in the permits. It is the Contractor's responsibility to coordinate with the jurisdictions to obtain the final construction encroachment permits, including payment of fees, if any, at no additional cost to the District.

15.05.01. District-Furnished Right of Way

A. The District has provided all rights of way in the creek channel, as shown on the Drawings. The Contractor has full use of this right of way except for the limitations specified in these Specifications and as noted on the Drawings.

15.05.02. Contractor-Furnished Right of Way

A. Any additional rights of way desired by the Contractor for his/her convenience shall be acquired by the Contractor at no expense or obligation to the District. The Contractor shall provide the Engineer with copies of any agreements between the Contractor and property owners regarding disposal of excess materials generated by the Contractor's activities, storage of materials, or any use of property in conjunction with this Project. The agreement shall state that the agreement is solely between the Contractor and the property owner and that the District is not a party to the agreement and not responsible for compliance with any conditions stated in the agreement.

15.05.03. Temporary Construction Easement (TCE's)

A. The District has obtained temporary construction easement agreements with the respective property owners, listed in the following table, along the limits of work for use during construction of this Project. The Contractor shall be fully aware of the conditions stipulated in the agreements that may govern his/her operation in these temporary construction easements and shall conduct construction operation accordingly.

Owner	APN	Location/Description
Caltrans	N/A	30-foot wide corridor adjacent to SCVWD right of way along South bank of creek between I-680 and Jackson Ave. See Sheet R-1 of the Contract Drawings. Note: Access to this TCE will not be available until May 1, 2011.

B. Access to the temporary construction easement areas will only be permitted from the existing District rights of way or public streets. Entry to or egress from the temporary construction easement areas outside the existing District rights of way, or public streets will only be allowable if the Contractor makes appropriate arrangements with affected property owners.

C. The Contractor shall notify the Engineer with an advance written notice at least 5 working days before any entry on the property.

D. When use of the temporary construction easement is no longer required, the Contractor shall clean all debris and leave the property in a neat, clean, and presentable condition, and notify the owner that the work is complete.

E. Full compensation for conforming to the requirements of this Article and to the conditions stipulated in the temporary construction easement agreement between the District and the property owners shall be considered as included in the various contract in terms of work and no additional compensation will be allowed therefore.

15.06. Access to Properties Owned by Others

A. The Contractor shall conduct the construction operations in a manner that will cause as little inconvenience as possible to adjacent property owners.

B. Convenient access to driveways, houses, buildings, and businesses along the work shall be maintained in operational condition and temporary approaches to crossings or intersecting streets shall be provided and kept in good condition.

C. When construction operation is directly within the driveway area, provide temporary access. The existing access shall not be closed until the temporary

replacement access is usable. Once construction is completed, restore access to a condition equal to or better than the existing condition prior to the Contractor's operation.

D. Per California Vehicle Code Section 22500, stopping, parking, or leaving standing any vehicle in front of public or private driveway is not allowed.

15.07. Access to Job Site

A. The project location is shown on a map included in the Drawings. The Contractor may use the existing roads to access and perform the work subject to the restrictions specified herein.

B. It shall be the Contractor's responsibility to obtain any and all permits that may be required from the State, City, or County to move materials and equipment to the jobsite, dispose of excess material created by the Contractor's operation and for traffic control to, from, and on the project sites. Attention is directed to Section 6.13 "Interference with Fire Hydrants, Highways and Fences" and Section 6.34 "Regulated Material Management" of these Specifications.

C. As of the time of advertisement of this project, the District is in the process of acquiring right of way for new maintenance road access ramps at the following properties:

- 13785 Story Road – APN 484-32-133. Located on the east side of the creek on the north side of Story Road at Station 181+00 to 182+00. See proposed right of way on Sheet R-6.

- Home Depot at Story Road - Located on the west side of the creek on the north side of Story Road at Station 181+00 to 182+00. See proposed right of way on Sheet R-6.

- 2885 Murtha Drive – APN 488-04-140. Located on the east side of the creek on the north side of Murtha Drive at Station 198+50. See proposed right of way on Sheet R-7.

- 1307 Farringdon Drive – APN 488-09-031. Located on the east side of the creek on the south side of Murtha Drive at Station 200+00. See proposed right of way on Sheet R-7.

Access to the Home Depot property will not be allowed until December 1, 2010. Access to all other areas described above will not be allowed until May 1, 2011.

15.08. Access Roads Within Job Site

A. The Contractor shall maintain access road to all staging, office trailer, and storage areas and other areas to which frequent access is required. Maintain access to all other existing facilities on the site, including access for delivery of materials and for maintenance and operation.

B. Where temporary roads cross buried utilities that might be injured by the loads likely to be imposed, such utilities shall be adequately protected so that no loads shall discharge on such buried utilities, per the requirements of the agency or company that owns said utility.

C. Maintain on-site access roads free of mud. Under no circumstance shall vehicles leaving the site track mud or dirt off the site onto public right-of-way.

D. Contractor shall not use the 5' access area at the top bank, adjacent to the private properties, for construction access, storage, parking or any other use.

15.09. District Use of Facilities/Premises Within the Work Area

A. The District reserves the right to access and use all facilities to perform required maintenance of infrastructure and facilities. All service roads, gates, etc. shall be fully accessible to District Staff without precondition.

B. The Contractor shall coordinate all construction operations with the District to avoid conflict and to facilitate District's usage of the premises.

C. The Contractor shall maintain the premises in pre-existing condition, and shall repair immediately any damages to the premises caused by Contractor's operations.

15.10. Payment

A. Unless noted otherwise, full compensation for furnishing all labor, materials, tools, equipment and incidentals, and for doing all work involved in complying with all requirements under Section 15, "Work Constraints and Site Restrictions" shall be considered incidental and included in the prices bid for various items of work and no additional payment will be made therefore.

SECTION 16. SAFETY AND SECURITY

16.01. Safety

A. The Contractor shall be solely and completely responsible for conditions of the jobsite including safety of all persons and property during the performance of the work, except from District's sole negligence or intentional misconduct. This requirement shall apply continuously until the Contract is terminated and shall not be limited to normal working hours.

B. The Contractor is hereby informed that work on this Project could be hazardous. The Contractor shall instruct all personnel working in potentially hazardous work areas of the potential dangers and shall provide such safety equipment and instruction as is necessary to prevent injury to personnel and damage to property. Special care shall be exercised relative to work around high-voltage wires, high-pressure gas mains, high-pressure water pipelines, and other utilities. Temporary supports, as required by the utility company, shall be provided by the Contractor to protect utility facilities.

C. All work and materials shall be in strict accordance with all applicable City, County and State Rules, Ordinances, Regulations, and Codes. The Contractor shall comply with CAL-OSHA Labor Code Section 6300 et seq. and with Chapter 4 of Title 8 of the California Administrative Code. Nothing in these Specifications shall be construed to permit work not conforming to governing codes. When Contract Documents differ from governing codes, the Contractor shall furnish and install the higher standards called for without extra charge.

D. Prior to start of work, the Contractor shall submit an Injury and Illness Prevention Program in accordance with CAL-OSHA requirements, Title 8, CCR Section 1509 (Construction). In addition, the Injury Illness Prevention Program shall comply with Title 8, CCR Section 3203 (General Industry) and/or Section 8406 (Tunnel) as deemed necessary. A copy of the program shall be available at all times in the Contractor's jobsite trailer. The Contractor shall designate a safety officer who will monitor and enforce the Injury and Illness Prevention Program.

E. For projects involving hazardous waste operations, the Contractor shall develop and implement a written Safety and Health Program and a site-specific Safety and Health Plan, and designate a Site Safety and Health Supervisor who has the responsibility and authority to develop and implement the site-specific safety and health plan and verify compliance, in accordance with Title 8 CCR Section 5192.

F. Contractor shall comply with Article 16.02 "Safety and Health Program" of these Specifications.

G. At all times the Contractor shall provide for public safety and convenience. The Contractor's operations shall be conducted so as to offer the least possible obstruction and inconvenience to the public along with the greatest safety to the

public. At no time shall the Contractor have more work underway than can be prosecuted with proper regard to these considerations to the public.

H. At all times the Contractor shall provide sufficient measures, such as, but not limited to: barricades, railings, lights, fences, and any other warning devices, to reasonably and prudently provide for the greatest public safety and convenience.

I. The Contractor is referred to Article 5.14 “Excavation Safety Plans” of these Specifications.

J. The services of the Engineer in conducting construction review of the Contractor’s performance are not intended to include review of the adequacy of the Contractor’s work methods, equipment, bracing or scaffolding, or safety measures, in, on, or near the construction site.

K. The Contractor shall provide all safety measures required to ensure the public safety as required by Article 6.09 “Public Safety” of these Specifications.

L. When working on District or Santa Clara County property, the Contractor shall erect temporary fences and install warning signs around any trenches left open outside the working hours indicated in these Specifications to prevent access to the trench.

M. For work within public streets, the length of trench remaining unbackfilled shall not exceed 100 feet. For work outside of public streets, the length of unbackfilled trench shall not exceed twice the actual daily production rate of completely installed and backfilled pipe, unless approved in writing by the Engineer. For the first 3 days of pipe laying operation, the actual daily production rate shall be assumed to be 100 feet of completely installed and backfilled pipe. The actual daily production rate for succeeding days shall be determined by the daily average of pipe completely installed and backfilled during the 3 preceding working days as determined by the Engineer. The Contractor’s shall conform to these Specifications and the State Specifications for backfill, or placement of a steel plate all open trenches within the roadways at the end of each working day.

16.01.01. Temporary Facilities

A. Use construction hoists, elevators, scaffolds, stages, shoring, and similar temporary facilities of ample size and capacity to adequately support and move loads to which they will be subjected. Provide railings, kick-plates, enclosures, safety devices and controls required by law or regulation, or for adequate protection of life and property.

B. Staging and Falsework: Temporary support such as formwork, falsework, or shoring shall be designed and constructed in accordance with Construction Safety Orders, CCR Title 8, Sections 1541.1 and 1717. Sheet pile vibration and driven piles for shoring shall not be allowed. The falsework plan, shoring plan,

and any required calculations shall be submitted to and accepted by the Engineer prior to commencement of any work on site.

C. Warning Devices and Barricades: Identify and guard hazardous areas and conditions by visual warning devices and, where necessary, physical barriers per CAL-OSHA requirements, the latest version of the California Manual on Uniform Traffic Control Devices for Streets and Highways (MUTCD) and State agency permit conditions.

D. Barricades: Place barriers at ends of excavations and along excavations to warn pedestrian and vehicle traffic of excavations. Provide barriers with flashing lights after dark. Keep barriers in place until excavations are entirely backfilled and fully compacted. Barricade excavations to prevent persons from entering excavation areas in streets, roadways, parking lots, or other public or private areas associated with the Project.

E. Temporary Enclosures: When sandblasting, spray painting, spraying of insulation, fireproofing, or other activities inconveniencing or dangerous to property or the health of employees, District staff, or the public are in progress, the area of activity shall be enclosed adequately to contain the dust, over-spray, or other hazard. In the event there are no permanent enclosures of the area, or such enclosures are incomplete or inadequate, the Contractor shall provide suitable temporary enclosures. Contractor shall submit a temporary enclosure plan for protection of open bodies of water from contamination for Engineer's review in accordance with Technical Provisions of these Specifications. Temporary enclosures shall not hinder or adversely affect treatment plant operations.

F. Above Grade Protection: On multi-level structures, the Contractor shall provide safety protection that, as a minimum, shall meet the requirements of Title 8, California Code of Regulations.

G. Fences: Enclose site of the work with fence adequate to protect the work as necessary against acts of theft, violence, and vandalism. When entire or part of site is to be permanently fenced, permanent fence may be built to serve for both permanent and temporary protection of the work site, provided that damaged or defaced fencing is replaced prior to final acceptance.

16.02. Safety and Health Program

A. The Contractor shall comply with Title 8 CCR, Section 5192, and shall develop and implement a written safety and health program and a site-specific safety and health plan for employees involved in hazardous waste operations. The program shall be designed to identify, evaluate, and control safety and health hazards, and provide for emergency response for hazardous waste operations. The written safety and health program shall incorporate the following:

- An organization structure;
- A comprehensive workplan;
- A site-specific safety and health plan;
- The safety and health training program;
- The medical surveillance program;
- The Contractor's standard operating procedures for safety and health; and
- Any necessary interface between general program and site-specific activities.

16.02.01. Site-Specific Safety and Health Plan

A. The Contractor shall develop, implement and verify compliance of a site-specific Safety and Health Plan for work on this Project.

B. The Safety and Health Plan shall conform to the requirements of all local, state, and federal ordinances, rules, regulations, and guidelines concerning occupational health and safety issues. It shall also include protocol to be utilized in the event unexpected materials or substances are encountered.

C. The Safety and Health Plan shall consist of procedures for the protection of the Contractor's personnel, including subcontractors, District personnel, consultants, inspectors, and supplier personnel working with hazardous materials, and the general public from site-specific hazards.

D. The Safety and Health Plan shall be prepared and signed by a Certified Industrial Hygienist (CIH). The Safety and Health Plan shall identify the supervisor who is responsible for the implementation of Plan

E. Should the types of activities and associated hazards change during the course of work, the Contractor's CIH shall amend the appropriate sections of the Safety and Health Plan to reflect the changed site conditions. The revisions shall address the specific potential hazards to workers and any others who will be involved in the construction that could result from exposure to the new hazard(s).

F. The Contractor shall keep a copy of the Safety and Health Plan at the job site at all times, and shall provide a copy to all personnel working on site. All Contractor personnel performing work on site shall be required to read the Safety and Health Plan and shall be required to sign an acknowledgment that he/she has obtained and read a copy of the Safety and Health Plan. No worker shall be allowed to perform work on the site until a copy of his /her signed

acknowledgment has been submitted to the Engineer by the Contractor. At a minimum, the Safety and Health Plan shall consist of the following items:

1. ***Project Organization***: To include Project Manager, Project Site Safety Officer, Superintendent, Forepersons, Subcontractors, any team leaders, and other workers, and shall address their roles and responsibilities.

2. ***Workplan***: Address anticipated project activities and objectives of the site operations; identify performance tasks for the Project, methods, and activities for accomplishing these tasks, task hazard analysis for each task activity listed in the Safety and Health Plan, personnel requirements, personnel training requirements, and medical monitoring requirements for site personnel.

3. ***Site Safety Meetings***: Include the frequency of the meetings, who will conduct the meetings, time of day meetings will be held, general topics that will be covered at the meetings, and documentation protocol.

4. ***Employee Training Assignments***: Discuss the training elements and the employees who received the training.

5. ***Review of the Site History for Overall Hazard Characteristics***: Discuss physical and health hazards, site characterization, and known and potential exposures to hazardous materials.

6. ***Site Control Program***: At a minimum, specify the site work zones, site personnel training requirements for each class/type of worker, site protective clothing requirements, safe working practices, and site communication.

7. ***Personnel Medical Monitoring Requirements***: Discuss requirements for each class/type of worker to be on site and special condition hazards.

8. ***Personnel Protective Equipment Program***: At a minimum, specify selection, personnel training requirements, equipment storage requirements, equipment maintenance and repair requirements, equipment decontamination requirements, and equipment limitations.

9. ***Engineering Controls***: Specify additional Engineering controls to be used for workplace safety, if any.

10. ***Monitoring***: As applicable, at a minimum, specify monitoring methodology, frequency of monitoring, personnel training requirements to monitor, equipment to be used, equipment calibration methodology, and documentation protocol.

11. ***Material Handling***: As applicable, specify machinery and equipment to be used, tools to be used, containers to be used, and personnel training requirements for operators.

12. ***Decontamination***: As applicable, specify procedures for decontamination area construction, personnel decontamination, equipment decontamination, reinstate control, protective clothing debris control, and decontamination station personnel requirements.

13. ***Emergency Response Program***: At a minimum, specify directions to the nearest medical facility, decontamination procedures for injured workers, and emergency equipment available on site.

14. ***Spill Contamination Contingency Program***: Shall include provisions for gases, liquids, and solids.

15. ***Sanitation Facilities***: Identify availability for workers and provisions for different sexes.

16. ***Illumination***: If used during the Project, specify the condition requirements for use, type of illumination to be provided, and illumination locations on site.

17. ***Confined Space Entry***: Discuss personnel protective equipment, ventilation method and equipment, illumination method and equipment, atmosphere testing and equipment, safety protocol, and documentation protocol.

18. ***Site Excavation***: Discuss types of equipment to be used, personnel training requirements, safety practices to be utilized, open excavation construction, and personnel entry safety.

19. ***Safety Inspections***: Identify scope of inspections, frequency and time of inspections, personnel qualification of inspector, and communications protocol.

G. The Contractor shall comply with the Safety and Health Plan. Noncompliance with the Safety and Health Plan shall be grounds for temporary suspension of all work. Suspension of work for noncompliance shall not be grounds for additional time or compensation.

H. The Safety and Health Plan may be revised and/or amended by the Contractor and the Contractor's CIH as necessary during work progress and as specified in these Specifications. Revisions and/or amendments to the Safety and Health Plan shall be considered incidental to this item of work and no additional payment shall be made therefore.

16.02.02. Safety and Health Plan Implementation

A. Providing for worker safety and personal protection shall be the Contractor's responsibility and shall be in accordance with the Contractor's Safety and Health Plan. The Contractor shall be responsible for providing any and all training, monitoring, personal protective equipment, protective clothing, devices, equipment, and/or facilities necessary for ensuring worker safety as may be recommended and/or specified in the Contractor's Safety and Health Plan.

B. The Contractor shall be responsible for ensuring that its personnel understand and comply with all site health and safety requirements specified in the Safety and Health Plan.

16.02.03. Submittals

A. The Safety and Health Plan shall be submitted and accepted by the Engineer prior to commencement of any work on site.

B. The District may review or comment on the Safety and Health Plan. The District's review, or comment on, the Plan does not, in any way, relieve the Contractor of (i) any responsibility or liability for the Plan, and (ii) being solely, fully, and completely responsible for the safety of all persons and property at the job site.

16.03. Security Requirements at Job Site

A. Contractor shall make adequate provision for the protection of the work area against fire, weather, theft, vandalism, and for the protection of the public against exposure to injury. All costs arising from theft, fire, or vandalism of the construction materials and equipment shall be borne by the Contractor.

B. During night hours, weekends, holidays, and other times when no work is performed at site, Contractor shall provide temporary closures or enlist services of security guards to protect temporary openings.

C. During night hours, weekends, holidays and other times when no work is performed at the site, Contractor shall enlist the services of security guards to protect the Engineer's Office.

D. The Contractor shall not allow his/her staff to stay at the project site outside of normal hours or authorized work hours.

E. All guests to the project site are required to check in at the field office.

16.03.01. NOT USED

16.03.02. NOT USED

16.03.04. NOT USED

16.03.05. NOT USED

16.03.06. NOT USED

16.04. Payment

A. Unless noted otherwise, full compensation for furnishing all labor, materials, tools, equipment and incidentals, and for doing all work involved in complying with all requirements under Section 16, “Safety and Security” shall be considered incidental and included in the prices bid for various items of work and no additional payment will be made therefore.

SECTION 17. PERMITS AND REGULATIONS

17.01. Permits and Agreements and Regulations

17.01.01. District Obtained Permits and Agreements

A. This Project is partially funded by the United States Department of Agriculture National Resource Conservation Service (NRCS) with funds from the American Recovery and Reinvestment Act (ARRA). The Cooperative Agreement-Locally Awarded Contract between the District and NRCS mandates compliance with federal requirements as a condition of receiving the funds. The contract documents require the contractor to comply with all applicable federal requirements. The federal requirements are stated in Appendix B, attached herto and incorporated herein by this reference. In resolving conflicting requirements between the contract documents Appendix B takes precedence.

B. The District has or will obtained permits for work on this Project from the following agencies having jurisdiction:

- NPDES General Permit
- City of San Jose Encroachment Permit
- Santa Clara County Encroachment Permit
- Caltrans Encroachment Permit
- 404 Permit from the U.S. Army Corps of Engineers Permit No. 243175;
- 401 Water Quality Certification/Waste Discharge Requirements from the Regional Water Quality Control Board Order R2-2002-0012;
- 1602 Streambed Alteration Agreement from the California Department of Fish and Game, Notification Number R3-2001-0132).

C. Copies of the permits are attached to these Specifications as Appendix C, unless otherwise indicated and made a part hereto.

D. The Contractor shall refer to the following Articles for requirements in compliance with the above permits:

1. Article 15.05.03—Temporary Construction Easements (TEC's)
2. Article 17.02—Hours of Work (CEQA REQUIREMENTS)
3. Article 17.03—Noise Pollution and Vibration
4. Article 17.06 - Traffic Control (City of San Jose Encroachment Permit)
5. Article 17.07 - Truck Traffic and Hauling (City of San Jose Encroachment Permit)
6. Section 18 – Environmental (NPDES General Permit and others)

E. It is the Contractor's responsibility to become familiar with the requirements and conditions of these permits and regulations. Contractor and his subcontractors shall comply with all requirements and conditions of the above regulations and permits, including water quality testing. The cost of any fines, penalties or reparations for failure of Contractor to comply with the requirements and conditions of said regulations and permits shall be the responsibility of the Contractor, and no such costs will be to the District.

17.01.02. Contractor Obtained Permits

A. It shall be the Contractor's responsibility to obtain any and all permits that may be required from City, County, or State for construction, moving materials and equipment to and from the jobsites, and for traffic control to and from the jobsites.

B. Contractor shall be responsible for obtaining and paying all fees and incidentals required for a permit from the City of San Jose for haul routes, traffic control, including land and street closures and required for the project and in accordance with Section 17.06, "Traffic Control" of these Specifications.

17.01.03. Operation Regulations

A. NOT USED

17.02. Hours of Work

A. Unless noted otherwise, no work, including material hauling to/from the site and equipment movement, shall be performed during the days and hours restricted by and set forth in this Article.

B. Channel Work by the Contractor shall occur only between the hours of 8 a.m. and 5 p.m. Monday through Friday. Saturday work will occur only between the hours of 9 a.m. and 5 p.m. Work includes material deliveries and equipment warm up and idling. No work will be performed by the Contractor between the hours of 5 p.m. and 8 a.m. except as provided herein and approved by the Engineer. The operation of trucks and heavy equipment outside of the project limits shall conform to the local haul route permit except as specified herein. Truck hauling will occur only between the hours of 9 a.m. and 4 p.m. No trucks will be operated for the Project by the Contractor between 4 p.m. and 9 a.m. outside of the project limits. Trucking hours may be further restricted by the City of San Jose.

C. Street Work by the Contractor shall occur only between the hours of 8:15 a.m. and 4:15 p.m. for all work on minor streets, and 8:30 a.m. and 3:30 p.m. for all work on major streets, Monday through Friday. If any work is to be scheduled on nights, weekends or holidays, submit proposed days and hours of work to the City of San Jose at least two (2) days prior to work. Only between the hours of 9 a.m. to 3 p.m., when working within or near a signalized intersection, traffic shall be controlled by reserve police officers or certified flaggers. Officer shall be

scheduled through SJPD secondary employment unit, five (5) working days in advance. Call (408) 277-4980.

D. No work shall be permitted on Sundays, and holidays except for special or emergency cases approved by the Engineer. If any of the holidays should fall on a Sunday, the following Monday shall also be considered a holiday; and if a holiday should fall on a Saturday, the previous Friday shall also be considered a holiday. Holidays are defined as the following: New Year's Day, Martin Luther King's Birthday, Presidents' Day, Memorial Day, Independence Day, Labor Day, Columbus Day, Veteran's Day, Thanksgiving Day, and Christmas Day.

E. The Contractor shall be required to pay the overtime costs (premium cost above and beyond normal daily rates) for District inspection on Saturdays and on holidays (if holiday work is allowed by the Engineer).

17.03. Noise Pollution and Vibration, Bid Item Nos. 1D, 57C, 83C, 120C

17.03.01. Noise

A. The Contractor's attention is directed to Article 6.29, "Noise Pollution and Vibration" in the Standard Provisions of these Specifications.

B. It shall be the Contractor's responsibility to keep noise pollution, due to these construction activities, as low as possible. In no case shall noise levels produced by the Contractor exceed local jurisdiction.

C. In no case shall the noise levels produced by the Contractor exceed any of the following maximum levels at the Project right of way line:

<u>Single- and Two-Family Dwelling Residential Area:</u>

Weekdays: 7 a.m. to 7 p.m.	75 dBA
Weekdays: 7 p.m. to 7 a.m.	50 dBA
Saturdays, Sundays, and Holidays:	50 dBA

<u>Multifamily Dwelling Residential Area:</u>

Weekdays: 7 a.m. to 7 p.m.	80 dBA
Weekdays: 7 p.m. to 7 a.m.	55 dBA
Saturdays, Sundays, and Holidays:	55 dBA

<u>Commercial and Industrial Areas:</u>

Weekdays: 7 a.m. to 7 p.m.	85 dBA
Weekdays: 7 p.m. to 7 a.m.	60 dBA
Saturdays, Sundays, and Holidays:	60 dBA

For areas where construction activities are adjacent to more than one land zone, the Contractor shall comply with the more restrictive noise criteria.

Steady, audible tone of equipment or machinery that must be left on continuously shall not exceed the above standards minus 5 dBA.

D. Material stockpiles and mobile equipment staging, parking, and maintenance and equipment staging areas shall be located as shown on the Drawings.

E. The Contractor shall post readily visible informational signs at the entrance to the construction site indicating that the site is a “NOISE CONTROLLED ZONE” and that persons and machinery may be barred from the site for violations of the noise control plan and regulations.

F. NOISE MONITORING: Monitoring shall be performed by Contractor using a Type 1 Sound Level Meter, as specified by the latest ANSI standards, measuring a dynamic range of 40-120 dB. Noise levels shall be A-weighted with a minimum sampling rate of 64 samples per second (Fast). Root Mean Square (RMS) sound pressure levels (SPLs) shall be expressed by the descriptors L (max) and Leq(h). Microphones shall be equipped with windscreens and shall be positioned as designated by the Engineer. Monitoring shall be performed for a duration of at least 60 minutes during each work operation. Additional spot readings shall be taken as directed by the Engineer to assure the noise level during work operations are within the allowable limits. Noise monitoring equipment shall be calibrated before each work shift. The noise monitor shall print data to a serial printer, providing immediate on-site results. The Contractor shall keep a copy of all documentation and submit one copy to the Engineer on a daily basis.

17.03.02. Vibration Monitoring

Vibration monitoring shall consist of furnishing all labor, materials, tools, equipment and incidentals for monitoring the vibrations of existing structures and improvements, including furnishing and installing the vibration monitoring equipment, and monitoring and documenting vibrations.

A. The Contractor shall take all necessary precautions during its operations to limit peak particle velocities from heavy equipment operations, pile hole drilling, structure installation or other operations so that they do not become a public nuisance or result in property damage.

B. Contractor’s compliance with this Section does not relieve the Contractor of full responsibility for damage caused by the Contractor’s operations.

C. This work shall consist of vibration monitoring as a means of identifying the need to take precautionary measures due to excess vibration from construction activities at the location shown in Table 15.1 “Building/Feature Movement, Crack, and Vibration Minimum Monitoring Locations,” of these Specifications. The minimum number of

vibration monitoring locations for the Base Bid and Bid Additive Items, with possible multiple monitoring devices at some, or all of the locations.

D. At minimum, for the locations listed in Table 15.1, vibration monitoring and recording shall be performed within 200 feet of the said locations during the course of all activity, and for other significant impact work as determined by the Engineer. At a minimum, all structural removal, shoring installation, demolition work, RCB placement, Cast-in-Drilled-Hole pile construction, and pile placement and related activities shall be considered as significant impact work and shall be monitored as provided herein.

E. Prior to performing any vibration monitoring, including the baseline vibration monitoring and during significant impact work, the Contractor shall submit to the Engineer a written plan (Contractor's Plan) detailing the procedures for vibration monitoring. Such details shall include:

- The name of the firm providing the vibration monitoring services.
- Description of the instrumentation and equipment to be used.
- Methods for mounting the instrumentation to the ground.
- Data collection analysis procedure.
- Number of vibration monitors to be utilized at each of the locations specified in Table 15.1, their proposed placement and identification of which monitors will be located inside the structure, if any and which will be external to the structure.
- Contractor's recommended maximum allowable peak particle velocity for each location in Table 15.1, based on structural facility specifics. The maximum allowable peak particle velocity assigned shall be either:

    a. 0.2 for monitoring architectural damage

    b. 0.5 for monitoring structural damage only

- Means and methods of providing warning when particle velocity equals to or exceeds specified limits.
- Name of the responsible person designated by the Contractor.
- A contingency plan for alternative construction methods when particle velocity equals or exceeds specified limits.

F. Once the vibration monitoring plan is submitted and marked as received by the Engineer, the vibration monitoring equipment shall be furnished and installed by

the Contractor at the facilities designated herein when significant work occurs within 200 feet of the said facilities. The 200 feet shall be measured from the source of vibration such as the column nearest to the actual demolition work, the location of the equipment, the pile location or from the point of probable impact of any fallen structural elements, materials, equipment, bridge elements, shoring, or debris.

G. The first vibration monitoring prior to start of seismic activity shall establish the baseline for all subsequent recordings. The baseline recordings shall consist of uninterrupted recordings for a period of not less than 24 hours at the above listed locations. The Contractor shall have the equipment in place and functioning properly prior to any impact activity within 200 feet of the affected property. No impact activity occurring within this zone shall occur unless the monitoring equipment is functioning properly. The equipment shall be set up in a manner such that an immediate warning is given when the resultant peak particle velocity equals or exceeds the maximum allowable peak particle velocity, for the structure/facility designated in the Contractor's plan.

H. Monitoring equipment shall be stationed within 3 feet of the exterior of designated buildings on the side facing the Contractor's work site. For buildings whose frontage exceeds 200 feet, at least 2 monitors shall be utilized at that location.

I. The vibration monitoring equipment shall be capable of continuous operation with instant monitoring results and shall conform to the following requirements:

- The velocity sensing transducers shall be capable of measuring velocities on the three perpendicular axis (i.e., V_x, V_y, and V_z) simultaneously.
- Frequency response of the velocity transducers and data acquisition equipment shall cover the range from less than 5 Hz to more than 100 Hz. Sensitivity of the velocity transducers shall range below 0.001 inch per second to more than 2.000 inch per second.
- Velocity transducers shall be field calibrated prior to use.
- The data acquisition equipment shall be capable of simultaneously recording individual velocity transducers, in digital format, time-domain data (i.e., time vs. particle velocity) for each of the transducers.

J. The vibration shall be monitored continuously by the responsible person designated by the Contractor while significant impact work is in progress. The vibration monitoring equipment at each location shall operate continuously.

K. The vibration monitoring data shall be recorded contemporaneously and plotted continuously in ink on graph by the data acquisition equipment. The graph shall conform to the following:

- Each graph shall show time-domain wave traces (particle velocity versus time) for each transducer.
- The graph shall have the same vertical and horizontal axis scale.
- The resultant particle velocity shall be plotted on the graph instantaneously.

L. The equipment shall be set up in a manner such that an immediate warning is given when the resultant peak particle velocity is equal to or greater than the maximum allowable peak particle velocity for the location as set forth in the Contractor's Plan. The peak particle velocity shall be derived from the component particle velocity Vx, Vy, and Vz and shall be equal to the square root of the sum of Vx2+Vy2+Vz2.

M. The warning emitted by the vibration monitoring equipment shall be instantaneously transmitted to the responsible person designated by the Contractor by means of warning lights, audible sounds, or electronic transmission. The responsible person shall have the authority to stop the work causing the vibration.

N. When the peak particle velocity reading on monitoring equipment equals or exceeds the maximum allowable peak particle velocity for the structure/facility per the Contractor's Plan, work shall immediately cease and the Contractor shall implement the approved contingency plan to reduce and maintain the monitoring equipment reading below the maximum allowable peak particle velocity before resuming work. The Contractor shall immediately notify the Engineer every time the vibration equals to or exceeds maximum allowable peak particle velocity.

O. After the completion of the baseline vibration monitoring and vibration monitoring during significant impact work at each of the facilities designated herein, the Contractor shall submit to the Engineer a daily report documenting the results of the vibration monitoring. Each building or facility shall have a separate report. The reports shall be signed by an engineer who is registered as a Civil Engineer in the State of California, who is experienced in and who has expertise in the field of vibration monitoring. The report shall include the following:

- Project identification, location, project name as shown on the project plans.
- Location of monitoring equipment, including address of monitored building or facility
- Location of vibration source (i.e., pile drilling equipment).

P. The District will retain an amount equal to 25 percent of the estimated value of the work performed during the estimate period in which the Contractor fails to submit the vibration monitoring reports conforming to the requirements of this section, as determined by the Engineer.

Q. The Contractor's vibration-monitoring personnel which include those persons, firms, or entities providing vibration monitoring, recording, documentation and the production of the reports shall have the qualifications specified herein. These personnel may be on the staff of the Contractor. However, they shall not be employed nor compensated by subcontractors, or by persons or entities hired by subcontractors, who will provide other services or material for the Project.

R. The Contractor's vibration-monitoring personnel shall include a qualified vibration Instrumentation Engineer who is a registered Professional Engineer in the State of California, and who has at least 4 years of experience in the installation and use of vibration-monitoring instrumentation and in interpreting instrumentation data. The Vibration Instrumentation Engineer shall:

- Be on site and supervise the initial installation of each vibration-monitoring instrument.
- Supervise interpretations of vibration-monitoring data.
- The Contractor's vibration-monitoring personnel shall be subject to the review of the Engineer.

S. The Contractor shall obtain written permission (or refusal) from each property owner prior to entering the property for the purpose of performing the work specified in this section. The Contractor shall provide to the Engineer a copy of all such permissions or refusals by property owners, prior to start of monitoring work on each property.

17.03.03. Payment

Full compensation for furnishing all labor, materials, tools, equipment and incidentals and for doing all work involved in complying with all requirements under Article 17.03 "Noise Pollution and Vibration", including preparing the monitoring plan(s), performing the monitoring, implementation of contingency plan(s), preparing, submitting, and maintaining all reports and documentation, as specified in these Specifications, and as directed by the Engineer, shall be included in the lump sum price bid for NOISE AND VIBRATION MONITORING, Bid Item No. 1D, and Bid Additive Item Nos. 57C, 83C, and 120C if/when included in the awarded project by the District.

Locations in excess of the number shown in Table 15.1 of these Specifications, directed by the Engineer, to receive vibration monitoring will be paid for as extra work as provided in the Article for Extra Work As Directed By The Engineer.

If the Contractor elects to monitoring at locations in addition to those shown in Table 15-1 "Building/Feature Movement, Crack, and Vibration Minimum Monitoring Locations" of these Specifications, without prior approval from the Engineer, said work shall be at Contractor's own expense and at no additional costs to the District.

17.04. Air Pollution

A. Contractor's attention is directed to Article 6.30, "Air Pollution" in the Standard Provisions of these Specifications.

17.05. Spillage and Dust

A. Contractor's attention is directed to Article 6.31, "Spillage and Dust" in the Standard Provisions of these Specifications.

B. Vegetation in disturbed areas shall be replanted as soon as horticulturally appropriate. For example, plant material may not be ready as soon as the job is done (e.g., willow cuttings have to be collected during winter dormancy). If planting of the required vegetation is not horticulturally feasible, an acceptable temporary measure shall be installed.

C. The Contractor shall perform regular street sweeping of local streets to remove cumulated dust and spillages resulting from Contractor's operations.

17.06. Traffic Control

A. The Contractor's attention is directed to Article 6.32, "Traffic Control" and Section 27, "Traffic Control" of the Standard Provisions of these Specifications.

B. All traffic control work shall be performed in accordance with the standard drawings and specifications applicable to the agency responsible for the area the work is being performed. Said agency standard drawings and specifications include: the City of San Jose; County of Santa Clara; California MUTCD; and the State Specifications. The Contractor shall prepare a Traffic Control Plan to be signed and stamped by Professional Civil Engineer registered in the State of California.

C. The Traffic Control Plan shall address all traffic control measures as shown on the Drawings and specified in these Specifications. The traffic control measures shown on the drawings are the minimum necessary for the work and additional measures may be required by the governing agency.

D. Traffic control work shall include, but not limited to, removing and replacing traffic control systems, fencing, railing, barricades, crash cushions, channelizers, AC pavement, driveways, curb, gutters and sidewalk and pavement markings, and construction area signs necessary for traffic staging on public streets adjacent to or near the project area, and any other miscellaneous work necessary to

complete the traffic control as specified in these Specifications and as directed by the Engineer.

E. If any component in the traffic control system is displaced, or ceases to operate or function as specified during the progress of the work, the Contractor shall immediately repair said component to its original condition or replace said component and shall restore the component to its original location.

F. No stockpiling of materials or parking of equipment will be allowed on streets and sidewalks.

G. All construction signs shall be placed in the field and shall be visible to drivers and not covered or blocked by trees or other fixed objects.

H. The Contractor shall verify any sprinkler system conflicts before installing construction area signs in planting strips. Contractor shall replace landscaping upon removal of construction area signs, if needed, and as directed by the Engineer.

I. The Contractor shall ensure levels of operation acceptable to the Engineer, as well as perform inspections of traffic control zones on a daily basis.

J. All streets and sidewalk areas shall be swept clean in accordance with these Specifications.

17.07. Truck Traffic and Hauling

A. The Contractor shall obtain, at Contractor's expense, a "Haul Route Permit" from the City of San Jose for transporting to and from the project site construction materials and disposal of surplus materials over the City of San Jose streets.

B. Trucks traffic and haul routes shall be in compliance with local permits and ordinances and as further specified herein.

C. Hauling hours are strictly limited to a daily operating schedule of 9:00 a.m. to 4:00 p.m., unless approved in advance by the Engineer in writing. The Contractor shall not perform any loading or unloading activities or any other related operations outside the project limits, or outside the hours of work as defined in these Specifications, including Article 17.02, "Hours of Work" of these Specifications.

D. The Contractor shall post information signs for truck drivers at approved locations indicating truck traffic hour restrictions. Sign shall be readily visible. Violators shall be warned or barred from the site.

E. All hauling and delivery truck schedules shall be submitted to the Engineer for review within 72 hours prior to occurrence.

17.07.01. Truck Arriving Early, Truck Idling and Queuing

A. The District actively seeks to avoid or minimize unnecessary disturbance of the neighborhood from construction activities. Accordingly, all deliveries shall be coordinated to ensure that no delivery vehicles arrive at the site entry gate before 8:30 am to prevent disruption of the neighborhood.

B. No idling or queuing shall take place on any residential streets in the surrounding neighborhood except for reasons noted below:

- idling when the vehicle must remain motionless due to an official traffic control device, traffic control signal, or at the direction of a peace officer, or traffic conditions over which the driver has no control;
- idling when being forced to remain motionless due to adverse weather conditions or due to mechanical difficulties over which the driver has no control;
- idling to verify that the vehicle is in safe operating condition as required by Law;
- idling at the site entrance for security checks or searches by District guards.

C. The Contractor shall control truck traffic such that at any given time only two (2) trucks shall be permitted on residential streets, unless otherwise approved in writing by the Engineer.

17.08. Parking

A. Trucks and Contractor personnel vehicles parking, and access shall be in compliance with local permits and ordinances and as further specified herein.

B. All construction equipment and worker vehicles arriving at the site shall park within the site or as indicated in the Drawings or as directed by the Engineer. Worker personnel vehicles are allowed to park on neighborhood streets in those areas that allow street parking within close proximity of the site. Worker vehicles shall not block existing driveways or other driveway access at any time. Workers shall enter the site as soon as they arrive to the site.

C. Workers shall not arrive onto the site no more than thirty (30) minutes prior to the start of work nor remain on the site thirty (30) minutes after the end of work. The Contractor's access gates shall remain locked during the hours when construction is not allowed, except for the thirty (30) minute period preceding and following the hours of construction. The Contractor's attention is directed to Article 17.02, "Hours of Work" of these Specifications.

D. No trucks or Contractor personnel vehicles shall park in the areas outside of the District right of way as delineated on the Drawings and as specified herein unless approved in writing by the Engineer. Construction equipment is prohibited from parking or queuing on neighborhood streets unless otherwise approved in writing by the Engineer.

E. The Contractor shall not perform any loading or unloading activities or any construction related operations outside or adjacent to the project limits unless approved in writing by the Engineer.

17.09. Discovery of Archeological Artifacts and Human Remains

A. No known archeological sites were discovered on the site. If, however, burials or archeological artifacts are encountered during construction, the Contractor shall halt work immediately within 50 feet of the find. A "no work" zone shall be established utilizing appropriate flagging to delineate the boundary of this zone. The Contractor shall secure and protect the zone from vandalism. The Contractor's attention is directed Article 6.27, "Burial Sites" and Article 6.28, "Delay Due to Archeological Discovery" of these Specifications, for additional requirements.

17.10. NOT USED

17.11. NOT USED

17.12. Utilities and Service System

The Contractor's attention is directed to Article 15.02, "Utilities" of these Specifications.

17.13. Payment

A. Unless noted otherwise, full compensation for furnishing all labor, materials, tools, equipment and incidentals, and for doing all work involved in complying with all requirements under Section 17, "Permits and Regulations" shall be considered incidental and included in the prices bid for various items of work and no additional payment will be made therefore.

SECTION 18. ENVIRONMENTAL

18.01. Compliance with NPDES General Permit – Bid Item Nos. 1A, 57A, 83A, 120A

A. The Contractor shall comply with the requirements of the State Water Resources Control Board (SWRCB) National Pollutant Discharge Elimination system (NPDES) General Permit for Storm Water Discharges Associated with Construction and Land Disturbance Activities (Order # 2009-0009-DWQ). A copy of the NPDES General Permit can be found at: http://www.waterboards.ca.gov/water_issues/programs/stormwater/docs/constpermits/wqo_2009_0009_complete.pdf.

B. The Contractor shall not violate any discharge prohibition contained in the California Regional Water Quality Control Board San Francisco Bay Basin Water Quality Control Plan (Basin Plan). For a copy of the Basin Plan, see attached link: http://www.swrcb.ca.gov/rwqcb2/water_issues/programs/basin_plan/docs/basin_plan07.pdf

C. All discharges are prohibited except for the storm water and non-storm water discharges specifically authorized by the NPDES General Permit.

D. Among the discharges prohibited by the NPDES General Permit include:

1. non-storm-water discharges such as improper dumping or leakage;

2. all discharges which contain a hazardous substance in excess of reportable quantities established in 40 C.F.R. §§ 117.3 and 302.4;

3. any debris from construction site;

4. other discharges as identified in the NPDES General Permit.

E. Certain non-storm water discharges from de-chlorinated potable water sources may be authorized such as: fire hydrant flushing; irrigation of vegetative erosion control measures; pipe flushing and testing; water to control dust; and uncontaminated ground water from dewatering, providing all the conditions are met as noted in the NPDES General Permit.

F. The Contractor shall prepare and submit to the District an electronic and hard copy of the Storm Water Pollution Prevention Plan (SWPPP) as required under NPDES General Permit. The SWPPP shall be in accordance with Section XIV of the NPDES General Permit.

G. The Contractor shall comply with the Risk Level 2 requirements of the NPDES General Permit.

18.01.01. SWPPP

A. The SWPPP shall incorporate all appropriate storm water BMP's and all risk-based requirements as described herein to comply with the NPDES General Permit. A source for BMP descriptions and a template for developing the SWPPP shall be in accordance with the 2009 *CASQA Construction BMP Handbook/Portal,* which can be purchased at http://www.cabmphandbooks.com at a cost of $200.

B. The SWPPP shall be written, amended, certified and stamped by a Qualified SWPPP Developer (QSD). The implementation of BMP's and all pollution control measures shall be overseen by a Qualified SWPPP Practitioner (QSP). The QSD and QSP shall be provided by the Contractor and shall meet the certification requirements as defined under Section VII of the NPDES General Permit.

C. The District will make available the following: base maps for Contractor's use in preparing the vicinity and site maps for the NPDES General Permit; a copy of pre-existing site and site design information; a copy of the completed Notice of Intent, if required.

D. The SWPPP shall be submitted to and shall have been favorably reviewed by the Engineer prior to commencement of any work at the site(s). Review by the Engineer shall not relieve the Contractor of responsibility for the completeness of the SWPPP, the accuracy of assumptions, data, and information used and procedures contained in the Contractor's SWPPP or the adequacy thereof.

E. The SWPPP shall be revised and/or amended by the Contractor's QSD, as necessary, during the progress of work to comply with local, state, and federal regulations and the requirements of these specifications. All revisions and amendments shall be submitted to the Engineer in accordance with the Article 9.02. "Submittals to be Furnished by the Contractor". Revisions and/or amendments to the SWPPP shall be considered incidental to this item of work and no additional payment shall be made therefore.

F. The District will electronically file all Permit Registration Documents in the State Water Board's Storm Water Multi-Application and Tracking System (SMARTS) website. The Contractor shall provide a copy of the SWPPP and Risk Assessments as defined under Attachment B of the NPDES General Permit, to the District per Article 19.01.01 Part D "Immediate Submittals."

G. The Contractor's personnel supervising the earthwork, site work, erosion control, sedimentation control, and inspecting erosion controls shall be required to read the SWPPP. A copy of the SWPPP shall be maintained at the construction site by the Contractor and shall be available at all times for review by all contractors, District, or regulatory agency personnel.

18.01.02. Storm Water BMPs

A. Storm Water BMP's shall be in accordance with the 2009 *CASQA Construction BMP Handbook/Portal,* which is available at www.cabmphandbooks.com.

B. The SWPPP shall include appropriate BMPs as required to comply with the specified Risk Level for the project. Appendix D includes a list of the minimum. BMP's applicable to the Project construction, and is not meant to be a complete listing of all BMP's applicable to the Project. The inclusion of this list in Appendix D of these Specifications does not relieve the Contractor in any way of the responsibility of determining the complete list of all BMP's that are applicable to the Project construction. It is the Contractor's responsibility to determine all BMP's that are required for the construction of the Project, and to include those where applicable in the Contractor prepared SWPPP and Erosion Control Plan.

C. The Contractor shall design, construct, operate, inspect, and maintain the BMP's in accordance with the NPDES general Permit and the guidelines provided in the 2009 *CASQA Construction BMP Handbook/Portal.*

D. The types of BMPs shall include, but not be limited to:

1. Erosion Control BMPs
2. Sediment Control BMPs
3. Runon and/or Runoff Control BMPs
4. Wind Erosion Control BMPs
5. Tracking Control BMPs
6. Non-stormwater Management BMPs
7. Waste Management and Materials Pollution Control BMP's

E. The Contractor shall comply with Section XII of the NPDES General Permit if choosing to implement an Active Treatment System as a BMP.

18.01.03. Not Used

18.01.04. Risk Level 2 Requirements

A. The Contractor shall comply with all Risk Level 2 requirements as outlined below in accordance with Attachment D of the NPDES General Permit.

1. Effluent Standards

   a. Narrative

   b. Numeric Effluent Standard:

      (1) pH NAL of 6.5 to 8.5; turbidity NAL of 250 NTU

2. Good Site Management "Housekeeping"

3. Non-Storm Water Management

4. Erosion Control

5. Sediment Control

6. Run-on and Runoff Controls

7. Inspection, Maintenance and Repair

8. Rain Event Action Plan

9. Risk Level 2 Monitoring and Reporting Requirements

    a. Construction Site Monitoring Program Requirements

    b. Objectives

    c. Risk Level 2 – Visual Monitoring (Inspection) Requirements for Qualifying Rain Events

    d. Risk Level 2 – Water Quality Sampling and Analysis

    e. Risk Level 2 – Storm Water Discharge Water Quality Sampling Locations

    f. Risk Level 2 – Visual Observation and Sample Collection Exemptions

    g. Risk Level 2 – Storm Water Sample Collection and Handling Instructions

    h. Risk Level 2 – Monitoring Methods

    i. Risk Level 2 – Analytical Method

    j. Risk Level 2 – Non-Storm Water Discharge Monitoring Requirements

    k. Risk Level 2 – Non-Visible Pollutant Monitoring Requirements

    l. Risk Level 2 – Watershed Monitoring Option

    m. Risk Level 2 – Particle Size Analysis for Project Risk Justification

    n. Risk Level 2 – Records

        (1) Submit monthly to the Engineer records of inspections and finding.

(2) Inspection records must be available for onsite review by Regional Water Quality Control Board and District.

o. Risk Level 2 – NAL Exceedance Report

10. Annual Reporting Requirements:

a. The Contractor shall comply with the Annual Reporting Requirements per Section XVI of the NPDES General Permit. The Contractor shall prepare and submit The Annual Report to the District by July 15 of each year. The Annual Report shall be submitted to and shall have been favorably received by the Engineer. The District will electronically file the Annual Report in SMARTS. The first Annual Report submittal year is 2011. An Annual Report in a given calendar year is not required when the Engineer determines in the final inspection that the work has been completed before September of that year.

18.01.05. Not Used

18.01.06. Regulatory Fines

A. The Contractor shall be responsible for any penalties or fines imposed upon the District by the RWQCB or other regulatory body due to the Contractor's noncompliance with the requirements of the NPDES General Permit. The actual cost of such penalties or fines will be subtracted from the amount due, or that may become due to the Contractor.

18.01.07. Payment

A. Full compensation for doing all work necessary to comply with the NPDES General Permit, including but not limited to, the preparation and implementation of the SWPPP, preparation of erosion control plans, installation and maintenance of erosion control and BMPs, and all materials, labor, equipment, service, supervision, documentation, and submittals as specified in these Specifications and as directed by the Engineer, shall be included in the lump sum price bid for COMPLIANCE WITH NPDES GENERAL PERMIT, Bid Item 1A and Bid Additive Item Nos. 57A, 83A and 120A, if/when included in the awarded project by the District.

18.02. NOT USED

18.03. NOT USED

18.04. Water Pollution Nuisance

A. The Contractor shall remedy immediately any public nuisance or deficiency arising from, or in consequence of Contractor's failure to perform the work specified under Article 18.02, "Compliance with NPDES General Permit" or Article 18.03, "BMP Action Plan" of these Specifications.

B. Upon the Contractor's failure to make appropriate and timely remedies as directed by the Engineer in the best interests of the public, the Engineer may employ private or public work forces and equipment to perform the work. The actual cost of employing such forces and equipment shall be doubled and then subtracted from the monies due, or that may become due, the Contractor. Such action(s) taken by the Engineer shall not preclude the Engineer from taking other appropriate actions, and shall not relieve the Contractor of responsibility to comply with these Specifications.

18.05. Regulated Material Management

The Contractor's attention is directed to Articles 6.34, "Regulated Material Management"; 6.35, "Non-Regulated Materials"; and 6.36, "Imported Earthfill Material" in the General Provisions of these Specifications.

18.05.01. Not Used

18.05.02. Not Used

18.06. Solid Materials Management

18.06.01. Definitions

A. ***Certified Facility—***A reuse, recycling, composting, or materials recovery facility meeting the required diversion percentages set forth in this specification which the Engineer has determined can accept diverted materials, has obtained all applicable federal, state and local permits and is in full compliance with all applicable regulations for reuse, recycling, composting and/or materials recovery.

B. ***Construction Waste—***Building and site improvement materials and other solid waste resulting from construction, remodeling, renovation, or repair operations. Construction waste does not include any of the above-specified materials/solid waste that contains contaminated or hazardous substances. Construction waste does not include excavated soil or groundwater.

C. ***Demolition Waste—***Building and site improvement materials resulting from demolition or selective demolition operations. Demolition waste does not include

any of the above-specified materials/solid waste that contains contaminated or hazardous substances.

D. ***Disposal—***Removal off-site of demolition and construction waste and subsequent sale, recycling, reuse, or deposit in landfill or incinerator acceptable to authorities having jurisdiction.

E. ***Divert/Diversion—***To use material for any lawful purpose other than disposal in a landfill or transformation facility.

F. ***Post-Consumer Recycled Content—***The percentage of a new product which contains material that was recycled from product that was used by the end consumer and then collected for recycling.

G. ***Recycle—***Recovery of demolition or construction waste for subsequent processing in preparation for use in some other form.

H. ***Salvage—***Recovery of demolition or construction waste and subsequent sale or reuse in the same form in another facility.

I. ***Transformation Facility—***A facility whose function is to convert, combust or otherwise process solid waste by incineration, pyrolysis, destructive distillation, or gasification or to chemically or biologically process solid waste for the purpose of volume reduction, synthetic fuel production or energy recovery. A composting facility is not a transformation facility.

18.06.02. Construction and Demolition Waste Management

A. The Contractor shall prepare and implement a Solid Materials Management Plan that results in a minimum end-of-project rate of recycle/salvage of 50 percent by weight of total construction and demolition waste generated by the work. Construction and demolition waste shall consist of the following materials: asphalt, concrete, masonry, and wood/lumber.

B. The Contractor shall submit a Solid Materials Management Plan identifying procedures to be used for management of construction and demolition waste generated by the work, including the facilities to be used for both disposal and recycling/salvaging and the estimated quantities and percentages (by weight) of construction demolition waste disposed and recycled/salvaged categorized by waste type. For each facility listed in the waste management plan, the Contractor shall provide facility name and address and facility owner name and contact information. This submittal shall be approved by the Engineer prior to commencement of any work on the project site.

C. The Contractor is directed to the City of San Jose's Construction and Demolition Deposit Program Certified Facility List (http://www.sjrecycles.org/business/pdf/cddd_certified_list.pdf) for local construction and demolition waste recycling

service provider listings. Additional recycling resources are available at www.ciwmb.ca.gov/condemo/ and www.crra.com/cdc/index.html.

D. Annually on the 25th of January, the Contractor shall complete and submit a Solid Materials Management Report Form which documents materials recycled/salvaged and disposed and demonstrates compliance with the requirements specified herein, facilities utilized, and weights of construction and demolition waste generated by the Project, as well as attach receipts that verify materials and quantities disposed and recycled/salvaged. The Form and receipts shall be included as a part of the Contractor's monthly progress pay request. This Form is included in Appendix E. The Contractor shall also complete and submit the Form with the request for final payment.

E. Full compensation for preparing the Solid Materials Management Plan and for completing the Solid Materials Management Report Form shall be considered as included in the contract price for various items of work involved and no additional compensation will be allowed therefore.

18.06.03. Post-Consumer Recycled Content Requirements

A. At the conclusion of the Project, the Contractor shall list the materials furnished/installed that contain post-consumer recycled content and document the percent content for each material item listed. This information shall be included in the Solid Materials Management Report Form specified in Article 18.06.02, "Construction and Demolition Waste Management" of these Specifications.

B. Full compensation for documenting the above-specified information in the Solid Materials Management Report Form shall be considered as included in the contract price for various items of work involved and no additional compensation will be allowed therefore.

18.07. Migratory Birds

The Contractor's attention is directed to Article 6.37, "Migratory Birds, Other Wildlife and Fish Species" in the General Provisions of these Specifications.

18.07.01. Regulatory Requirements

A. The Contractor shall carry out all activities in a manner consistent with the Migratory Bird Permit Memorandum (Appendix C, issued by the U.S. Fish and Wildlife Service dated April 15, 2003. Except as may be noted elsewhere in this Article, active nests are those containing either an egg (or eggs) or young, and/or nests used by birds of prey (i.e., members of the orders Falconiformes and Strigiformes, known as raptors) regardless of the presence of eggs or young; whereas inactive or partially-built nests of species other than raptors do not contain any eggs or young. To determine the occupancy of nests, the Contractor

shall rely upon the professional expertise of a qualified biologist. See Article 18.07.03, "Contractor Biologist" of these Specifications.

B. The Contractor shall coordinate several measures, including; awareness of which migratory bird species are protected, their nesting seasons and seasonal variability; surveys to determine the presence of nesting birds in the project area; establishment of protective buffer zones around nests; installation and maintenance of exclusion devices; and periodic monitoring to assure the adequacy of the compliance measures.

18.07.02. Scope of Work

A. The Contractor shall be aware of migratory bird nesting seasons and variability; monitor the project site; perform preventative and deterrence measures to prevent birds from nesting; preserve and protect pre-established protective buffer zones; perform surveys to determine the potential for protected species to be in the project area; establish new protective buffer zones around unprevented nests, as required; maintain and install exclusion devices, such as netting and/or wire mesh screens; periodically monitor to assure the adequacy of the compliance measures; and perform any other work as specified herein to comply with all applicable statutes.

B. Prior to the District releasing the site to the Contractor, the Engineer and the Contractor shall assess the site to determine the presence of nesting birds protected by all applicable statutes, as well as the existing protective buffer zones and exclusion devices within or near the construction areas.

C. The Contractor shall provide a District-approved biologist to monitor regulatory compliance and to coordinate with the Engineer, in conformance with: (i) this Article; (ii) the project-specific Mitigation Monitoring and Reporting Program (MMRP) requirements relating to this Article; and (iii) all applicable permit conditions.

D. The District will have monitored and controlled the site, including management of vegetation, installing and maintaining protective buffer zones and exclusion devices, as necessary, until the issuance of the Notice to Begin Work, at which time the site will be released to the Contractor. Upon accepting the site, the Contractor shall assume complete responsibility for the site, including vegetation management, existing protective buffer zones and exclusion devices, and shall perform all required work as specified herein.

18.07.03. Contractor Biologist

A. The Contractor shall employ a biologist meeting the qualifications of "Contractor Biologist" as listed in Appendix F to supervise all work under this Article. At anytime during the Contract, the District reserves the right to request a replacement biologist due to non-performance or for reasons outlined in Article 9.05, "Character of Workers" of these Specifications.

B. The Contractor Biologist shall:

- Monitor the project site for nest starts and occurrences of active bird nests.
- Document the location, status, and species of bird for each active nest.
- Monitor the Contract Work to ensure that protected birds are not disturbed in a manner that could result in non-compliance.
- Establish additional protective buffer zones around active nests, as specified herein.
- Ensure protective buffer zones are maintained and nests are not disturbed.
- Advise when protective buffer zones are no longer needed and can be removed.
- Monitor the maintenance and effectiveness of bird exclusion devices.
- Provide recommendations concerning vegetation management, installation of additional exclusion devices and maintenance of such devices to prevent bird nesting.

18.07.04. General Nesting Seasons

A. The nesting season in the project area is generally considered to be from February 1st through August 31st. However, annual variation in climatic conditions can alter these periods by several weeks.

18.07.05. Migratory Bird Surveys

A. The Contractor Biologist shall perform migratory bird surveys prior to any project-related activity that could pose the potential to affect migratory birds.

B. The Contractor shall notify the Engineer in writing at least 15 days and no more than 30 days in advance of initiation of project-related activities, such as movement of equipment, materials stockpiling, bridge work, clearing, grubbing, excavation, establishment of site access, etc.

18.07.06. Protective Buffer Zones

A. Existing protective buffer zones, if any, are shown on the Drawings or will be communicated to the Contractor prior to District releasing the site. In addition to District established buffer zones, new protective buffer zones will be required if a nest is established or discovered during the construction period. In the event that an active nest of a protected species is discovered in the construction area during construction, or in adjacent areas considered to have the potential to be disturbed by construction, the Contractor shall notify the Engineer and establish a protective buffer zone around the nest at the direction of the Engineer. The exact location of the boundaries of protective buffer zones shall be established by the Engineer. The Contractor shall install fence at the boundary of each new

protective buffer zone, except as otherwise directed by the Engineer. The Contractor shall preserve and protect all protective buffer zones, including existing ones, at all times.

B. The Contractor shall be responsible for any added costs or schedule delays as a result of establishment of new nests or new protective buffer zones due to the Contractor's failure to perform the bird exclusion responsibilities as specified under this Article.

C. The Contractor shall monitor protective buffer zone operations during construction. Requirements for the protection of active nests may vary depending on the location and the species involved. The following are general guidelines to be followed by the Contractor when an active nest is encountered:

- Stop any activities that may harm the nest.
- Contact the Engineer immediately.
- Only the Contractor's biologist should approach the nest, and only if necessary.
- The Contractor shall inform employees of the presence of an active nest and take steps, described above, to avoid disturbing it.
- Until inspected by the Engineer, a 20-foot radius protective buffer zone shall be established around the nest of any non-raptor, ground-nesting bird, and a 50-foot radius protective buffer zone around nests established in shrubs, trees, on structures, on equipment, etc., except for raptor nests. Furthermore, the protective buffer zone shall be 250 feet for hawks, owls (including burrowing owls), herons, and egrets. The Contractor's biologist may recommend, for approval by the Engineer, modification of these perimeters.

18.07.07. Installation and Maintenance of Exclusion Devices

A. The Contractor shall install nesting exclusion devices to prevent potential establishment or occurrence of a nest during the construction period. The Contractor shall maintain all nesting exclusions devices, including existing ones, throughout the nesting season, February 1st thru August 31st, or until completion of work in an area makes the devices unnecessary. The Contractor shall be responsible for the maintenance, repair, or replacement of exclusion devices until all of the work is complete. The Contractor shall remove and dispose of all exclusion devices when work in the area is complete. Any exclusion devices installed by the District prior to construction start must also be removed and disposed of by the Contractor when completion of work in the area makes the devices unnecessary, and no additional compensation will be provided therefore.

B. Bird exclusion devices shall be installed during the non-nesting season (September 1 through January 31). The Contractor shall obtain approval from the Engineer when installing bird exclusion devices during the nesting season (February 1 through August 31). All exclusion devices shall be inspected daily by the Contractor and weekly by the Contractor Biologist to ensure integrity of the devices, and to prohibit birds from nesting without causing them harm.

18.07.08. Vegetation Management for Nest Prevention

A. The Contractor is hereby notified that all areas to be cleared of vegetation may be suitable nesting habitat for migratory birds. The Contractor shall perform all necessary clearing prior to the nesting season, if at all possible. If clearing must occur during the nesting season, the Contractor shall obtain prior approval from the Engineer. If vegetation must be cut and maintained to prevent birds from nesting, it must be cut to less than 6 inches in height and removed. Cutting and removing vegetation in channels from October 15 through April 15, and as specified in project-specific permit conditions (Appendix C,) shall be limited to hand tools only, unless approved otherwise by the Engineer.

B. The Contractor Biologist is to inspect/monitor gravel areas prior to commencement of the nesting season and as frequently as necessary thereafter to provide deterrence measures and prevent nesting by birds such as killdeer. Bare areas and gravel areas shall be monitored to prevent ground-nesting birds, such as killdeer, from establishing a nest.

C. Removal of vegetation (trees, shrubs, grasses, and herbaceous plants) shall be limited to areas shown on the Drawings designated for vegetation removal unless approval is obtained from the Engineer to remove vegetation from additional areas. No vegetation on adjacent properties shall be trimmed back unnecessarily, including trees and/or shrubs growing near the right of way, which overhang onto the work site. Such overhanging foliage shall be protected and tied back if necessary. Landscaped areas and irrigation systems outside of the construction areas shall be preserved and protected from damage by the Contractor's operation.

D. Wetlands: Vegetation management in wetlands shall conform to the terms and conditions of all applicable permits (e.g., Section 404 permit, Section 401 Water Quality Certification, Streambed Alteration Agreement, etc.).

E. Pre-Established Vegetation Management Areas: Some areas of vegetation removal, clearing, and eradication indicated on the Drawings and in this Article may be established and cleared by the District before the Contractor's starting date as noted in the Notice to Begin Work (or Notice to Proceed). In these areas, the Contractor shall be responsible for the continued clearing and eradication of all resprouts.

18.07.09. Monitoring

A. The Contractor is responsible for ongoing monitoring to assure that migratory birds, their active nests, eggs, and young are not harmed in any way.

B. Prior to the beginning of the nesting season, the Contractor shall inspect all project areas that may be impacted by construction and, at the direction of the Engineer, remove any inactive bird nests, with the exception of raptor nests. During the nesting season, the Contractor shall inspect all project areas that may be impacted by construction, including all vegetation, grounds, and bridge(s), with sufficient frequency as needed, to identify any new and partially-built nests.

C. The Contractor shall be responsible for the removal of any partially-built nests, with the exception of raptor nests. No birds, nests with eggs, or nests with hatchlings shall be disturbed, nor shall raptor nests be removed.

18.07.10. Submittals

A. Submit résumé of qualifications of Contractor Biologist for the Engineer's review. The Contractor Biologist's qualifications must meet the minimum requirements as specified for "Contractor Biologist" listed in Appendix F. The resumé shall be submitted and must be favorably reviewed by the Engineer prior to any commencement of work at the site.

B. Submit migratory bird survey reports to the Engineer within two days upon completion of the survey and at least two days prior to commencement of the project-related activities.

C. Submit to the Engineer, no later than 15th day of each month, a monthly report prepared and signed by the Contractor Biologist that documents the activities of the Contractor including, at a minimum, the status of the installation, maintenance, or removal of any bird exclusion devices or protective buffer zones, and their locations, as well as report the current status of previously documented bird nests.

D. Maintain and, when requested by the Engineer, submit a log, including photo-documentation, weekly documenting the time, date, condition of nests, and any nest prevention actions taken during inspections.

E. Provide product data for nesting exclusion devices, fencing for protective buffer zones, and any shop drawings as deemed appropriate by the Engineer.

F. If Contractor wishes to modify the dimensions of any protective buffer zone, or to modify any bird exclusion device, a written proposal of such modification must be submitted for review and approval by the Engineer. The submittal must contain the Contractor Biologist's written justification for the proposed modification and shall include a description of the anticipated effects on the active nest and nesting birds.

18.07.11. Payment

A. Full compensation for furnishing all labor, materials, tools, equipment and incidentals, and for doing all work in complying with the requirements of this Article shall be included in the prices bid for the various items of work and no additional payment will be made therefore.

18.08. Other Wildlife and Fish Species

A. The Contractor's attention is directed to Article 6.37, "Migratory Birds, Other Wildlife and Fish Species" in the General Provisions of these Specifications.

B. In addition to the Migratory Bird Requirements, above, the Contractor shall comply with all regulatory and permit requirements pertaining to other wildlife and fish species with the potential to occur within the project area.

C. The sensitive species that could be present along the Lower Silver Creek Reaches 4, 5 and 6A project site include, but not limited to: western pond turtle (*Clemmys marmorata*), pallid bat (*Antrozous pallidus*), Townsend's big-eared bat (*Plecotus townsendii*) long-legged myotis (*Myotis volans*), and various species of nesting birds and raptors. The Contractor Biologist shall survey for sensitive plants and animal species in the project vicinity.

D. Animal species surveys shall be done within 30 days of construction start date. For mobile species (e.g. western pond turtle) which may occur on-site during the work period, surveys shall be conducted as close to the start of work as is practical (no more than 7 days prior to start of work). If sensitive animals such as western pond turtles are found, the Contractor Biologist shall remove them to suitable habitat outside of the project limits. Relocating animals shall be performed in a manner consistent with the applicable California Department of Fish and Game permit.

E. If western pond turtles are observed during the pre-construction survey, the Contractor Biologist shall relocate the turtles to an appropriate location upstream of the project site. The turtles will be retained within the Calabazas Creek Watershed. In addition, the construction site will be routinely monitored for the presence of turtles in case other "walkabouts" enter the immediate vicinity of the construction. The Contractor Biologist shall be familiar with western pond turtle biology and shall be responsible for the routine monitoring of the construction site for the presence of Western pond turtles. The Contractor Biologist shall survey the entire project area and an additional 500 feet upstream and downstream of the project area at least once every seven calendar days during construction. The surveys are to be conducted between the hours of 10 am and 3 pm to maximize detection.

F. If bat species are identified by the Contractor Biologist during the pre-construction survey as using the bridge, the District will provide a replacement roosting facility in the form of either a bat house or several bat

boxes, immediately adjacent to the project site to the extent feasible. The District will be responsible for monitoring the replacement roosting facility to document bat utilization.

18.09. Payment

A. Unless noted otherwise, full compensation for furnishing all labor, materials, tools, equipment and incidentals, and for doing all work involved in complying with all requirements under Section 18, “Environmental” shall be considered incidental and included in the prices bid for various items of work and no additional payment will be made therefore.

SECTION 19. QUALITY ASSURANCE REQUIREMENTS

19. Quality Assurance Requirements, Bid Item Nos. 1F, 57D, 83D, and 120D

19.01. Submittal Procedures

A. This Article includes requirements and procedures for preparing and submitting submittals, including shop drawings, product data, samples, testing plans, preconstruction submittals, and other information required by the Contract Documents.

19.01.01. General Requirements

A. Submittals shall be in accordance with Article 9.02, "Submittals to be Furnished by the Contractor" of the Standard Provisions of these Specifications unless otherwise modified herein.

B. Master Submittal List: Within 30 days after the Notice to Begin Work, the Contractor shall submit a master submittal list (6 paper and 6 electronic copies on diskette or CD) to the Engineer for review and approval. This list shall be in Microsoft Excel spreadsheet format and identify all originally planned submittals. The purpose of this list is to assist planning for submittal creation and review. Items on this list shall be arranged in the same order as these Specifications and shall include as a minimum the following information:

1. Item number.

2. Reference specification section number and paragraph.

3. Product, material, or description.

4. Original preparer of the submittal, as designated by the Contractor. Name, address, telephone number, and fax number of each preparer shall be appended to this master submittal list.

5. Estimated date for submission to the Engineer by the Contractor.

C. The Contractor shall identify in the master submittal list the submittals that may require long lead times for manufacturing and/or delivery and that must be submitted early to the Engineer for review.

D. Immediate Submittals

The Contractor shall submit the submittals listed below within 5 working days after the first chargeable day of the Contract, as specified in the Notice to Begin Work (Notice to Proceed). See Article 11.07, "Liquidated Damages" of these Specifications for assessment for delay in submitting these submittals.

1. Detailed Schedule of Work

2. Stormwater Pollution Prevention Plan
3. Dewatering Plan
4. Resume of qualifications of Water Quality Monitoring Contractor, if applicable to the Contractor's operations.
5. Traffic Control Plan
6. Safety and Health Plan
7. Proposed Excavation and Recycling Plan
8. Resume of qualifications of Contractor Independent Surveying Firm
9. Resume of qualifications for Contractor Biologist

E. Make other submittals promptly in accordance with the approved project progress schedule, and in such sequence as to cause no delay in the work. The time allowed by the Contractor for submittal review shall also provide sufficient time for disapproval and resubmission.

F. The Contractor shall make a complete and acceptable submittal per Article 9.02, "Submittals to be Furnished by the Contractor" of these Specifications to the Engineer at least by the second submission. The cost associated with re-review of submittal due to Contractor's failure to comply with submittal requirements shall be borne by the Contractor per Standard Provision Article 9.02 of these Specifications. The multiplier to be applied to the actual wages of the Engineer and/or Engineer's consultant will be in compliance with the current District multiplier in effect at the time the Engineer's and/or the Engineer's consultants incur said labor costs. For informational purposes, the multiplier in effect at the time of project bid is 2.41.

The multiplier, provided by the Budget Office each fiscal year, includes the benefits and general fund overhead rates.

G. The number of copies of submittals described here supersedes the submittal copy requirements described in Standard Provisions Articles 9.02, "Submittals to be Furnished by the Contractor" and 10.03, "Product Data Samples" of these Specifications. The number of copies required is as follows:

1. Shop drawings and product data: Sufficient copies to allow 5 copies to be retained by the Engineer plus 1 copy to be returned to the Contractor for Contractor's use.

2. Samples: Sufficient numbers to allow 2 samples of all structural and architectural products involving color, finish, texture, or the like, and 1 sample of other products to be retained by the Engineer plus 1 sample to be returned to the Contractor for Contractor's use.

3. It shall be the Contractor's responsibility to copy and/or conform reviewed submittals in sufficient numbers for its files, subcontractors, and vendors.

4. For up to 20 selected submittals, the Engineer will request additional copies of submittal for use by the Engineer and District—up to 10 copies in total. The Contractor shall provide these additional copies.

19.01.02. Shop Drawings, Product Data, and Samples

A. Shop Drawings

1. Shop drawings include, but are not necessarily limited to, custom-prepared data such as fabrication on erection/installation (working) drawings, scheduled information, setting diagrams, actual shop work manufacturing instructions, custom templates, special wiring diagrams, coordination drawings, individual system or equipment inspection and test reports including performance curves and certifications, as applicable to the work.

2. Submittal of shop drawings by simply annotating copies of the Contract Drawings is subject to rejection.

B. Product Data

1. Product data as specified in individual Sections or Articles, include, but are not necessarily limited to, standard prepared data for manufactured products (sometimes referred to as catalog data or “cuts”), such as the manufacturer’s product specification and installation instructions, availability of colors and patterns, manufacturer’s printed statements of compliance and applicability, roughing-in diagrams and templates, product photographs, standard wiring diagrams, printed performance curves and operational-range diagrams, production or quality control inspection and test reports and certifications, mill reports, product operating and maintenance instructions and recommended spare parts listing and printed product warranties, as applicable to the work.

C. Samples

1. Samples specified in individual Sections or Articles, include, but are not necessarily limited to, physical examples of the work such as sections of manufactured or fabricated work, small cuts or containers of materials, complete units of repetitively-used products, color/texture/pattern swatches and range sets, specimens of coordination of visual effect, graphic symbols and units of work to be used by the Engineer or others for independent inspection and testing, as applicable to the work.

D. Concrete Reinforcement Submittals

1. Submittals for concrete reinforcement shall not simply be annotated copies of the Contract Drawings. New scale drawings shall be prepared showing plans, all vertical structure elevations, sections, and details as

required to clearly delineate the reinforcing to be furnished and installed. Submittals shall show and tabulate reinforcement dimensions, sizes, grades, shapes, splices, laps, splice locations, dowel lengths, and all similar information needed for construction, material take-offs, and Engineer's review to determine compliance with the structural design. Submittals shall show reinforcement dimensioning and placement which reflects the Contractor's intended and approved concrete placement sequence.

E. Electrical and Irrigation Controller Equipment Submittals

1. Submittals as described herein shall be provided for all electrical and instrumentation equipment and systems furnished as part of the Irrigation Controllers and Related products and systems specified in these Specifications. These submittals shall include, but not necessarily be limited to, the following:

a. Equipment list tabulating all components furnished followed by the manufacturer's name, manufacturer's model number, and a cross reference to its location on the submittals.

b. Drawings and descriptive data and brochures of each item of equipment. Electrical characteristics and requirements, enclosure types, manufacturer and model number shall be included. Sheets or drawings showing more than the particular item under consideration shall have crossed out all but the description of the item for which review is requested.

c. Schematics and connection diagrams. A manufacturer's standard connection diagram or schematic showing more than one scheme of connection will not be accepted, unless it is clearly marked to show the intended work-specific connections. Terminal numbers shall be included. A written operation theory shall be included for all complex control schemes.

19.02. Quality Control

A. This Article includes quality control requirements and procedures for materials, products, equipment, and workmanship; inspection procedures and limitations; sampling and testing of materials; and Contractor's quality assurance/quality control program.

19.02.01. Materials, Product, Equipment, and Workmanship

A. All materials, products, and equipment shall be new, of the specified quality, and free of defects. Where samples have been submitted, the materials, products, and equipment incorporated into the work shall be equal to the samples that have been approved. Should materials, products, and equipment required by the

work not be specified or described on the Drawings, the Contractor shall provide materials, products, and equipment of a high generally accepted quality standards that are comparable to the work and meet the identifiable needs of the work.

B. Materials, products, equipment, and work not conforming to the requirements of the Contract Documents shall be considered defective and will be subject to rejection. Defective materials, products, equipment and work, whether in place or not, shall be removed immediately from the site by the Contractor, at no additional cost to the District.

C. Perform and complete work in a careful, thorough manner.

1. The Contractor shall report apparent errors, conflicts, discrepancies, or omissions in the Contract Documents to the Engineer and request instructions before proceeding with the work.

2. Engineer will issue written clarification or interpretation of Contract Document requirements in response to Contractor's requests and other sources of information.

D. Materials, products, and equipment that are specified to require testing and inspection at the point of origin shall receive and pass such testing and inspection prior to being shipped to the project site.

19.02.02. Inspection

A. All work, materials, products, equipment, and functionality are subject to testing by the Engineer. Inspection of the work or receipt of payment shall not relieve the Contractor of the obligation to fulfill all conditions of the Contract, and improper work shall be subject to rejection. Work and materials, products, and equipment not complying with the Contract Documents shall be corrected or removed and replaced with conforming work, materials, products, and equipment at no additional cost to the District.

B. Inspection does not waive or alter the requirements or provisions of the Contract Documents.

C. Inspection does not include the Contractor's means, methods, techniques, sequences, or procedures for construction.

19.02.03. Sampling of Materials

A. The Contractor shall furnish samples of materials as specified and as requested by the Engineer at no additional cost to the District. Samples will be obtained and tested whenever necessary to determine the quality of the material and compliance with the Contract Documents.

B. The Contractor shall assist the Engineer, District staff, regulatory agency personnel and third parties in collecting or providing samples.

C. The Contractor shall not use materials specified to be tested in the work until such testing indicates satisfactory compliance with the Contract Documents.

19.02.04. Testing Services

A. Prior to the Contractor performing any test that require the services of an independent laboratory, the Contractor must first obtain written approval from the Engineer to utilize such independent commercial testing firm. Such laboratory is to be listed in the Contractor's QA/QC Program as detailed herein. The testing firm's laboratory shall be staffed with experienced technicians, properly equipped and fully qualified to perform the tests in accordance with the specified standards. Any and all personnel that are expected to perform such tests must be listed in the Contractor's QA/QC Program with resumes detailing each individual's experience.

B. The Contractor shall pay all costs for these testing services.

C. The Contractor's independent testing laboratory shall be accredited by the American Association of State Highway and Transportation Officials (AASHTO) for the tests they will perform and as appropriate to the construction work being performed. The Contractor's laboratory shall also be AASHTO accredited in: ASTM C1077, "Practice for Laboratories Testing Concrete and Concrete Aggregates for Use in Construction and Criteria for Laboratory Evaluation"; ASTM D3740, "Practice for Evaluation of Agencies Engaged in Testing and/or Inspection of Soil and Rock as Used in Engineering Design/Construction"; and ASTM D3666, "Specifications for Minimum Requirements for Agencies Testing and Inspecting Bituminous Paving Materials."

D. The Engineer shall have the right to inspect work performed by the independent testing laboratory both at the Project and at the laboratory. This shall include inspection of the independent testing laboratory's internal quality assurance records (quality assurance manual, equipment calibrations, proficiency sample performance, etc.).

E. Testing Services furnished by Contractor: Unless otherwise specified, and in addition to all other specified testing requirements, the Contractor shall obtain independent testing services to complete the following testing at no additional cost to the District. Test reports shall be submitted in accordance with Article 9.02, "Submittals to be Furnished by Contractor" and Article 19.01, "Submittal Procedures" of these Specifications. Testing shall be completed in accordance with the specified standards. Where no standard is specified, testing shall be completed in accordance with the applicable ASTM and Caltrans standards.

1. Concrete materials and mix designs.

2. Expansion and adhesive anchorage testing.

3. Classification tests for embankment, fill, backfill, and aggregate base being used (or proposed for use) in the work.

4. Quality control testing of all precast concrete.

5. All other tests and engineering data required for Engineer's review of materials and equipment proposed to be used in the work.

6. Other testing as required in the Contract Documents.

F. Transmittal of Test Reports: Written reports of tests and engineering data furnished by Contractor for Engineer's review of materials and equipment proposed to be used in the work shall be submitted as specified in Article 19.01, "Submittal Procedures" of these Specifications.

G. The testing firm retained by Contractor for material testing shall furnish five copies of written report of each test. Three copies of each test report will be transmitted to the Engineer within three Work Days after each test is completed. Each report for each type of test shall be consecutively numbered.

19.02.05. Testing by District

A. Testing services provided by District, if any, are for the sole benefit of District. The District will obtain independent testing services to perform routine testing of materials and all costs therefore will be borne by the District at no cost to the Contractor except that the costs of any retest resulting from unsatisfactory test results shall be backcharged to the Contractor. Testing will include:

1. Routine tests as determined by the Engineer to confirm compliance with the Contract Documents.

2. Soil moisture content and in-place soil compaction.

3. Concrete air content, slump, compressive strength, shrinkage, and other properties.

4. Coating thicknesses.

5. Water Quality.

B. The Engineer will furnish the Contractor one copy of each field and laboratory QA/QC test that is performed by the District.

19.02.06. Plumbing and Piping Quality

A. The Contractor shall consult with industry and manufacturer's representatives for all piping materials being used in the work. The purpose of this consultation is to ensure that Contractor's personnel are fully trained, knowledgeable, possess written instructions on proper assembly, and have all of the recommended tools for quality work. Consultation shall also include discussions between industry and manufacturer's representatives and Contractor management and construction staff on the causes of past plumbing and piping failures and problems and methods of avoidance. The Contractor shall provide training for its forces as required to produce consistent, high quality work, without failed tests and warranty problems.

19.02.07. Right of Rejection

A. In accordance with Standard Provisions Article 9.01, "Authority of Engineer" of these Specifications the Engineer shall have the right at all times and places to reject any articles or materials to be furnished hereunder which, in any respect, fail to meet the requirements of the Contract Documents, regardless of whether the defects in such articles or materials are detected at the point of manufacture or after completion of the work at the Site.

B. If the Contractor fails to promptly remove and replace rejected work, the Engineer may, after 7 Days notice, terminate the Contractor's right to proceed with the affected work. The Engineer may remove and replace the affected work with District resources. The Engineer will issue a backcharge to the Contractor covering the District's cost for performing the work in accordance with Standard Provisions Article 9.08, "Defective and Unauthorized Works" of these Specifications.

19.02.08. Contractor's Quality Assurance/Quality Control Requirements

A. The Contractor shall establish and execute a Quality Assurance/Quality Control (QA/QC) program for the services that are being procured from the Contractor. The program shall provide the Contractor with adequate measures for verification of and conformance to defined Contract requirements by the contractor's personnel and lower-tier subcontractors (including fabricators, suppliers, and sub-subcontractors). This program shall be described in a Plan responsive to this Section.

B. Within the submittal requirements under Article 19.01, the Contractor shall furnish the Engineer a project specific QA/QC Plan. The QA/QC Plan shall contain a comprehensive account of Contractor's QA/QC procedures as applicable to this work. The detailed requirements for this QA/QC Plan are delineated in the following paragraphs. No payments will be made to the Contractor until the QA/QC Plan is fully accepted by the Engineer.

C. The QA/QC Plan shall describe and define the personnel requirements described herein. The Contractor shall provide personnel with assigned QA/QC functions reporting to a Field QA/QC Representative. The Field QA/QC Representative shall report to a senior manager of the Contractor and shall have no supervisory or managerial responsibility over the work force. Persons performing QA/QC functions shall have sufficient qualifications and organizational freedom to identify quality problems and to initiate and recommend solutions. The Field QA/QC Representative(s) shall be on-site as often as necessary (but not less than the daily hours specified in the Contract Documents) to remedy and demonstrate that work is being performed properly and to make multiple observations of all work in progress. The QA/QC Plan shall include a statement by the Contractor's senior manager designating the Field QA/QC Representative to direct cessation or removal and replacement of defective work.

D. The Contractor's QA/QC program shall ensure the achievement of adequate quality throughout all applicable areas of the Contract. The QA/QC Plan shall describe the program and include procedures, work instructions and records. In addition, the Plan shall describe methods relating to areas that require special testing and procedures as noted in the Specifications.

E. Identification and Control of Items and Materials: Procedures to ensure that items or materials that have been accepted at the site are properly used and installed shall be described in the QA/QC Plan. The procedures shall provide for proper identification and storage, and prevent the use of incorrect or defective materials.

F. Inspection and Tests: The Contractor shall have written procedures defining a program for control of inspections performed and these procedures shall be described in the QA/QC Plan.

1. Inspections and tests shall be performed and documented by qualified individuals. At a minimum, "qualified" shall mean having performed similar QA/QC functions on similar type projects. Records of personnel experience, training and qualifications shall be maintained and made available for review by the Engineer upon request.

2. The Contractor shall maintain and provide to the Engineer, within two working days of completion of each inspection and test, adequate records of all such inspections and tests. Inspection and test results shall be documented and evaluated to ensure that requirements have been satisfied.

3. The Contractor is to immediately inform the Engineer of all test results obtained in the field. All such information is to be shared with the Engineer at the time of each inspection and test. The Contractor is required to submit a Daily QC Report (as detailed below in Paragraph No.

4b) at the end of each working day or no later than prior to the beginning of the next working day.

4. Procedures shall include:

   a. Specific instructions defining procedures for observing all work in process and comparing this work with the Contract requirements (organized by specification section).

   b. Maintaining and providing Daily QC Reports. Such reports shall, at a minimum, include the following:
      1. Item(s) inspected
      2. Quality characteristics in compliance
      3. Quality characteristics not in compliance
      4. Corrective/remedial actions taken
      5. Statement of certification
      6. Field QC Representative's signature

   c. Specific instructions for recording all observations and requirements for demonstrating through the reports that the work observed was in compliance or a deficiency was noted and action to be taken.

   d. Procedures to preclude the covering of deficient or rejected work.

   e. Procedures for halting or rejecting work.

   f. Procedures for resolution of differences between the Field QA/QC Representative(s) and the production representative(s).

5. The QA/QC Plan shall identify all contractual hold/inspection points as well as any Contractor imposed hold/inspections points.

6. The QA/QC Plan shall include procedures to provide verification and control of all testing provided by Contractor including:

   a. Maintaining and providing to the Engineer Daily Testing Records. Such records shall, at a minimum, contain the following:

      (1) Date and time of test
      (2) Item(s) tested
      (3) Quality characteristics in compliance
      (4) Statement of correctness & certification
      (5) Quality characteristics not in compliance
      (6) Corrective/remedial actions taken
      (7) Field QC Representative's signature

b. Such records are to be completed and submitted to the Engineer at the end of each working day but no later than prior to the beginning of the following workday.

c. Individual test records will contain the following information:

(1) Date and time of test
(2) Item tested – item number and description
(3) Test results
(4) Test designation
(5) Test work sheet including location sample was obtained
(6) Acceptance or rejection
(7) Date sample was obtained
(8) Retest information, if applicable
(9) Control requirements
(10) Tester signature
(11) Initials of Contractor's staff completing this testing

d. Providing for location maps for all tests performed or location of work covered by the tests.

e. Maintaining copies of all test results.

f. Ensuring Engineer receives independent copy of all tests.

g. Ensuring testing lab(s) are functioning independently and in accordance with the specifications.

h. Ensuring re-tests are properly taken and documented.

G. Control of Measuring and Test Equipment: Measuring and/or testing instruments shall be adequately maintained, calibrated and adjusted to maintain accuracy within prescribed limits. Calibration shall be performed at specified periods against valid standards traceable to nationally recognized standards and documented.

H. Supplier Quality Assurance: The QA/QC Plan shall include procedures to ensure that procured products and services conform to the requirements of the Specifications. Requirements of these procedures shall be applied, as appropriate, to lower-tier suppliers and/or subcontractors.

I. Deficient and Nonconforming Work and Corrective Action: The QA/QC Plan shall include procedures for handling of Deficiencies and Non-conformances. Deficiencies and Non-conformances are defined as documentation, drawings, material, equipment or work not conforming to the contractually specified requirements or procedures. The procedure shall prevent Non-conformances by identification, documentation, evaluation, separation, disposition and corrective

action to prevent recurrence. Conditions having adverse effects on quality shall be promptly identified and reported to the Contractor's senior level management and the Engineer. The cause of conditions adverse to quality shall be determined and documented and measures implemented to prevent recurrence. In addition, at a minimum, this procedure shall address:

1. Personnel responsible for identifying deficient and non-complying items within the work.

2. How and by whom deficient and non-compliant items are documented "in the field."
3. The personnel and process utilized for logging deficient and non-compliant work at the end of each day onto a Deficiency Log.

4. Tracking processes and tracking documentation for deficient and non-compliant items.

5. Personnel responsible for achieving resolution of outstanding deficiencies.

6. Once resolved, how are the resolutions documented and by whom.

J. Special Processes and Personnel Qualifications

1. The QA/QC Plan shall include detailed procedures for the performance and control of special process (e.g. welding, soldering, heat treating, cleaning, plating, nondestructive examination, etc.).

2. Personnel performing special process tasks shall have the experience, training and certifications commensurate with the scope, complexity, or nature of the activity. The Engineer shall approve them before the start of work on the Project.

K. Audits: The contractor's QA/QC program shall provide for documented audits to verify that QA/QC procedures are being fully implemented by the Contractor as well as its subcontractors and supplies. Audit records shall be made available to the Engineer upon request.

L. Documented Control/Quality Records:

1. The Contractor shall establish methods for control of Contract Documents, which describe how Drawings and Specifications are received and distributed to assure the correct issue of the document being used. The methods shall also describe how as-built data are documented and furnished to the Engineer.

2. The Contractor shall maintain evidence of activities affecting quality, including operating logs, records of inspections and tests, audit reports, material analyses, personnel qualification and certification records, procedures, and document review records.

3. Quality records shall be maintained in a manner that provides for timely retrieval, and traceability. Quality records shall be protected from deterioration, damage, and destruction.

4. The Contractor shall provide a list with specific records as specified in the Contract Documents, which will be furnished to the Engineer at the completion of activities.

M. Acceptance of QA/QC Plan: Engineer's review and acceptance of the Contractor's QA/QC Plan shall not relieve the Contractor from any of its obligations for the performance of the work. The Contractor's QA/QC staffing is subject to the Engineer's review and continued acceptance. The Engineer, at its sole option, without cause, may direct the Contractor to remove and replace the Field QA/QC Representative. No work covered by the QA/QC Plan shall start until Engineer's acceptance of Contractor's QA/QC Plan has been obtained.

N. Engineer may perform independent quality assurance audits to verify that actions specified in Contractor's QA/QC Plan have been implemented. No Engineer audit finding or report shall in any way relieve Contractor from any requirements of this Contract.

19.03. Product Requirements

A. This Article includes general product requirements and requirements for delivery, storage, packing, loading, unloading, transportation, protection, and selection of materials and equipment. Additional specific requirements for delivery, handling, protection, loading, and unloading may be specified with the technical specification for materials and equipment.

B. Contractor's attention is directed to Section 10 "Control of Materials and Installed Equipment" of these Specifications.

C. Contractor's attention is directed to Article 10.10, "Equal, Sole or Single Source, and Substitution" of these Specifications.

19.03.01. General Product Requirements

A. Only new materials and equipment shall be incorporated into the work. All materials and equipment furnished by Contractor shall be subject to the inspection and approval of the Engineer. No material or equipment shall be delivered to the work without prior approval of submittals by the Engineer.

B. Provide products by same manufacturer when products are of similar nature, unless otherwise specified. Provide identical products when products are required in quantity. Provide products with interchangeable parts whenever possible.

C. Require each equipment manufacturer to have maintenance facilities meeting the following requirements:

1. Minimum 3 years operational experience.
2. Location in continental United States.
3. Equipment and tools capable of making repairs.
4. Staff qualified to make repairs.
5. Inventory of maintenance spare parts.

19.03.02. Transportation and Delivery

A. The Contractor shall:

1. Transport and handle items in accordance with manufacturer's instructions.

2. Schedule delivery to reduce long-term on-site storage prior to installation and/or operation. Under no circumstances shall equipment be delivered to the site more than one month prior to installation without written authorization from the Engineer.

3. Coordinate delivery with installation to ensure minimum holding time for items that are hazardous, flammable, easily damaged, or sensitive to deterioration.

4. Deliver products to the site in manufacturer's original sealed containers or other packing systems, complete with Material Safety Data Sheets (MSDS) and instructions for handling, storing, unpacking, protecting, and installing.

B. The Contractor may store his/her equipment and materials only in those locations approved by the Engineer. The Contractor will be responsible for maintaining and restoring any areas as required by the Engineer.

C. All items delivered to the site shall be unloaded and placed in a manner which will not: (1) hamper the Contractor's normal construction operation or those of subcontractors and other contractors; (2) interfere with the flow of necessary traffic; and (3) interfere with District's normal operations and maintenance activities (4) interfere with channel flow. In addition, the Contractor shall:

1. Provide necessary equipment and personnel to unload all items delivered to the site.

2. Promptly inspect shipment to assure that products comply with requirements, quantities are correct and items are undamaged. For items furnished by others (i.e., District, other Contractors), perform inspection in the presence of the Engineer. Notify Engineer verbally, and in writing, of any problems.

19.03.03. Storage and Protection

A. Store and protect products in accordance with the manufacturer's instructions, with seals and labels intact and legible. Storage instructions shall be studied by the Contractor and reviewed with the Engineer. Instructions shall be carefully followed by the Contractor. Arrange storage to permit ready access for inspection by the Engineer.

B. Store loose granular materials on solid flat surfaces in a well-drained area. Prevent mixing with foreign matter.

C. Cement, lime, and similar moisture sensitive materials shall be stored under a roof and off the ground and shall be kept completely dry at all times. All structural, miscellaneous, and reinforcing steel shall be stored off the ground or otherwise to prevent accumulations of dirt or grease and in a position to prevent accumulations of standing water and to minimize rusting. Beams shall be stored with the webs vertical. Precast concrete shall be handled and stored in a manner to prevent accumulations of dirt, standing water, staining, chipping or cracking. Brick, block, and similar masonry products shall be handled and stored in a manner to reduce breakage, cracking, and spalling to a minimum.

D. Material and equipment storage areas shall be suitably fenced and secured, if necessary, to protect the public, workers, District staff, and the materials and equipment from damage or theft.

E. Unless otherwise designated in the Contract Documents, locations and arrangements for storage sites for materials and equipment outside the District's property lines, limits of work, or right-of-way, shall be selected and maintained by the Contractor at Contractor's expense. Full compensation for furnishing such storage sites as may be necessary or required by the Contractor shall be considered as included in bid price and no additional compensation shall be allowed therefore. District shall be specifically exempted in any agreement from any liability incurred from the use of private property for construction purposes. Use of portions of the District's area at the site for materials and equipment storage shall be permitted only upon the approval of the Engineer.

F. The storage and handling of potential pollutants and hazardous materials, including, but not necessarily limited to, gasoline, diesel, oils, paint, and solvents, shall be in accordance with all local, State, and Federal laws and other requirements. Temporary special storage enclosures, double walled tanks, berms, or other protective facilities shall be provided as required by law. All hazardous materials shall be stored and handled in strict accordance with the

Material Safety Data Sheets for each product. A copy of each Material Safety Data Sheet shall be submitted to the Engineer at the time of delivery of the products to the project site. See Article 18.01,"Water Quality" of these Specifications for Storm Water Pollution Prevention requirements.

G. All materials and equipment which, in the opinion of the Engineer, have become so damaged as to be unfit for the use intended or specified, shall be promptly removed from the site of the work, and the Contractor shall receive no compensation for the material or equipment so removed or its removal costs.

H. Handling and storage of plants and seed delivered to the site and accepted by the Contractor become the responsibility of the Contractor. The Contractor shall retain all standard containers bearing original labels legibly showing quantity, analysis, and genus/species. Protect containers from sun during summer months and temperatures above 80F. Keep plants that cannot be planted immediately upon delivery in the shade, well protected and well watered. The Contractor shall handle and store all seeds and container plants in such a manner as to protect them from animals, weather (drought, flooding, frosts, wind, etc.) vandalism, toxic irrigation water and any other conditions that may damage or reduce the viability of effectiveness of the plant material.

19.04. Payment

A. Full compensation for furnishing all labor, materials, tools, equipment and incidentals and for doing all work involved in complying with all requirements under Section 19, "Quality Assurance Requirements", as specified in these Specifications, and as directed by the Engineer, shall be included in the lump sum price bid for QUALITY ASSURANCE REQUIREMENTS, Bid Item No. 1F, and Bid Additive Item Nos. 57D, 83D, and 120D if/when included in the awarded project by the District.

SECTION 20. PAYMENT PROCEDURES

20.01. Schedule of Bid Items

20.01.01. General Requirements

A. For the schedule of Bid Items, refer to the:

The Lower Silver Creek Flood Protection and Creek Restoration Project,
Interstate 680 to Moss Point Drive (Reaches 4, 5 & 6A)
Project No. 40264008 Contract No. C0564
Bid Documents with Federal Requirements

B. Unless otherwise indicated, all Bid Items include labor, materials, tool, equipment, and incidentals to complete the items in accordance with the Drawings, as specified in these Specifications, and as directed by the Engineer.

C. No separate payment will be made for any item that is shown on the Drawings and/or specified in these Specifications but not specifically set forth in Schedule of Bid Items, and all cost therefore shall be included in the prices named in the Schedule of Bid Items for the various appurtenant items of work.

D. Where there is an overlap in the work paid for under different Bid Items, the work will be paid for only once under the appropriate Bid Item(s), as determined by the Engineer.

20.01.02. Not Used

20.02. Progress Payments and Schedule of Values

A. This Article includes requirements for the preparation, format, and submission of the Schedule of Values.

B. Progress payments will not be made until the Schedule of Values has received favorable review by the Engineer.

C. No progress payment made to the Contractor or its sureties will constitute a waiver of the liquidated damage under Article 7.06, “Liquidated Damages” of these Specifications.

20.02.01. Preparation

A. Prepare preliminary and final Schedule of Values identifying costs of all Bid Items. For lump sum Bid Items, include costs of all major components of work under that Bid Item. No component of lump sum Bid Items shall have a duration exceeding 15 days except concrete curing, submittal review, equipment fabrication, and deliveries, or a value greater than $50,000.

B. Assign prices to major components of lump sum Bid Items totaling the Bid Item price. Base prices on costs associated with scheduled activities based on the Progress Schedule for each major component of work. Each Bid Item and each component of lump sum Bid Items shall include a directly proportional amount of the Contractor's overhead and profit. The Contractor's overhead and profit shall be completely distributed among all Bid Items of work, including components of lump sum Bid Items. Provide additional cost documentation to the Engineer when requested so that values can be verified.

C. Submit the preliminary Schedule of Values within 14 days from the date of the Notice to Begin Work and revise to incorporate Engineer's comments until a final Schedule of Values is agreed upon. This information shall be used in the preparation of the Progress Schedule under Section 11 "Work and Schedule of Work" of these Specifications.

D. For all construction change order authorizations, provide change order authorization breakdown to append to the final Schedule of Values items for at least the following components: (a) site work, (b) structure, (c) materials, (d) mechanical, (e) utilities, (f) landscaping and revegetation, (g) demolition, (h) submittals, operation and maintenance manuals, and training; and (i) testing and startup. Provide additional cost documentation to the Engineer when requested.

E. The Contractor shall not change the final approved Schedule of Values without the approval of the Engineer. The Schedule of Values has a one-to-one direct relationship to the list of activities on the Contractor's Progress Schedule. Additions or deletions of activities on the Contractor's Progress Schedule will require an addition or deletion of line item value to the Schedule of Values. The Contractor must submit requested changes to the approved Schedule of Values to the Engineer for approval.

F. The Contractor shall list and maintain all values for items of equipment that will be submitted for material on-site payment separately on the Schedule of Values and on the Progress Schedule. These material items will not be "progressed" as a part of the physical progress assessment.

20.02.02. Submittals

A. Submit corrected Schedule of Values within 10 days upon receipt of reviewed Schedule of Values comments, but no later than 10 days prior to anticipated submittal of the first Application for Payment.

20.02.03. Preliminary Schedule of Values

A. Table 20.02.03.A below is an acceptable form (not complete, example only) for the preliminary Schedule of Values.

B. The preliminary and final Schedule of Values shall be prepared into a Microsoft Excel format onto 8½-inch by 11-inch paper. Identify the schedule with:

1. District's Name, Project Name and Project No.
2. Name and address of Contractor.
3. Date of submission.

20.03. Cost Summaries

If required by the Engineer, the Contractor shall:

A. Prepare a "Summary of Cost Information" on each major item of work listed in the Schedule of Values. Identify the value of work completed for both the payment period and job to date.

B. Prepare a "Cash Flow Summary," and a corresponding "Cash Flow 'S' Curve," indicating the total dollar amount of work planned for each month of the Project. Equate sum of monthly amounts to the Total Bid Price. Update the Cash Flow Summary and Cash Flow "S" Curve every 60 days or as directed by the Engineer.

20.04. Partial Payment—Inclusion of Materials On-Site

A. Payments will be made by the District to the Contractor for materials and equipment furnished and delivered to the site by the Contractor and not yet incorporated into the work subject to the following requirements:

1. Materials, as used herein, shall be considered to be those items that are fabricated and manufactured goods and equipment. Only those materials for which the Contractor can transfer clear title to the District will be qualified for partial payment. Temporary construction materials (e.g., shoring) do not qualify for partial payment. Materials that are not on site will not be considered for payment.

2. Only materials that have received favorable review of submittals will qualify for consideration.

3. Eligible materials must be delivered, properly stored, protected, and maintained in a manner favorably reviewed by the Engineer at the site.

4. Only the Contractor's actual net cost for materials may be paid prior to inclusion in the work. The Contractor's actual net cost for the materials must be supported by furnished invoices of suppliers, and other documentation requested by the Engineer.

5. Materials delivered to the site less than 30 days prior to their scheduled incorporation shall not qualify for partial payment consideration.

6. Final payment shall be made only for materials actually incorporated into the work. Upon acceptance of the work, all materials remaining for which advance payments had been made shall revert to the Contractor, unless otherwise agreed, and partial payments made for these items shall be deducted from the final payment for the work.

7. Partial payments for materials on site shall not be deemed to be final payment for the material nor relieve the Contractor of its obligations under the Contract.

8. Partial payments for materials on site shall be subject to retention per Article 8.03, "Progress Payment", of these Specifications.

9. See Article 20.05, "Applications for Payment" of these Specifications, for additional documentation required for partial payment for materials on site.

20.05. Applications for Payment

A. This includes procedures for the preparation and submission of monthly Applications for Payment.

20.05.01. General

A. Applications for payment shall be based upon actual progress as measured on the Progress Schedule developed under Section 11 "Work and Schedule of Work" and its approved assignment of the Schedule of Values developed under Article 20.02, "Progress Payments and Schedule of Values" of these Specifications.

B. Fill in the information required on this form.

C. Provide a list of materials on site but not yet incorporated into the work that are sought for partial payment and supporting documentation.

D. When change order authorizations are executed, add each such authorization to the applicable Bid Items, or separately at end of listing of Schedule of Values items, as appropriate.

   1. Identify the Change Order Authorization by number and description.
   2. Provide the value of Change Order Authorization in appropriate column.

E. After completing, submit Application for Payment.

F. Engineer will review application for accuracy. When accurate, Engineer will transmit application for processing of payment. Engineer will return inaccurate and/or incomplete Applications for Payment with comments for Contractor action.

G. Each Application for Payment shall be transmitted under the signature of the responsible officer of the Contractor.

20.05.02. Substantiating Data

A. Provide substantiating data with cover letter identifying:

1. Project Name and Project No.

2. Application number and date.

3. Detailed list of enclosures.

4. For all stored materials (fabricated and manufactured goods and equipment only) on site, but not yet included in the work, with item number and identification on the application, Contractor shall complete the District form "Request for Payment for Materials on Hand." The "Project Inspector" described on this form shall be the Engineer. The Contractor shall provide a description of each specific material, quantity, value, submittal review status, substantiating evidence of purchase and cost, complete the affidavit, and physically separate and identify the material as property of the District. References to off-site storage on District form "Request for Payment for Materials on Hand" are not applicable to this work.

5. Submit "certified" payroll.

6. Description of record drawing completion status.

20.05.03. Submittals

A. Submit 5 copies of Application for Payment and substantiating data with cover letter.

20.06. Payment

A. Unless noted otherwise, full compensation for furnishing all labor, materials, tools, equipment and incidentals, and for doing all work involved in complying with all requirements under Section 20, "Payment Procedures" shall be considered incidental and included in the prices bid for various items of work and no additional payment will be made therefore.

B. The provisions of Article 8.04 "Final Payment," and 8.06 "Acceptance of Final Payment Constitutes Release," shall be applicable to each separate stage of construction, Stage 1 and Stage 2, and defined n Article 21.01.06 "Acceptance of Work."

TABLE 20.02.03.A1 Preliminary Schedule of Values – Base Bid (BB)		
Item No.	**Description of Item**	**Value ($)**
1A	**Bid Item No. 1A—COMPLIANCE WITH NPDES GENERAL PERMIT (BB)**	
1A.1	Work under Section __.	
1A.2	Work under Section __.	
…	…	
1B	**Bid Item No. 1B—DISPUTE REVIEW BOARD**	
1B.1	Work under Section __.	
1B.2	Work under Section __.	
…	…	
1C	**Bid Item No. 1C—SITE REVIEW AND MONITORING OF PROJECT LIMITS AND VICINITY (BB)**	
1C.1	Work under Section __.	
1C.2	Work under Section __.	
…	…	
1D	**Bid Item No. 1D—NOISE AND VIBRATION MONITORING (BB)**	
1D.1	Work under Section __.	
1D.2	Work under Section __.	
…	…	
1E	**Bid Item No. 1E—BUILDING SERVICE MODIFICATIONS AT CAPITOL EXPWY.**	
1E.1	Work under Section __.	
1E.2	Work under Section __.	
…	…	
1F	**Bid Item No. 1F—QUALITY ASSURANCE REQUIREMENTS (BB)**	
1F.1	Work under Section __.	
1F.2	Work under Section __.	
…	…	
2	**Bid Item No. 2—MOBILIZATION (BB)**	
2.1	Work under Section __.	
2.2	Work under Section __.	
…	…	
3	**Bid Item No. 3—CLEARING AND GRUBBING (BB)**	
3.1	Work under Section __.	
3.2	Work under Section __.	
…	…	
4	**Bid Item No. 4—CONCRETE REMOVAL (BB)**	
4.1	Work under Section __.	
4.2	Work under Section __.	
…	…	
5	**Bid Item No. 5—CONCRETE STRUCTURES REMOVAL (BB)**	
5.1	Work under Section __.	
5.2	Work under Section __.	
…	…	

TABLE 20.02.03.A1 Preliminary Schedule of Values – Base Bid (BB)		
Item No.	**Description of Item**	**Value ($)**
10	**Bid Item No. 10—ROADWAY RESTORATION – JACKSON AVE. & CAPITOL EXPWY. (BB)**	
10.1	Work under Section __.	
10.2	Work under Section __.	
…	…	
19	**Bid Item No. 19—STORM DRAIN OUTFALL MODIFICATIONS (BB)**	
19.1	Work under Section __.	
19.2	Work under Section __.	
…	…	
27	**Bid Item No. 27—PENROD PLACE PVC STORM STRUCTURE (BB)**	
27.1	Work under Section __.	
27.2	Work under Section __.	
…	…	
28	**Bid Item No. 28—SANITARY SEWER SIPHON – BORE & JACK (CAPITOL EXPWY.)(BB)**	
28.1	Work under Section __.	
28.2	Work under Section __.	
…	…	
29	**Bid Item No. 29—SANITARY SEWER SIPHON – OPEN CUT (JACKSON AVE.)(BB)**	
29.1	Work under Section __.	
29.2	Work under Section __.	
…	…	
30	**Bid Item No. 30—TRAFFIC CONTROL JACKSON AVE. (BB)**	
30.1	Work under Section __.	
30.2	Work under Section __.	
…	…	
31	**Bid Item No. 31—TRAFFIC CONTROL CAPITOL EXPWY. (BB)**	
31.1	Work under Section __.	
31.2	Work under Section __.	
…	…	
39	**Bid Item No. 39—RCP CULVERT AT JACKSON AVE. (BB)**	
39.1	Work under Section __.	
39.2	Work under Section __.	
…	…	
40	**Bid Item No. 40—PRECAST RCB CULVERT AT CAPITOL EXPWY. (BB)**	
40.1	Work under Section __.	
40.2	Work under Section __.	
…	…	

TABLE 20.02.03.A1 Preliminary Schedule of Values – Base Bid (BB)		
Item No.	**Description of Item**	**Value ($)**
40B	**Bid Item No. 40B—DOBERN RAMPS AND BRIDGE RAISING (BB)**	
40B.1	Work under Section __.	
40B.2	Work under Section __.	
…	…	
50	**Bid Item No. 50—IRRIGATION SYSTEM (BB)**	
50.1	Work under Section __.	
50.2	Work under Section __.	
…	…	
	TOTAL BID PRICE – BASE BID (BB)	

TABLE 20.02.03.A2 Preliminary Schedule of Values – Bid Additive 1 (BA1)		
Item No.	**Description of Item**	**Value ($)**
57A	**Bid Item No. 57A—COMPLIANCE WITH NPDES GENERAL PERMIT (BA1)**	
57A.1	Work under Section __.	
57A.2	Work under Section __.	
…	…	
57B	**Bid Item No. 57B—SITE REVIEW AND MONITORING OF PROJECT LIMITS AND VICINITY (BA1)**	
57B.1	Work under Section __.	
57B.2	Work under Section __.	
…	…	
57C	**Bid Item No. 57C—NOISE AND VIBRATION MONITORING (BA1)**	
57C.1	Work under Section __.	
57C.2	Work under Section __.	
…	…	
57D	**Bid Item No. 57D—QUALITY ASSURANCE REQUIREMENTS (BA1)**	
57D.1	Work under Section __.	
57D.2	Work under Section __.	
…	…	
58	**Bid Item No. 58—MOBILIZATION (BA1)**	
58.1	Work under Section __.	
58.2	Work under Section __.	
…	…	
59	**Bid Item No. 59—CLEARING AND GRUBBING (BA1)**	
59.1	Work under Section __.	
59.2	Work under Section __.	
…	…	
60	**Bid Item No. 60—CONCRETE REMOVAL (BA1)**	
60.1	Work under Section __.	
60.2	Work under Section __.	
…	…	

TABLE 20.02.03.A2 Preliminary Schedule of Values – Bid Additive 1 (BA1)		
Item No.	**Description of Item**	**Value ($)**
61	**Bid Item No. 61—CONCRETE STRUCTURES REMOVAL (BA1)**	
61.1	Work under Section __.	
61.2	Work under Section __.	
…	…	
68	**Bid Item No. 68—STORM DRAIN OUTFALL MODIFICATIONS (BA1)**	
68.1	Work under Section __.	
68.2	Work under Section __.	
…	…	
72	**Bid Item No. 72—LYNDALE PEDESTRIAN BRIDGE (BA1)**	
72.1	Work under Section __.	
72.2	Work under Section __.	
…	…	
76	**Bid Item No. 76—IRRIGATION SYSTEM (BA1)**	
76.1	Work under Section __.	
76.2	Work under Section __.	
…	…	
	TOTAL BID PRICE – BID ADDITIVE 1 (BA1)	

TABLE 20.02.03.A3 Preliminary Schedule of Values – Bid Additive 2 (BA2)		
Item No.	**Description of Item**	**Value ($)**
83A	**Bid Item No. 83A—COMPLIANCE WITH NPDES GENERAL PERMIT (BA2)**	
83A.1	Work under Section __.	
83A.2	Work under Section __.	
…	…	
83B	**Bid Item No. 83B—SITE REVIEW AND MONITORING OF PROJECT LIMITS AND VICINITY (BA2)**	
83B.1	Work under Section __.	
83B.2	Work under Section __.	
…	…	
83C	**Bid Item No. 83C—NOISE AND VIBRATION MONITORING (BA2)**	
83C.1	Work under Section __.	
83C.2	Work under Section __.	
…	…	
83D	**Bid Item No. 83D—QUALITY ASSURANCE REQUIREMENTS (BA1)**	
83D.1	Work under Section __.	
83D.2	Work under Section __.	
…	…	
84	**Bid Item No. 84—MOBILIZATION (BA2)**	
84.1	Work under Section __.	

TABLE 20.02.03.A3 Preliminary Schedule of Values – Bid Additive 2 (BA2)		
Item No.	**Description of Item**	**Value ($)**
84.2	Work under Section __.	
…	…	
85	**Bid Item No. 85—CLEARING AND GRUBBING (BA2)**	
85.1	Work under Section __.	
85.2	Work under Section __.	
…	…	
86	**Bid Item No. 86—CONCRETE REMOVAL (BA2)**	
86.1	Work under Section __.	
86.2	Work under Section __.	
…	…	
87	**Bid Item No. 87—CONCRETE STRUCTURES REMOVAL (BA2)**	
87.1	Work under Section __.	
87.2	Work under Section __.	
…	…	
89	**Bid Item No. 89—ROADWAY RESTORATION – STORY RD. & MURTHA DR. (BA2)**	
89.1	Work under Section __.	
89.2	Work under Section __.	
…	…	
95	**Bid Item No. 95—STORM DRAIN OUTFALL MODIFICATIONS (BA2)**	
95.1	Work under Section __.	
95.2	Work under Section __.	
…	…	
97	**Bid Item No. 97—TRAFFIC CONTROL STORY RD. (BA2)**	
97.1	Work under Section __.	
97.2	Work under Section __.	
…	…	
98	**Bid Item No. 98—TRAFFIC CONTROL MURTHA DR. (BA2)**	
98.1	Work under Section __.	
98.2	Work under Section __.	
…	…	
105	**Bid Item No. 105—PRECAST RCB CULVERT AT STORY RD. (BA2)**	
105.1	Work under Section __.	
105.2	Work under Section __.	
…	…	
113	**Bid Item No. 113—IRRIGATION SYSTEM (BA2)**	
113.1	Work under Section __.	
113.2	Work under Section __.	
…	…	
	TOTAL BID PRICE – BID ADDITIVE 2 (BA2)	

TABLE 20.02.03.A4 Preliminary Schedule of Values – Bid Additive 3 (BA3)		
Item No.	**Description of Item**	**Value ($)**
120A	**Bid Item No. 120A—COMPLIANCE WITH NPDES GENERAL PERMIT (BA3)**	
120A.1	Work under Section __.	
120A.2	Work under Section __.	
…	…	
120B	**Bid Item No. 120B—SITE REVIEW AND MONITORING OF PROJECT LIMITS AND VICINITY (BA3)**	
120B.1	Work under Section __.	
120B.2	Work under Section __.	
…	…	
120C	**Bid Item No. 120C—NOISE AND VIBRATION MONITORING (BA3)**	
120C.1	Work under Section __.	
120C.2	Work under Section __.	
…	…	
120D	**Bid Item No. 120D—QUALITY ASSURANCE REQUIREMENTS (BA1)**	
120D.1	Work under Section __.	
120D.2	Work under Section __.	
…	…	
121	**Bid Item No. 121—MOBILIZATION (BA3)**	
121.1	Work under Section __.	
121.2	Work under Section __.	
…	…	
122	**Bid Item No. 122—CLEARING AND GRUBBING (BA3)**	
122.1	Work under Section __.	
122.2	Work under Section __.	
…	…	
123	**Bid Item No. 123—CONCRETE REMOVAL (BA3)**	
123.1	Work under Section __.	
123.2	Work under Section __.	
…	…	
125	**Bid Item No. 125— ROADWAY RESTORATION – MURTHA DR. AND MOSS POINT DR. (BA3)**	
125.1	Work under Section __.	
125.2	Work under Section __.	
…	…	
132	**Bid Item No. 132—STORM DRAIN OUTFALL MODIFICATIONS (BA3)**	
132.1	Work under Section __.	
132.2	Work under Section __.	
…	…	
133	**Bid Item No. 133—TRAFFIC CONTROL MURTHA DR. (BA3)**	
133.1	Work under Section __.	
133.2	Work under Section __.	
…	…	

TABLE 20.02.03.A4 Preliminary Schedule of Values – Bid Additive 3 (BA3)		
Item No.	**Description of Item**	**Value ($)**
134	**Bid Item No. 134—TRAFFIC CONTROL MOSS POINT DR. (BA3)**	
134.1	Work under Section __.	
134.2	Work under Section __.	
…	…	
148	**Bid Item No. 148—IRRIGATION SYSTEM (BA3)**	
148.1	Work under Section __.	
148.2	Work under Section __.	
…	…	
	TOTAL BID PRICE – BID ADDITIVE 2 (BA2)	

SECTION 21. CONTRACT CLOSEOUT

21.01. Project Completion and Acceptance

21.01.01. Use Before Acceptance

A. District has the right to utilize or place into service any item of equipment or other usable portion of the work before acceptance of the entire Project. Whenever District plans to exercise said right, the Engineer will notify Contractor in writing, identifying the specific portion or portions of the work to be so utilized or otherwise placed into service, hereinafter referred to as "Use Before Acceptance."

B. Until the Engineer issues such written notification, Contractor is responsible for all care and maintenance of all items or portions of the work.

C. Upon District's issuance of written notice of Use Before Acceptance, District accepts responsibility for the protection and maintenance of all such items or portions of the work described in the written notice, excepting any injury or damage resulting from Contractor's actions or negligence.

D. If, by reason of District's Use Before Acceptance, the premium for the Contractor's bodily injury and property damage insurance is increased, District will reimburse the Contractor for the additional amount necessarily incurred, allocable to the area and the period of District's occupancy, up to the date of acceptance of the work.

E. District's Use Before Acceptance does not constitute acceptance of the work, or any portion of the work, by District, nor will it relieve the Contractor of responsibility for correcting defective and/or deficient work or materials found at any time before acceptance of the work or during the guaranty period after District's Acceptance. However, when the Project includes separate buildings, and one or more of the buildings is complete and entirely occupied by District, then upon written request by the Contractor and by written consent from District, the guaranty period on the building entirely occupied by District will commence to run from the date of District occupancy of such building or buildings.

F. Notwithstanding any Use Before Acceptance, Contractor retains full responsibility for fulfillment of all the requirements of the Contract documents.

G. Should the District elect to partially occupy or use portions of the work prior to acceptance, Contractor must perform final cleaning for those portions of the work prior to their being so occupied or used.

21.01.02. Contractor's Responsibility to Manage Incomplete and Deficient Work

A. The Contractor is responsible for identifying and managing incomplete and deficient work. Incomplete and deficient work includes, but is not limited to: non-compliance items, re-work items, and non-conforming tests; deficiencies

relating to inspections by the Building Official; and items of work not complete per the Contract.

B. The Preliminary and Final Inspection will not be conducted until:

1. The entire work of the Milestone/Project is complete;

2. Cleaning has occurred pursuant to Articles 11.03, "Site Maintenance and Clean-Up" and 21.06; "Final Clearing" of these Specifications and

3. Deficient work identified in all outstanding non-compliance notices has been corrected.

C. For each Milestone completion, the Contractor must include activities for conducting the Preliminary Final Inspection, completion of Deficiency List, and Final Inspection in Contractor's Progress Schedule.

21.01.03. Milestone Completion Preliminary Final Inspection

A. When the Contractor believes the work of a Milestone or Project is complete, including final cleaning of the work area associated with the Milestone, the Contractor shall submit to the Engineer three (3) copies of a written certification that the work of the Milestone is complete and request a Preliminary Final Inspection of the work of the Milestone by the District.

B. Prior to requesting the inspection, the Contractor shall furnish the following Milestone Completion Certification to District:

"*To the best of my knowledge, all work of Milestone (#) has been completed, inspected, tested and is in full compliance with the requirements of the Contract*."

Certified by Contractor: _____ *Date:* _____
(Signature)

C. Within seven (7) days of receipt of the Contractor's certification that all work of a Milestone/Project is complete, the Engineer will conduct a Preliminary Final Inspection with the Contractor.

D. If the Engineer determines that, based on the results of the Preliminary Inspection, the incomplete/deficient work identified is greater in substance and/or volume, than can be appropriately declared as Deficiency List, then the work is not complete enough to complete the Preliminary Final Inspection. The Contractor will be so notified in writing. Contractor must complete the work and re-initiate procedures for another Preliminary Final Inspection. Any costs to District for more than two (2) Preliminary Inspections may be charged to the Contractor.

E. If the results of the Preliminary Final Inspection are satisfactory to the Engineer, a Deficiency List will be prepared and issued to the Contractor. Neither the District's preparation of the Deficiency List, nor any omission from the Deficiency List of items of Incomplete and/or Deficient Work, relieves the Contractor from completing all the work required by the Contract.

21.01.04. Milestone Completion Final Inspection

A. Prior to requesting the Milestone Completion Final Inspection, the Contractor shall furnish the following Milestone Completion Certification to the District:

"*The work of Milestone (#) has been completed, inspected, tested and is in full compliance with the requirements of the Contract. All Deficiency List items identified during the Preliminary Final Inspection have been completed*."

Certified by Contractor: _____ *Date:* _____
(Signature)

B. Upon delivery of such certification to the Engineer, and if the Engineer agrees with the Contractor's certification, a Final Inspection will occur within ten (10) calendar days of the Contractor's delivery of Milestone Completion Certification.

C. If the Engineer determines the work is deficient, Contractor will again be furnished with a Deficiency List identifying the observed deficiencies in the work. After all deficiencies have been corrected, Contractor must initiate procedures for another Final Inspection. If more than two (2) Final Inspections are required any costs to the District for additional Final Inspections may be charged to the Contractor.

D. After acceptance of the Contractor's Milestone Completion Certification following the Final Inspection, the Engineer will issue a Milestone Completion letter to the Contractor. This letter will establish the date of the completion of the Milestone. The assessment of Liquidated Damages, if applicable, will cease accruing as of the date of Milestone Completion.

E. Contractor's Progress Schedule must include activities for Final Inspection of Milestones.

21.01.05. Project Completion

A. The Contractor shall certify that the entire work of the Project is complete. Completion of the Project includes submission to and acceptance by the District of all Milestone completion submittals. Article 21.05.02, "Closeout Documents" of these Specifications describes in greater detail the submittal requirements for Contract Closeout.

B. Prior to the Engineer issuing the Project Completion letter, the Contractor shall furnish the following Project Completion Certification to District. This certification is in addition to any intermediate Milestone Completion certifications:

"*The entire work of the Project has been completed, inspected, tested and is in full compliance with the requirements of the Contract documents. All Deficiency List items have been completed. All items on the rework list have been completed. All Closeout Documents required by Article 21.05.02, "Closeout Documents" of these Specifications have been submitted to and accepted by the Engineer*."

Certified by Contractor: _____ *Date:* _____
(Signature)

C. The Contractor's certification shall also include the completion of all Deficiency List work and the correction of all rework.

D. After acceptance of the Contractor's final certification, the Engineer will issue a Project Completion letter to the Contractor. This letter will establish the date of the Completion of Project. The assessment of Liquidated Damages, if any, will cease accruing as of the date of Project Completion.

21.01.06. Acceptance of Work

A. District shall accept the work in two (2) separate Stages of Construction, Statge 1 and Stage 2. Stage 1 is the completion of all construction installation under the authorized contract and Stage 2 is the completion of the maintenance for all items in the authorized contract.

B. After issuing the Project Completion letter for Stage 1 or Stage 2, the Engineer will recommend that the District Board of Directors formally accept separately the respective Stage of the work.

B. Separate acceptance of the Stage 1 or Stage 2 work will be made by the District Board of Directors only in regular session and only after the Engineer has recommended acceptance of the respective Stage.

C. After the Board of Director's formal acceptance of a Stage of the work, the Clerk of the Board will record a Notice of Completion and Acceptance separately for that Stage.

D. District's acceptance establishes conformity with the Contract except for delays in completion, latent defects, fraud, or such gross errors as amount to fraud, willful misconduct, or gross negligence, and subject to any Guarantee and Warranty, express or implied. Determinations by Engineer that the work is complete or acceptance of the work by the Board of Directors does not bar any action by the District against the Contractor pursuant to Article 21.02, "Guaranty and Guaranty Bond" of these Specifications.

E. Final Payment for each Stage 1 and Stage 2 shall be per Articles 8.04 “Final Payment” and 20.06 “Payment” Item B.

21.02. Guaranty and Guaranty Bond

21.02.01. Guaranty

A. The guaranty period for any item of equipment or usable portion of the Stage 1 or Stage 2 work that the District utilizes or places into service shall commence on the date of the Notice of Completion and Acceptance of the respective stage. B. The Contractor hereby agrees to make, at its own expense, all repairs or replacements necessitated by defects in materials or workmanship, pavement subsidence or pavement damage, supplied or constructed under the terms of this Contract, and to pay for any damage to other works resulting from such defects, that becomes evident within a minimum of three years after the date of Notice of Completion and Acceptance of the entire Project or within such longer period of time as may be prescribed by law or by the terms of any applicable special guarantee required by the Contract documents. The Contractor further assumes responsibility for a similar guarantee for all work and materials provided by subcontractors or manufacturers of package equipment components. Packaged equipment components are defined to include equipment furnished under the Technical Provisions. The Contractor also agrees to indemnify, defend and hold the District harmless from liability of any kind arising from damage due to said defects.

C. The Contractor shall execute and submit a completed Guaranty Form in the format appended to this Section for the work. The Guaranty Form shall be submitted to the Engineer in accordance with Article 3.11, “Guaranty” of the Standard Provisions in these Specifications.

D. The Contractor shall, upon receipt of notice in writing from the District, promptly make all repairs arising out of defective materials, workmanship, or equipment. The District is hereby authorized to make such repairs, and the Contractor and its Surety shall be liable for the cost thereof, if ten days after giving of such notice to the Contractor, the Contractor has failed to make or undertake the repairs with due diligence. In case of emergency, where in the opinion of the District delay could cause serious loss or damage, repairs may be made without notice being sent to the Contractor, and the expense in connection therewith shall be charged to the Contractor, and its Surety shall be liable for the cost thereof.

E. Prior to the expiration of the Guaranty period, the District reserves the right to hold a meeting and require the attendance of the Contractor and relevant subcontractors and suppliers. The purpose of the meeting is to review guaranties, bonds, and maintenance requirements and determine the required repair or replacement of defective items.

F. For the purpose of this Section, acceptance of the work or a portion of the work by the District shall not extinguish any covenant or agreement on the part of the

Contractor to be performed or fulfilled under this Contract which has not, in fact, been performed or fulfilled at the time of such acceptance. All covenants and agreements shall continue to be binding on the Contractor until they have been fulfilled.

21.02.02. Guaranty Bond

A. The Contractor shall furnish a written Guaranty Bond. Unless noted otherwise, this Guaranty Bond shall be for a period of three years after the date of Notice of Completion and Acceptance and shall cover all work. It shall be furnished, in a form acceptable to the Engineer in the format of the attachment to this Section, prior to final payment.

B. The amount of the Guaranty Bond shall be no less than 15 percent of the Total Contract Price.

SANTA CLARA VALLEY WATER DISTRICT

GUARANTY FORM

Guaranty for
(Lower Silver Creek – Reaches 4, 5 and 6A
Between Interstate 680 and Moss Point Drive
Project #4265)

San Jose, CA

We hereby guarantee the Project commonly known as _____ has been completed in accordance with the requirements of the Contract documents and further agree that the work to be free of defects in workmanship, equipment and materials and to remain free of such defects for a period of three (3) years from the date of acceptance of the work by the District's Board of Directors, unless a longer/shorter period(s) is called for by the Contract documents.

We agree that if any defects in materials, workmanship, or equipment become evident, we will, within ten days after written notice of such defects, commence to repair or replace the same together with any other work that may be damaged or displaced in so doing.

In the event of our failure to comply with the above mentioned conditions within a reasonable time after being notified, or should the emergencies of the case require repairs or replacements to be made before we can be notified or respond to notification, we do hereby authorize the Santa Clara Valley Water District to proceed to have the defect repaired and made good at our expense, and we will pay the cost therefore upon demand.

The Guaranty provided herein shall not be in lieu of, but shall be in addition to any warranties or other obligations otherwise imposed by the Contract documents and by law.

Contractor: _____

Signed: _____

Title: _____

Date: _____

SANTA CLARA VALLEY WATER DISTRICT

GUARANTY BOND

BE IT KNOWN BY THESE PRESENTS: That

WHEREAS, the Santa Clara Valley Water District, State of California, has awarded to _____ (hereinafter designated as "Principal") a Contract for _____; and

WHEREAS, said Principal is required under the terms of said Contract to furnish a Guaranty Bond for the faithful performance of said Contract's Guaranty.

NOW, THEREFORE, we, the Principal and _____ _____ as Surety, are held and firmly bound unto the Santa Clara Valley Water District (hereinafter called "District") in the sum of _____ _____ Dollars ($_____) lawful money of the United States, for the payment of which sum well and truly to be made, we bind ourselves, our heirs, executors, administrators and successors, jointly and severally, firmly by these presents.

THE CONDITION OF THIS OBLIGATION IS SUCH that if the above Principal, or heirs, executors, administrators, successors, or assigns shall in all things stand to and abide by, and well and truly keep and perform the covenants, conditions and agreements in the said Contract and any alteration thereof made as therein provided, to be kept and performed at the time and in the manner therein specified, and in all respects according to their true intent and meaning, and shall indemnify and save harmless District, its officers, agents, and employees, as therein stipulated, then this obligation shall become null and void; otherwise it shall be and remain in full force and effect.

And the said Surety, for value received hereby stipulates and agrees that no change, extension of time, alteration, or addition to the terms of the Contract or to the work to be performed thereunder or the Specifications accompanying the same shall in any wise affect its obligation on this bond, and does hereby waive notice of any such change, extension of time, alteration, or addition to the terms of the Contract or to the work or to the Specifications.

In the event suit is brought upon this bond by District and judgment is recovered, Surety shall pay all costs incurred by District in such suit, including a reasonable attorney's fee to be fixed by the Court.

IN WITNESS WHEREOF two identical counterparts of this instrument, each of which shall for all purposes be deemed an original thereof, have been duly executed by Principal and Surety above named, on the _____ day of _____, 20_____.

_____	(Seal)	_____	(Seal)
_____	(Seal)	_____	(Seal)
_____	(Seal)	_____	(Seal)
Principal		Surety	
Address		_____	
		_____	

NOTE: Signature of those executing for Surety must be properly acknowledged.

21.03. NOT USED

21.04. Testing and Facility Startup

A. This Article includes requirements for materials, equipment, instrumentation, structure, and process system testing and startup.

21.04.01. Testing and Startup Overview

A. Certain portions of the work will be modified and completed at scheduled interim dates before completion of the Project. Consequently, testing and startup activities will be taking place throughout much of the duration of the work.

B. See other provisions in these Specifications for detailed testing requirements that shall be completed in the framework of the testing and startup overview described herein.

C. The general sequence of testing and startup will proceed as follows. Variations to this general sequence may be authorized by the Engineer where necessary to meet constraints described in these Contract documents and permits from authorities having jurisdiction.

1. General construction testing. For example: soils compaction and moisture content, welding, concrete properties, coating application, carrier piping pressure, etc.

2. Submittals. All submittals relevant to installation practices, equipment, piping, anchorage calculations, controllers, materials, and testing plans have been submitted to the Engineer and received No Exceptions Noted review status.

3. Factory testing. Where required prior to the shipment of equipment to the site, complete factory testing. Such testing may be both unwitnessed and witnessed by the Engineer and/or District staff as specified and at their discretion.

4. Operations and maintenance manual: Operations and maintenance manuals for equipment shall be submitted and receive No Exceptions Noted review status.

5. Construction complete. Construction is complete so that facility is ready to be used for its intended purposes. Signage is posted.

6. Electrical testing. Testing, programming, and setting of irrigation controller, equipment, batteries, grounding, and other components as specified in Technical Provisions prior to equipment startup.

7. Training. Training of District staff as specified for equipment programming, operation and maintenance before each associated system is placed into service.

8. Test each irrigation valve, and other wiring components for proper installation, termination, and identification.

9. Review and testing of irrigation systems/schedules and operation of controller boxes/valves serving vegetation installed as part of the project.

21.04.02. NOT USED

21.04.03. NOT USED

21.04.04. NOT USED

21.04.05. NOT USED

21.04.06. Submittals

A. Submit the following documentation at least 30 days prior to the first scheduled activity for the new facility or existing process system testing.

1. Individual testing plans for the irrigation system. Testing plans should summarize all planned work leading to the startup of the System.

2. Blank test forms and checklists showing data to be recorded and checkout procedures prior to each test, whether factory or on-site.

3. Completed test forms and records after testing is completed.

21.05. Submission of Closeout Items

21.05.01. Record Drawings and Specifications

A. At completion of construction, and prior to the final acceptance of the work by the District, the Contractor shall deliver the following Contract record documents to the Engineer in the following form:

1. Marked-up Contract Drawings (2 copies): Bound into sets of convenient size for ease of handling.

2. Marked-up Specifications (2 copies): Bound into 3-ring vinyl binders with clear plastic spine label pockets.

3. Irrigation SystemTest Records (2 copies): Bound into 3-ring vinyl binders with clear plastic spine label pockets. Number all pages. Provide a

complete, neat, word-processed table of contents for each binder, with page numbers for each entry.

4. Field survey record documentation.

B. Accompany the final record document submittal with a transmittal letter in duplicate, containing:

1. Date
2. Santa Clara Valley Water District and (Project Name and Project Number)
3. Contractor's name and address
4. Title and number of each record document
5. Certification that each document as submitted is complete and accurate
6. Signature of Contractor

21.05.02. Closeout Documents

A. At completion of construction, and prior to the final acceptance of the work by the District, the Contractor shall deliver the following Closeout Documents to the Engineer:

1. Evidence of compliance with and approval of Contractor-obtained permits and associated inspections of authorities issuing the permits.

2. Copies of all special guarantees, warranties, and bonds.

3. Evidence of release of all liens and stop notices.

4. Release of claims as outlined in the Standard and Special Provisions.

B. Provide records indicating District's receipt and acceptance of all tools, spare parts, and extra materials as specified in the Technical Provisions.

C. Provide records indicating District's receipt and acceptance of all O&M manuals as specified in these Specifications.

21.05.03. Keys

A. Turn over all keys to new and existing gates, controller cabinets, etc. to the Engineer. This includes keys that were loaned (if any) to Contractor staff by the District for use during the construction period. Provide a written description or schedule to describe which keys correspond to which gates, controllers or other feature.

21.06. Final Cleaning

21.06.01. Schedule for Final Cleaning

A. Final cleaning is separate work from the cleaning done throughout the Project to maintain the project site in a safe and presentable condition. Final cleaning shall be a comprehensive clean up of all new and selected existing facilities begun and finished within 30 days of District's acceptance for continuous use and occupancy. Final cleaning may be performed separately by structure or area at different time periods only if approved by the Engineer.

B. Completion of this work shall be planned and scheduled to accommodate the operational requirements of this District facility.

21.06.02. NOT USED

21.06.03. Streets, Roadways, Concrete Slabs, Walls, Sidewalks, and Paved Areas

A. Streets, roadways, concrete slabs, walls and paved areas shall be cleaned and pressure washed so that they are free of debris, soil, and paint or construction material spills. Painted construction markings on concrete and pavement shall be removed.

21.06.04. Storm Drainage Facilities

A. All gutters, V-ditches, swales, storm drain pipe inlets, catch basins, drop inlets, and manholes shall be cleaned of soil, vegetation, and debris.

21.06.05. Unpaved Areas

A. Unpaved and rocked areas shall be cleaned of all debris and construction materials. These areas shall be graded or raked to a smooth uniform surface without holes, depressions, or tire tracks.

21.07. Payment

A. Unless noted otherwise, full compensation for furnishing all labor, materials, tools, equipment and incidentals, and for doing all work involved in complying with all requirements under Section 21, "Contract Closeout" shall be considered incidental and included in the prices bid for various items of work and no additional payment will be made therefore.

Page left intentionally blank

TECHNICAL PROVISIONS

Page Left Intentionally Blank

22 PREPARATORY WORK

The Contractor's attention is directed to Article 15.02 "Utilities", 15.03 "Protection of Existing Improvements" and 15.04 "Site Review and Monitoring of Project Limits and Vicinity" of these Specifications.

All preparatory work and Clearing and Grubbing shall be in accordance with the findings and recommendations in the "Geotechnical Investigation Report for Lower Silver Creek Reaches 4-6A" by Parikh Consultants, Inc., dated May 2010.

22.01 Mobilization—Bid Item Nos. 2, 58, 84, 121

22.01.01 Scope of Work

Mobilization shall consist of all preparatory work and operations necessary for the movement of personnel, equipment, supplies and incidentals to the project site; for the establishment of all facilities necessary for work on the project; and for all other work and operations which must be performed as part of mobilization as specified in these Specifications, or costs incurred prior to beginning work on the various contract items on the project site.

The Contractor shall coordinate with the District to notify all property owners, businesses, and residents, within a 500-foot radius of the project sites, seven (7) days prior to the start of construction activities. The Contractor shall provide a schedule and directions to the District for proper notification as requested by the Engineer.

22.01.02 Materials

A. Office facilities shall be in accordance with Article 13.03, "Office Facilities," of these Specifications.

B. Project signs shall be in accordance with Article 13.02, "Project Signs," of these Specifications.

C. Pollution control shall be in accordance with the following Articles in these Specifications:

17.03 Noise Pollution and Vibration
17.04 Air Pollution
17.05 Spillage and Dust
18.01 Compliance With NPDES General Permit
18.04 Water Pollution Nuisance

18.05 Regulated Material Management
18.06 Solid Materials Management

22.01.03 Placement

Office facilities shall be placed in accordance with Article 13.03, "Office Facilities." Project signs shall be installed and removed as shown on the Drawings and in accordance with Article 13.02, "Project Signs."

22.01.04 Testing

No special requirements.

22.01.05 Submittals

The Contractor shall submit the Notification Letter to the District for approval. Submittals of pollution control shall be in accordance with Section 15 of these Specifications.

Submittals for Pollution Control shall be in accordance with the Sections of these Specifications which are listed in "Materials", above.

22.01.06 Measurement

Mobilization will not be measured.

22.01.07 Payment

Full compensation for furnishing all labor, materials, tools, equipment and incidentals and for doing all work required for mobilization as shown on the Drawings, as specified in these Specifications, and as directed by the Engineer, shall be included in the lump sum price bid for MOBILIZATION, Bid Item No. 2 and Bid Additive Item Nos. 58, 84 and 121, if/when included in the awarded project by the District.

22.02 Clearing and Grubbing – Bid Item Nos. 3, 59, 85, 122

22.02.01 Scope of Work

Clearing and grubbing shall be performed in advance of earthwork and in accordance with requirements in these Specifications.

Clearing and grubbing shall consist of clearing and grubbing activities, including, but not limited to, the removal and disposal of designated trees and shrubs including roots, tree branches and stumps, brush, shrubs, reeds, weeds, roots and stems of giant reed (Arrundo donax), scrap wood and metal, debris, rocks, concrete rubble, sacked concrete buried man-made objects and concrete blocks, sediments, pipes, irrigation system, abandoned utilities, and all objectionable materials from the work site. The Contractor shall make arrangements with local recyclers, within Santa Clara County, to recycle the material removed during clearing and grubbing. Local recyclers may be found on the internet at www.recyclestuff.org.

Clearing and grubbing work shall be in accordance wit the findings and recommendations in the "Geotechnical Investigation Report for Lower Silver Creek Reaches 4-6A" b Parikh Consultants, Inc., dated May 2010, and in accordance with the provisions of Section 16, Clearing and Grubbing, of the State Specifications, except as modified herein. The Contractor must limit the extent of channel clearing and grubbing activities each year to only the portion of the creek where flood protection improvements will be completed by the dates specified in Article 11.06.02 "Detailed Schedule of Work", Item B4. The project area shall be cleared and grubbed only to the extent necessary to accommodate the work, and in conformance with the notes and details shown on the Drawings.

The Contractor shall provide an on-site arborist during clearing and grubbing. The on-site arborist will be authorized to give direction to the Contractor to prevent unnecessary damage to the health of private trees or their roots, substrate, trunk, limbs, or foliage and to remedy any damage done to the same. The arborist shall be certified by the International Society of Arboriculture (ISA) or the American Society of Consulting Arborists (ASCA). Work shall not proceed without the presence of this arborist unless approved by the Engineer.

Tree removal shall include all trees within the project area. Trees are shown on the Drawings to be removed, however it is the responsibility of the Contractor to visit the site and ascertain the location and nature of all trees, of which all are to be removed as part of this Scope of Work, whether shown on the Drawings or not. The Contractor must give the Engineer a minimum one-week notice before any trees are removed.

The channel improvements will be constructed in very close proximity to backyard shrubs, trees, and improvements. The Contractor shall take extreme care not to damage these items unless shown on the Drawings to be removed or approved by the Engineer. The Contractor's attention is directed to Article 15.02 "Utilities", 15.03 "Protection of Existing Improvements" and 15.04 "Site Review and Documentation of Project Limits and Vicinity" of these Specifications. No tree or growth shall be trimmed back without written approval of the Engineer, including plants, trees and shrubs growing near the right of way, which overhang onto the

work site. Such overhanging foliage shall be protected and tied back if necessary. Landscaped areas and irrigation systems outside of the construction areas shall be preserved and protected from damage by the Contractor's operation.

Tree protection shall be provided for any existing tree to remain that is located outside of the construction area, and has a canopy that overhangs the construction fence into the construction area. The general contractor shall arrange to hire laborers whose specific job it will be to carry out the tree protection work; for example installing and moving if necessary, tree protection fencing, obtaining and spreading mulch, watering trees, etc.

1. Fencing – Install tree protection fencing before any demolition or construction begins to any trees to remain within or just outside the construction limits. The area inside the fencing is termed the TPZ (Tree Protection Zone). The TPZ shall be 5x diameter of the trunk at a minimum. In all cases place the fence as far from the protected tree's trunk as possible, in order to provide the maximum amount of protected space for each tree. The arborist must meet on site with the general contractor and fencing contractor prior to demo to agree upon fence placement. The fencing shall not be taken down or moved without the arborist's permission.

   Material and installation: The fence shall be orange plastic fencing per Article 28.04 "Temporary Fence" of these Specifications with steel posts driven a minimum 18" into the ground so they cannot be easily moved. An 18"-24" wide gap shall be left in the fencing (bordered by posts on each side) to allow access for tree work and monitoring. If it is not possible to fence off a particular tree, then the trunk of the tree must be wrapped with 2" x 6-12" vertically stacked lumber from the ground up, with a gap of 1 to 2 inches between the boards, fastened to the tree with a rope or metal straps at the top, bottom and middle. The lumber is then wrapped with orange plastic snow fence from the ground level up to the lowest accessible branches.

2. Underground utilities – Utilities that will pass within a tree protection zone shall be reviewed by the project arborist to prescribe any mitigation procedures that will reduce damage to trees such as tunneling below or between existing roots to remain, hand digging or a combination of such methods. If utilities must pass through tree protection zones, the arborist must be on site to supervise this work and assist in dealing with roots.

3. Irrigation – Make sure that any trees that will be near construction or demo disturbance are well hydrated before any demo or construction begins. Irrigate the trees if necessary below the surface. This will help the trees go into the project strong and not drought-stressed, so they will be better able to weather any damage they may experience. The frequency and amount of water will

depend upon the weather, the damage of the tree, and the soil moisture status. The project arborist can provide directions for irrigation depending on the tree condition just prior to construction.

4. Mulching – Trees to be removed should be chipped on site. The chips shall become the property of the Contractor and shall either be disposed offsite or may be stored in an area designated by the site Engineer. These chips may be used as mulch for trees to remain on adjacent properties. The arborist will determine which trees shall receive mulch. If mulch is required for trees, it shall be spread per the Arborist's recommendations.

All existing trees on adjacent properties, not approved for removal, which require root or limb pruning for construction clearance or to correct accidental damage which occurred during construction shall be pruned, by an ISA- or ASCA-certified arborist or ISA-certified tree worker, per the "Tree Pruning Guidelines (ISA, 1995)," only as necessary and only with the approval of the Engineer.

No stubs or splits or torn branches shall be left; clean cuts shall be made outside the branch bark ridges or collar. Flush cuts shall not be made. Spikes shall not be used for climbing live trees to remain. If any roots from a tree to remain are exposed during work, they shall be covered immediately with a double layer of wet burlap anchored to the soil and rewetted daily or more often to prevent root desiccation.

The Contractor shall immediately notify the Engineer and the arborist if any tree is damaged above or below ground. If the Engineer deems the damage to have been avoidable and due to Contractor negligence, a penalty amount shall be deducted from the Contractor's payment. The penalty amount shall be set at the Engineer's discretion and shall range from $1,000 minimum for creating a small trunk or limb wound to a maximum of the value of the entire tree as determined by the formula below if the damage shall, in the opinion of the Engineer, cause the tree to fail within the next five (5) years. If the damage is such that tree removal is necessary in the opinion of the Engineer, the Contractor shall remove the tree at the Contractor's own expense and forfeit from payment an amount equal to the value of the tree as calculated below.

Trunk Diameter (D) of Tree Wounded or Broken or Removed	**Charge to Contractor for Each Tree Wounded or Broken or Removed**
Up to 6 inches	$ 500
From 6 to 12 inches	$1,500
From 12 to 18 inches	$5,000
Greater than 18 inches	Use formula: Charges, $ = 100 x 5D, *Where "D" equals the trunk diameter, in inches, measured at 4.5 feet above the base of the tree.* ***Note**: Not to exceed $50,000*

Existing facilities which are to remain in place shall be protected in accordance with the provisions of SECTION 6, "Legal Relations and Responsibility," of these Specifications.

22.02.02 Materials

Quarter-ton (Class 1/4 T) rocks removed from the creek, if free of concrete rubbles, deleterious or organic materials and debris, and uncontaminated with regulated material, shall be reused for rock slope protection as described in Section 31, "Slope Protection" of these Specifications.

Backfill for over-excavated areas resulted from the removal of concrete rubble, sacked concrete, buried man-made objects or concrete blocks shall conform to Article 23.01.02, "Channel Embankment."

22.02.03 Placement

All existing joint poles, overhead utility lines, fences or other improvements not specifically designated on the Drawings to be removed or relocated shall remain in their original condition and location undisturbed. However, upon written permission by the Engineer, fences and other existing improvements may, for the convenience of, and at the expense of the Contractor, be removed and temporarily relocated during construction and shall be replaced in their original location in as good or better condition as when the Contractor entered upon the work site.

All areas that have been over-excavated during the removal of concrete rubble, sacked concrete, buried man-made objects or concrete blocks shall be backfilled with suitable material in accordance with Article 23.01.02, "Channel Embankment," of these Specifications, at the Contractor's own expense.

All cleared and grubbed materials (except Quarter-ton rocks determined to be suitable for rock slope protection), which cannot be recycled locally, shall be removed from the project site and legally disposed of outside of the right of way in an area provided by the Contractor in accordance with the provisions of Section 7-1.13, Disposal of Material Outside the Highway Right of Way, of the State Specifications, at the Contractors expense and at no additional cost to the District.

22.02.04 Testing

No special requirements.

22.02.05 Submittals

The Contractor shall submit for the Engineer's approval a “Statement of Qualifications” for each arborist and tree worker, showing their education, work history, number of years certified, as well as proof of current licensure in an appropriate category (consulting arborist, arborist, tree worker) and professional association (ISA or ASCA).

Prior to beginning any clearing and grubbing work, Contractor shall submit a plan that depicts the proposed limits and phasing of the clearing and grubbing.

The Contractor shall submit a recycling plan outlining all materials to be recycled. The plan shall indicate the material to be recycled and the location of the recycling center where the material will be delivered. The plan shall also indicate the materials to be removed that will not be recycled. The plan shall be submitted to the Engineer for review and approval.

22.02.06 Measurement

The quantities of clearing and grubbing will not be measured.

22.02.07 Payment

Full compensation for furnishing all labor, materials, tools, equipment and incidentals, and for doing all work required to clear and grub work areas per this Article and as shown on the Drawings, as specified in these Specifications, and as directed by the Engineer, shall be included in the lump sum price bid for CLEARING AND GRUBBING, Bid Item No. 3 and Bid Additive Item Nos. 59, 85 and 122, if/when included in the awarded project by the District.

Full compensation for stripping fill areas as shown on the Drawings as specified in the Specifications, and as directed by the Engineer, shall be included in the price

bid per cubic yard for CHANNEL EXCAVATION AND EMBANKMENT, Bid Item No. 9 and Bid Additive Item Nos. 63, 88 and 124, if/when included in the awarded project by the District, and no separate payment will be made therefore.

22.03 Demolition and Disposal

22.03.01 Concrete Removal – Bid Item Nos. 4, 60, 86, 123

22.03.01.01 Scope of Work

Concrete removal shall consist of the removal and disposal of existing concrete structures and improvements, which interfere with the construction required under this Contract and includes wingwall transitions, concrete abutments, concrete bridge piles and pile caps, channel lining, cutoff walls, barriers, headwalls, sidewalk, driveways, curb and gutter, and fence foundations, other miscellaneous concrete structures and improvements, as shown on the Drawings, as specified in these Specifications and as directed by the Engineers.

Concrete removal does not include the removal of concrete rubble, sacked concrete, buried man-made objects, or concrete blocks on the bottom or sides of the existing creek channel. Removal of such material is included in CLEARING AND GRUBBING.

22.03.01.02 Materials

No special requirements.

22.03.01.03 Placement

Concrete removal shall conform to the provisions of Section 15-3, Removing Concrete, and Section 15-4, Bridge Removal, of the State Specifications, except as modified herein.

Concrete disposed of offsite must be hauled to a concrete recycle facility, meeting all federal, site, local regulations and approved by the Engineer. Demolished concrete shall not be buried in structure backfill.

Excavation and backfill shall conform to provisions of Section 23, “Earthwork,” of these Specifications.

22.03.01.04 Testing

No special requirements.

22.03.01.05 Submittals

The Contractor is required to submit the location that concrete will be recycled. The location must meet all federal, state, and local regulations and be approved by the Engineer.

22.03.01.06 Measurement

Concrete Removal will not be measured.

22.03.01.07 Payment

Full compensation for furnishing all labor, materials, tools, equipment and incidentals and for doing all work required for concrete removal, as shown on the Drawings, as specified in these Specifications, as directed by the Engineer, and including design and construction of shoring systems shall be included in the lump sum price bid for CONCRETE REMOVAL, Bid Item No. 4 and for Bid Additive Item Nos. 60, 86 and 123, if/when included in the awarded project by the District.

22.03.02 Concrete Structures Removal – Bid Item Nos. 5, 61, 87

22.03.02.01 Scope of Work

Concrete structures removal shall consist of the removal and disposal of existing concrete structures at the following locations required under this Contract as shown on the Drawings, as specified in these Specifications, and as directed by the Engineers:

Location A – the existing reinforced concrete apron slab and warped wingwalls at Interstate 680 (from Station 127+94± to Station 128+30±);

Location B – the existing reinforced concrete box (RCB) culvert, apron slabs and warped wingwalls at Jackson Avenue (from Station 130+20±to 131+50±)

Location C – the existing concrete apron slabs, warped wingwalls, and debris stem wall at Capitol Expressway. (from Station 159+40± to 154+69±)

Location D – the existing concrete abutments and approach concrete pavement at Lyndale Avenue pedestrian bridge (at Station 171+69±).

Location E – part of the existing RCB culvert, at Story Road (from Station 180+38.5± to Station 181+77.2±)

Location F – Sawcut and remove a portion of Concrete Parking. (at Station 181+70±)

Temporary support shoring, temporary bracing, and protective covers as required, shall be designed and constructed in accordance with the provisions in Section 51-1.06, "Falsework", of the State Specifications.

22.03.02.02 Materials

No Special Requirements

22.03.02.03 Placement

Removal shall conform to the provisions of Section 15-3, "Removing Concrete", of the State Specifications, except as modified herein. The Contractor shall make arrangements with local recyclers, with Santa Clara County, to recycle material removed. Local recyclers may be found on the internet at www.recyclestuff.org. Removal operations shall be conducted in such a manner that the operation of the structure not yet removed remains in stable conditions at all times.

All removed concrete that are not to be recycled or reused in the work shall become the property of the Contractor and shall be legally disposed of outside the right of way at a location provided by the Contractor in accordance with the provisions in Section 7-1.13, "Disposal of Material Outside the Highway Right of Way" of the State Specifications. The disposal location shall meet all federal, state, and local regulations and be approved by the Engineer. Demolished concrete shall not be buried in structure backfill.

Excavation and backfill shall conform to provisions of this Section 23, "Earthwork," of these Specifications.

22.03.02.04 Testing

No Special Requirements

22.03.02.05 Submittals

The Contractor shall submit a recycling plan outlining all materials to be recycled. The plan shall indicate the material to be recycled and the location of the recycling center where the material will be delivered. The plan shall also indicate the materials to be removed that will not be recycled. The plan shall be submitted to the Engineer for review and approval.

The Contractor shall submit a culvert removal plan to the Engineer detailing procedures and sequence for removing portions of culverts, including all features necessary to do the work in a safe and controlled manner.

The removal plans shall include the following:

A. The removal sequence for the entire structure, or portions thereof, including staging of removal;

B. Equipment locations on the structure during removal operations;

C. Temporary support shoring or temporary bracing;

D. Details and locations of protective covers or other measures to assure that people, property and improvements will not be endangered.

The Contractor shall submit to the Engineer, working drawings with design calculations, for the proposed culvert removal plan. The culvert removal plan shall be prepared by an engineer who is registered as a Civil Engineer in the State of California. The design calculations shall be adequate to demonstrate the stability of the structure during all stages of the removal operations. Calculations shall be provided for each stage of culvert removal and shall include dead and live load values assumed in design of protection cover if applicable.

The culvert removal plan shall conform to the requirements in Section 5-1.02, “Plans and Working Drawings”, of the State Specifications. The number of sets of drawings and design calculations and times for review for any culvert removal plans shall be the same as specified for falsework working drawings in Section 51-1.06A, “Falsework Design and Drawings”, of the State Specifications.

Approval by the Engineer of the culvert removal plans or field inspection performed by the Engineer will in no way relieve the Contractor of full responsibility for the culvert removal plan and procedure.

The time to be provided for the Engineer’s review of the working drawings for removing specific structures, or portions thereof, shall be as follows:

Structure or Portion of Structure	Review Time (Weeks)
Apron Slab and Wingwalls at Interstate I-680	4
Aprons and Wingwalls and RCB Culvert at Jackson Avenue	4
Apron Slabs and Wingwalls, etc. at Capitol Expressway	4
Lyndale Pedestrian Bridge Abutments	4
RCB Culvert portion at Story Road	4

Approval by the Engineer of the culvert removal plans or field inspection performed by the Engineer will in no way relieve the Contractor of full responsibility for the culvert removal plan and procedure.

Prior to proceeding with culvert removal where a culvert removal plan is required, the Contractor's registered Civil Engineer in the State of California shall inspect the temporary support shoring, including temporary bracing and protective coverings, if applicable, for conformity with the working drawings. The Contractor's registered Civil Engineer shall certify in writing that the temporary support shoring, including temporary bracing and protective coverings, substantially conform to the details on the working drawings, and that the material and workmanship are satisfactory for the purpose intended. A copy of this certification shall be available at the site of the work at all times.

The Contractor's registered Civil Engineer shall be present at the site at all times when the culvert removal operations are in progress. The Contractor's registered Civil Engineer shall inspect the culvert removal operation and report in writing on a daily basis the progress of the operation and the status of the remaining structure. A copy of the daily report shall be available at the site of the work at all times. Should an unplanned event occur, the Contractor's registered engineer shall submit immediately to the Engineer for approval, the procedure of operation proposed to correct or remedy the occurrence.

22.03.02.06 Measurement

Concrete Structures Removal will not be measured.

Available Record Drawings showing the neat line dimensions of the existing structures are available for review by the contractor at the District office during normal working hours.

The Contractor is responsible for familiarizing itself with the actual field conditions. Attention is directed to existing structures to be removed as shown on the Drawings. The District cannot guarantee that the structures were constructed to the dimensions shown on the Record Drawings. No additional payment or deductions will be made for differences in dimensions between the Record Drawings and actual field conditions. The Contractor is responsible for familiarizing with the actual field conditions.

22.03.02.07 Payment

Full compensation for furnishing all labor, materials, tools, equipment and incidentals and for doing all work required for concrete structures removal, as

shown on the Drawings, as specified in these Specifications, as directed by the Engineer, and including design and construction of shoring systems shall be included in the lump sum price bid for CONCRETE STRUCTURES REMOVAL, Bid Item No. 5 and Bid Additive Item Nos. 61 and 87, if/when included in the awarded project by the District.

22.03.03 Asphalt Paving Removal

22.03.03.01 Scope of Work

Asphalt Paving Removal shall consist of the removal and disposal of existing asphalt paving as shown on the Drawings, as specified in these Specifications and as directed by the Engineer.

The Contractor shall make arrangements with local recyclers, within Santa Clara County, to recycle the pavement material removed during asphalt paving removal. Local recyclers may be found on the internet at www.recyclestuff.org.

22.03.03.02 Materials

No special requirements.

22.03.03.03 Placement

The contractor shall sawcut the existing pavement along the limit lines shown on the drawings in accordance with the provisions of Section 15 of the City of San Jose Standard Specifications. Pavement within the right of way shall be removed and disposed of at a recycling facility.
Miscellaneous items, wheel stops, curbs, base rock, etc. shall be legally disposed of off the right of way at a location provided by the Contractor. The disposal location must meet all federal, state, and local regulations and be approved by the Engineer.

22.03.03.04 Testing

No special requirements.

22.03.03.05 Submittals

No special requirements.

22.03.03.06 Measurement

Concrete Removal will not be measured.

22.03.03.07 Payment

Full compensation for furnishing all labor, materials, tools, equipment and incidentals for doing all work required for asphalt paving removal, including saw-cutting and disposal of miscellaneous items involved in the removal of asphalt paving, as shown on the Drawings, as specified in these Specifications, and as directed by the Engineer, shall be included in the lump sum price bid for CONCRETE REMOVAL, Bid Item No. 4 and Bid Additive Item Nos. 60, 86, and 123, if/when included in the awarded project by the District, and no separate payment will be made therefore.

22.03.04 Abandon, Removal, Salvage, Relocation of Existing Facilities

22.03.04.01 Scope of Work

This work shall consist of abandoning, removing, salvaging and/or relocating existing facilities which interfere with construction within the project area, as shown on the Drawings, as directed by the Engineer, and not specifically covered in the other Articles of this Section.

Removed facilities shall be disposed of, salvaged, relaid, reset, relocated or reconstructed as shown on the Drawings, as specified in these Specifications, and as directed by the Engineer.

22.03.04.02 Materials

Existing Facilities to be abandoned, removed, salvaged, and/or relocated shall include the following when not otherwise specifically included in the payment for any other item of work:

Miscellaneous Channel Items:

- minor structures
- drainage facilities
- miscellaneous drainage structures
- drainage outfalls, (concrete, block, rubble, or sacked concrete)
- storm drain pipes of various materials and sizes
- irrigation facilities and equipment
- sanitary sewer siphons
- utility and valve vaults
- other items shown on the plans or as directed by the Engineer

Miscellaneous Street Items:

- guardrail
- bus stops and their appurtenances
- traffic control signs and devices
- pipes of various materials and sizes
- traffic stripes and pavement markings
- fire hydrants
- utility vaults
- traffic signal equipment
- street lights
- other items shown on the plans or as directed by the Engineer

22.03.04.03 Placement

Abandon, removal, salvage, and relocation of existing facilities shall be performed per Section 15, "Existing Highway Facilities" of the State Specifications, except as modified herein. The Contractor shall make arrangements with local recyclers, with Santa Clara County, to recycle material removed. Local recyclers may be found on the internet at www.recyclestuff.org.

Removal operations shall be conducted in such a manner that the operation of remaining adjacent facilities or structures is stable at all times.

All removed material that is not to be recycled or reused in the work shall become the property of the Contractor and shall be legally disposed of outside the right of way at a location provided by the Contractor in accordance with the provisions in Section 7-1.13, "Disposal of Material Outside the Highway Right of Way" of the State Specifications. The disposal location shall meet all federal, state, and local regulations and be approved by the Engineer. Demolished material shall not be buried in structure backfill.

The sanitary sewer mains, and manholes at the existing Siphon at Station 144+50± shall be removed as shown on the plans and as directed by the Engineer.

The sanitary sewer main shown to be abandoned, including at the Siphon at Jackson Avenue, and at Capitol Avenue shall be abandoned in place per Section 15-2.02E "Drainage and Sewer Facilities" of the City of San Jose Standard Specifications as shown on the plans and as directed by the Engineer.

All removed sanitary sewer mains, manholes and appurtenances shall be disposed of per Article 6.34, "Regulated Material Management." Excavation and backfill shall conform to provisions of this Section 23, "Earthwork," of these Specifications.

22.03.04.04 Testing

No special requirements.

22.03.04.05 Submittals

Abandon, removal, salvage, and relocation of existing facilities work shall be included in the "clearing and grubbing proposed limits and phasing plan" required in Article 22.02 of these Specifications. Said plan shall be submitted and approved by the Engineer prior to the commencement of any work related to abandon, removal, salvage, and relocation of existing facilities.

The Contractor shall submit a recycling plan outlining all materials to be recycled. The plan shall indicate the material to be recycled and the location of the recycling center where the material will be delivered. The plan shall also indicate the materials to be removed that will not be recycled. The plan shall be submitted to the Engineer for review and approval prior to the commencement of any work in this Article.

22.03.04.06 Measurement

The quantities of abandon, removal, salvage, and relocation of existing facilities will not be measured.

Record Drawings of the existing facilities are not available. The Contractor is responsible for familiarizing itself with the actual field conditions. Attention is directed to existing facilities to be abandoned, removed, salvaged, or relocated, as shown on the Drawings. The District cannot guarantee that these facilities are constructed to the dimensions shown on the plans, nor that all such facilities are actually shown on the plan. No additional payment or deductions will be made for differences in dimensions, number, or type of facilities shown on the plans and the actual field conditions. The Contractor is responsible for familiarizing with the actual field conditions.

22.03.04.07 Payment

Full compensation for furnishing all labor, materials, tools, equipment and incidentals and for doing all work involved in abandon, removal, salvage and relocation of existing features as shown on the Drawings, as specified in these Specifications, and as directed by the Engineer, shall be included in the lump sum price bid for CLEARING AND GRUBBING, Bid Item No. 3, and Bid Additive Item Nos. 59, 85 and 122, if/when included in the awarded project by the District, and no separate payment will be made therefore.

22.03.05 Fence and Gate Removal and/or Salvage

22.03.05.01 Scope of Work

Removal of various heights of Chain link (CL) fence, wood fence and gates shall consist of the removal, recycle, salvage and/or disposal of existing fencing and gates, which interfere with the construction required under this Contract, and protection and security of existing private property should not be removed as shown on the Drawings, as specified in these Specifications, and as directed by the Engineer.

22.03.05.02 Materials

Existing fences to be removed shall become the property of the Contractor and shall be removed from the site at no additional cost to the District.

Existing gates to be removed conforming to requirements specified in Article 28 “Fences and Gates” of these Specifications and approved by the Engineer, may be stored by the Contractor and reused in project locations that require installation of gates.

22.03.05.03 Placement

Contractor shall remove existing fences and gates, shown on the Drawings to be removed, from the project site as directed by the Engineer

Separate posts set on top of floodwalls or structures shall be flattened on end and, shall be embedded in the post pocket with non-shrink grout per Article 29.07 “Non-Shrink Grout” of these Specifications, sleeves will not be required.

The Contractor’s attention is directed to Article 6.14 “Preservation of Property” of these Specifications.

22.03.05.04 Testing

Testing is not required.

22.03.05.05 Submittal

The removal and salvage of existing fences and gates shall be included in the “clearing and grubbing proposed limits and phasing plan” required in Article 22.02 of these Specifications. Said plan shall be submitted by the Contractor and approved by the Engineer prior to the commencement of any work related to removal and salvage of existing fences and gates.

The Contractor shall submit a recycling plan outlining all materials to be recycled. The plan shall indicate the material to be recycled and the location of the recycling center where the material will be delivered. The plan shall also indicate the materials to be removed that will not be recycled. The plan shall be submitted to the Engineer for review and approval prior to the commencement of any work in this Article.

22.03.05.06 Measurement

Quantities for fence and gate removal and/or salvage will not be measured.

22.03.05.07 Payment

Full compensation for furnishing all labor, materials, tools, equipment and incidentals and for doing all work involved in chain link fence and gate removal and/or salvage as shown on the Drawings, as specified in these Specifications, and as directed by the Engineer, shall be included in the price per linear foot bid for TYPE CL-6 GALVANIZED FENCE, Bid Item No. 34 and Bid Additive Item Nos. 70, 101 and 137, if/when included in the awarded project by the District, and no separate payment will be made therefore.

Full compensation for furnishing all labor, materials, tools, equipment and incidentals and for doing all work involved in wood fence removal and/or salvage as shown on the Drawings, as specified in these Specifications, and as directed by the Engineer, shall be included in the price per linear foot bid for WOOD PRIVACY FENCE, Bid Item No. 35, and no separate payment will be made therefore.

22.03.06 Monitoring Well Destructions – Bid Item Nos. 6, 62

22.03.06.01 Scope of Work

Monitoring Well Destructions shall consist of sealing monitoring wells that are shown on the Drawings to be abandoned in accordance with these Specifications. Monitoring well destruction must be completed within sixty (60) days once work for the constructional phase in which a well is located begins.

All well destruction activities must be performed by a Contractor that processes a California C-57 license and shall destroy wells in a manner that conforms with the District’s well destruction standards.

The Contractor shall conduct an investigation to determine the 1) condition of the existing monitoring wells, 2) details of construction, and 3) whether or not there are obstructions that will interfere with the sealing process.

The Contractor must fill out a Well Destruction Application Form for each well to be destructed and shall allow a processing period for permit application of ten (10) days. The Well Destruction Application Form could be obtained from the District by calling (408) 256-2607, extension 2660.

Two (2) standard monitoring well destruction methods typically accepted by the District are:

1. The well may be drilled out to the true total depth of the original boring and the resultant boring backfilled with approved sealing material; or

2. The well may be pressure grouted in place. During the pressure grouting procedure, a minimum of twenty-five pounds per square inch (25 lbs/in^2) must be maintained for five (5) minutes or until pumping refusal.

The Contractor shall note that in some cases, additional sealing requirements will be stipulated on the permit.

22.03.06.02 Materials

Sealing Materials

Pressure grouting must be completed using neat cement grout. No aggregate sealing materials may be used. Boreholes resulting from well drill-outs, may be backfilled with neat cement grout, 10-sack sand cement grout, or hydrated high solids 20 percent bentonite slurry. No bentonite chips or pellets are allowed.

Neat Cement Grout -- A neat cement grout shall be composed of one (1) bag of Portland cement to five (5) to seven (7) gallons of clean water. Up to five (5) percent bentonite clay can be added to cement mixture.

Sand Cement Grout – A sand cement grout shall be composed of not more than two (2) parts of sand and one (1) part of Portland cement to five (5) to seven (7) gallons of clean water.

Temporary Cover:

During periods when no work is being done on the well, such as overnight, or while waiting for sealing material to set, the well and surrounding excavation, if any, shall be covered. The cover shall be sufficiently strong and anchored well enough to prevent the introduction of foreign material into the well, and to protect the public from a potentially hazardous situation.

22.03.06.03 Placement

Preparation

Any obstruction that will interfere with sealing of the monitoring wells, shall be removed by cleaning out the hole (if possible). If the obstruction is in the form of hardware, rather than fill or cave material, and cannot be removed, a tremie pipe will have to pass beneath the obstruction in order to place sealing materials below the obstruction, eventually leaving the obstruction sealed in the well.

Where necessary, to insure that sealing material fills not only the well casing, but also any annular space or nearby voids, appropriate depths of the casing shall be perforated or otherwise punctured. A minimum 24-hour notice must be given to the District prior to placing the annular seal.

In drilled wells that have no conductor pipe installed, or a gravel-packed well without a surface seal, it may be necessary to remove some of the upper part of the casing. However, in some cases this can be done only as the well is filled. In dug wells, as much of the lining as possible shall be removed prior to filling.

For the protection of the seal at the land surface, and to facilitate the future use of the well site, a hole at least one (1) foot larger in diameter than the original drilled hole shall be excavated around the outside of the well casing to a depth of five (5) feet below the ground surface. The well casing is then to be cut off six (6) inches above the bottom of this excavation, and removed. During the sealing operation, the sealing material used to fill the well shall be allowed to spill over into the excavation and filled for a thickness of at least one (1) foot to form a cap which has a diameter of at least one foot greater than the diameter of the original drilled hole. This procedure shall result in the exposed edge of the casing being covered with six (6) inches of sealing material. After the sealing material has set, the excavation is to be filled with compacted native soil. In cases where the site is developed and/or a five (5) foot deep excavation around the well is not practical, a minimal excavation, which allows the sealing material to form a cap at least one (1) foot thick with enough additional space to allow for adequate surfacing, may be used.

Well Sealing

The following requirements shall be observed in placing sealing material in wells to be destroyed:

1. The well shall be completely filled with sealing material from the true bottom of the well up. Placement shall be by methods that prevent free fall, dilution, or separation of material.

2. Neat cement, cement grout, or concrete, shall be placed in the well from the true bottom of the well up to the surface. Concrete must not be used where tremie pipe and/or pressure grouting is required. In rotary-drilled wells or gravel-packed wells the seal is to be placed in the gravel pack through new perforations in order to prevent interaquifer flow either through the well or around the outside of the casing.

3. Where the head (pressure) producing flow is great, special care and special methods must be used to restrict the flow while placing the sealing material. In such cases the casing must be perforated opposite the area to be sealed, and the sealing material forced out under pressure into the surrounding formation.

4. If there is an annular space (gravel-packed wells) or a space between the drilled hole and the well casing, the well is to be perforated at appropriate depths, or the casing is to be removed before sealing. The size and spacing of the perforations shall provide sufficient openings through which grout can pass. A grouting (tremie) pipe shall be placed inside the well casing and the well filled from the bottom of the well up to the surface. The perforated portion shall be filled by a pressure-grouting method until refusal. This procedure is to apply also to the annular space between a conductor pipe and well casing. If an annular space exists between the drilled hole and the conductor pipe, it shall also be sealed. If the annular space is restricted, the grouting (tremie) pipe may be jetted in place.

5. If the annular space of a well has previously been sealed with an appropriate sealing material, the seal need not be disturbed. However, if possible, the seal is to be inspected to ensure that it conforms with the standards presented in this report. If the seal does not meet the standards presented in this report, the annular seal should be extended downward and the well filled with Portland cement grout.

6. To assure that the well is filled and that there has been no jamming or “bridging” of the sealing material, verification shall be made that the volume of material placed in the well installation at least equals the volume of the empty hole.

7. The sealing material shall be allowed to spill over into the excavation to form a cap at least one (1) foot thick.

After the well has been properly filled, including sufficient time for sealing material in the excavation to set, the excavation shall be backfilled with native soil.

22.03.06.04 Measurement

Monitoring wells will be measured per each, and may be of various depths.

22.03.06.05 Payment

Full compensation for furnishing all labor, materials, tools, equipment and incidentals, and for doing all work required to seal monitor well as shown on the Drawings, as specified in these Specifications, and as directed by the Engineer, shall be included in the unit price bid per each for MONITORING WELL DESTRUCTIONS, Bid Item No. 6 and Bid Additive Item No. 62, if/when included in the awarded project by the District.

22.04 Control of Water

22.04.01 Control of Water within Existing Course

22.04.01.01 Scope of Work

Control of Water will consist of doing all work and furnishing all labor, materials, and equipment required to design, construct, operate, and maintain measures to control water during the entire construction period. The Contractor shall note that periodic discharges from surface groundwater, subsurface groundwater, rainfall, blow-offs, storm drain discharges, and other discharges upstream can be expected any time of the year. It is the Contractor's responsibility to size the water control facilities/equipment such as to accommodate all flows/discharges, regardless of their source or the time of year in which they are experienced. Attention is directed to Article 16.01, "Safety," of these Specifications.

The construction site shall be kept free of standing water or excessively muddy conditions for proper execution of the construction work.

Groundwater pumping shall be avoided because of possible groundwater contamination. If groundwater pumping is necessary, and groundwater is determined to be contaminated by the Engineer, it shall be the Contractor's responsibility to obtain the necessary variances or permits and comply with the federal, state and local regulations for disposal of the groundwater.

Attention is directed to Section 18.01 "Compliance With NPDES General Permit" and 18.02 "Other Discharge Permits" of these Specifications, Appendix C of these Specifications regarding the requirements of the California Department of Fish and Game (CDFG) and San Francisco Bay RWQCB, and Appendix D of these Specifications for Lower Silver Creek BMPs regarding the requirements, rules,

regulations and conditions that govern the Contractor's operation in constructing water diversion and dewatering systems.

22.04.01.02 Materials

The Contractor shall make arrangements for furnishing all water required in connection with the work, including, but not limited to, water for dust control and compaction operations. The Contractor shall not use water from the Creek for this purpose at any time during construction.

22.04.01.03 Submittals

The control of water (including temporary diversions) and sediment control facilities shall be described in the Contractor's SWPPP.

22.04.01.04 Measurement

Control of water will not be measured.

22.04.01.05 Payment

Full compensation for furnishing all labor, materials, tools, equipment and incidentals, and for doing all work required for Control of Water, as specified in these Specifications, and as directed by the Engineer, shall be included in the lump sum or unit price bid for the item of work which requires control of water, and no additional payment will be made therefore.

22.04.02 Temporary Water Diversion

22.04.02.01 Scope of Work

A. Temporary water diversion work shall consist of furnishing, constructing, maintaining and later removing temporary water diversion system and dewatering for excavations and other associated construction activities.

B. Temporary water diversions shall be capable of sustaining the anticipated natural flow of the creek. The size, type and method to be used for the temporary water diversion system shall be determined and designed by the Contractor. The Contractor's temporary water diversion plan must include a fish relocation process and timing. The Contractor's temporary water diversion plan shall be submitted to the Engineer for review prior to any water diversion.

C. Depending on the channel configuration, water shall be allowed to either continue flowing downstream or shall be diverted around the work site in a pipe (pumped or gravity) or open channel.

D. All water shall be discharged in a non-erosive manner. Discharge method shall be sufficient to prevent erosion, minimize turbidity, and conform to the requirements contained within this section, and may include the following:

- Gravel or vegetated bars
- On hay bales
- On plastic
- On concrete
- In storm drains when equipped with filtering devices, etc.

E. Sumps or basins may also be used to collect water, where appropriate (e.g., in channels with low flows).

F. Where feasible and appropriate, diversion structures constructed of river-run gravel with less than 15% fines (per CDFG Permit) shall be installed on concrete sections of the channels. If cofferdams are used, they shall be installed within a hundred feet upstream and/or downstream from the extent of the work area.

G. In conjunction with diversion structures, pumps or gravity-fed pipe systems may be used to dewater sites. Whenever pumps and generators are used in the temporary water diversion system, such equipments shall be maintained according to manufacturers' specifications to regulate flows to prevent dry-back or washout conditions. Pumps shall be operated and monitored to prevent low water conditions, which could pump muddy bottom water, or high water conditions, which creates ponding. Pump intakes shall be provided with screening materials so as to prevent uptake of fish and other vertebrates. Follow CDFG guidelines including screening and approach velocity criteria when using pumps.

H. If bypass pipes are to be used, larger pipes shall be used to provide better flows in order to prevent increases in temperature and decreases in dissolved oxygen (DO). Bypass pipes may also be avoided by creating a low-flow channel or using other methods to isolate the work area.

I. All temporary diversion structures and related facilities shall be removed within 48 hours of completion of work at each zone. Flows shall be restored in a manner that minimizes erosion.

J. When temporary diversion structures and other related facilities are removed, the ponded flows will be directed into the low-flow channel within the work site to minimize downstream water quality impacts.

L. Flows shall gradually be restored to the channel to avoid a surge of water that would cause erosion or scouring. Passed flows can be slowly reintroduced in to the dewatered area by leaving a silt barrier in place to allow water to slow and drop sediment to the extent possible.

M. Removed temporary diversion structures and related facilities shall be disposed of outside the District's right of way.

N. Contractor shall coordinate temporary stream diversions and dewatering with the District to accommodate fish surveys and fish relocation. Contractor's schedule shall include provisions for time to perform fish survey (7 days) and fish relocation/rescue. The Contractor shall provide written notification to the Engineer a minimum of three (3) working days in advance of the fish survey and relocation work.

O. Biological staff with CDFG Scientific Collection Permits and a local Letter of Authorization issued by the CDFG Yountville office must be present to conduct rescue and relocation of vertebrates (i.e. fish). The District will provide these services to complete the fish rescue and relocation with support by the Contractor. The Contractor shall assume that the District can relocate fish from about 400-continuous linear feet per day as the Contractor diverts/removes water from the creek. The Contractor shall supply at least two persons to help relocate the fish.

P. Temporary Diversions (i.e. bypass piping) must accommodate utility relocation work.

22.04.02.02 Testing

Water quality monitoring is required. Copies of the permits are included in the Appendices of these Specifications.

22.04.02.03 Submittals

90 days before water diversion is needed, the Contractor shall submit proposed temporary water diversion plans to Engineer for review and approval. The Contractor shall certify with the submittal that the implementation of a water diversion system will not cause extension of overall project schedule. The Engineer will expedite the review time following receipt of the submittal.

22.04.02.04 Measurement

Temporary water diversion will not be measured.

22.04.02.05 Payment

Full compensation for furnishing all labor, materials, tools, equipment and incidentals, and for doing all work required for temporary water diversion and dewatering including water quality testing accommodating fish surveys and relocations, as shown on the Drawings, as specified in these Specifications, and as directed by the Engineer, shall be included in the lump sum or unit price bid for the item of work which requires temporary water diversion, and no additional payment will be made therefore.

22.05 Erosion Control - Temporary Silt Fence and Fiber Roll

22.05.01 Scope of Work

A. This work includes installing, maintaining, and removing temporary silt fence as shown on the Drawings, per these Specifications, and as directed by the Engineer. The SWPPP prepared for the project by the Contractor must describe and include the use of temporary silt fence and fiber roll as a water pollution control practice for sediment control.

B. This work is included in "Compliance With NPDES General Permit", Article 18.01 of these Specifications.

22.05.02 Materials

A. Silt Fence Fabric – Geosynthetic fabric for temporary silt fence must consist of one of the following:

1. Polyester
2. Polypropylene
3. Combined polyester and polypropylene

B. Sample under ASTM D 4354, Procedure

C. Test under ASTM D 4759. All properties must be based on Minimum Average Roll Value (MARV).

D. Identify, store, and handle under ASTM D 4873.

E. Protect geosynthetics from moisture, sunlight, and damage during shipping and storage. Label each unit with the manufacturer's name, identifying information, and product identification.

F. Silt fence fabric must comply with the parameters shown in the following table:

Property	ASTM Designation	Specification	
		Woven	Non-Woven
Grab breaking load 1-inch grip, lb, min. in each direction	D 4632	120	120
Apparent elongation Percent, min., in each direction	D 4632	15	50
Water Flow Rate Max. average roll value, gallons per minute/square foot	D 4491	10-50	100-150
Permittivity 1/sec., min.	D 4491	0.05	0.05
Apparent opening size Max. Average roll value, U.S. Standard sieve size	D 4751	30	30
Ultraviolet Degradation Percent of original unexposed grab breaking load 500 hr., minimum	D 4595	70	

22.05.03 Posts

A. Posts must be wood or metal.

B. Wood posts must be:

1. Untreated fir, redwood, cedar, or pine and cut from sound timer

2. Straight and free of loose or unsound knots and other defects that would render the stakes unfit for use

3. Pointed on the end to be driven into the ground

4. At least 2” x 2” in size, and 4 feet long

B. Metal posts must:

1. Be made of steel.

2. Have a “U,” “T,” “L,” or other cross sectional shape that can resist failure from lateral loads.

3, Be pointed on the end to be driven into the ground.

4. Weigh at least 0.75 –pound per foot.

5. Be at least 4 feet long.

5. Have a safety cap attached to the exposed end. The safety cap must be orange or red plastic and fit snugly to the metal post.

22.05.04 Fiber Rolls

A. Fiber Rolls must be Type 1 or Type 2

B. If specified, Type 1 fiber roll must be:

1. Made from an erosion control blanket:

1.1. Classified by the Erosion Control Technology Council (ECTC) as ECTC 2D

1.2. With a Universal Soil Loss Equation (USLE) C-Factor of not more than 0.20 at a 2:1 (horizontal: vertical) slope

1.3. Capable to withstand a maximum shear stress of 1.75 pounds per square foot under ASTM D 6460

1.4. With a minimum tensile strength of 75 pounds per foot under ASTM D 5035

1.5. With top and bottom surfaces covered with extruded photodegradable plastic netting or lightweight non-synthetic netting

1.6 That complies with one of the following:

1.6.1. Double net straw and coconut blanket with 70 percent straw and 30 percent coconut fiber

1.6.2. Double net excelsior blanket with 80 percent of the wood excelsior fibers being 6 inches or longer

2. Rolled along the width

3. Secured with natural fiber twine every 6 feet and 6 inches from each end

4. Finished to be either:

4.1. From 8 to 10 inches in diameter, from 10 to 20 feet long, and at least 0.5 pounds per linear foot

4.2. From 10 to 12 inches in diameter, at least 10 feet long, and at least 2 pounds per linear foot

5. If specified, Type 2 fiber roll must:

5.1. Be filled with rice or wheat straw, wood excelsior, or coconut fiber

5.2. Be covered with a photodegradable plastic netting or a biodegradable jute, sisal, or coir fiber netting

6. Have the netting secured tightly at each end

7. Be finished to be either:

7.1. From 8 50 10 inches in diameter, from 10 to 20 feet long, and at least 1.1 pounds per linear foot

7.2. From 10 to 12 inches in diameter, at least 10 feet long, and at least 3 pounds per linear foot

22.05.05 Wood Stakes

A. Wood stakes must be:

1. Untreated fir, redwood, cedar, or pine and cut from sound timber

2. Straight and free of loose or unsound knots and other defects which would render the stakes unfit for use

3. Pointed on the end to be driven into the ground

B. For fiber roll, wood stakes must be at least 1” x 1” x 24” in size

22.05.06 Placement

A. Silt fence must be:

1. Constructed with silt fence fabric, posts, and fasteners

2. Prefabricated or assembled at the job site

B. Silt fence fabric must be attached to posts using these methods:

1. If prefabricated silt fence is used, posts must be inserted into sewn pockets

2. If assembled on the job site:

   a. If wood posts are used, fasteners must be staples or nails
   b. If steel posts are used, fasteners must be tie wires or locking plastic fasteners

   c. Spacing of the fasteners must be no more than 8 inches apart

C. Place silt fence approximately parallel to the slope contour. For any 50-foot section of silt fence, do not allow the elevation at the base of the fence to vary more than 1/3 of the fence height.

D. Install silt fence by:

1. Placing the fabric around the fiber roll and securing it as specified in the installation of the fiber roll.

2. Securing with posts placed on the downhill side of the fabric

E. If Contractor reinforces the silt fence fabric with wire or plastic mesh, Contractor shall increase the post spacing to a maximum of 10 feet. The field-assembled reinforced silt fence must be able to retain saturated sediment without collapsing.

F. Connect silt fence sections by:

1. Joining separate sections of silt fence to form reaches that are no more than 500 feet long

2. Securing the end posts of each section by wrapping the tops of the posts with at least two wraps of 16-gage diameter tie wire

3. Ensuring that each reach is a continuous run of silt fence from end to end or from an end to an opening, including joined panels

G. If Contractor mechanically pushes the silt fence fabric vertically through the soil, Contractor must demonstrate that the silt fence fabric will not be damaged and will not slip out of the soil, resulting in sediment passing under the silt fence fabric.

22.05.07 Fiber Roll

A. Before placing fiber roll, remove obstructions including rocks, clods, and debris greater than one inch in diameter from the ground.

B. Place fiber roll approximately parallel to the slope contour. For any 20 foot section of fiber roll, do not allow the fiber roll to vary more than 5 percent from level.

C. Install fiber roll by:

1. Placing in a furrow that is from 2 to 4 inches deep

2. Securing with wood stakes every 4 feet along the length of the fiber roll

3. Securing the ends of the fiber roll by placing a stake 6 inches from the end of the roll

4. Driving the stakes into the soil so that the top of the stake is less than 2 inches above the top of the fiber roll

22.05.08 Maintenance

A. Maintain temporary silt fence and fiber roll to provide sediment holding capacity and to reduce runoff velocities.

B. Remove sediment deposits, trash, and debris from temporary silt fence as needed or when directed by the Engineer. If removed sediment is deposited within project limits, it must be stabilized and not subject to erosion by wind or water. Trash and debris must be removed and disposed of as specified in Section 7-1.13, "Disposal of Material Outside the Highway Right of Way," of the State Standard Specifications.

C. Maintain temporary silt fence by:

1. Removing sediment from behind the silt fence when sediment is 1/3 the height of the silt fence above ground.

2. Repairing or adjusting the silt fence when rills and other evidence of concentrated runoff occur beneath the silt fence fabric.

3. Repairing or replacing the silt fence fabric when it becomes split, torn, or unraveled.

4. Replacing or adjusting the fiber roll when rills and other evidence of concentrated runoff occur beneath the fiber roll.

5. Repairing or replacing the fiber roll when they become split, torn, or unraveled.

6. Adding stakes when the fiber roll slumps or sags.

7. Replacing broken or split wood stakes.

D. Repair temporary silt fence and fiber roll within 24 hours of discovering damage unless the Engineer approves a longer period.

E. If Contractor vehicles, equipment, or activities disturb or displace temporary silt fence and fiber roll, repair temporary silt fence and fiber roll at Contractor expense.

F. The District does not pay maintenance costs for cleanup, repair, removal, disposal, or replacement due to improper installation or Contractor negligence.

22.05.09 Removal

When the Engineer determines that temporary silt fence and fiber roll is not required, Contractor shall remove and dispose of fence under Section 7-1.13, "Disposal of Material Outside the highway Right of Way," of the State Standard Specifications.

Ground disturbance, including holes and depressions, caused by the installation and removal of the temporary silt fence must be backfilled and repaired under Section 15-1.02, "Preservation of Property," of the State Standard Specifications.

22.05.10 Testing

There are no special requirements. However, Contractor shall periodically inspect and maintain the silt fence in accordance with the project approved SWPPP and the California Stormwater BMP Handbook, SE-1.

22.05.11 Submittals

Submit a Certificate of Compliance as specified in Section 6-1.07, "Certificates of Compliance" of the State Standard Specifications for silt fence fabric and fiber roll.

22.05.12 Measurement

Temporary silt fence and fiber roll will not be measured.

22.05.13 Payment

Full compensation for furnishing all labor, materials, tools, equipment, and incidentals, and for doing all the work involved in constructing the temporary silt fence and fiber roll, complete in place, including maintaining the fence, removal of materials, cleanup and disposal of retained sediment and debris, and backfilling and repairing holes, depressions and other ground disturbance, as shown on the Drawings, as specified in these Specifications, and as directed by the Engineer shall be included in the lump sum bid price for COMPLIANCE WITH NPDES GENERAL PERMIT, Bid Item No. 1A and Bid Additive Item Nos. 57A, 83A and 120A, if/when included in the awarded project by the District, and no separate payment will be made therefore.

Costs incurred for repair or replacement of deteriorated or damaged materials during construction and the 3-year establishment maintenance period shall be at the Contractor's expense, and no additional payment will be made therefore.

22.06 Erosion Control Hydroseeding – Bid Item No. 7

22.06.01 Scope of Work

Erosion Control Hydroseeding shall consist of all work and materials necessary including water to furnish and place hydroseeding on the left side of the channel (landscaping side) as required for erosion control during construction to conform to the requirements in SWPPP, the project BMP's these Specifications, and as directed by the Engineer.

This item does not include "Revegetation Hydroseeding", which is specified in Article 41.10, of these Specifications.

The Erosion Control Hydroseed shall be pre-germinated by October 15 of the construction year for which it is to be applied.

Seed germination will be the responsibility of the Contractor by means of manual or temporary irrigation as necessary.

22.06.02 Materials

<u>Erosion Control Hydroseed Mixture</u>

The Erosion Control Hydroseed seed mixture shall consist of the following pure live seed (pls) per acre:

40lbs	Elymus X triticum, Regreen hybrid wheatgrass
12lbs	Bromus carinatus, CA Brome
8lbs	Lupinus succulentus, Arroyo Lupine
4lbs	Vulpia microstachys, 6 weeks fescue

*Pure live seed= (% of seed lot x % Germination rate of species)/100.

Percent purity and percent germination are given by the manufacturer and shall be submitted to the Engineer by the Contractor upon delivery.

1. 2 ton per acre of straw mulch

2. 75 pounds per acre of tackifier

3. 350 lbs per acre of 16- 20-0 fertilizer

4. Coloring agent to be a biodegradable, nontoxic coloring agent free from copper, mercury, and arsenic.

Seed, as supplied by the Contractor, shall be from San Francisco Bay Area ecotypes, when available.

Potential sources of seed mixes are: Pacific Coast Seed, 6144-A Industrial Way, Livermore, CA 94550, (925) 373-4417; and ConservaSeed (916) 776-1200.

Seed shall be kept in a cool, shaded place until utilized. Contractor shall request seed delivery just before installation and only in the amounts that can be planted that day to prevent heating and desiccation.

22.06.03 Soil Preparation

Prior to Erosion Control Hydroseeding application, the area to receive the Erosion Control Hydroseed shall be roughened as follows:

- Slopes greater than 2:1: roughen, by use of a crimping/punching type roller. A sheep's foot roller shall not be used. Track walking shall only be allowed where other methods are impractical. Roughen slopes by running equipment perpendicular to slope contours.

- Slopes less than 2:1 and flat surfaces: roughen by scarifying to a depth of 4-inches. Surfaces shall be disked or otherwise worked to break all clods to 2-inches or smaller in size.

Areas to be hydroseeded for erosion control shall be free of weed plants.

22.06.04 Placement

Erosion Control Hydroseeding Application and Preparation:

Erosion Control Hydroseeding shall be placed in all areas of disturbed soil excluding the creek bed, Rip Rap areas, and the Maintenance Road, as directed by the Engineer. The Contractor shall accompany the Engineer to confirm the Erosion Control Hydroseeding limits.

The Contractor shall plan and execute the Erosion Control Hydroseeding so as to allow the seeds to establish and grow prior to October 15, of the construction year.

Erosion Control Hydroseed slurry mixture shall consist of seed, straw mulch, tackifier, fertilizer, water and coloring agent. It shall be applied in one (1) operation.

Mixing shall be performed in a tank, with a built-in continuous agitation and recirculation system, of sufficient operating capacity to produce homogeneous slurry and a discharge system that will apply the slurry to the designated areas at a continuous and uniform rate.

The slurry preparation shall take place at the project site and shall begin by adding water to the tank when the engine is at half throttle. When the water level has reached the height of the agitator shaft, good recirculation shall be established, and at this time the seed, mulch, and fertilizer shall be added. Spraying shall commence immediately when the tank is full.

Contractor shall spray designated areas with the slurry in a sweeping motion, in an arched stream, until a uniform coat is achieved and the material is spread at the required rates per acre.

At all times, materials will be kept uniformly mixed in the hydroseed tank during the duration of the application operation. The seed, mulch, and fertilizer shall be kept suspended in the hydroseed tank such that all of the components are applied evenly.

In applying the slurry, care shall be taken to provide even and uniform coverage. Overspray and other residue or trash from the hydroseeding operations shall be cleaned and removed from the site on the same day of application.

A slurry mixture, which has not been applied within four (4) hours after mixing, shall be rejected and replaced at the contractor's expense.

Erosion Control Hydroseeding operations shall not take place if temperatures are over ninety degrees Fahrenheit (90ºF).

After Erosion Control Hydroseeding, place erosion control blanket on top of hydroseeded surface once hydroseed has cured for a minimum of 24 hours. The hydroseed needs to be cured prior to the blanket installation to eliminate seed disturbance during blanket installation. It is the Contractors responsibility to ensure appropriate curing time due to weather and protect seed coverage on slopes while installing the blanket. Fasten blanket to soil over all areas to receive hydroseed in accordance to Article 22.07 "Erosion Control Blanket".

The Contractor shall irrigate the Erosion Control Hydroseeded areas if required by weather conditions and to ensure growth until sufficient establishment. Washed areas or eroded areas shall be repaired by restoring finished grades and re-seeding as needed.

22.06.05 Testing

No special requirements.

22.06.06 Submittals

Contractor shall submit samples to the Engineer of all Contractor furnished materials, including seed mix certificate and fertilizer product information for approval forty-eight (48) hours prior to commencing preparation. Erosion Control Hydroseed shall not be applied until approved by the Engineer.

22.06.07 Measurement

Measurement for Erosion Control Hydroseeding shall be per square foot of a completely supplied and installed Erosion Control Hydroseeded area on the left side of the Channel installed by the Contractor and approved by the Engineer, as measured in the field.

22.06.08 Payment

Full compensation for furnishing all labor, materials, tools, equipment and incidentals and for doing all work required to install Erosion Control Hydroseeding on the left side of the Channel, as shown on the Drawings, as specified in these Specifications, and as directed by the Engineer, for the Base Bid only, shall be included in the unit price per square foot for EROSION CONTROL HYDROSEEDING, Bid Item No. 7.

Costs incurred for repair or replacement of bare, sparse or damaged areas during construction for the Base Bid only, shall be included in the lump sum price bid for COMPLIANCE WITH NPDES GENERAL PERMIT, Bid Item No. 1A, and no separate payment will be made therefore.

Full compensation for furnishing all labor, materials, tools, equipment and incidentals and for doing all work required to install Erosion Control Hydroseeding on the left side of the Channel as shown on the Drawings, as specified in these Specifications, and as directed by the Engineer, for Bid Additive 1, 2, or 3 if/when included in the awarded project by the District shall be included in the lump sum price bid for COMPLIANCE WITH NPDES GENERAL PERMIT, Bid Item Nos. 57A, 83A, and 120A, and no separate payment will be made therefore.

Costs incurred for repair or replacement of bare, sparse or damaged areas of the Erosion Control Hydroseeding on the left side of the Channel, during construction for the Bid Additive 1, 2, and/or 3 if/when included in the awarded project by the District shall be included in the lump sum price bid for COMPLIANCE WITH

NPDES GENERAL PERMIT, Bid Additive Item Nos. 57A, 83A and 120A, if/when included in the awarded project by the District, and no separate payment will be made therefore.

22.07 Erosion Control Blanket - Bid Item No. 8

22.07.01 Scope of Work

This work includes installing Erosion Control Blanket and shall consist of all work and materials necessary to furnish and place rolled erosion control netting, complete in place as required for erosion control during construction to conform to the requirements in SWPPP, the project BMP's, these Specifications, and as directed by the Engineer.

This item does not include "Revegetation Blanket", which is specified in Article 41.11.

22.07.02 Materials

Erosion Control Blanket shall be C125 BN double net coconut blanket manufactured by North American Greet or approved equal.

The long-term coconut fiber erosion control blanket shall be a machine-produced 100% biodegradeable blanket with a 100% coconut fiber matrix with a functional longevity of up to 24 months.

The blanket shall be of consistent thickness with the coconut fiber evenly distributed over the entire area of the blanket. The blanket shall be covered on the top and bottom sides with 100% biodegradable woven, natural, organic fiber netting. The top netting shall consist of machine directional strands formed from two intertwined yarns with cross directional stands interwoven through the twisted machine strands (commonly referred to as a Leno weave) to form an approximate 1.27 x 2.54 cm mesh. The blanket shall be sewn together on 3.81 cm centers (50 stitches per roll width) with biodegradable thread.

Erosion Control Blanket shall meet requirements established by the Erosion Control Technology Council (ECTC) Specification.

The coconut fiber Erosion Control Blanket shall have the following properties:

Matrix: 100% Coconut Fiber (0.50 lb/yd^2)

Netting: Top – Leno woven 100% biodegradable organic jute fiber (9.30 lbs/1,000ft^2 [4.50kg/100m^2] approximate weight)
Bottom – 100% biodegradable organic jute fiber (7.70 lbs/1000 ft2 [3.76 kg/100m2] approximate weight)

Thread: Biodegradable

22.07.03 Fasteners

Biodegradable wood stakes shall be 12 inch Eco-STAKETM by North American Green or equal.

The stakes shall be 100% biodegradable and a "1" – shaped hardwood pin designed to safely and effectively secure erosion control blankets. The wood stake must exhibit ample rigidity to enable being driven into hard ground, with sufficient flexibility to resist breakage. The wood stake shall be the north American Green Eco-STAKE or approved equal, with the following dimensions:

Leg Length: 11.00 in. (27.94 cm)
Head Width: 1.25 in. (3.18 cm)
Head Thickness: 0.40 in. (1.02 cm)
Leg Width: 0.60 in. (1.52 cm) (tapered to point)
Leg Thickness: 0.40 in. (1.02 cm)
Total Length: 12.00 in. (30.48 cm)

22.07.04 Submittals

Submit a Certificate of Compliance under Section 6-1.07, "Certificates of Compliance" of the State Standard Specifications for:

1. Netting
2. Fastener
3. Anchors

22.07.05 Testing

No testing is required for Erosion Control Blanket.

22.07.06 Placement

Prior to placing and securing blankets review all installation, lapping and staking details and procedures with engineer for approval. Control Blanket shall be

installed within 4-hours of application of the Erosion Control Hydroseeding (see Article 22.06). The blanket shall be carefully placed as to not disturb the hydroseeding. Place and secure the blanket per the manufacturers details. Use a trench to secure and bury a 1-foot section of the top edge of the blanket with a flap of 12”-18” to fold back over the top of the trench. In the bottom of the trench secure the blanket with stakes 12” on center. Place the blankets end over end Shingle style in the direction of the flow of the channel and bank with an overlap of 4”-6”. Provide stapling and staking per manufacturer minimum recommended spacing.

22.07.07 Measurement

Measurement for erosion control blanket shall be per square foot of a completely supplied and installed erosion control blanket by the Contractor and approved by the Engineer as measured in the field.

22.07.08 Payment

Full compensation for furnishing all labor, materials, tools, equipment and incidentals and for doing all work required to install Erosion Control Hydroseeding, as shown on the Drawings, as specified in these Specifications, and as directed by the Engineer, for the Base Bid only, shall be included in the unit price per square foot for EROSION CONTROL BLANKET, Bid Item No. 8.

Costs incurred for repair or replacement of bare, sparse or damaged areas during construction for the Base Bid only, shall be included in the lump sum price bid for COMPLIANCE WITH NPDES GENERAL PERMIT, Bid Item No. 1A, and no separate payment will be made therefore.

Full compensation for furnishing all labor, materials, tools, equipment and incidentals and for doing all work required to install Erosion Control Blanket as shown on the Drawings, as specified in these Specifications, and as directed by the Engineer, for Bid Additive 1, 2, or 3 if/when included in the awarded project by the District shall be included in the lump sum price bid for COMPLIANCE WITH NPDES GENERAL PERMIT, Bid Additive Item Nos. 57A, 83A, and 120A and no separate payment will be made therefore.

Costs incurred for repair or replacement of damaged areas during construction for the Bid Additive 1, 2, and/or 3 if/when included in the awarded project by the District shall be included in the lump sum price bid for COMPLIANCE WITH NPDES GENERAL PERMIT, Bid Additive Item Nos. 57A, 83A and 120A, if/when included in the awarded project by the District, and no separate payment will be made therefore.

23 EARTHWORK

The Contractor's attention is directed to Article 15.02 "Utilities", 15.03 "Protection of Existing Improvements" and 15.04 "Site Review and Monitoring of Project Limits and Vicinity" of these Specifications.

All Earthwork shall be in accordance with the findings and recommendations in the "Geotechnical Investigation Report for Lower Silver Creek Reaches 4-6A" by Parikh Consultants, Inc., dated May 2010, (Parikh 2010).

23.01 Channel Excavation and Embankment—Bid Item Nos. 9, 63, 88, 124

23.01.01 Channel Excavation

23.01.01.01 Scope of Work

A. Channel excavation shall consist of all work and materials necessary performed after clearing and grubbing; to excavate, transport, recycle, and dispose of surplus and unsuitable materials, uniformly grading of all areas in preparation for placement of Erosion Control Blanket, rock slope protection (grouted and ungrouted), Lateral Grade Control Structures, maintenance road, access ramps, revegetation and landscaped areas, and for all other miscellaneous excavation and grading not included in other items, to the lines and grades as shown on the Drawings, as specified in these Specifications and as directed by the Engineer.

B. The Contractor must limit the extent of channel excavation activity each year to only the portion of the creek where flood control improvements will be completed and by the dates specified in Article 11.06.02 "Detailed Schedule of Work", Item B4 of that year. Channel excavation must not begin until the Engineer has received and approved the preconstruction quantity measurement survey data provided by the Contractor, which is to be performed after the completion of dewatering, clearing, and grubbing in the areas to be excavated. Prior to any excavation activities, the Contractor shall also submit a "Proposed Excavation and Recycling Plan" to the Engineer for review and approval.

C. Channel excavations shall conform to Parikh 2010 and to the applicable provisions of Section 23, "Earthwork", and Section 19-2, "Roadway Excavation", of the State Specifications except as modified by these Specifications. The provisions of Section 19-1.04, "Removal and Disposal of Buried Man-Made Objects", of the State Specifications shall not apply. The Contractor's attention is directed to Article 23.06, "Unsuitable Material," of these Specifications for removal and disposal of unsuitable material.

D. Contractor shall note that Channel excavation will take place in close proximity to residential properties and structures.

E. All excavations shall be closely monitored during construction to detect any evidence of instability and distress to these adjacent structures and properties per Article 15.04 of these Specifications. In addition, the following precautions shall be taken:

- No construction access, staging, parking, or storage shall be permitted within 5-feet of adjacent properties or top of bank.

- Heavy equipment shall be kept five (5) feet away from the edge of any pool or structure.

- Use of vibratory equipment or any equipment that shakes the ground shall be minimized in the vicinity of swimming pools or structures.

- Contractor shall not over-excavate in vicinity of structures or swimming pools, except as directed by the Engineer.

F. The Contractor shall be responsible for all costs associated with determining with certainty, including by means of soil testing, whether the material is acceptable at the Contractor's preferred disposal site.

G. In the event that excavated materials appear to be contaminated with regulated materials other than those described in the Geotechnical Investigation Report for Lower Silver Creek Reaches 4-6A, prepared by Parikh Consultants, Inc., dated May 2010 (Parikh May 2010 Report), or appear to have contaminant concentrations significantly greater than those described in the Parikh May 2010 Report, as determined by field observation and/or the Contractor's initial soil tests, additional costs resulting from this situation, including though not necessarily limited to additional testing, stockpiling, double handling, special disposal, and loss of Contractor rate of production, shall be paid for by the District per Article 5.06 Changed Site conditions.

H. The discovery of a sensitive species nesting bird or other form of wildlife, that affects the Contractor's operation, will be handled per Article 5.06, "Changed Site Conditions."

I. Channel excavation does not include the removal of concrete rubble, sacked concrete buried man-made objects or concrete blocks on the bottom or sides of the existing creek channel. Removal of such material is included in CLEARING AND GRUBBING, Bid Item No. 3.

23.01.01.02 Materials

Areas that have been over-excavated during channel excavation, except where shown on the Drawings or as directed by the Engineer, shall be backfilled with suitable materials in accordance with Article 23.01.02, “Channel Embankment,” of these Specifications, at the Contractor's own expense and at no extra cost to the District.

The Contractor shall provide shoring required for channel excavation in accordance with Article 23.10, “Shoring,” of these Specifications.

23.01.01.03 Placement

All channel excavation shall be made to finish grade as shown on the Drawings and specified in these Specifications. Excavation shall conform with the Geotechnical Investigation (Parikh 2010).

The finish grade surface elevations shall conform to the tolerances set forth in Article 14.04 “Construction Survey” of these Specifications.

Maintenance Roads

Backfill material used in over-excavated maintenance road areas shall be compacted (ASTM D1557) as follows:

- Below 1 ft. of finished grade 90 percent
- Within 1 foot of finished grade 95 percent

Non-Planting Areas

Backfill material used in over-excavated non-planting areas (i.e. maintenance roads) that are not shown on the Drawings or as directed by the Engineer shall be compacted to a relative compaction of 90 percent in accordance with ASTM D1557 Standard Laboratory compaction at the Contractor’s expense.

Planting Areas

The Backfill material used in over-excavated planting areas (i.e. top of bank and vegetated bench) that are not shown on the Drawings or as directed by the Engineer shall be compacted to a relative compaction ranging between 88 to 90 percent at the Contractor’s expense.

All over-compacted areas should be decompacted to the compaction range specified per the direction of the Engineer at the Contractor’s expense.

Except as noted herein, all excess material, or excavated materials, determined by the Engineer to be not acceptable for channel embankment, shall be removed from the project site and recycled. If recycling of material is not available, the material shall be disposed off the right of way in an area provided by the Contractor that meets all local, state, and federal requirements.

Removal, disposal and replacement of unsuitable material shall conform to the requirements of Article 23.06, "Unsuitable Material," of these Specifications.

No debris, exposed tree roots, or other objectionable materials shall be permitted in the final section.

23.01.01.04 Testing

No Special Requirements

23.01.01.05 Submittals

The Contractor shall submit the "Proposed Excavation and Recycling Plan," to the Engineer for review and approval, prior to any channel excavation work. The Contractor's recycling plan shall outline all materials to be recycled. The plan shall include the material to be recycled and the location of the recycling center where the material will be delivered. The plan shall also indicate the materials to be removed that will not be recycled.

Contractor's attention is directed to Article 5.14, "Excavation Safety Plans," of these Specifications.

The Contractor's attention is directed to Article 23.10, "Shoring", of these Specifications, for submittals required for all shoring systems to be used during channel excavation.

23.01.01.06 Measurement

The quantities of channel excavation shown on the Proposal Form are approximate only and the Cross Sections included in the Drawings are for informational purposes only. Measurement of excavation quantities for payment shall be per Article 14.04 "Construction Survey" of these Specifications.

23.01.01.07 Payment

Full compensation for furnishing all labor, materials, tools, equipment and incidentals, and for doing all work required for channel excavation, as shown on

the Drawings, as specified in these Specifications and as directed by the Engineer, including off haul, testing, disposal, disposal fees, and design and construction of shoring systems if required, shall be included in the unit price bid per cubic yard for CHANNEL EXCAVATION AND EMBANKMENT, Bid Item No. 9 and Bid Additive Item Nos. 63, 88 and 124, if/when included in the awarded project by the District, and no separate payment will be made therefore.

Full compensation for furnishing all labor, materials, tools, equipment and incidentals, and for doing all work necessary to provide survey for excavation quantity measurement shall be included in the prices bid for various items of work per Section 4.04 "Construction Survey", and no additional payment will be made therefore.

23.01.02 Channel Embankment

23.01.02.01 Scope of Work

The Contractor is hereby notified that some areas within the Creek will need to be filled and compacted to the grading plane shown on the Drawings. Channel Embankment shall consist of all work, materials, equipment, and incidentals necessary to furnish, transport, place, and compact suitable native soils for backfilling areas of Lower Silver Creek as shown on the Drawings, as specified in these Specifications, and as directed by the Engineer.

Channel embankment shall conform to the applicable provisions of Section 19-6, Embankment Construction, of the State Specifications, except as modified by these Specifications.

All work, material, equipment, and incidentals necessary to conform to the requirements of the Geotechnical Investigations Report by Parikh Consultants, Inc. dated May 2010 (Parikh 2010) are part of Channel Embankment Scope of Work.

23.01.02.02 Materials

The use of native soils excavated used from channel excavations within the project limits for channel embankment shall conform to applicable provisions of Section 19-7.02, Imported Borrow, of the State Specifications. The material shall have the following characteristics:

A. At least 40% (by weight) of the soil materials passing US Standard Sieve No. 200

B. Plasticity Index (PI) in the range of 10 to 20

C. Liquid limit not to exceed 40

D. The soil should not contain rocks or lumps over 3 inches in the greatest dimension

E. No more that 10% of the soil particles should be greater than 1.5 inches in the greatest dimension

F. Soil shall be free of organic matter, trash, concrete rubble and other deleterious material.

"Existing fill" and "existing soil", where shown on the Drawings shall mean the native soil suitable for channel embankment described in this Section.

Native soils obtained from channel excavation and structural excavation within the project limits that are used for channel embankment, shall meet, but not be limited to, the following standards:

A. Capable of being compacted to a minimum of 90 percent relative compaction in accordance with ASTM D1557 Standard Laboratory compaction, or as otherwise directed by the Engineer, using ordinary methods at optimum moisture content.

B. Have compaction moisture content within the range of -2% to +3% of the optimum moisture content.

C. Uncontaminated by regulated materials.

In areas where high groundwater creates soft pumping conditions, the Contractor may over-excavate to remove the soft/loose soil materials identified by the Engineer and backfill with granular material wrapped in geotextile fabric to bridge the foundation soils prior to placement of Channel Embankment. Geotextile fabric shall meet the requirements of Section 23.01.09 "Geotextile Fabric" of these Specifications

The granular material should conform to the following requirements:

Sieve Size	**Percentage Passing**
6-inch	100%
2-inch	0-50%
¾-inch	0-10%

23.01.02.03 Placement

Channel Embankment must not be placed in standing water or when the subgrade is excessively wet without the written approval of the Engineer.

After clearing and grubbing in accordance with Article 22.02, "Clearing and Grubbing," of these Specifications, all surfaces to receive channel embankment (fill) shall be stripped to a minimum depth of 6 inches as directed by the Engineer, moisture conditioned, and mechanically compacted to a relative compaction of not less than 90 percent per Parikh 2010. The compaction moisture content shall be within the range of -2% to +3% of the optimum moisture content, as determined by ASTM D1557 standard. The soils shall be mechanically compacted to at least 90 percent relative compaction below 1 foot of the foundation subgrade and to at least 95 percent within 1 foot of the foundation subgrade, in accordance with ASTM D1557. The ASTM D1557 laboratory compaction tests should be performed at the time of construction to provide a proper basis for compaction control

Channel Embankment at planting areas, such as areas within the top of bank, the vegetated bench and the 1.5:1 sloped revegetation areas, and other areas which are shown on the Drawings as the areas to be landscaped or hydroseeded, shall be compacted to between 88 and 90 percent relative compaction based on ASTM D1557 Standard.

Any necessary watering, aeration, or processing of fill material, or bridging of foundation soils, to obtain the required compaction shall not constitute an extra item of work and no direct or additional payment will be made therefore.

Ponding or Jetting to achieve compaction will not be permitted.

Channel Embankment shall be placed in 8-inch maximum vertical lifts, measured before compaction, in horizontal layers with a minimum width of 6 feet. This specified width may be any combination of new fill plus cut into existing slope, except that a minimum cut of 2 feet into existing slope per layer of fill must be made. The edge of the horizontal lifts should over-extend finish grades during placement and compaction. Slopes shall be subsequently trimmed to design section after placement of fill has been completed.

The Contractor shall not place channel embankment construction material until the Engineer has taken cross sections after dewatering and clearing and grubbing of the area to be excavated has been performed as specified in Articles 22.04 and 22.02, respectively, are completed.

The required overexcavated areas, from Stations 203+00 to 244+36, shall be backfilled with the native channel embankment as specified in this Article.

23.01.02.04 Testing

Compaction tests will be performed by the Engineer. The Contractor shall operate the equipment so as to assist the Engineer in obtaining adequate tests. Any area that does not meet minimum test requirements shall be removed and re-compacted until tests meet the minimum requirements. All costs for such required removal and re-compaction of materials, including costs for retesting, shall be borne by the Contractor.

23.01.02.05 Submittals

No special requirements.

23.01.02.06 Measurement

Finish grade surface elevations and measurements shall conform to the tolerances specified in Article 14.04, "Construction Survey," of these Specifications.

Channel embankment shall be measured in cubic yard. The quantity of Channel embankment shown on the Proposal Form is approximate only and represents materials to be placed prior to clearing and grubbing.

The grade line prior to embankment construction will be determined by the second set of cross sections provided by the Contractor and accepted by the Engineer as described in Article 23.01.01, "Channel Excavation." After channel embankment work is complete, the Contractor's Surveyor will take a third set of cross sections. Measurement for channel embankment will be determined by the average end area method in cubic yards utilizing the second and third sets of cross sections taken by the Contractor's Surveyor.

23.01.02.07 Payment

Full compensation for furnishing all labor, materials, tools, equipment and incidentals, and for doing all work required including stripping and meeting all other requirements in the Parikh 2010 report for channel embankment construction, as described in this Article, as shown on the Drawings, as specified in these Specifications and as directed by the Engineer, shall be included in the unit price bid per cubic yard for CHANNEL EXCAVATION AND EMBANKMENT, Bid Item No. 9 and Bid Additive Item Nos. 63, 88 and 124, if/when included in the awarded project by the District, and no separate payment will be made therefore.

Full compensation for furnishing all labor, materials, tools, equipment and incidentals, and for doing all work necessary to provide survey for excavation quantity measurement shall be included in the prices bid for various items of work per Section 4.04 “Construction Survey”, and no additional payment will be made therefore.

23.02 Trench Excavation

23.02.01 Scope of Work

Trench excavation shall consist of providing all work required to excavate for the relocation and installation of utilities, installation of new irrigation system, storm drains modifications, and floodwall subsurface drain system as shown on the Drawings, as specified in these Specifications, and as specified by the Engineer.

Trench excavation shall not begin until the Contractor has submitted the “Proposed Trench Excavation Plans”, per Article 5.11 “Excavation Safety Plans”, and the Engineer has returned said plan indicating “In Receipt of.”
The Contractor's attention is directed toward Article 15.05, “Rights of Way,” Article 6.14, “Preservation of Property,” and Article 6.15, “Contractor's Responsibility for Work,” of these Specifications and Section 7-1.06, Safety and Health Provisions, of the State Specifications.

During installation of the utilities or systems requiring trenching, the Contractor shall provide temporary shoring systems as necessary to support the sides of the excavation and trenches. This shoring shall prevent any ground movement, which may damage adjacent property or structure, damage or delay the work, or endanger life and health. The Contractor shall design, install, and maintain temporary shoring systems as required by CAL/OSHA and other applicable government regulations and agencies.

Existing material in the bottom of the trench that is unsuitable for supporting the irrigation piping shall be excavated and replaced with suitable permeable material in accordance with Article 23.07, “Permeable Material,” of these Specifications. The excavation shall be free of standing water and loose or disturbed material before fill or concrete placement. Fill shall be placed immediately after excavation and subgrade observation.

23.02.02 Material / Placement

Trenches shall be excavated in conformance with Article 5.14, “Excavation Safety Plans,” of these Specifications.

The Contractor is solely responsible for excavation safety, including support to all adjacent improvements. The Contractor is also solely responsible for trench dewatering as set forth in Article 22.04, "Control of Water," of these Specifications.

Trenches shall be excavated to a minimum of 6 inches below the final pipe invert. Trenches shall be excavated to allow proper compaction of pipe bedding and backfill material as set forth in Article 23.03, "Trench Backfill," of these Specifications.

All excess and unsuitable excavated material shall be recycled. Material that cannot be recycled shall be removed from the right of way and legally disposed of by the Contractor. Excavated materials that are temporarily stored on site shall be placed at a distance greater than the trench depth away from the top of the slope, or at a minimum distance of five (5) feet from the top of the trench, whichever is greater.

Trenches for utilities within City of San Jose Right-of-Way shall be excavated per the requirements of the 1992 City of San Jose Standard Plans and Specifications.

23.02.03 Testing

No special requirements.

23.02.04 Submittals

Proposed Trench Excavation Plans shall be supplied per Article 5.14, "Excavation Safety Plan," of these Specifications.

The Contractor's attention is directed to Article 23.10, "Shoring", of these Specifications, for all shoring systems and submittal requirements to be used during trench excavation.

23.02.05 Measurement

Trench excavation will not be measured.

23.02.06 Payment

Full compensation for furnishing all labor, materials, tools, equipment and incidentals, and for doing all work required for trench excavation, including shoring, if required, shall be included in the lump sum or unit price bid for the items of work which require Trench Excavation, and no additional payment will be made therefore.

23.03 Trench Backfill

23.03.01 Scope of Work

Trench Backfill shall consist of all backfill required to restore excavated trenches to a finished grade that conforms to the surrounding existing ground or, within roadways, to the finish grade elevations as shown on the Drawings, as specified in these Specifications, and as directed by the Engineer.

23.03.02 Materials

Pipe bedding material shall be Type A bedding material or Class 2 permeable material as specified in the State Specifications. Uniformly graded materials such as pea gravel shall not be used as bedding material.

Trench backfill above the pipe bedding shall be channel embankment material. Channel embankment material and placement shall be in accordance with Article 23.01.02, "Channel Embankment."

Material for utility trenches within City of San Jose Right-of-Way shall be per the requirements of the 1992 City of San Jose Standard Plans and Specifications.

23.03.02.01 Placement

Trench backfill within City of San Jose right-of-way shall be per the requirements of the 1992 City of San Jose Standard Plans and Specifications.

Pipes shall have a minimum pipe bedding of six (6) inches placed beneath the pipe. Pipe bedding material shall be placed in accordance with the 1992 City of San Jose Standard Plans and Specifications and at the same rate on both sides of the pipe and a minimum of four (4) inches above pipe crown.

In all stages of the trench backfilling operation, the Contractor shall limit both method and equipment so as to not damage the integrity of the pipe or related facilities or induce a diametrical variation of greater than plus or minus 0.5 percent.

Jetting or ponding to achieve compaction will not be permitted.

23.03.02.02 Testing

Testing shall be in accordance with Article 23.01.02, "Channel Embankment," and Article 23.05, "Structural Backfill," of these Specifications.

23.03.02.03 Submittals

Submittals shall be in accordance with Article 23.05, "Structural Backfill," of these Specifications.

23.03.02.04 Measurement

Trench backfill will not be measured.

23.03.02.05 Payment

Full compensation for furnishing all labor, materials, tools, equipment, and incidentals and for doing all work for trench backfill, including bedding, as shown on the Drawings, as specified in these Specifications, and as directed by the Engineer shall be included in the lump sum or unit price bid for items of work which require Trench Backfill, and no additional payment will be made therefore.

23.04 Structural Excavation

23.04.01 Scope of Work

Structural Excavation shall consist of all work and materials necessary to excavate for the construction of all concrete structures including floodwalls (include foundation), reinforced concrete box (RCB) culverts, U-Channels, wingwalls, apron, etc. as shown on the Drawings, as specified in these Specifications, and as directed by the Engineer.

Structural Excavation shall not begin until the Contractor has submitted "Proposed Structural Excavation Plans" to the Engineer for review and acceptance.

Structural Excavation shall conform to the applicable provisions of Section 19-3, Structural Excavation and Backfill, of the State Specifications, except as modified by these Specifications. The provisions of Section 19-1.04, Removal and Disposal of Buried Man-made Objects, of the State Specifications shall not apply.

The Contractor shall provide shoring required for structural excavation in accordance with Article 23.10, "Shoring," of these Specifications.

23.04.02 Materials

Structural excavation in excess of that needed for channel embankment and structural backfill shall be removed from the project site and recycled. If recycling

of material is not available, the material shall be disposed of in an area provided by the Contractor.

Replacement of material that is not suitable for structural backfill shall conform to the requirements of Article 23.06, “Unsuitable Material,” of these Specifications.

Unnecessary excavation by Contactor below the specified elevation of the channel or structural excavation limit and not required for unsuitable material removal shall become the property of the Contractor.

23.04.03 Placement

Removal, disposal, and replacement of unsuitable material and buried man-made objects shall conform to the requirements of Article 23.06, “Unsuitable Material,” of these Specifications.

The work shall also include all pumping, ditching and other required measures for removal or exclusion of groundwater.

The Contractor is solely responsible for structural excavation safety and providing shoring systems as required in accordance to Article 23.10, “Shoring,” of these Specifications.

Care shall be exercised to prevent structural over-excavation. Structural over-excavated areas, except as directed by the Engineer, shall be backfilled with suitable material in conformance with Article 23.05, “Structural Backfill,” of these Specifications, at the Contractor's expense.

During excavation for the RCB culvert structure foundation and until the RCB culvert has been placed and backfill completed, the water level within the excavated section shall be maintained below the subgrade such that the subgrade is in a dry condition at all times as set forth in Article 22.04 “Control of Water” of these Specifications.

No debris, exposed tree roots, or other objectionable materials shall be permitted in the final cut section.

Care shall be exercised to protect existing facilities during structure excavation. The Contractor’s attention is directed to Article 15.03 “Protection of Existing Improvements” of these Specifications.

23.04.04 Testing

No special requirements for testing.

23.04.05 Submittals

Proposed Structural Excavation Plans shall be supplied per Article 5.14, "Excavation Safety Plan," of these Specifications.

The Contractor's attention is directed to Article 23.10, "Shoring," of these specifications, for all shoring systems to be used during structural excavation

The Contractor shall submit a recycling plan outlining all materials to be recycled. The plan shall indicate the material to be recycled and the location of the recycling center where the material will be delivered. The plan shall also indicate the materials to be removed that will not be recycled. The plan shall be submitted to the Engineer for review and approval.

23.04.06 Measurement

The quantity for Structural Excavation shall not be measured. Limits of Structural Excavation shall be as shown in the Drawings and as described in Section 19-3.07, "Measurement", of the State Specifications, except as modified by these Special Provisions.

23.04.07 Payment

Full compensation for furnishing all labor, materials, tools, equipment, and incidentals and for doing all work required for structural excavation, as shown on the Drawings, as specified by these Specifications, and as directed by the Engineer including shoring shall be included in the lump sum or unit price bid for the items of work that require Structural Excavation, and no additional payment will be made therefore.

23.05 Structural Backfill

23.05.01 Scope of Work

Structural Backfill shall consist of all work and materials necessary to furnish, place, spread, water, compact, and grade earth material around the structural facilities required under this Contract including aggregate base beneath the structural facilities as shown on the Drawings.

23.05.02 Materials

Structural Backfill shall conform to the provisions of Section 19-3.06, "Structural Backfill", of the State Specifications, except as modified in these Specifications.

The use of native soils excavated from channel excavations within the project limits for Structural Backfill shall conform to applicable provisions of Section 19-7.02, "Imported Borrow", of the State Specifications. The material shall have the following characteristics:

A. At least 40% (by weight) of the soil materials passing US Standard Sieve No. 200

B. Plasticity Index (PI) in the range of 10 to 20

C. Liquid Limit not to exceed 40

D. The soil should not contain rocks or lumps over 3 inches in the greatest dimension

E. No more that 10% of the soil particles should be greater than 1.5 inches in the greatest dimension

F. Soil shall be free of organic matter, trash, concrete rubble and other deleterious material.

Aggregate base to be placed under footings shall be Class 2, 3/4-inch maximum size, conforming to Section 26-1.02A, Class 2 Aggregate Base, of the State Specifications.

23.05.03 Placement

Placement of Structural Backfill shall conform to the provisions of Section 19-3.06, "Structural Backfill", of the State Specifications, except as modified in these Specifications.

Structural Backfill and aggregate bases under foundations shall have at least 95 % relative compaction.

Ponding or jetting to achieve compaction will not be permitted.

Finish grade for structural backfill shall be as shown on the Drawings or as required to conform to adjacent ground elevations.

23.05.04 Testing

Compaction shall conform to Section 19-5, "Compaction", and Section 19-6, "Embankment Construction", of the State Specifications. Compaction test shall be

conducted in accordance with the latest edition of ASTM Standard Test Methods D1557. Individual test results shall be used to determine whether compaction of an area meets minimum requirements in lieu of an averaging method.

Compaction tests will be performed by the Engineer. The Contractor shall operate construction equipment so as to not hinder the Engineer from obtaining adequate tests. Any area that does not meet minimum test requirements shall be removed and re-compacted until tests meet the minimum requirements. All costs for such required removal and re-compaction of materials, including costs for retesting, shall be borne by the Contractor. The compaction moisture content of the fill shall be within a range of -2% to +3% of optimum moisture content.

23.05.05 Submittals

For imported Structural Backfill, the Contractor shall submit an "Imported Material Certification Form" for each borrow source of structural backfill material per Article 41.03, "Imported Subgrade Fill," of these Specifications for approval prior the hourly import.

23.05.06 Measurement

The quantity for structural backfill shall not be measured. Limits of structural backfill shall be as described in Section 19-3.07, "Measurement", of the State Specifications, except as modified by these Special Provisions.

23.05.07 Payment

Full compensation for furnishing all labor, materials, tools, equipment, dewatering and incidentals, and for doing all work required for structural backfill, including furnishing and placing permeable material, aggregate base and backfill material as shown on the Drawings, as specified in these Specifications, and as directed by the Engineer, and any necessary watering of backfill material to obtain the required compaction shall be included in the lump sum or unit price bid for the item of work which requires Structural Backfill and no additional payment will be made therefore.

23.06 Unsuitable Materials

Unsuitable Materials, as used in these Specifications shall refer to sand/silt pockets, lenses and layers that may be encountered in the native soil during excavation for the various items of work. Such lose sands and non plastic silts may cause localized slope failure. When deemed unsuitable material by the Engineer, such soils shall be removed as directed by the Engineer.

23.06.01 Scope of Work

The Contractor is alerted to the possibility of the existence of unsuitable materials, including which may not be shown on the Drawings. The following provisions shall apply, regardless of whether the unsuitable materials are shown or not shown on the Drawings.

If, in the opinion of the Engineer, unsuitable materials are encountered within the limits for structural or channel excavation, they shall be removed and disposed of outside of the right of way. Where over-excavation has occurred to remove unsuitable materials, the over-excavated area shall be backfilled with Channel Embankment or Structural Backfill.

Unnecessary excavation by Contactor below the specified elevation of the channel or structural excavation limit and not required for unsuitable material removal shall become the property of the Contractor.

The Contractor shall provide the Engineer evidence that a disposal site for Unsuitable Material has been obtained and is a legal site.

23.06.02 Materials

Unsuitable Materials shall be replaced by embankment material or structural backfill that is compacted and tested in accordance with the requirements for backfill as specified in Article 23.01.02 “Channel Embankment” of these Specifications.

23.06.03 Placement

Contractor shall remove unsuitable materials as directed by the Engineer.

Unsuitable materials removed shall be removed from the right of way within 24 hours.

Excess moisture content in the foundation material or channel bottom is not by itself sufficient cause of determining that the material is unsuitable. Preparation of the foundation to receive material and stabilization of the channel bottom to allow efficient and safe operation of equipment and use of labor shall be the responsibility of the Contractor. The Contractor may elect to excavate and replace suitable base material to facilitate compaction and/or stabilization at no additional costs. If the Contractor elects to remove and replace suitable foundation material, it shall be at its own expense and at no additional cost to the District.

23.06.04 Testing

Testing required for determining suitability of materials shall be provided by the District.

23.06.05 Submittals

No special requirements.

23.06.06 Measurement

Excavation of unsuitable materials that were removed per the Engineer's direction shall be measured in the field by the Contractor's Surveyor per Article 14.04 "Construction Survey" of these Sepcifications.

23.06.07 Payment

Payment for the removal of unsuitable materials, if encountered, and removed per the Engineer's direction only, and replacement of said unsuitable material per this Article, including excavation, off haul, testing, disposal, disposal fees, and any necessary watering of backfill material to obtain the required compaction shall be paid for based on measured quantities, by Change Order per Article 5.04 "Change in Contract Price", at the unit price bid per cubic yard for CHANNEL EXCAVATION AND EMBANKMENT, Bid Item No. 9 and Bid Additive Item Nos. 63, 88, and 124 if/when included in the awarded project by the District.

If the Contractor elects to remove and replace unsuitable material without Engineer's prior authorization or perform unnecessary over excavation, it shall be at the Contractor's own expense and at no cost to the District.

23.07 Permeable Material

23.07.01 Scope of Work

Permeable material shall consist of all work and materials necessary to furnish, place, and compact permeable materials including drain rock, as shown on the Drawings, as specified in these Specifications and as directed by the Engineer.

23.07.02 Materials

Permeable material shall conform to Class 1, Type B and Class 2 permeable material as specified in Section 68-1.025, "Permeable Material", of the State Specifications.

23.07.03 Placement

Excavation for the placement of permeable material shall conform to Article 23.01.01, "Channel Excavation," and Article 23.04, "Structural Excavation," of these Specifications.

Permeable material shall not be placed until the subgrade has been inspected and approved by the Engineer. Permeable material shall not be placed over or around pipe until the installation of the pipe has been inspected and approved. Permeable material shall be placed over or around pipe with care to avoid any displacement in line or grade of the utility or pipe.

Permeable material shall be placed uniformly in layers 6 inches deep. The permeable material shall be placed in a manner to avoid segregation of particle sizes and to insure the continuity and integrity of all zones. No foreign materials shall be allowed to become intermixed with or otherwise contaminate the permeable materials.

The Contractor shall not allow permeable material to spill over into non-designated areas, including planting areas.

23.07.04 Testing

Permeable material gradation shall be sampled at the site and tested by the Engineer.

Any difference of opinion between the Engineer and the Contractor shall be resolved by checking the gradation of the truckload of permeable material.

Mechanical equipment, a sorting site, and labor needed in checking gradation shall be provided by the Contractor, at Contractor's expense.

23.07.05 Submittals

The Contractor shall provide a certified test report on the sieve analysis certifying the gradation requirements for the permeable material are met.

The Contractor shall provide five (5) samples of permeable material. One (1) sample shall be provided at the quarry and the other samples shall be placed at the construction site. These samples shall be used as frequent reference for judging the gradation of the permeable material supplied.

23.07.06 Measurement

The quantity of permeable material will not be measured.

23.07.07 Payment

Full compensation for furnishing all labor, materials, tools, equipment and incidentals and for doing all work required for placing permeable material and for providing mechanical equipment and a sorting site for testing as shown on the Drawings, as specified in these Specifications, and as directed by the Engineer shall be included in the lump sum or unit price bid for the item of work which requires permeable material, and no additional payment will be made therefore.

23.08 Geotextile Fabric

23.08.01 Scope of Work

Geotextile fabrics shall consist of all work and materials necessary to furnish and place geotextile fabrics for structure drainage and slope toe protection as shown on the Drawings, as specified in these Specifications, and as directed by the Engineer.

23.08.02 Materials

The geotextile fabric for structure drainage and slope toe protection and other applications between the soil and permeable rock material shall be a nonwoven fabric conforming to Section 88-1.03, “Filter Fabric”, and Section 88-1.04 (Type B), “Rock Slope Protection Fabric”, of the State Specifications, Mirafi 700X or equal. The apparent opening size of the nonwoven fabric shall be less than No. 40 Standard Sieve Size (0.425 mm).

23.08.03 Placement

The geotextile fabrics shall be ultraviolet ray (UV) protected, covered within ten (10) days from time of placement, and shall not be stored in an area directly exposed to sunlight prior to installation.

The geotextile fabrics shall be handled and placed in accordance with the manufacturers’ recommendations, these Specifications, and as directed by the Engineer. These Specifications shall take precedence over the manufacturer’s recommendations.

The surfaces on which the geotextile fabrics are to be installed shall be free of loose or extraneous material and sharp objects, graded smoothly, and compacted prior to placement of the fabric. Appropriate adjustments to the grade shall be made as required.

The fabrics shall conform to the surface irregularities of underlying graded soil. Geotextile fabric sections shall be joined by overlapping a minimum of 2 feet at the edges. Where applicable, the fabric shall be overlapped such that the upstream fabric is laid over the downstream fabric for transverse joints, and upslope fabric over the downslope fabric for longitudinal joints.

Any damage of the geotextile fabrics during placement as a result of the Contractor's negligence shall be repaired or replaced, as directed by the Engineer, by the Contractor at the Contractor's own expense.

23.08.04 Testing

No special requirements.

23.08.05 Submittals

Manufacturers catalog information for selected products and a detailed description of the installation procedure of the geotextile fabric shall be submitted for the Engineer's approval.

23.08.06 Measurement

The quantities of geotextile fabric will not be measured.

23.08.07 Payment

Full compensation for furnishing all labor, materials, tools, equipment and incidentals and for doing all work required to install geotextile fabrics, as shown on the Drawings, as specified in these Specifications, and as directed by the Engineer shall be included in the lump sum or unit price bid for the items of work which require the use of Geotextile Fabrics, and no additional payment will be made therefore.

23.09 Structural Drainage

23.09.01 Scope of Work

Structure Drainage shall consist of all work and materials necessary to furnish and place weep holes as shown on the Drawings, as specified in these Specifications and as directed by the Engineer.

23.09.02 Materials

Polyvinyl chloride (PVC) pipe and fittings for weep holes shall be nominal 4-inch diameter Schedule 40 conforming to ASTM Designation D-1785. All fittings shall have solvent welded joints. The welding solvent shall conform to that recommended by the manufacturer of pipe. Perforations shall be staggered 16 mm holes.

Acrylonitrile-Butadience-Styrene (ABS) fittings shall be allowed only where shown on the Drawings. The fittings shall conform to ASTM Designation 2751. The solvent-cement to join PVC and ABS shall conform to the manufacturer's recommendations.

Permeable material shall conform to the provisions of Article 23.07, "Permeable Material," of these Specifications.

Geotextile fabric shall conform to the provisions of Article 23.08, "Geotextile Fabric," of these Specifications.

23.09.03 Placement

Structure drainage shall be placed as shown on the Drawings.

23.09.04 Testing

No special requirements.

23.09.05 Submittals

No special requirements.

23.09.06 Measurement

The quantities for Structural Drainage will not be measured.

23.09.07 Payment

Full compensation for furnishing all labor, materials, tools, equipment and incidentals, and for doing all work required for Structural Drainage, as shown on the Drawings, as specified in these Specifications and as directed by the Engineer shall be included in the lump sum or unit price bid for the items of work which require Structural Drainage, and no additional payment will be made therefore.

23.10 Shoring

23.10.01 Scope of Work

Shoring shall be provided as necessary, as an aid in project construction. The shoring system shall prevent any ground movement which may damage adjacent facilities, including, but not limited to; pavement, utilities, properties or structures; damage or delay of work; or endanger life and health. Shoring systems shall consist of all work and materials necessary to provide temporary shoring, including but not limited to sheet piling, bracing and temporary slopes.

The Contractor's attention is directed toward Article 5.14 “Excavation Safety Plans” Article 6.14, “Preservation of Property,” Article 6.15, “Contractor's Responsibility for Work,” 15.04, Pre-Construction Surveys and Article 15.05, “Rights of Way,” of these Specifications, and Section 7-1.06, Safety and Health Provisions, of the State Specifications.

23.10.02 Materials

Shoring shall be designed for all live and dead loads, including surcharge and traffic loads that may be imposed.

The Contractor shall design, install and maintain the temporary shoring, sheet piling, bracing, and sloping as required by CAL/OSHA and other applicable governmental regulations and agencies. The Contractor shall employ shoring design that is based on the stresses for various materials of construction contained in California Building Code (CBC), 2007 edition.

Lumber- When lumber is used in shoring elements, the Contractor shall furnish structural grade planks, beams, and posts as defined and specified for stress-grade lumber in the American Lumber Standards for particular application. Lumber may be rough, untreated, in random lengths, and shall be of standard dimensions.
Structural Steel- When structural steel is used for sheet piling or other shoring elements, the Contractor shall provide sheet pile manufactured from steel conforming to ASTM A-328, or from steel conforming to ASTM A-572, Grade 42.

23.10.03 Placement

The Contractor shall install sheeting and bracing for trench and structure excavation progressively as the removal of excavated material requires per CAL/OSHA and other applicable government regulations and shall install wales and struts at close intervals to prevent displacement of the surrounding earth thus maintaining safe conditions in the work area. Any damage proven to result from improper installations shall be the responsibility of the Contractor.

Sheeting pile vibration and driven piles shall not be permitted.

Shoring for formwork and cast-in-place concrete shall not be removed until twenty-one (21) days after concrete placement.

The Contractor shall remove the temporary shoring when no longer needed. The Contractor may reuse temporary shoring but shall leave in place any permanent shoring system.

23.10.04 Testing

There is no special requirement.

23.10.05 Submittals

The Contractor shall submit a monitoring plan to the Engineer prior to constructing shoring system(s) to record the movements of any existing structures being shored.

Prior to installation of any shoring system, the Contractor shall submit two (2) sets of complete calculations, one (1) set of sepias, and five (5) sets of design drawings, showing a plan layout and shoring detail of all shoring systems for the Engineer's review. The calculations and Drawings shall be signed and stamped by a civil or structural engineer registered in the State of California. Construction shall not proceed without the Engineer's review of the Contractor's calculations and Drawings. Submittals shall be in accordance with Articles 5.14, “Excavation Safety Plans,” and 9.02, “Submittals to be Furnished by the Contractor,” of these Specifications.

Review by the Engineer of the calculations and Drawings or inspection performed by the Engineer will not relieve the Contractor for full responsibility for the shoring systems.

Prior to applying any loading on the shoring, the Contractor's engineer shall inspect the installation and certify in writing that the shoring system conforms to the Drawings and that the material and workmanship is satisfactory. The

certification shall be provided to the District and be available on the project site in accordance with Article 17.17, "Construction Safety Orders," Title 8, of the California Administrative Code.

23.10.06 Measurement

Shoring will not be measured.

23.10.07 Payment

Full compensation for furnishing all labor, materials, tools, equipment, and incidentals, and for doing all work required for shoring as shown on the Drawings, as specified in these Specifications, and as directed by the Engineer, shall be included in the lump sum or unit price bid for the item of work which required shoring, and no additional payment will be made therefore.

SECTION 24. NOT USED

24 NOT USED

25 SURFACINGS AND PAVEMENTS

25.01 Asphalt Concrete

25.01.01 Scope of Work

Asphalt Concrete shall consist of all work and materials necessary to furnish and place Asphalt Concrete at grade for street surfacing and restoration as shown on the drawings and as specified in the Specification and as directed by the Engineer.

25.01.02 Material

Asphalt concrete shall be Type A conforming to the provisions in Section 25.01, "Asphalt Concrete", of the Standard Specifications and these special provisions. Surface course shall be ½ inch maximum, coarse Type A asphaltic concrete. The base course(s) shall be of ¾" maximum, coarse Type A asphaltic concrete.

Bituminous binder shall be PG 64-10 asphalt conforming to Section 92 of the Standard Specifications. Certification of the above shall be furnished to the Engineer.

The Contractor shall submit the AC mix design sufficiently in advance of manufacturing to allow for Engineer's review and approval. Engineer may direct the amount of asphalt binder to be mixed with the aggregate.

Aggregate for surface course AC shall conform to the grading specified in Section 39-2.02, "Aggregate", of the State Specifications for one-half inch maximum, medium grading for the top layer of the surface course; one-half inch maximum, medium grading for asphalt concrete used to level irregularities in advance of placing the surface course; and all other asphalt concrete shall have aggregate conforming to the size noted for ¾" maximum, medium gradation. Aggregate shall have a sodium sulfate loss of less than 9.6% when tested in accordance with Test Method No. CCC 214 (AC).

When the combined grading of the coarse and fine aggregates is deficient in material passing the No. 200 sieve, commercial filler may be added in conformance with Subsection 39-3.03 of the State Specifications.

Paint binder (tack coat) shall be of penetration type asphalt emulsion grade SS-1H furnished and applied in conformance with the provisions in Section 94, "Asphaltic Emulsions", of the State Specifications, and these Specifications, and shall be applied to all vertical surfaces of concrete gutter and to existing surfacing that will come into contact with asphalt concrete.

Liquid Asphalt Prime Coat shall be liquid asphalt SS-1H furnished and applied to all surfaces of the aggregate base course in conformance with Section 93, "Liquid Asphalts", of the State Specifications and these special provisions. Spread at the rate of 0.25 gallons per square yard of surface. Prior to placement of asphaltic concrete, the prime coat shall have attained a minimum penetration of ¼ inch.

Bituminous seals shall conform to the State Specifications and shall be of the type designated on the Drawings.

25.01.03 Placement

Asphaltic pavement shall be spread and compacted in layers not to exceed 0.17 foot on any surface course and shall never exceed 0.25 foot on any single course. Asphaltic pavement shall be placed to the minimum thickness as shown on the Drawings. All mixtures, except open graded mixture, shall be spread at a temperature of not less than 225ºF and all initial rolling and tamping shall be performed when the temperature of not less than 225ºF and all initial rolling and tamping shall be performed when the temperature of the mixture is such that the sum of the air temperature plus the temperature of the mixture is between 280ºF and 375ºF. Open graded mixture shall be spread at a temperature suitable for workability.

All mixtures shall be placed only when the atmospheric temperature is above 50ºF. However, in no case will paving operations be allowed between November 1 and April 1, unless express permission is granted by the Engineer.

Prior to placing the surface course, the finished surface of the previous layer shall not vary at any point more than 0.05-foot above or below the grade established by the Engineer. All trimming of the surface shall be completed while the temperature of the mix is above 200ºF.

Immediately in advance of placing asphaltic concrete, additional prime coat shall be applied as directed by the Engineer to areas where the prime coat has been destroyed and no additional compensation shall be allowed for this work.

A sand blotter shall be applied in specific locations to the prime coat as directed by the Engineer in order to maintain vehicular and/or pedestrian traffic.

The Contractor shall not perform paving operations when the weather is rainy or foggy. It shall be the Contractor's responsibility, based on weather predictions, to schedule his paving operations to avoid paving in the rain or fog. If the day's operations are cancelled because of predicted rain or fog, a non-working day will be allowed regardless of actual working conditions.

Asphalt concrete shall not be placed on any surface which contains ponded water or excessive moisture.

If paving operations are in progress and rain or fog forces a shut down, loaded trucks in transit shall return to the plant and no compensation will be allowed therefore.

Attention is directed to the provisions in the first paragraph of Section 39-5, "Spreading", of the State Specifications. The extent of the areas where a surface course mixture shall be spread to level irregularities, as shown on the Drawings, shall be subject to revision by the Engineer, depending on actual conditions prevailing on the project.

No traffic shall be allowed on the asphalt emulsion with the exception of vehicles unloading asphalt concrete. All vehicles involved with the Contractor's operations shall turn around within the road right of way. Driveways and other private property shall not be used without prior written consent of the involved property owner, a dated copy of which shall be delivered to the Engineer prior to the use thereof.

The area to which paint binder has been applied shall be closed to public traffic. Care shall be taken to avoid tracking binder material onto existing pavement surfaces beyond the limits of construction.

A drop off of more than 0.25-foot will not be allowed at any time adjacent to traveled lanes of asphalt concrete surfacing.

25.01.04 Testing

Aggregate gradation tests shall be performed at the plant and submitted for review by the Engineer prior to delivery of asphalt concrete to the project site. The Contractor shall perform and report the Bulk Specific Gravity (California Test 308, Method A) and Stabilometer Value ("S" Value) according to the requirements of the State of California Department of Transportation June 2009 Quality Control Manual for Hot Mix Asphalt. The Contractor shall operate the equipment so as to obtain adequate tests.

25.01.05 Submittals

AC mix design, gradation of aggregates and all certificates of compliance.

Bituminous binder certification.

25.01.06 Measurement

Any asphalt plant delivering asphaltic materials for paving streets, drives, avenues, alleys, and other public ways within the project limits shall furnish to the Engineer one copy of the official weight tag with each load of materials delivered on request. All costs incurred to furnish such weight tags to the Engineer shall be included in the cost of asphaltic pavement.

25.01.07 Payment

Full compensation for furnishing all labor, material, tools, equipment and incidentals and for doing all work required for Asphalt Concrete as shown on the Drawings, as specified in these Specifications, and as directed by the Engineer shall be included in the lump sum or unit price bid for the items which require Asphalt Concrete and no additional payment will be made therefore.

25.02 Roadway Restoration – Bid Item Nos. 10, 89, 125

25.02.01 Scope of Work

Roadway restoration shall consist of furnishing all labor, tools, equipment, and incidentals to provide final road surfacing including preparation of road beds and reconstructing roadway structure sections, sawcutting of existing pavement, constructing longitudinal and transverse conforms, slurry seal at Capitol Expressway, signal interconnect cable and conduit replacement at Capitol Expressway, removal and reinstatement of pavement stripes, removal and reinstatement of pavement markings, placing asphalt concrete primer coat, paint binder, asphalt concrete, and fog seal, as shown on the Drawings, as specified in these Specifications, and as directed by the Engineer.

Roadway restoration includes road surfacing over the box culverts at Jackson Avenue, Capitol Expressway and Story Road, along with the slurry seal and Capitol Expressway as shown on the Drawings.

Roadway restoration over the Penrod Place PVC Storm Structure shall conform to this Article.

This work shall include furnishing and mixing mineral aggregate and asphalt binder at a central mixing plant, spreading and compacting the mixture, and furnishing and applying Prime Coat and Tack Coat to the lines, grades, and dimensions shown on the Drawings, and as specified in these Specifications.

25.02.02 Materials

Aggregate Base shall be Class 2 conforming to Section 26 of the State Specifications.

Asphalt Concrete Paving shall conform to Article 25.01, "Asphalt Concrete" of these Specifications. Paving over areas where puddling of excess of unpenetrated prime coat exists shall not be allowed.

Longitudinal and transverse conforms between existing pavement and newly constructed pavement shall be made by cutting the existing pavement to a neat, smooth line at the conform line and constructing a vertical-face butt joint.

A Type II slurry seal shall be applied to the disturbed areas of Capitol Expressway upon completion of the construction phases, per Section 37-2, "Slurry Seal" of the State Specifications.

Painted traffic stripes and pavement markings shall conform to the provisions in Section 84, "Traffic Stripes and Pavement Markings" of the State Specifications.

Pavement markers shall conform to the provisions in Section 85, "Pavement Markers" of the State Specifications.

Signal interconnect cable and conduit (Capitol Expressway) materials shall be per Santa Clara County Roads and Airport Specification as shown on the Drawings.

25.02.03 Placement

Subgrade shall be prepared as "Class C" per Section 21 of the City of San Jose Standard Specifications.

Painted traffic stripes, pavement markings, pavement markers and signs shall be restored to match the preconstruction condition, upon the completion of the construction at each roadway crossing.

Traffic stripes, pavement markings, and pavement markers shall be placed to the lines as established by the Contractor under the direction of the Engineer. All work necessary to establish satisfactory lines and locations for traffic stripes, pavement markings, and pavement markers shall be performed by the Contractor.

Blue pavement markers shall be installed on the roadway opposite fire hydrants.

Capitol Expressway slurry seal shall be placed per the requirements of Section 37-2, "Slurry Seal" of the State Specifications.

Signal interconnect cable and conduit (Capitol Expressway) placement shall be per Santa Clara County Roads and Airports Specifications as shown on the Drawings.

25.02.04 Testing

At the direction of the Engineer, core samples of the in-place asphalt paving may be taken by a recognized commercial laboratory for checking conformance of paving thickness and for extraction of bitumens to establish conformance of combined aggregate grading and percent asphalt binder with these Specification and/or Special Provisions. Costs of such tests shall be included in the cost of asphaltic pavement, and no additional compensation shall be allowed.

25.02.05 Measurement

Road Restoration will not be measured.

25.02.06 Payment

Full compensation for furnishing all labor, materials, tools, equipment and incidentals, for doing all work required for Roadway Surfacing and/or Restoration of Pavement, including preparation of road beds and reconstructing roadway structure sections, sawcutting of existing pavement, constructing longitudinal and transverse conforms, slurry seal at Capitol Expressway, signal interconnect cable and conduit replacement at Capitol Expressway, removal and reinstatement of pavement stripes, removal and reinstatement of pavement markings and signs, placing asphalt concrete primer coat, paint binder, asphalt concrete, and fog seal, as shown on the Drawings, as specified by these Specifications, and as directed by the Engineer, shall be included in the lump sum price bid for ROADWAY RESTORATION, Bid Item No. 10 (Jackson Avenue and Capitol Expressway) and Bid Additive Item Nos. 89 (Story Road and Murtha Drive) and 125 (Murtha Drive and Moss Point Drive), if/when included in the awarded project by the District.

Full compensation for furnishing all labor, materials, tools, equipment and incidentals, for doing all work required for Roadway Surfacing and/or Restoration of Pavement, including preparation of road beds and reconstructing roadway structure sections, sawcutting of existing pavement, constructing longitudinal and transverse conforms, removal and reinstatement of pavement stripes, removal and reinstatement of pavement markings and signs, placing asphalt concrete primer coat, paint binder, asphalt concrete, and fog seal, as shown on the Drawings, as specified by these Specifications, and as directed by the Engineer, shall be included in the lump sum price bid for PENROD PLACE PVC STORM STRUCTURE, Bid Item No. 27, and no separate payment will be made therefore.

25.03 Curb, Gutter, Sidewalk and Driveway Restoration – Bid Item Nos. 11, 12, 13, 90, 91, 92, 126, 127, 128

25.03.01 Scope of Work

Curb, curb and gutter, sidewalk and driveway restoration shall consist of all work and materials necessary to install facilities at grade as shown on the Drawing and as specified in these Specifications.

25.03.02 Materials

Reinforcing steel shall be per Section 52, "Reinforcement" of the State Specifications.

Portland Cement Concrete, within City of San Jose right-of-way, shall be Class "A" per Section 90 of the City of San Jose Standard Specifications.

Portland Cement Concrete, within Santa Clara County right-of-way, shall be constructed of Class 3 concrete in accordance with Sections 73 "Concrete Curb & Sidewalks" and 90 "Portland Cement Concrete" of the State Specifications.

Base in City of San Jose and Santa Clara County rights-of-way, shall be Class 2 Aggregate Base per Section 26, "Aggregate Bases" of the State Specifications and shall be placed under all curbs and gutters, sidewalks and driveways per the Drawings and these Specifications.

25.03.03 Placement

Subgrade within the City of San Jose right-of-way shall be prepared as "Class C" per Section 21 of the City of San Jose Standard Specifications.

Subgrade within the Santa Clara County right-of-way shall be prepared as "Class C" per Section 73 Concrete Curbs and Sidewalk of the State Specifications.

Curb, gutter, sidewalk and driveways within the City of San Jose right-of-way shall be constructed in locations shown on the Drawings in conformance with City of San Jose Standards, Section 73, "Concrete Curbs and Sidewalk", of the State Specifications, and these Specifications at locations shown on the Drawings.

Curb, gutter, sidewalk and driveways within the Santa Clara County right-of-way shall be constructed in locations shown on the Drawings in conformance with Santa Clara County Roads and Airports Standard Details and Specifications, Section 73, "Concrete Curbs and Sidewalk", of the State Specifications, and these Specifications at locations shown on the Drawings.

Sidewalks within driveway areas shall be considered as driveways and shall be thickened or reinforced per City of San Jose Standards or Santa Clara County Roads and Airports Standards where applicable, and shall be placed on 6" aggregate base, Class 2. Full compensation for providing and placing aggregate base and for furnishing and installing steel reinforcing dowels or mesh shall be considered as included in the contract price paid per square foot of concrete driveway and sidewalks and no additional compensation will be allowed therefore.

Concrete handicap access ramps shall be considered as sidewalk and shall conform to City of San Jose Standards or Santa Clara County Roads and Airports Standards where applicable.

25.03.04 Testing

Compaction and sampling shall be per Section 90 "Portland Cement Concrete", of City of San Jose Standard Specifications.

25.03.05 Submittals

Per Section 90, "Portland Cement Concrete", of City of San Jose Standard Specifications, Contractor shall determine the mix proportions and consistency (slump) and shall furnish concrete which conforms to the strength designated by class or as shown on the Drawings, as specified in these Specifications, and as directed by the Engineer. All mix designs shall be submitted for the Engineer's approval.

25.03.06 Measurement

Measurement for Curb and Gutter shall be on a linear foot basis, calculated from the neat line dimensions shown on the Drawings.

Measurement for Sidewalks and Driveway shall be on a square foot basis, calculated from the neat line dimensions shown on the Drawings.

25.03.07 Payment

Full compensation for furnishing all labor, materials, tools, equipment and incidentals for doing all work required for installation of curb and, curb and gutter, complete, in place as shown on the Drawings, as specified in these Specifications, and as directed by the Engineer, shall be included in the unit price bid per linear foot for CONCRETE CURB, GUTTER, Bid Item No. 11 and Bid Additive Item Nos. 90 and 126, if/when included in the awarded project by the District.

Full compensation for furnishing all labor, materials, tools, equipment and incidentals for doing all work required for sidewalks and handicap access ramps, complete, in place as shown on the Drawings, as specified in these Specifications, and as directed by the Engineer, shall be included in the unit price bid per square foot for CONCRETE SIDEWALK, Bid Item No. 12 and Bid Additive Item Nos. 91 and 127, if/when included in the awarded project by the District.

Full compensation for furnishing all labor, materials, tools, equipment and incidentals for doing all work required for Driveways, including sidewalks within the driveway areas, as shown on the Drawings, as specified in these Specifications, and as directed by the Engineer, shall be included in the unit price bid per square foot for CONCRETE DRIVEWAYS, Bid Item No. 13 and Bid Additive Item Nos. 92 and 128, if/when included in the awarded project by the District.

25.04 Aggregate Maintenance Road – Bid Item Nos. 14, 64, 93, 129

25.04.01 Scope of Work

Aggregate Maintenance Road shall consist of excavating for and placing armoring aggregate on grade for the maintenance road, in earthen sections of the maintenance road where shown on the Drawings as specified in these Specifications and as directed by the Engineer.

Concrete Maintenance Roads are not included in this Item.

25.04.02 Materials

Rock for armoring aggregate shall be 1.5” railroad ballast per the American Railroad Engineering and Maintenance Association (AREMA) #4 Main Line and shall consist of clean, hard, and durable gravel or crushed rock. The use of rounded gravel or non angular stone shall not be permitted.

The rock for armoring aggregate shall have a minimum specific gravity of 2.60 in accordance with California Test Method No. 206 and a minimum durability index of 35 in accordance with California Test Method No. 229.

25.04.03 Placement

The material shall be approved by the Engineer before it is placed as armoring aggregate. Placement of the armoring aggregate and required compaction shall be in accordance with Section 26, "Aggregate Bases" of the State Specifications.
Excavation for placement of armoring aggregate shall conform to Section 19-2, "Roadway Excavation" of the State Specifications.

Contractor shall not place armoring aggregate within 12 inches of any tree with a trunk diameter greater than 4 inches.

The surface of the maintenance roads and ramps shall conform to the tolerances specified in Section 19-2, "Roadway Excavation" of the State Specifications.

25.04.04 Testing

Testing is not required.

25.04.05 Submittals

Contractor shall submit for each source providing armoring aggregate, in advance of its use on the project, the source gradation and quality parameters showing they meet the requirement specified in these Specifications.

25.04.06 Measurement

Measurement of armoring aggregate shall be per square foot computed from the neat line dimensions shown on the Drawings.

25.04.07 Payment

Full compensation for furnishing all labor, materials, tools, equipment and incidentals, and doing all work required for constructing the aggregate maintenance road complete in place as shown on the Drawings, as specified in these Specifications and as directed by the Engineer, shall be included in the unit price bid per square foot for AGGREGATE MAINTENANCE ROAD, Bid Item No.14. and Bid Additive Item Nos. 64, 93 ,129, if/when included in the awarded project by the District.

25.05 Concrete Maintenance Road – Bid Item Nos. 15, 65, 130

25.05.01 Scope of Work

Concrete Maintenance Road shall consist of furnishing all labor, tools, equipment and incidentals to provide final concrete maintenance road, including preparing subgrade, placing aggregate base and concrete at maintenance road locations designated as concrete surfacing on the Drawing, as specified in these Specifications, and as directed by the Engineer.

Concrete Maintenance Road shall conform with Section 30.09 "Ramp, Apron Slabs and Concrete Maintenance Road", of these Specifications.

25.05.02 Materials

Aggregate Base shall be Class 2 conforming to Section 26, "Aggregate Bases" of the State Specifications.

Ramp and apron slab shall be constructed with Class 1 structural concrete in conformance with Article 29.01, "Structural Concrete," of these Specifications.

25.05.03 Placement

Subgrade shall be prepared as "Class A" per Section 21 "Subgrade Preparation" in the City of San Jose Standard Specifications.

Placement of the aggregate base and required compaction shall be in accordance with Section 26, "Aggregate Bases" of the State Specifications.

The Contractor shall keep the construction site dewatered and fee of standing water or excessively muddy conditions in accordance with Article 22.04. "Control of Water," of these Specifications.

The surface of the maintenance roads and ramps shall conform to the tolerances specified in Article 19.01 of these Specifications (±0.0" to -0.2").

25.05.04 Testing

Testing shall be per the requirements of Article 30.09 "Ramps, Apron Slabs, and Concrete" of these Specifications.

25.05.05 Submittals

Submittals shall be per the requirements of Article 30.09 “Ramps, Apron Slabs, and Concrete” of these Specifications.

25.05.06 Measurement

Measurement shall be per the requirements of Article 30.09 “Ramps, Apron Slabs, and Concrete” of these Specifications.

25.05.07 Payment

Full compensation for furnishing all labor, materials, tools, equipment, and incidentals and for doing all work required for the concrete maintenance road complete, in place, as shown on the Drawings, as specified in these Specifications and as directed by the Engineer, shall be included in the unit price per square foot for CONCRETE MAINTENANCE ROAD, Bid Item No. 15 and Bid Additive Item Nos. 65 and 130, if/when included in the awarded project by the District.

25.06 Decomposed Granite Maintenance Access – Bid Item Nos. 16, 66, 94, 131

25.06.01 Scope of Work

Decomposed Granite Maintenance Access shall consist of furnishing all labor, tools, equipment and incidentals to provide final decomposed granite maintenance access, including preparing subgrade including herbicide treatment, header board edging, placing and compacting aggregate base course, and stabilizing and placing decomposed granite at locations of the Decomposed Granite Maintenance Access shown on the Drawings, as specified in these Specifications, and as directed by the Engineer.

25.06.02 Materials

Decomposed granite shall be 9.5-mm minus material and shall conform to the following:

Grading Requirements (AASHTO T11-82 and T27-82)

Sieve Size	Percent Passing
9.5-mm	100
4.75-mm	95-100
2.36-mm	75-80
1.18-mm	55-65
600-µm	40-50
300-µm	25-35
150-µm	20-25
75-µm	5-15

The color of decomposed granite shall be California Gold.

Stabilizer shall be either a water-based polymer, or organic powdered binder specifically manufactured to harden decomposed granite. The stabilizer shall not alter the gravel color.

25.06.03 Placement

Herbicide Treatment: Apply chemical weed control agent, Ronstar G, in strict compliance with manufacturer's recommended dosages and application instructions. Apply Ronstar G prior to installation of Class II base rock.

Decomposed Granite shall be placed directly on native ground.

Blending Stabilizer: Blend 12 – 16 lbs. of Stabilizer per ton of decomposed granite. It is critical that Stabilizer be thoroughly and uniformly mixed throughout decomposed granite.

Placement of Decomposed Granite Screenings: Upon thorough moisture penetration, compact aggregate screenings to 90 to 95 percent relative compaction. Do not begin compaction for 6 hours after placement and up to 48 hours. Take care in compacting decomposed granite when adjacent to planting and irrigation systems.

Edging shall be installed to delineate the limits of the decomposed granite areas as shown on the plans and as specified in these special provisions. Edging will not be required between decomposed granite areas and the adjacent to the back of floodwalls, pavement edges, or rock blanket areas.

Solidifying emulsion shall be thoroughly and uniformly mixed throughout the decomposed granite per the manufacturer's recommendations. Material shall be mixed in the field using portable mixing equipment, or delivered in mixer trucks from a local ready-mixed plant. Decomposed granite shall be placed in maximum lifts of 1.5 inch layers.

Each layer of decomposed granite shall be raked to evenly blend various material, sizes forming a smooth uniform surface. Decomposed granite shall be moistened sufficiently to obtain the required compaction.

Decomposed granite areas shall receive a final application of solidifying emulsion as recommended by the manufacturer.

The Contractor shall prevent runoff or overspray of solidifying emulsion onto adjacent paved or planting areas.

When work is complete, the surface shall be smooth and uniform; maintaining original flow lines, slope gradient and contours of the project site.

25.06.04 Testing

Mock-up: Prior to installation of any portion of the Decomposed Granite Maintenance Access, install 4 ft. wide x 10 ft. long mock up of decomposed granite paving with Stabilizer additive at one location as directed by Engineer. Prior to preparing mock-up, the Contractor shall submit a 2 kg sample of decomposed granite to the Engineer for approval.

25.06.05 Submittals

Material Certificates: Provide copies of material certificates signed by material producer and Contractor, certifying that each material item complies with specified requirements. Additionally, provide “cut sheets” or product literature on all products to be used.

A Certificate of Compliance for the Stabilizer shall be furnished to the Engineer in conformance with the provisions in Section 6-1.07, "Certificates of Compliance," of the Standard Specifications.

25.06.06 Measurement

Measurement of decomposed granite shall be per square foot computed from the neat line dimensions shown on the Drawings.

25.06.07 Payment

Full compensation for furnishing all labor, materials, tools, equipment, and incidentals and for doing all work required for the Decomposed Granite Maintenance Access complete, in place, as shown on the Drawings, as specified in these Specifications and as directed by the Engineer, shall be included in the unit price per square foot for DECOMPOSED GRANITE MAINTENANCE ACCESS, Bid Item No. 16 and Bid Additive Item Nos. 66, 94, and 131, if/when included in the awarded project by the District.

Contractor shall be responsible for removal and replacement of any portion of the Decomposed Granite Maintenance Access that is damaged, defective or does not meet the requirements of these Specifications, at no cost to the District.

26 SITE UTILITIES

The Contractor's attention is directed to Article 15.02 "Utilities", 15.03 "Protection of Existing Improvements" and 15.04 "Site Review and Monitoring of Project Limits and Vicinity" of these Specifications.

26.01 Storm Drain

26.01.01 RCP Storm Drain

26.01.01.01 Scope of Work

RCP Storm Drain shall consist of furnishing and installing Reinforced Concrete Pipe (RCP) Storm Drain if required for storm drain outfall modification, including all labor materials, tools, equipment and incidentals and including all work.

26.01.01.02 Materials

RCP shall conform to the provisions of Section 65, "Reinforced Concrete Pipe", of the State Specifications, except as modified herein, and shall be Class III. No substitution of non-reinforced pipe will be allowed.

Pipe joints shall be bell and spigot type employed steel joint rings and rubber gaskets in accordance with City of San Jose Standard Specifications.

26.01.01.03 Placement

Pipe shall be placed per Section 101-3 "Laying" of the City of San Jose Standard Specifications.

Joints shall be set per Section 101-3.05C "Concrete Pipe" of the City of San Jose Standard Specifications.

Trench Excavation and backfill shall be per Sections 23.02 and 23.03 of these Specifications.

26.01.01.04 Testing

Testing for RCP Storm Drain installation shall be in accordance with Article 23.03 "Trench Backfill," of these Specifications, as directed by the Engineer.

RCP Storm Drain quality assurance and including inspection at the manufacturing plant shall be per Section 1207-2 "Reinforced Concrete Pipe (PVC)" of the City of San Jose Standard Specifications.

All pipes shall be inspected with closed-circuit television (CCTV) in accordance with Section 500-1.1.5, "Television Inspection," of the Greenbook, Section 1307-3, "Television Inspection," of the Standard Specifications, and these Special Provisions.

The Contractor shall submit the post-installation television inspection videos to the Engineer, for review, within ten (10) working days after pipe installation.

CCTV inspection and cleaning of the RCP Storm Drain shall be done as two separate operations. The operation of any cleaning equipment during video inspection shall not be permitted. A camera with pan and tilt capabilities shall be required for all television inspection and any irregularities in the installed pipe encountered during video inspection shall be panned to and viewed thoroughly before proceeding. The Contractor shall submit the television inspection DVD-R's and written logs to the Engineer immediately following the recording. Television inspection DVD'R's shall not be edited. If the Contractor does not comply with this section, the Contractor shall re-tape the pipeline at the Contractor's sole expense. DVD recordable shall be "DVD-R" not "DVD+R" and the video file format shall be mpg.

26.01.01.05 Submittals

Manufacturer's specifications and a certificate from the manufacturer shall be furnished certifying the proposed RCP storm drain pipe meets the requirements of this specification.

26.01.01.06 Measurement

RCP Storm Drain installed for a storm drain outfall modification shall not be measured.

26.01.01.07 Payment

Full compensation for furnishing all labor, materials, tools, equipment and incidentals for doing all work required for furnishing and installing or extending

round RCP Storm Drain as part of an outfall modification complete, in place, including television inspection if required, as shown on the Drawings, as specified in these Specifications, and as directed by the Engineer, shall be included in the lump sum price bid for STORM DRAIN OUTFALL MODIFICATIONS, Bid Item No. 19, and Bid Additive Item Nos. 68, 95, and 132, if/when included in the awarded project by the District and no separate payment will be made therefore.

26.01.02 CMP Storm Drain – Bid Item Nos. 17, 18, 67

26.01.02.01 Scope of Work

CMP Storm Drain shall consist of furnishing and installing various sizes Corrugated Metal Pipe (CMP) Storm Drain including all labor materials, tools, equipment and incidentals and including all work.

26.01.02.02 Materials

CMP shall conform to the provisions of Section 66, Corrugated Metal Pipe, of the State Specifications. CMP shall be a minimum 14-gauge for steel pipe and 12-gauge for aluminum pipe. Contact between steel and aluminum will not be allowed.

26.01.02.03 Placement

Pipe shall be placed per Section 66-1.05 “Laying Pipe” of the State Specifications.

Coupling Bands, if used, shall conform with Section 66-1.07 “Coupling Bands” of the State Specifications.

Trench Excavation and backfill shall be per Sections 23.02 and 23.03 of these Specifications.

26.01.02.04 Testing

Testing for CMP Storm Drain installation shall be in accordance with Article 23.03 “Trench Backfill,” of these Specifications, as directed by the Engineer.

All pipes shall be inspected with closed-circuit television (CCTV) in accordance with Section 500-1.1.5, “Television Inspection,” of the Greenbook, Section 1307-3, “Television Inspection,” of the Standard Specifications, and these Special Provisions.

The Contractor shall submit the post-installation television inspection videos to the Engineer, for review, within ten (10) working days after pipe installation.

CCTV inspection and cleaning of the CMP Storm Drain shall be done as two separate operations. The operation of any cleaning equipment during video inspection shall not be permitted. A camera with pan and tilt capabilities shall be required for all television inspection and any irregularities in the installed pipe encountered during video inspection shall be panned to and viewed thoroughly before proceeding. The Contractor shall submit the television inspection DVD-R's and written logs to the Engineer immediately following the recording. Television inspection DVD'R's shall not be edited. If the Contractor does not comply with this section, the Contractor shall re-tape the pipeline at the Contractor's sole expense. DVD recordable shall be "DVD-R" not "DVD+R" and the video file format shall be mpg.

26.01.02.05 Submittals

Manufacturer's specifications and a certificate from the manufacturer shall be furnished certifying the CMP storm drain pipe meets the requirements of this specification.

26.01.02.06 Measurement

Measurement for payment purposes for CMP Storm Drain installed in streets, separate from a Storm Drain Outfall Modification shall be on a linear foot basis, per Section 101-4.01 "Measurement", of the City of San Jose Standard Specifications.

CMP Storm Drain installed for a storm drain outfall modification shall not be measured.

26.01.02.07 Payment

Full compensation for furnishing all labor, materials, tools, equipment and incidentals for doing all work required for furnishing and installing CMP Storm Drain installed in streets, separate from the Storm Drain Outfall Modification, complete, in place, including television inspection if required, as shown on the Drawings, as specified in these Specifications, and as directed by the Engineer, shall be included in the unit price bid per linear foot for various sizes of CMP STORM DRAIN, Bid Item Nos. 17 and 18 and Bid Additive Item No. 67, if/when included in the awarded project by the District.

Full compensation for furnishing all labor, materials, tools, equipment and incidentals for doing all work required for furnishing and installing or extending CMP Storm Drain that is part of an outfall modification complete, in place as shown on the Drawings, as specified in these Specifications, and as directed by the

Engineer, shall be included in the lump price bid for STORM DRAIN OUTFALL MODIFICATIONS, Bid Item No. 19, and Bid Additive Item Nos. 68, 95, and 132, if/when included in the awarded project by the District and no separate payment will be made therefore.

26.01.03 Storm Drain Outfall Modifications – Bid Item Nos. 19, 68, 95, 132

26.01.03.01 Scope of Work

Storm drain outfall modification work shall consist of all work and materials necessary to conform existing or new pipes and/or outfalls to: new concrete box culvert structures; concrete wingwall transition structures; retaining/flood walls structures; and earthen channel slopes. Work shall include, but not be limited to supply and install new pipe (RCP, CMP or other), supply and install new CMP pipe within new outfalls, flap gates, manholes, and all other miscellaneous drainage work required to construct or modify Storm Drain Outfalls, complete, in place, at various locations, as shown on the Drawings, in accordance with State Specifications, and these Specifications, and as directed by the Engineer.

Abandonment and removal of existing pipe, outfall structure, and conflicting pavements, curb and gutter and sidewalk shall be paid for as set forth in the Article 22.03.04 “Abandon, Removal, Salvage, Relocation of Existing Facilities” of these Specifications.

The new pipe material is required to extend the existing outfall pipe shall be included in the unit price for the respective Storm Drain Outfall Modification.

The Contractor shall verify the size and type of all existing outfalls and pipes shown on the Drawings prior to ordering any materials required to modify the outfalls. Any deviations found shall be presented to the Engineer in writing.

26.01.03.02 Materials

Excavation and backfill shall conform to Article 23.04, “Structural Excavation,” and Article 23.05, “Structural Backfill,” of thee Specifications. Trench excavation and backfill shall conform to Article 23.02, “Trench Excavation,” and Article 23.05, “Trench Backfill,” of these Specifications.

Flap gates, if required, shall be cast iron frame and cover, Waterman F-10 or Fresno 10C.

Concrete for collars, as shown on the Drawings, shall be in accordance with Article 29.01, “Structural Concrete,” of these Specifications.

26.01.03.03 Placement

New or existing pipe at the outfalls shall be cut flush with the concrete wall faces and earth slopes.

Where necessary, existing outfalls shall be extended with CMP, or RCP, at least 3-inches larger in diameter than the existing pipe, and be flush with the concrete structures (retaining walls, RCB walls, wingwall transitions) as shown on the Drawings.

26.01.03.04 Testing

Testing for outfall modifications shall be in accordance with Article 23.05, "Structural Backfill," of these Specifications, as directed by the Engineer.

26.01.03.05 Submittals

Submittals for backfill material for outfall modifications shall be in accordance with Article 22.05, "Structural Backfill," of these Specifications, as directed by the Engineer.

26.01.03.06 Measurement

Measurements are not required for storm drain outfalls.

26.01.03.07 Payment

Full compensation for furnishing all labor, materials, tools, equipment and incidentals and for doing all work required for conforming existing or new pipes and/or outfalls to: new concrete box culvert structures; concrete wingwall transition structures; retaining/flood walls structures; and earthen channel slopes, and for supplying and installing new pipe (RCP, CMP or other), supplying and installing new CMP pipe within outfalls, flap gates, manholes, and all other miscellaneous drainage work required to construct or modify Storm Drain Outfalls complete, in place as shown on the Drawings, as specified in these Specifications and as directed by the Engineer, shall be paid for at the lump sum price bid for STORM DRAIN OUTFALL MODIFICATIONS, Bid Item No. 19 and Bid Additive Item Nos. 68, 95, and 132, if/when included in the awarded project by the District and no separate payment will be made therefore.

26.01.04 Storm Drain and Sanitary Sewer Manholes – Bid Item Nos. 20, 96

26.01.04.01 Scope of Work

Storm drain and Sanitary Sewer manholes shall consist of all work and materials necessary to install storm drain manholes including structural excavation and backfill, compaction, manhole frame and cover, saw cutting of the roadway, plugging or connecting pipelines, incidental road resurfacing and other miscellaneous work as shown on the Drawings, as specified in these Specifications and as directed by the Engineer.
This work does not include the Siphon Manholes included with Article 26.02.04 "Sanitary Sewer Siphon-Bore and Jack" and Article 26.02.05 "Sanitary Sewer Siphon – Open Cut" of these Specifications.

26.01.04.02 Materials

Concrete for the manholes shall be in accordance with Article 29.01, "Structural Concrete," of these specifications.

Manhole construction shall conform to provisions of Section 51, "Concrete Structures", and Section 70, "Miscellaneous Facilities", of the State Specifications.

Manhole Construction and Frames and Covers shall be City of San Jose standard manhole, frame and cover as indicated on the Drawings, per City Standard Drawings and Specifications.

Reinforcing steel shall be Grade 60, deformed bars conforming to Section 52, "Reinforcement", of the State Specifications.

Structural excavation and backfill shall conform to the provisions in Section 23, "Earthwork," of these Specifications.

Exposed surfaces shall be plywood formed; others shall be steel, matched boards, plywood or other acceptable material. The Contractor shall form trench walls; large rock or earth shall not be used as form material.

Precast manhole sections shall conform to ASTM C478. Joints shall be tongue-and-groove with rubber gaskets and furnished by manhole manufacturer.

Preformed plastic gaskets shall be Kent-Seal No. 2 manufactured by Hamilton Kent Manufacturing Company, Box 178, Ohio 44240; Ram-Nek, manufactured by K.T. Snyder Company, Inc., Central National Bank Building, Houston, Texas 77002, or equal, meeting all requirements of ASTM C990.

26.01.04.03 Placement

Poured-in-place type manholes may be used in conformance with Section 51, "Concrete Structures", of the State Specifications, provided all details of construction are approved by the Engineer.

Precast manhole sections shall conform to ASTM C478. Cones shall have same wall thickness and reinforcement as manhole section. Top and bottom of all sections shall be parallel. Joints shall be tongue-and-groove with preformed plastic gaskets.

Manhole Frame and Cover shall be City of San Jose standard manhole, frame and cover as indicated on the Drawings, installed per City of San Jose Specifications.

The Contractor shall construct concrete base in conformance with the details shown on the Drawings.

Shoring shall comply with Article 23.02, "Trench Excavation" and Article 23.03, "Trench Backfill," of these Specifications.

The Contractor shall vibrate to densify concrete and screen so first precast manhole section to be placed has a level, uniform bearing for full circumference.

The Contractor shall deposit sufficient mortar on base to assure watertight seal between base and manhole wall, or place first precast section of manhole in concrete base before concrete has set and properly locate and plumb first section.

The Contractor shall construct manhole inverts in conformance with details shown on the Drawings and with smooth transitions to ensure an unobstructed flow through manhole. The Contractor shall remove sharp edges or rough sections, which tend to obstruct flow.

Where full section of pipe is laid through manhole, the Contractor shall break out top section as shown on cover exposed edge of pipe completely with mortar and trowel mortar surfaces smooth.

The Contractor shall carefully inspect precast manhole sections to be joined. Sections with chips or cracks in the tongue shall not be used.

The Contractor shall install frames and covers on top of manholes to positively prevent infiltration of surface into manholes

The Contractor shall set frames in bed of mortar carried over flange of the ring as shown on the Drawings.

The Contractor shall set frames so corners are flush with surface of adjoining pavement or ground surface, unless otherwise shown or directed.

Plugging and abandoning of existing storm drain pipes shall conform to Section 15-2.05A, Frames, Covers, Grates and Manholes, of the State Specifications.

Excavation and backfill shall comply with Article 23.04, "Structural Excavation," and Article 23.05, "Structural Backfill," of these Specifications.

26.01.04.04 Testing

Prior to delivery of any size precast manhole section to jobsite, the Contractor shall conduct yard tests at point of manufacture. Precast section to be tested will be selected at random from stockpiled material to be supplied for the job. All test specimens shall be mat tested and meet the permeability test requirements of ASTM C14.

Testing for the storm drain manholes shall be in accordance with Article 23.05, "Structural Backfill," and Article 29.01, "Structural Concrete," of these Specifications.

26.01.04.05 Submittals

Submittals for the storm drain manholes shall be in accordance with Article 23.05, "Structural Backfill," and Article 29.01, "Structural Concrete," of these Specifications.

26.01.04.06 Measurement

Measurement shall be measured on a per each basis.

26.01.04.07 Payment

Full compensation for furnishing all labor, materials, tools, equipment and incidentals and for doing all work required for storm drain and sanitary sewer manhole construction complete, in place as shown on the Drawings, as specified in these Specifications and as directed by the Engineer, shall be paid for at the unit bid price per each for STORM DRAIN AND SANITARY SEWER MANHOLES, Bid Item No. 20 and Bid Additive Item No. 96, if/when included in the awarded project by the District and no separate payment will be made therefore.

26.02 Sanitary Sewer

26.02.01 VCP Sanitary Sewer Main – Bid Item Nos. 21, 22, 23, 24

26.02.01.01 Scope of Work

VCP Sanitary Sewer Main shall consist of furnishing and installing Vitrified Clay Pipe (VCP) Sanitary Sewer Main, including all labor materials, tools, equipment and incidentals to install pipe, complete, in place.

26.02.01.02 Materials

VCP shall be extra strength in accordance with the requirements set forth in ASTM C-700 and shall be in accordance with Section 1207 “Pipe and Structures” of the City of San Jose Standard Specifications.

Pipe ends shall be square with the longitudinal axis, and sockets shall be true, circular, and concentric with the barrel of the pipe. The ends of the pipe shall be formed allowing the pipes, when laid together with the joints, to make a continuous and uniform line of pipe, shall have a smooth and regular interior surface.

The following imperfections in a pip or fitting shall be cause for rejection:

A. Any surface fire crack in the ends of the spigot, or bell, which exceed 1 inch in length.

B. Having any piece broken from the bell end of the pipe or fitting

Joints shall be Type G, Bell and Spigot. 4-inch ES VCP shall be used for sanitary sewer laterals.

26.02.01.03 Placement

Pipe shall be placed the manufacturer’s directions and per Section 1302 “Pipe Installation” of the City of San Jose Standard Specifications.

Joints shall be set per the manufacturer’s directions.

Bell holes shall be hand dug at the location of the joints and shall be of sufficient size to allow proper making of the joint to prevent the collar or bell of the pipe from bearing on the bottom of the trench. Bell hole material shall not be “mounded” under the pipe, but shall be cast against the side of the trench, so that pipe length bears uniformly on the bedding material.

Sanitary sewer flows shall be maintained per Article 15.02.01 F "Utility Coordination" of these Specifications.

Trench Excavation and backfill shall be per Sections 23.02 and 23.03 of these Specifications.

A factory wye fitting shall be used to connect to the main per Detail D-3 "Side Sewer/Lateral Fittings to Existing Mains," of the City of San Jose Standard Plan Details.

Extension of a certain length of sanitary sewer lateral from the existing later to the newly relocated sewer main may be required in order to construct a smooth transition from the property and to facilitate reconnection at the new sewer main location.

Replacement of a certain length of existing sanitary sewer lateral from the new sewer main toward each served property may be required in order to construct a smooth transition from the property and to facilitate reconnection at the new sewer main elevation.

26.02.01.04 Testing

Testing for VCP Sanitary Sewer Main installation shall be in accordance with Article 23.03, "Trench Backfill," of these Specifications, as directed by the Engineer.

VCP to be installed which do not have service lateral connections, shall be tested for leakage using the Air Pressure Test as specified in Section 1307-2.1, "Air Pressure Test," of the City of San Jose Standard Specifications.

All VCP with or without laterals shall be inspected with closed-circuit television (CCTV) in accordance with Section 500-1.1.5, "Television Inspection," of the Greenbook, Section 1307-3, "Television Inspection," of the Standard Specifications, and these Special Provisions.

The Contractor shall submit the post-installation television inspection videos to the Engineer, for review, within ten (10) working days after pipe installation.

CCTV inspection and cleaning of the VCP Sanitary Sewer Main shall be done as two separate operations. The operation of any cleaning equipment during video inspection shall not be permitted. A camera with pan and tilt capabilities shall be required for all television inspection and any irregularities in the installed pipe encountered during video inspection shall be panned to and viewed thoroughly

before proceeding. The Contractor shall submit the television inspection DVD-R's and written logs to the Engineer immediately following the recording. Television inspection DVD'R's shall not be edited. If the Contractor does not comply with this section, the Contractor shall re-tape the pipeline at the Contractor's sole expense. DVD recordable shall be "DVD-R" not "DVD+R" and the video file format shall be mpg.

26.02.01.05 Submittals

A certificate from the manufacturer shall be furnished certifying the pipe meets the requirements of this specification and the 3-edge bearing method requirements of ASTM C 301 to withstand the minimum 3-edge test loads indicated in Table 207-8.5.3 of the 2006 Edition of the Standard Specifications for Public Works Construction.

26.02.01.06 Measurement

Measurement for payment purposes for VCP Sanitary Sewer Main shall be on a linear foot basis, per Section 101-4.01 "Measurement", of the City of San Jose Standard Specifications.

26.02.01.07 Payment

Full compensation for furnishing all labor, materials, tools, equipment and incidentals for doing all work required for supplying and installing VCP sanitary sewer main including television inspection, complete, in place, as shown on the Drawings, as specified in these Specifications, and as directed by the Engineer, shall be included in the unit price bid per linear for various sizes of VCP SANITARY SEWER MAIN, Bid Item Nos. 21 thru 24.

26.02.02 DIP Sanitary Sewer Main – Bid Item Nos. 25 and 26

26.02.02.01 Scope of Work

DIP Sanitary Sewer Main shall consist of furnishing and installing Class 50, ceramic epoxy interior lined Ductile Iron Pipe (DIP) Sanitary Sewer Main, exterior encased in a polyethylene tube, including all labor materials, tools, equipment and incidentals to install pipe, complete, in place.

26.02.02.02 Materials

DIP shall be gasketed bell and spigot joint pipe, ANSI/AWWA C151/A21.51, gasket-ANSI/AWWA C111/A21.11, class 50.

DIP shall have internal ceramic epoxy lining of at least 40 mills in nominal thickness, solvent-free, shall not shrink during the curing process, and shall conform to the latest revision of Protecto 40 Ceramic Epoxy Lining.

Joints and fittings shall be set per Section 101-2.01B "Joints" and Section 101-2.01C "Fittings", of the City of San Jose Standard Specifications.

DIP shall be US Pipe and foundry Co., Polyurethane-lined Tyton Joint DIP and fittings, or approved equal.

26.02.02.03 Placement

Pipe shall be placed per Section 101-3 "Laying" of the City of San Jose Standard Specifications.

The exterior of the pipe shall be encased in a polyethylene tube that conforms to ANSI/AWWA A21.5/C105.

Field installation shall be set per the manufacturer's direction and per Section 101-3.05A "Field Joints – Ductile Iron Pipe" of the City of San Jose Standard Specifications.

Bell holes shall be hand dug at the location of the joints and shall be of sufficient size to allow proper making of the joint to prevent the collar or bell of the pipe from bearing on the bottom of the trench. Bell hole material shall not be "mounded" under the pipe, but shall be cast against the side of the trench, so that pipe length bears uniformly on the bedding material.

Sanitary sewer flows shall be maintained per Article 15.02.01 F "Utility Coordination" of these Specifications.

Trench Excavation and backfill shall be per Sections 23.02 and 23.03 of these Specifications.

26.02.02.04 Testing

Testing for DIP Sanitary Sewer Main installation shall be in accordance with Article 23.03, "Trench Backfill," of these Specifications, as directed by the Engineer.

DIP shall be tested for leakage using using the hydrostatic leakage test as specified in Section 1307-2.2, "Hydrostatic Leakage Test," of the City of San Jose Standard Specifications.

All pipes shall be inspected with closed-circuit television (CCTV) in accordance with Section 500-1.1.5, "Television Inspection," of the Greenbook, Section 1307-3, "Television Inspection," of the Standard Specifications, and these Special Provisions.

The Contractor shall submit the post-installation television inspection videos to the Engineer, for review, within ten (10) working days after pipe installation.

CCTV inspection and cleaning of the DIP Sanitary Sewer Main shall be done as two separate operations. The operation of any cleaning equipment during video inspection shall not be permitted. A camera with pan and tilt capabilities shall be required for all television inspection and any irregularities in the installed pipe encountered during video inspection shall be panned to and viewed thoroughly before proceeding. The Contractor shall submit the television inspection DVD-R's and written logs to the Engineer immediately following the recording. Television inspection DVD'R's shall not be edited. If the Contractor does not comply with this section, the Contractor shall re-tape the pipeline at the Contractor's sole expense. DVD recordable shall be "DVD-R" not "DVD+R" and the video file format shall be mpg.

26.02.02.05 Submittals

Manufacturer's specifications and a certificate from the manufacturer shall be furnished certifying the DIP sanitary sewer pipe meets the requirements of this specification.

26.02.02.06 Measurement

Measurement for payment purposes for DIP sanitary sewer main shall be on a linear foot basis, per Section 101-4.01 "Measurement", of the City of San Jose Standard Specifications.

26.02.02.07 Payment

Full compensation for furnishing all labor, materials, tools, equipment and incidentals for doing all work required for supplying, furnishing and installing Class 50, ceramic epoxy lined Ductile Iron Pipe (DIP) Sanitary Sewer Main with the exterior encased in a polyethylene tube including television inspection, complete, in place, as shown on the Drawings, as specified in these Specifications, and as directed by the Engineer, shall be included in the unit price bid per linear foot for DIP SANITARY SEWER MAIN, Bid Item Nos. 25 and 26.

26.02.03 PVC Pipe and Penrod Place PVC Storm Structure – Bid Item No. 27

26.02.03.01 Scope of Work

Polyvinyl Chloride Pipe (PVC) shall consist of furnishing and installing PVC pipe, including all labor materials, tools, equipment and incidentals to install air-jumper pipes at the sewer siphon locations, complete, in place.

Penrod Place PVC Storm Structure shall consist of furnishing all labor, materials, tools, equipment and incidentals for doing all work required for constructing the Penrod Place PVC Storm Structure, including fittings, assembly, connection to manholes, backfill and compaction, roadway restoration, and television inspection, as shown on the Drawings, as specified in these Specifications, and as directed by the Engineer, complete, in place.

26.02.03.02 Materials

PVC shall conform to AWWA C900 and to the requirements of Section 101-2.02 “Polyvinyl Chloride (PVC) Pipe” of the City of San Jose Standard Specifications.

Joints and Fittings shall be set per Section 101-202A & B “Joints” and “Fittings, respectively, of the City of San Jose Standard Specifications.

26.02.03.03 Placement

Pipe shall be placed per Section 101-3 “Laying” of the City of San Jose Standard Specifications.

Joints and fittings shall be set per the manufacturer’s direction and per Section 101-3.05B “Field Joints - Polyvinyl Chloride Pipe” of the City of San Jose Standard Specifications.

Bell holes shall be hand dug at the location of the joints and shall be of sufficient size to allow proper making of the joint to prevent the collar or bell of the pipe from bearing on the bottom of the trench. Bell hole material shall not be “mounded” under the pipe, but shall be cast against the side of the trench, so that pipe length bears uniformly on the bedding material.

Sanitary sewer flows shall be maintained per Article 15.02.01 F “Utility Coordination” of these Specifications.

Trench Excavation and backfill shall be per Sections 23.02 and 23.03 of these Specifications and per the 1992 City of San Jose Standard Plans and Specifications.

26.02.03.04 Testing

Testing for PVC pipe installation shall be in accordance with Article 23.03, "Trench Backfill," of these Specifications, as directed by the Engineer.

PVC Air Jumpers shall be tested for leakage using the Air Pressure Test as specified in Section 1307-2.1, "Air Pressure Test," of the City of San Jose Standard Specifications.

All pipes shall be inspected with closed-circuit television (CCTV) in accordance with Section 500-1.1.5, "Television Inspection," of the Greenbook, Section 1307-3, "Television Inspection," of the Standard Specifications, and these Special Provisions.

The Contractor shall submit the post-installation television inspection videos to the Engineer, for review, within ten (10) working days after pipe installation.

CCTV inspection and cleaning of the PVC pipe shall be done as two separate operations. The operation of any cleaning equipment during video inspection shall not be permitted. A camera with pan and tilt capabilities shall be required for all television inspection and any irregularities in the installed pipe encountered during video inspection shall be panned to and viewed thoroughly before proceeding. The Contractor shall submit the television inspection DVD-R's and written logs to the Engineer immediately following the recording. Television inspection DVD'R's shall not be edited. If the Contractor does not comply with this section, the Contractor shall re-tape the pipeline at the Contractor's sole expense. DVD recordable shall be "DVD-R" not "DVD+R" and the video file format shall be mpg.

26.02.03.05 Submittals

Manufacturer's specifications and a certificate from the manufacturer shall be furnished certifying the PVC pipe meets the requirements of this specification.

26.02.03.06 Measurement

PVC Pipe and Penrod Place PVC Storm Structure will not be measured.

26.02.03.07 Payment

Full compensation for furnishing all labor, materials, tools, equipment and incidentals for doing all work required for constructing the Penrod Place PVC Storm Structure, including fittings, assembly, connection to manholes, backfill and

compaction, roadway restoration, and television inspection, complete, in place, as shown on the Drawings, as specified in these Specifications, and as directed by the Engineer, shall be included in the lump sum price bid for PENROD PLACE PVC STORM STRUCTURE – Bid Item No. 27.

Full compensation for furnishing all labor, materials, tools, equipment and incidentals for doing all work required for supplying, furnishing and installing Polyvinyl Chloride (PVC) Sanitary Sewer for the siphon air jumpers including television inspection, complete, in place, as shown on the Drawings, as specified in these Specifications, and as directed by the Engineer, shall be included in the respective lump sum price bid for SANITARY SEWER SIPHON - Bore and Jack No. 28 and SANITARY SEWER SIPHON – OPEN CUT – Bid Item No. 29, and no separate payment will be made, therefore.

26.02.04 Sanitary Sewer Siphon – Bore and Jack Bid Item No. 28

26.02.04.01 Scope of work

Contractor shall provide all labor materials, tools, equipment and incidentals to install the Sanitary Sewer Siphon – Bore and Jack, including steel casing, jacking (bore) and receiving pit excavation and backfill, installing DIP Sanitary Sewer Main, supplying and installing PVC air-jumper pipe and concrete encasement, siphon manholes, and other appurtenances to provide a functioning sanitary sewer siphon, complete, in place.

The cost of supplying the DIP Sanitary Sewer Main pipe is not included in this scope of work.

26.02.04.02 Materials

Air-jumper pipe shall be PVC, meeting the requirements of Section 26.02.03 “PVC Sanitary Sewer” of these Specifications.

Manhole Frame and Cover shall be City of San Jose standard manhole, frame and cover as indicated on the Drawings.

Concrete encasement shall conform to the requirements of Article 29.01, “Structural Concrete” of these Specifications.

Steel Casing shall be welded steel in the diameter and minimum thickness as shown on the Drawings.

26.02.04.03 Placement

Trench Excavation and backfill of the receiving pit and bore pit shall be per Sections 23.02 “Trench Excavation” and 23.03 “Trench Backfill” of these Specifications.

Trench Excavation and backfill for the air-jumper pipe shall be per Sections 23.02 and 23.03 of these Specifications.
Sanitary sewer flows shall be maintained per Article 15.02.01 F “Utility Coordination” of these Specifications.

Manhole Frame and Cover shall be City of San Jose standard manhole, frame and cover as indicated on the Drawings, installed per City of San Jose Specifications.

26.02.04.04 Testing

Testing for PVC air-jumper pipe installation shall be in accordance with Article 23.03, “Trench Backfill,” of these Specifications, as directed by the Engineer.

All pipes shall be inspected with closed-circuit television (CCTV) in accordance with Section 500-1.1.5, “Television Inspection,” of the Greenbook, Section 1307-3, “Television Inspection,” of the Standard Specifications, and these Special Provisions.

The Contractor shall submit the post-installation television inspection videos to the Engineer, for review, within ten (10) working days after pipe installation.

CCTV inspection and cleaning of the PVC air-jumper pipe shall be done as two separate operations. The operation of any cleaning equipment during video inspection shall not be permitted. A camera with pan and tilt capabilities shall be required for all television inspection and any irregularities in the installed pipe encountered during video inspection shall be panned to and viewed thoroughly before proceeding. The Contractor shall submit the television inspection DVD-R’s and written logs to the Engineer immediately following the recording. Television inspection DVD’R’s shall not be edited. If the Contractor does not comply with this section, the Contractor shall re-tape the pipeline at the Contractor’s sole expense. DVD recordable shall be “DVD-R” not “DVD+R” and the video file format shall be mpg.

26.02.04.05 Submittals

Submittals for the air-jumper pipe shall meet the requirements of Section 26.02.03 "PVC Sanitary Sewer" of these Specifications.

Manufacturer's specifications and a certificate from the manufacturer shall be furnished certifying the steel casing pipe meets the requirements of this specification.

26.02.04.06 Measurement

Sanitary Sewer Siphon – Bore and Jack will not be measured.

Supply of the DIP Sanitary Sewer Main pipe is included in the unit price bid per linear for DIP Sanitary Sewer Main per Article 26.02.02 "DIP Sanitary Sewer Main" of these Specifications, and is not included in this item.

26.02.04.07 Payment

Full compensation for furnishing all labor, materials, tools, equipment and incidentals for doing all work required for install the Sanitary Sewer Siphon – Bore and Jack, including furnishing and installing steel casing, jacking (bore) and receiving pit excavation and backfill, installing DIP Sanitary Sewer Main, supplying and installing PVC air-jumper pipe and concrete encasement, siphon manholes, and other appurtenances to provide a functioning sanitary sewer siphon, including television inspection, complete, in place, as shown on the Drawings, as specified in these Specifications, and as directed by the Engineer, shall be included in the lump sum price bid for SANITARY SEWER SIPHON – BORE AND JACK, Bid Item No. 28

26.02.05 Sanitary Sewer Siphon –Open Cut Bid Item No. 29

26.02.05.01 Scope of work

Contractor shall provide all labor materials, tools, equipment and incidentals to install the Sanitary Sewer Siphon – Open Cut, including DIP Sanitary Sewer Main installation, PVC air-jumper pipe and concrete encasement, siphon manholes, television inspection, and other appurtenances to provide a functioning sanitary sewer siphon, complete, in place.

The cost of supplying the DIP Sanitary Sewer Main material is not included in this scope of work.

26.02.05.02 Materials

Air-jumper pipe shall be PVC, meeting the requirements of Section 26.02.03 "PVC Sanitary Sewer" of these Specifications.
Manhole Frame and Cover shall be City of San Jose standard manhole, frame and cover as indicated on the Drawings.

Concrete encasement shall conform to the requirements of Article 29.01, "Structural Concrete" of these Specifications.

26.02.05.03 Placement

Trench Excavation and backfill for the DIP Sanitary Sewer Main and the air-jumper pipe shall be per Sections 23.02 and 23.03 of these Specifications.

Sanitary sewer flows shall be maintained per Article 15.02.01 F "Utility Coordination" of these Specifications.
Manhole Frame and Cover shall be City of San Jose standard manhole, frame and cover as indicated on the Drawings, installed per City of San Jose Specifications.

26.02.05.04 Testing

Testing for PVC air-jumper pipe installation shall be in accordance with Article 23.03, "Trench Backfill," of these Specifications, as directed by the Engineer.

All pipes shall be inspected with closed-circuit television (CCTV) in accordance with Section 500-1.1.5, "Television Inspection," of the Greenbook, Section 1307-3, "Television Inspection," of the Standard Specifications, and these Special Provisions.

The Contractor shall submit the post-installation television inspection videos to the Engineer, for review, within ten (10) working days after pipe installation.

CCTV inspection and cleaning of the PVC air-jumper pipe shall be done as two separate operations. The operation of any cleaning equipment during video inspection shall not be permitted. A camera with pan and tilt capabilities shall be required for all television inspection and any irregularities in the installed pipe encountered during video inspection shall be panned to and viewed thoroughly before proceeding. The Contractor shall submit the television inspection DVD-R's and written logs to the Engineer immediately following the recording. Television inspection DVD'R's shall not be edited. If the Contractor does not comply with this section, the Contractor shall re-tape the pipeline at the Contractor's sole expense. DVD recordable shall be "DVD-R" not "DVD+R" and the video file format shall be mpg.

26.02.05.05 Submittals

Submittals for the air-jumper pipe shall meet the requirements of Section 26.02.03 "PVC Sanitary Sewer" of these Specifications.

Submittals for the Concrete encasement shall conform to the requirements of Article 29.01 "Structural Concrete" of these Specifications.

26.02.05.06 Measurement

Sanitary Sewer Siphon – Open Cut will not be measured.

Supply of the DIP Sanitary Sewer Main Pipe is included in the unit price bid per linear for DIP sanitary sewer main per Article 26.02.02 "DIP Sanitary Sewer Main" of these Specificaitons, and is not included in this item.

26.02.05.07 Payment

Full compensation for furnishing all labor, materials, tools, equipment and incidentals for doing all work required for install the Sanitary Sewer Siphon – Open Cut, including DIP Sanitary Sewer Main installation, furnishing and installing PVC air-jumper pipe and concrete encasement, siphon manholes, television inspection, and other appurtenances to provide a functioning sanitary sewer siphon including television inspection, complete, in place, as shown on the Drawings, as specified in these Specifications, and as directed by the Engineer, shall be included in the lump sum price bid for SANITARY SEWER SIPHON – OPEN CUT, Bid Item No. 29.

.

27 TRAFFIC CONTROL

27.01 Traffic Control – Bid Item Nos. 30, 31, 97, 98, 133, 134

27.01.01 Scope of Work

A. Traffic Control shall consist of all work and materials necessary to maintain traffic and pedestrian access during all stages of the construction as shown on the Contractor's Traffic Control Plan(s), the Drawings, as specified in these Specifications, and as directed by the Engineer, including:

- preparation of, and approval by the City of San Jose and Santa Clara County Roads and Airports, of the Contractor's traffic control plan(s) showing the maintenance traffic and pedestrian access within the project limits throughout all stages of construction, per this Article, per General Provisions Article 6.32 "Traffic Control" and per Special Provisions Article 17.06 "Traffic Control" of these Specifications.
- remove and replace traffic control markings and systems throughout the construction stages;
- remove and replace fencing, railing, Type K railing, barricade, and crash cushions throughout the construction stages;
- remove and replace channelizers, pavement striping, pavement markings, pavement markers, and construction area signs throughout the construction stages;
- providing crossing guards on Jackson Avenue, Capitol Expressway, Story Road, Murtha Drive and Moss Point Drive as necessary throughout the construction stages, including for bus stops, as required;
- Traffic Control at Penrod Place during the installation of the sanitary sewer and the Penrod Place PVC Storm Structure;
- all other miscellaneous work necessary throughout the construction stages for the project to complete the traffic control as required to complete all items of work.

B. The Contractor shall maintain traffic at the project area per the requirements of the City of San Jose. Capitol Expressway traffic shall also be maintained per the requirements of Santa Clara County Roads and Airports. Conceptual traffic control plans have been included in the Drawings. Contractor's Traffic control plan(s) shall be prepared by a

registered Civil or Traffic Engineer and submitted to the Engineer, the City of San Jose, and Santa Clara County Roads and Airports for approval.

C. The Contractor shall cooperate with the City of San Jose and Santa Clara County Roads and Airports authorities relative to handling traffic around the construction area and shall make arrangements relative to keeping the working area clear of parked vehicles so as to maintain sight visibility and access to adjacent properties.

D. The Contractor shall conduct operations and schedule cleanup so as to cause the least possible obstruction and inconvenience to traffic, pedestrians, cyclists, and adjacent property owners. All streets and sidewalk areas shall be swept clean in accordance with Article 11.03, “Site Maintenance and Cleanup”, of these Specifications.

E. Damage done by the Contractor during the course of work to adjacent city or private property shall be repaired or replaced in kind in accordance with Article 15.05, “Rights of Way,” of these Specifications, or as directed by the Engineer.

F. Personal vehicles of the Contractor's employees, and the Contractor's equipment and vehicles shall not be parked on the traveled way or shoulders at any time. When entering or leaving roadways carrying public traffic, the Contractor's equipment, whether empty or loaded, shall in all cases yield to public traffic and shall travel in the direction of the traffic. Flaggers and traffic signs may be required to control this activity.

G. When the entering or leaving time of the Contractor’s equipment coincide with the children going to or leaving any schools in the area, in addition to providing flaggers, the Contractor shall also provide crossing guards at the Contractor’s ingress and egress locations to direct the children crossing the roadway as directed by the Engineer.

H. Those parts of public streets, right of way and sidewalks that are occupied by the Contractor, as approved by the Engineer, shall be immediately vacated and returned to public use when use thereof is no longer necessary for the construction work. For long-term situations where construction work will be delayed for over 30 days, temporary traffic control measures shall be removed and streets restored to public use.

I. Attention is directed to Section 7-1.08, “Public Convenience”, Section 7-1.09, “Public Safety”, and Section 12, “Construction Area Traffic Control Devices”, of the State Specifications, and Article 6.09, “Public Safety,” and Article 16.01, “Safety,” of these Specifications.

Nothing in these Specifications shall be construed as relieving the Contractor from responsibility as provided in said Section 7-1.09, “Public Safety”, of the State Specifications.

J. During hauling and excavation operations, a traffic lane on a two-lane street may be closed for periods not to exceed 5 minutes. Such traffic sign and flaggers as approved by the City of San Jose and/or Santa Clara County Roads and Airports for said lane closure shall be in place prior to closing the lane to traffic. After each closure, all accumulated traffic shall be allowed to pass through the affected area before another closure is permitted.

K. No work that interferes with public traffic shall be performed before 8:30 a.m., nor after 3:30 p.m. on Jackson Avenue, Capitol Expressway, Story Road, Murtha Drive and Moss Point Drive, except work required under Section 7-1.08, “Public Convenience”, and Section 7-1.09, “Public Safety”, of the State Specifications.

L. The Contractor shall coordinate with City of San Jose authorities and receive their approval if temporary lane closures on Jackson Avenue, Capitol Expressway, Story Road, Murtha Drive and Moss Point Drive are needed for the Contractor's operation. Contractor shall also coordinate with Santa Clara County Roads and Airports authorities and receive their approval if temporary lane closures on Capitol Expressway are needed for the Contractor’s operation.

M. Temporary lane closures shall consist of closing traffic lanes in accordance with the approved traffic control plan, the provisions of Section 12, “Construction Area Traffic Control Devices”, of the State Specifications, and as specified herein. Temporary lane closures shall be removed when the Contractor is no longer occupying the lane.

N. Contractor is not relieved from the responsibility to provide such additional devices or take such measures as may be necessary to comply with the provisions of Section 7-1.09, “Public Safety”, of the State Specifications.

O. Temporary traffic stripe (one coat) and pavement marking (one coat) shall be painted conforming to Section 84, “Traffic Stripes and Pavement Markings”, of the State Specifications and as directed by the Engineer.

P. Temporary pavement marker shall conform to Section 85, “Pavement Markers”, of the State Specifications.

Q. Traffic stripes and pavement markings, where in conflict with new striping and/or shown on the plans to be removed, shall be removed by grinding off said traffic markings.

R. Existing pavement markers, when no longer required for traffic lane delineation as directed by the Engineer, shall be removed and disposed of.

S. Removal of existing asphalt pavement, curb, gutter, sidewalk, barrier and other surface improvements required to complete the traffic staging construction shall conform to Article 23.03.01 "Concrete Removal" of these Specifications.

T. During traffic striping operations, traffic shall be controlled with lane closures, as specified herein.

U. Contractor shall replace traffic striping in kind. Contractor shall be responsible for recording pavement striping types and width of existing roadways prior to beginning construction.

27.01.02 Materials

A. Traffic control devices shall be in accordance with Section 12-3, "Traffic Handling Equipment and Devices", of the State Specifications except as modified herein. If any component in the traffic control system is displaced, or ceases to operate or function as specified, from any cause, during the progress of the work, the Contractor shall immediately repair said component to its original condition or replace said component and shall restore the component to its original location.

B. Temporary fencing shall conform to Article 28.04, "Temporary Fence," of these Specifications.

C. Portable Delineatiors

1. Portable delineators shall conform to the provisions of Section 12-3.04, "Portable Delineators", of the State Specification except with the following modification; a minimum of two (2) reflective bands, each not less than 3 inches wide, shall be mounted at least 1½ inches apart and at a height on the post so that one (1) reflective band will be between 2½ feet and 3 feet above the roadway surface.

2. Traffic cones shall conform to the provisions of Section 12-3.10, "Traffic Cones", of the State Specifications, amended as described herein.

3. Traffic cones shall be fluorescent and of a good commercial quality, flexible material suitable for the purpose intended. The outer portion above the base of the cone shall be translucent and be of a highly pigmented fluorescent orange polyvinyl compound. The overall height of the cone shall be at least 28 inches and the bottom inside diameter shall be not less than 10½ inches. The base shall be of sufficient weight and size or shall be anchored in a manner such that the traffic cone will remain in an upright position.

4. During the hours of darkness, as defined in Division 1, Section 280 of the Vehicle Code, traffic cones shall be illuminated conforming to the provisions in Section 12-3.11, Illuminated Traffic Cones, of the State Specifications, or, at the option of the Contractor, shall be traffic cones affixed or covered with a minimum 13-inch flexible reflective cone sleeve, placed a maximum of 3 inches from the top of the cone. The sleeves shall be silver white and shall be fabricated from sheeting that have not less than the following dry reflectance expressed in units of candlepower per foot candle per square foot. The reflectance values shall be determined by California Test 642. The wet reflectance values shall not be less than 90 percent of the dry values when tested in accordance with Federal Highway Administration Specification FP-79, Section 7.8.01 (c).

Divergence Angle, degree	**Incidence Angle, degree**	**Dry Reflectance**
0.2	-4	250
0.2	30	95
0.5	-4	95
0.5	30	65

5. Traffic cones to be in place during daylight hours shall not be affixed or covered with reflectorized cone sleeves.

D. Construction Area Signs

1. Construction area signs shall conform to Section 12-3.06, "Construction Area Signs", of the State Specifications. These signs shall be furnished, installed, maintained and removed when no longer required as shown on the Drawings, in accordance with the provisions

in Section 12, "Construction Area Traffic Control Devices", of the State Specifications and as indicated in the CalTrans Traffic Manual. The base material of construction area signs shall not be plywood. All signs and other warning devices provided by the Contractor shall become the property of the Contractor after completion of the Contract.

2. During the hours of darkness, as defined in Division 1, Section 280 of the Vehicle Code, portable signs shown on the Drawings to be illuminated shall be, at the option of the Contractor, either illuminated signs in conformance with the provisions in Section 12-3.06B, "Portable Signs", of the State Specifications, or Reflexite vinyl microprism reflective sheeting signs, or 3M high intensity reflectorized sheeting on aluminum substrate signs or Seibulite Brand Ultralite Grade Series encapsulated lens retroreflective sheeting signs, or equal.

3. If any component in the traffic control system for lane closure is displaced, or ceases to operate or function as specified, from any cause, during the progress of the work, the Contractor shall immediately repair said component to its original condition or replace said component and shall restore the component to its original location.

E. Barricades

1. Temporary railing (Type K) shall conform to Section 12, "Construction Area Traffic Control Devices", of the State Specifications. A Type P marker panel is not required while the temporary crash cushion is placed in front of the first unit of rail (Type K) facing traffic. If temporary railing does not have a minimum of 2 feet to move upon impact, the barrier must be anchored to the pavement section as shown on the Drawings or approved by the Engineer.

2. Type III barricades shall comply with Section 12, "Construction Area Traffic Control Devices", of the State Specifications. Each barricade unit shall have a self-contained flashing light unit installed at the top of one of the vertical posts in a manner that does not cover any portion of the reflectorized surface of the barricade. A Type N marker shall be installed on each Type III barricade.

3. Temporary crash cushion modules in groupings or arrays shall be installed and maintained at each location shown on the approved

traffic control plan, specified in the special provisions or directed by the Engineer. The grouping or array of sand filled temporary crash cushion shall be in accordance with the details shown on the Caltrans Standard Plan T2 and these Specifications.

F. Channelizers shall be the surface-mounted type and shall conform to the provisions in Section 12, Construction Area Traffic Control Devices, of the State Specifications. Channelizer posts shall be orange in color.

G. Traffic Stripes and Pavement Markings

1. Permanent traffic stripes and painted pavement markings shall be installed as specified in these Specifications and as directed by the Engineer.

2. Pavement markings shall conform to the requirements of Section 84, Traffic Stripes and Pavement Markings, of the State Specifications.

3. If any component in the traffic control system for lane closure is displaced, or ceases to operate or function as specified, from any cause, during the progress of the work, the Contractor shall immediately repair said component to its original condition or replace said component and shall restore the component to its original location.

27.01.03 Placement

A. No stockpiling of materials or parking of equipment will be allowed on streets and sidewalks that are open or accessible to the public.

B. Large equipment or construction trucks shall access the site in compliance with the City of San Jose truck route ordinances.

C. All construction signs shall be placed in the field and shall be visible to drivers and not covered or blocked by trees or other fixed objects.

D. Contractor shall verify any sprinkler system conflicts before installing construction area signs in planting strip. Contractor shall replace landscaping upon removal of construction area signs.

E. Each temporary railing unit (Type K) to be placed within 20 feet of the traffic lane shall have reflectors installed on top of the rail as directed by the Engineer.

F. Temporary crush cushion modules shall be placed on movable pallets or frames. The pallets or frames shall provide a full bearing base beneath the modules. The modules and supporting pallets or frames shall not be moved by sliding or skidding along the pavement.

G. Complete traffic stripes shall have clean, well-defined edges, shall be uniform, shall be straight on tangent alignment, and shall be true arc on curved alignment. The width of completed traffic stripes shall not deviate more than 1/4 –inch on tangent nor more than ½-inch on curves.

H. Access to adjacent properties shall be maintained per Article 15.06 "Access to Properties Owned by Others", of these Specifications.

I. Pedestrian access shall be maintained at all times in accordance with Article 16.01 "Safety", of these Specifications.

27.01.04 Testing

The Contractor shall accompany the Engineer to inspect the area, which will be affected by project construction, during the hours of darkness, to determine the adequacy of the traffic control plans before approving commencement of any construction work. The Contractor shall correct or add any traffic control devices deemed required by the Engineer.

27.01.05 Submittals

The Contractor shall submit to the Engineer the Contractor's Traffic Control Plan(s), approved by the City of San Jose and/or Santa Clara County Roads and Airports for their respective rights-of-way, at least ten (10) days prior to any work within the public right-of-way, which will affect traffic. No work will be allowed prior to approval of the Contractor's Traffic Control Plan(s).

27.01.06 Measurement

Traffic control shall not be measured.

27.01.07 Payment

Full compensation for furnishing all labor, materials, tools, equipment and incidentals necessary to provide Traffic Control on Jackson Avenue, Capitol Expressway, Story Road, Murtha Drive, and Moss Point Drive, as shown on the Drawings, as specified in these Specifications, and as directed by the Engineer, including:

- preparation of, and approval by the City of San Jose and Santa Clara County Roads and Airports, of the Contractor's traffic control plan(s) showing the maintenance traffic and pedestrian access within the project limits throughout all stages of construction, per this Article, per General Provisions Article 6.32 "Traffic Control" and per Special Provisions Article 17.06 "Traffic Control" of these Specifications.
- remove and replace traffic control markings and systems throughout the construction stages;
- remove and replace fencing, railing, Type K railing, barricade, and crash cushions throughout the construction stages;
- remove and replace channelizers, pavement striping, pavement markings, pavement markers, and construction area signs throughout the construction stages including for bus stops;
- providing crossing guards on Jackson Avenue, Capitol Expressway, Story Road, Murtha Drive and Moss Point Drive as necessary throughout the construction stages;
- Traffic control at Penrod Place during the installation of the sanitary sewer and the Penrod Place PVC Storm Structure;
- all other miscellaneous work necessary throughout the construction stages for the project to complete the traffic control as required to complete all items of work,

shall be included in the lump sum price bid for various locations for TRAFFIC CONTROL, Bid Item Nos. 30 (Jackson Ave.) and 31 (Capitol Expwy.), and Bid Additive Item Nos. 97 (Story Rd.), 98 (Murtha Dr.), 133 (Murtha Dr.), and 134 (Moss Point Dr.), if/when included in the awarded project by the District.

Full compensation for furnishing all labor, materials, tools, equipment and incidentals, and for doing all work required to provide Traffic Control at Penrod Place for the installation of the sanitary sewer and the Penrod Place PVC Storm Drain Structure, during all stages of construction as shown on the Drawings, as specified in these Specifications, and as directed by the Engineer, shall be included in the lump sum price bid for the PENROD PLACE PVC STORM STRUCTURE, Bid Item No. 27, and no separate payment will be made therefore.

Full compensation for furnishing all labor, materials, tools, equipment and incidentals, and for doing all work required for providing all other Traffic Control, not specifically mentioned above, necessary to maintain vehicular and pedestrian activity throughout the project areas during all stages of construction as shown on the Drawings, as specified in these Specifications, and as directed by the Engineer, shall be included in the lump sum or unit price bid for the items of work which require Traffic Control, and no separate payment will be made therefore.

28 FENCING AND GATES

28.01 NOT USED

28.02 CL–3.5 and CL-6 Chain Link Fence and Galvanized Gap Fence – Bid Item Nos. 32, 33, 34A, 34B, 69, 70A, 70B, 99, 100, 101A, 101B, 135, 136, 137A, 137B

28.02.01 Scope of Work

Type CL-3.5 fence, and Type CL-6 fence shall consist of all labor, materials, and equipment necessary to install 42-inch high Type CL fence, 6-foot Type CL fence, and 6-foot Type CL gap fence, in accordance with the details shown on the Drawings, as specified herein, and as directed by the Engineer. Contractor shall install fence at completion of channel improvements, as various segments of the construction are completed, or as directed by Engineer.

The Contractor shall install the Type CL-6 Galvanized Gap Fence, or use temporary fencing if approved by the Engineer, the same day that the demolition of the existing fence is performed, with the goal of providing security to private properties at all times.

This scope include removals of existing fencing and gates, which is described in Article 22.03.05 “Fence and Gate Removal and/or Salvage” of these Specifications.

28.02.02 Materials

All fencing shall be in accordance with Section 80, “Fences”, of the State Specifications.

Where shown on the Drawings, chain link fencing and gates, posts, bars, tension bars, and appurtenances shall be black vinyl coated thermally fused to conform to ASTM F 668, Class 2B.

28.02.03 Placement

Maximum fence post spacing shall be 8’ on center.

Type CL-6 fence posts set in ground shall be embedded in Class “3” concrete poured into the hole without backfill in accordance with Article 29.01, “Structural Concrete” of these Specifications.

Concrete footings for Type CL-6 Galvanized Gap Fence are not required.

Separate posts set on top of floodwalls or structures shall be flattened on end and, shall be embedded in the post pocket with non-shrink grout per Article 29.07 "Non-Shrink Grout" of these Specifications, sleeves will not be required.

The Contractor's attention is directed to Article 6.14 "Preservation of Property" of these Specifications.

28.02.04 Testing

No special requirements.

28.02.05 Submittals

No special requirements.

28.02.06 Measurement

Quantities of chain link fence to be paid for will be determined by the linear foot from actual field measurement of new Type CL-6 fence being installed. Such measurements to be made parallel to the ground slope along the line of the completed fence, deducting the widths of the openings.

28.02.07 Payment

Full compensation for furnishing all labor, materials, tools, equipment and incidentals and for doing all work required for installing chain link fence complete in place, including embedding in post pocket, as shown on the Drawings, as specified in these Specifications, and as directed by the Engineer, shall be included in the unit price bid per linear foot for TYPE CL-3.5 BLACK VINYL COATED FENCE, Bid Item No. 32 and Bid Additive Item Nos. 69, 99, and 135, if/when included in the awarded project by the District.

Full compensation for furnishing all labor, materials, tools, equipment and incidentals and for doing all work required for installing chain link fence complete in place, including concrete footing, as shown on the Drawings, as specified in these Specifications, and as directed by the Engineer, shall be included in the unit price bid per linear foot for TYPE CL-6 BLACK VINYL COATED FENCE, Bid Item No. 33 and Bid Additive Item Nos. 100 and 136 if/when included in the awarded project by the District.

Full compensation for furnishing all labor, materials, tools, equipment and incidentals and for doing all work required for installing chain link fence complete in place, including concrete footing, as shown on the Drawings, as specified in these Specifications, and as directed by the Engineer, shall be included in the unit

price bid per linear foot for TYPE CL-6 GALVANIZED FENCE, Bid Item No. 34A, and Bid Additive Item Nos. 70A, 101A, and 137A if/when included in the awarded project by the District.

Full compensation for furnishing all labor, materials, tools, equipment and incidentals and for doing all work required for installing chain link fence complete in place, including embedding posts directly into the ground, as shown on the Drawings, as specified in these Specifications, and as directed by the Engineer, shall be included in the unit price bid per linear foot for TYPE CL-6 GALVANIZED GAP FENCE, Bid Item No. 34A, and Bid Additive Item Nos. 70A, 101A, and 137A if/when included in the awarded project by the District.

28.03 Wood Privacy Fence – Bid Item No. 35

28.03.01 Scope of Work

Wood fence shall consist of furnishing all labor, tools, equipment to install wood fencing along the backyard of the Soares home located on Shortridge Avenue, as shown on the Drawings, as specified in these Specifications, and as directed by the Engineer.

The Contractor shall install the new wood fence or use temporary fencing if approved by the Engineer, the same day that demolition of the existing fence is performed with the goal of providing security to private properties at all times.

This scope includes removal of existing fencing, which is described in Article 22.03.05 “Fence and Gate Removal and/or Salvage” of these Specifications.

28.03.02 Materials

Wooden posts shall be nominal dimensions of 4” x 4” and 8-foot in length. Material for posts shall be cedar or redwood.

Cross rails shall be a minimum nominal dimension of 2”x4” and shall be cedar or redwood.

Fence boards shall be nominal dimension of 1”x6”x6’. Material for fence boards shall be all cedar or all redwood and not mixed unless approved. Fence boards shall be dog-eared type.

28.03.03 Placement

Wood fence shall be installed in the locations shown on the Drawings.

Posts shall be spaced 8-foot center to center. Posts shall be set in a 12-inch diameter, 27" deep hole. 3-inches of gravel shall be placed at the bottom of the hole. Post holes shall be filled with concrete after installation of the post.

Three (3) cross railings shall be installed between each adjacent fence posts. Cross rails shall be located 8" below the top of the fence, 8" above the ground, and one in the middle. Cross rails shall be attached to the posts using 16d galvanized nails and/or metal hangers.

Fence boards shall be attached to the cross rails using 2-8d galvanized nails at each cross rail. A 1/8" gap shall be provided between each fence board.
Wooden fence shall be connected to existing fence.

Separate posts set on top of floodwalls or structures shall be flattened on end and, shall be embedded in the post pocket with non-shrink grout per Article 29.07 "Non-Shrink Grout" of these Specifications, sleeves will not be required.

The Contractor's attention is directed to Article 6.14 "Preservation of Property" of these Specifications.

28.03.04 Measurement

Quantities of wood fence to be paid for will be determined by the linear foot from actual field measurement of new, permanent fence being installed. Such measurements to be made parallel to the ground slope along the line of the completed fence, deducting the widths of openings.

28.03.05 Payment

Full compensation for furnishing all labor, materials, tools, equipment and incidentals and for doing all work required for installing wood privacy fence complete in place, as shown on the Drawings, as specified in these Specifications, and as directed by the Engineer, shall be included in the unit price bid per linear foot for WOOD PRIVACY FENCE, Bid Item No. 35.

28.04 Temporary Fence

28.04.01 Scope of Work

Temporary fence shall consist of furnishing all labor, tools, equipment to install and remove temporary Type CL-6 fence around construction areas and orange construction fences around existing items that are to be protected in place, as necessary during construction, as specified in these Specifications, and as directed by the Engineer.

This scope does not include removal of existing fencing and gates, which is described in Article 22.03.05 “Fence and Gate Removal and/or Salvage” of these Specifications.

28.04.02 Materials

Temporary Type CL-6 fence shall conform to Section 80, “Fences”, of the State Specifications and State Standard Plan Detail A85, except as modified herein.

Galvanizing and painting of steel items will not be required. Concrete footings for metal posts will not be required.

Orange Construction fence shall be 4 feet high, orange with an approximate mesh opening of 1 by 4 inches and made of high-density polyethylene resin, with a temperature range of -40 to 200 degrees Fahrenheit. Posts will be metal T-posts 6 feet in length.

28.04.03 Placement

Temporary Type CL-6 fence shall be installed before construction and removed after the item of work protected by the fencing is completed and the Engineer approves removal of fencing.

The Contractor’s attention is directed to Article 6.14 “Preservation of Property” of these Specifications.

28.04.04 Measurement

Temporary fencing shall not be measured.

28.04.05 Payment

Full compensation for furnishing all labor, materials, tools, equipment and incidentals, and for doing all work to provide, install, maintain, and remove temporary Type CL-6 fence and orange construction fence complete, in place as necessary during construction, as required in the field, as specified in these Specifications, and as directed by the Engineer shall be included in other items of work and no separate payment shall be made therefore.

28.05 NOT USED

28.06 Single and Double Swing Gates – Bid Item Nos. 36, 37, 102, 103, 138, 139

28.06.01 Scope of Work

Fourteen-foot wide double swing Type CL-6 gates and four-foot wide single swing Type CL-3.5 and Type CL-6 gates shall consist of all labor and materials necessary to install the 14-foot wide double swing Type CL-6 gates and the 4-foot wide single swing Type CL-3.5 and Type CL-6 gates as shown on the Drawings, as specified herein, and as directed by the Engineer.

This scope does not include removal of existing fencing and gates, which is described in Article 22.03.05 "Fence and Gate Removal and/or Salvage" of these Specifications.

28.06.02 Materials

All gates, posts, bars, tension bars and appurtenances shall be black vinyl coated.

Each gate section shall be able to swing freely both ways with a lock mechanism. Each gate shall be installed with adequate attachments, fittings, and fasteners as specified in Section 80, "Fences" of the State Specifications.

The locking mechanism shall consist of 3/8-inch steel bars shop fabricated and galvanized to each gate frame as shown on the Drawings. The 3/8-inch steel bars shall be of low carbon alloy steel in conformance with ASTM A-36 and the requirements of Section 75-1.05, "Galvanizing", of the State Specifications.

Existing gates removed per Article 22.03.05, "Fence and Gate Removal", which conform to the requirements above, shall be reuse.

28.06.03 Placement

The Type CL-6 fence posts set in ground shall be embedded in Class 3 concrete poured into the hole without backfill in accordance with Article 29.01, "Structural Concrete," of these Specifications.

Type CL-3.5 and Type CL-6 post set on top of floodwalls or other structures shall be flattened on end and shall be embedded in the post pocket with non-shrink grout per Article 29.07 "Non-Shrink Grout" of these Specifications. Sleeves will not be required.

Separate posts set on top of floodwalls or structures shall be flattened on end and, shall be embedded in the post pocket with non-shrink grout per Article 29.07

"Non-Shrink Grout" of these Specifications, sleeves will not be required.

The Contractor's attention is directed to Article 6.14 "Preservation of Property" of these Specifications.

28.06.04 Testing

No special requirements.

28.06.05 Submittals

No special requirements.

28.06.06 Measurement

Measurement of the Type CL-3.5 and Type CL-6 gates for payment purposes shall be determined from actual count in place. Each Double Swing Gate, including both gate units and all necessary fittings and hardware shall count as one gate.

28.06.07 Payment

Full compensation for furnishing all labor, materials, tools, equipment and incidentals, and for doing all work required for single and double swing chain link fence and gates complete in place, as shown on the Drawings, as specified in these Specifications, and as directed by the Engineer shall be included in the unit price bid per each for TYPE CL-3.5 AND TYPE CL-6 SINGLE SWING GATE, Bid Item No. 36 and Bid Additive Item Nos. 102 and 138 if/when included in the awarded project by the District.

Full compensation for furnishing all labor, materials, tools, equipment and incidentals, and for doing all work required for single and double swing chain link fence and gates complete in place, as shown on the Drawings, as specified in these Specifications, and as directed by the Engineer shall be included in the unit price bid per each for TYPE CL-3.5 AND TYPE CL-6 DOUBLE SWING GATE, Bid Item No. 37 and Bid Additive Item Nos. 103 and 139 if/when included in the awarded project by the District.

29 CONCRETE

29.01 Structural Concrete

29.01.01 Scope of Work

Structural concrete shall consist of all work and materials necessary to construct all reinforced concrete structures as shown on the Drawings, as specified by these Specifications, and as directed by the Engineer, which includes furnishing and placing concrete forms (including stripping the forms), reinforcing steel and concrete.

29.01.02 Materials

Structural concrete shall be Class I Portland concrete (with not less than 675 pounds of Portland cement per cubic yard) conforming to the provisions of Section 51, "Concrete Structures"; Section 52, "Reinforcement"; and Section 90, "Portland Cement Concrete", of the State Specifications and these Specifications. Attentions are directed to the "Geotechnical Investigation Report, Lower Silver Creek Reaches 4-6A" by Parikh Consultants, Inc. dated May 2010" (Parikh May 2010 Report). Where corrosive soil due to low levels of resistivity are detected in the native material, cement shall be Type II Modified conforming to the provisions of Section 90 of the State Specifications, and structural concrete mix designs shall not contain less than 752 lbs. of cement per cubic yard.

The 28-day compressive strength of the Class I concrete shall be greater than or equal to 4,000 psi for all structures. Concrete with lesser strength will be rejected. Rejected concrete work shall be completely removed and disposed of off the right of way at the Contractor's expense. The structure shall then be reconstructed in accordance with the Drawings and these Specifications.

An air-entering agent may be used in accordance with the provisions of Section 90-4, "Admixtures", of the State Specifications. The nominal limit of total air content shall be 4 percent.

The amount of water used in the concrete shall not exceed the amount necessary to produce a maximum slump of 3 inches for concrete sections thicker than 12 inches, and 4 inches for sections 12 inches thick or less. The amount of slump shall be consistently maintained within the limits of plus or minus ½ inch for each test. The maximum water-cement ration for Class I concrete shall be 0.46 by weight.

Drill and bond dowels shall conform to Section 83-2.02D (1), "General", of the State Specifications and these Specifications.

Reinforcement shall be in accordance with the requirements of Section 52, "Reinforcement", of the State Specifications and these Specifications. Galvanize reinforcing as indicated on the drawings per requirements of ASTM A767, "Standard Specification for the Zinc-Coated (Galvanized) Steel Bars for Concrete Reinforcement".

Mechanical couplers for reinforcement are permitted and shall be the sleeve threaded type conforming to the requirements of Section 52-1.08B(1), "Mechanical Splices", of the State Specifications and these Specifications. Galvanize couplers as indicated on the drawings per requirements of ASTM A767, "Standard Specification for the Zinc-Coated (Galvanized) Steel Bars for Concrete Reinforcement".

Concrete forms shall be plywood, Exterior Grade, Douglas Fir, Class I, not less than ¾ inch thick. Smooth metal forms may be used in lieu of plywood.

29.01.03 Placement

Curing of concrete shall conform to the provisions of Section 90-7, "Curing Concrete", of the State Specifications. The curing compound shall be non-pigmented curing compound with fugitive dye except when specified otherwise in these Specifications. The curing compound shall not be petroleum hydrocarbon resin base or chlorinated rubber base.

The Contractor shall have the option to place concrete by pumping. Pumping concrete through aluminum or magnesium pipes will not be permitted.

Transverse reinforcement shall be placed at right angles to channel control line unless otherwise shown on the Drawings. In curved reaches, transverse bars shall be spaced as shown on the applicable section of the Drawings with the spacing to be applied at the outside of the curve unless noted otherwise on the Drawings.

Before placing fresh concrete, the entire surface of each construction joint shall be thoroughly cleaned of surface laitance, curing compound or other material foreign to the concrete and clean coarse aggregate shall be exposed. Surfaces of fresh concrete in place no more than 8 hours may be cleaned with air and water jets, but concrete surfaces in place for more than 8 hours must be cleaned by abrasive blast methods.

The concrete in each integral part of the structure shall be placed continuously and the Contractor will not be permitted to commence work on any part unless facilities are on hand and the forces are sufficient to complete the part without interruption in the placing and finishing of the concrete.

Cold joints or joints in the concrete due to stopping work shall be avoided as far as possible but in the event of breakdown of Contractor's operation; the Contractor shall complete the consolidation of the concrete to a reasonable uniform stable slope while the concrete is still plastic. Before concrete placing is resumed, the surfaces of cold joints shall be cleaned as described above and brushed with fresh mortar before concrete placing begins. Cold joint areas in concrete shall be tested by striking the surfaces with a hammer to detect possible voids or honeycomb areas. The Contractor shall remove all honeycomb or crummy concrete and shall repair such areas in accordance with these Specifications.

A Class 1 surface finish in accordance with Section 51-1.18B, "Class 1 Surface Finish", of the State Specifications shall be provided on all exposed surfaces of formed concrete structures not specified to have special architectural treatment.

All formed surfaces which are to be buried shall be provided with an "ordinary" surface finish as specified in Section 51-1.18A, "Ordinary Surface Finish", of the State Specifications.

Channel bottoms shall be provided with a broom finish as specified in Section 72-4.04, "Construction" of the State Specifications.

Concrete forms installation and removal are to comply with provisions of ACI 318 and 347.

29.01.04 Testing

The testing for compressive strength of concrete shall conform to the provisions of Section 90-9, Compressive Strength, of the State Specifications. Concrete slump tests shall be completed in accordance with ASTM Test Method C-143, as directed by the Engineer.

29.01.05 Submittals

Mix designs for concrete shall be prepared by the Contractor. The mix shall be reviewed and approved by the Engineer prior to ordering materials or mixing concrete.

The Contractor shall submit shop drawings of reinforcing steel on this project. No fabrication of reinforcing steel will be allowed until shop drawings have been reviewed per Article 19.01.02, Shop Drawings, Product Data, and Samples of these Specifications. Shop drawings used in the field shall be reviewed and approved copies.

29.01.06 Measurements

Measurement of structural concrete shall be specified in the item of work, which requires structural concrete.

29.01.07 Payment

Full compensation for furnishing all labor, materials, tools, equipment and incidentals, and for doing all work to supply Structural Concrete per this Article to construct reinforced concrete structures as shown on the Drawings, as specified by these Specifications, and as directed by the Engineer shall be included in the lump sum or unit price bid for the item of work which requires structural concrete, and no additional payment will be made therefore.

29.02 Lean Concrete

29.02.01 Scope of Work

Lean concrete shall be used as required on the Drawings and in these Specifications.

Materials

Lean Portland cement concrete (not less than 290 lbs of Portland cement per cubic yard) shall conform to Section 90, “Portland Cement Concrete”, of the State Specifications.

29.02.02 Placement

Placement of lean concrete shall conform to Section 90, “Portland Cement Concrete”, of the State Specifications.

29.02.03 Testing

Testing for compressive strength of lean concrete will not be required.

29.02.04 Submittals

No special requirements.

29.02.05 Measurement

Measurement of lean concrete shall be specified in the item of work, which requires lean concrete.

29.02.06 Payment

Full compensation for furnishing all labor, materials, tools, equipment and incidentals, and for doing all work to supply Lean Concrete per this Article to construct lean concrete structures as shown on the Drawings, as specified by these Specifications, and as directed by the Engineer shall be included in the lump sum or unit price bid for the item of work which requires lean concrete, and no additional payment will be made therefore.

29.03 Air-Blown Mortar - Shotcrete

29.03.01 Scope of Work

Air-blown mortar consists of all work, materials, and equipment necessary to furnish and place air blown mortar for the concrete structures as shown in the Drawings, as specified in these Specifications, and as directed by the Engineer.

29.03.02 Materials

Air blown mortar shall conform to the provisions in Section 53, “Shotcrete”, of the State Specifications and these specifications.

Attention is directed to the “Geotechnical Investigations Report, Lower Silver Creek, Reach 4-6A” by Parikh Consultants Inc., Draft dated March 19, 2010. Where corrosive soil due to low levels of resistivity in the native soil material are detected, cement shall be Type II Modified conforming to the provisions of Section 90, “Portland Cement Concrete” of the State Specifications and concrete mix designs for air blown mortar shall not contain less than 752 lbs per cubic yard of concrete.

29.03.03 Placement

Air blown mortar operations shall completely encase all reinforcement and other obstructions shown on the Drawings. Exceptional care shall be taken to properly encase the reinforcement and other obstructions with air blown mortar.

Except for finish coats, air blown mortar shall be applied by the wet-mix process only.

Finish coats, applied by the dry-mix process, may be used only when approved by the Engineer.

Air blown mortar shall have a minimum compressive strength of 4000 pounds per square inch at 28 days or as shown on the Drawings, whichever is greater. No air blown mortar work shall be performed prior to verification by the Engineer of the required compressive strength.

Splicing of reinforcing bars No. 7 or larger in air blown mortar shall be by butt splicing only.

An air blowpipe shall be used during air blown mortar placement to remove rebound, overspray and other debris from the areas to receive air blown mortar.

Construction joints shall be tapered, and shall conform to the provisions in Sections 51-1.13, “Bonding,” of the State Specifications.

All overspray and rebound shall be removed prior to final set and before placement of air blown mortar on adjacent surfaces.

Rebound or any other material which has already exited the nozzle shall not be reused.

Air blown mortar shall be cured in accordance with the provisions of Section 90-7.03, “Curing Structures,” of the State Specifications.

When a finish coat is to be used, all loose, uneven or excess material, glaze, and rebound shall be removed by brooming, scraping, or other means and the surface left scarified. Any surface deposits which take a final set shall be removed by abrasive blasting. Prior to placing the finish coat, the receiving surface shall be washed down with an air-water blast.

Air blown mortar extending into the space shown on the Drawings for cast-in-place concrete shall be removed.

The surface finish of the air blown mortar shall conform to the provisions for Class “1” surface finish of Section 51-1.18, "Surface Finishes," of the State Specifications.

29.03.04 Testing/Submittals

Prior to performing air blown mortar work, the Contractor shall construct at least 2 preconstruction test panels for each mixture being considered unless otherwise specified.

The nozzle operator shall have a minimum of 3000 hours experience as an operator on projects with a similar application.

At least 10 working days prior to constructing any test panels, the Contractor shall submit to the Engineer for approval, a Quality Control Plan (QCP) for the proposed method of placement. The plan shall include the following:

1. The number and qualifications of nozzle operators available to place air blown mortar, the number of nozzle operators on-site at any time during the air blown mortar placement, description of their work schedule, and the procedures for avoiding fatigue of any nozzle operator.

2. The proposed method of placing air blown mortar, including, but not limited to, application rates, details of any proposed construction joints and their locations, and methods for achieving the required thickness and surface finish.

3. The procedure for curing air blown mortar surfaces.

4. The description of a debris containment system, to be used during the cleaning of bar reinforcing steel and concrete and placing of air blown mortar, as required to provide for public safety.

The Engineer shall have 10 working days to review and approve the QCP submittal after a complete plan has been received. No construction of test panels shall be performed until the QCP is approved by the Engineer.

Preconstruction test panels shall be constructed by the nozzle operator and application crew scheduled to do the work, using equipment, materials, mixing proportions, ambient temperatures and procedures proposed for the work. The preconstruction test panels shall conform to the following:

One test panel, of the size determined by the Contractor, shall be unreinforced and shall have 3 cores taken from it and tested for compressive strength. The compressive strength shall be the average strength of the 3 cores, except that, if any core should show evidence of improper coring, the core shall be discarded and the compressive strength shall be the average strength of the remaining cores. The test panel shall be identified and submitted to the Engineer with the test results including a description of the mixture, proportions, and ambient temperature.

One test panel shall have the same (1) thickness, (2) bar size and amount of bar reinforcement or other obstructions and (3) positioning of bar reinforcement or

obstructions as the most heavily reinforced section of air blown mortar to be placed. The test panel shall be square with the length of the sides equal to at least 3 times the thickness of the most heavily reinforced section of air blown mortar to be placed, but not less than 30 inches. After a minimum 7 days of cure, the test panel shall be broken by the Contractor, in the presence of the Engineer, into pieces no larger than 10 inches in greatest dimension. The surfaces of the broken pieces shall be dense and free of laminations and sand pockets, and shall verify that the bar reinforcement or other obstructions are completely encased.

Both test panels shall be cured under conditions similar to the actual work.

At the option of the Contractor, cores to be used for determining the compressive strength may be taken from the reinforced test panel described above in lieu of making a separate unreinforced test panel as described above. The compressive strength shall be the average strength of the 3 cores, except that, if any core should show evidence of improper coring or contains bar reinforcement or other obstructions, the core shall be discarded and the compressive strength shall be the average strength of the remaining cores. If cores are taken from the reinforced test panel, the panel shall not be broken into pieces, as described above, until it has cured for a minimum of 14 days.

The Contractor shall be responsible for obtaining and testing all required preconstruction and production test cores. All coring and testing shall be at the Contractor's expense and performed in the presence of the Engineer, unless otherwise directed. The Engineer shall be notified a minimum of 24 hours prior to the Contractor performing any coring or testing operations.

All cores shall be obtained and tested for compressive strength in accordance with the specifications of ASTM Designation: C 42. Cores used for determining compressive strength shall not contain any bar reinforcement or other obstructions. The testing shall be performed at an independent testing facility approved by the Engineer. A copy of the test results shall be furnished to the Engineer within 5 days following completion of testing.

All test panels shall become the property of the Contractor and shall be disposed of as provided in Section 7-1.13, “Disposal of Material Outside the Highway Right of Way”, of the State Specifications.

At least 3 production test cores shall be taken from each 300 square feet or portion thereof of air blown mortar placed each day. The cores shall be 3-inches in diameter. The location where cores are to be taken will be designated by the Engineer. Test cores shall be identified by the Contractor and a description of the core location and mixture, including proportions, shall be submitted to the Engineer with the test cores, immediately after coring. Cored holes shall be filled

with mortar in accordance with the requirements of Section 51-1.135, “Mortar,” of the State Specifications.

Upon receipt of the cores, the Engineer will perform a visual examination to determine acceptance, as described below. Within 48 hours after receipt, the Engineer will return the cores to the Contractor for compressive strength testing.

The compressive strength test shall be performed using the production test cores described above. The compressive strength shall be the average strength of the 3 cores, except that, if any core should show evidence of improper coring, the core shall be discarded and the compressive strength shall be the average strength of the remaining cores.

The basis of acceptance for production test cores shall be (1) that the core is dense and free of laminations and sand pockets, and shows that the reinforcement or other obstructions are completely encased and (2) the same as specified for test cylinders in the fourth and fifth paragraphs of Section 90-9.01, "General," of the State Specifications.

If any production test core shows signs of defective air blown mortar as described in (1) above, the air blown mortar represented by such test core will be rejected, unless the Contractor, at the Contractor’s expense, obtains and submits evidence acceptable to the Engineer that the strength and quality of the air blown mortar placed in the work are acceptable.

29.03.05 Measurement

Measurement of air-blown mortar shall be specified in the item of work requiring air-blown mortar.

29.03.06 Payment

Full compensation for furnishing all labor, materials, tools, equipment and incidentals and for doing all work required for air-blown mortar per this Article, as shown on the Drawings, as specified in these Specifications, and as directed by the Engineer shall be included in the lump sum or unit price bid for the item of work which requires air-blown mortar and no additional payment will be made therefore.

29.04 Joints, Water Stops and Sealants

29.04.01 Scope of Work

Expansion Joints, Waterstops and Sealing Joints shall consist of work and materials necessary to furnish and place these items in concrete as shown on the drawings and as specified in these Specifications.

29.04.02 Materials/Placement

Hardboard and expanded polystyrene shall conform to the provisions in Section 51-1.12, D "Sheet Packing, Performed Pads and Board Filters", of the State Specifications.

Furnishing and installation of waterstops shall conform to the requirements in Section 51-1.14, "Waterstops", of the State Specifications.

Furnishing and installation of neoprene strip shall conform to the requirements for strip water stops as provided in Section 51-1.145, "Strip Waterstops", of the State Specifications.

Expansion joints shall be provided at intermediate beams as called out on the drawings.

All joints shall be sealed in conformance with the details shown on the drawings and the provisions in Section 51, "Concrete Structures", of the State Specifications.

29.04.03 Testing

No special requirements.

29.04.04 Submittals

No special requirements.

29.04.05 Measurement

Expansion joints will not be measured.

29.04.06 Payment

Full compensation for furnishing all labor, materials, tools, equipment and incidentals and for doing all work required for Joints, water stops and sealants per this

Article as shown on the Drawings, as specified in these Specifications, and as directed by the Engineer shall be included in the lump sum or unit price bid for the item of work which requires joints, water stops and sealants, and no additional payment will be made therefore.

29.05 Formwork and Falsework

29.05.01 Scope of Work

Forms and Falsework shall consist of the structural design, work and materials necessary to support the placement of the concrete and furnish and place joints in the concrete as shown on the drawings and as specified in these Specifications.

29.05.02 Materials/Placement

Forms shall conform to the provisions in Section 51-1.05, “Forms” of the State Specifications.

Falsework shall conform to the provisions in Section 51-1.06, “Falsework” of the State Specifications.

29.05.03 Testing

No special requirement.

29.05.04 Submittals

The Contractor shall submit details and layout of the joints and the design and working drawings of falsework.

29.05.05 Measurements

Form and Falsework will not be measured.

29.05.06 Payment

Full compensation for furnishing all labor, materials, tools, equipment and incidentals and for doing all work required for Forms and Falsework per this Article, as shown on the Drawings, as specified in these Specifications, and as directed by the Engineer shall be included in the lump sum or unit price bid for the item of work which requires Forms and Falsework, and no additional payment will be made therefore.

29.06 Architectural Finish

29.06.01 Architectural Staining, Bid Item Nos. 38, 71, 104, 140

29.06.01.01 Scope of Work

This work shall consist of preparing and staining concrete surfaces where shown on the Drawings in conformance with the provisions in Section 59-6, "Painting Concrete," of the State Specifications and these special provisions.

29.06.01.02 Materials

Concrete stain shall be a water-based solution of metallic salts that penetrate and react with concrete to produce insoluble, abrasion-resistant color deposits. The stain shall contain dilute acid to etch concrete surfaces so that the staining ingredients can penetrate the concrete.

Concrete stain for Bridge and Ramp Wall surfaces shall be formulated and applied so that the final color of the stained concrete matches Color No. 5237- "San Diego Buff" by Davis Color

Concrete stain for flood and retaining wall surfaces shall be formulated and applied so that the final color of the stained concrete matches Color No. 61078 "Adobe" by Davis Color.

29.06.01.03 Test Panel

A test panel at least 4' x 4' shall be completed and approved at a location approved by the Engineer before beginning work on architectural texture and/or staining concrete. The test panel shall be constructed, finished, and stained with the materials, tools, equipment, personnel, and methods to be used in constructing, finishing, and staining the concrete surfaces. Additional test panels may be ordered by the Engineer until the specified finish, texture, and color are obtained.

The test panel approved by the Engineer shall be used as the standard of comparison in determining acceptability of architectural texture and staining for concrete surfaces.

The Contractor shall submit a copy of the stain manufacturer's recommendations and written application instructions to the Engineer not less than 7 days before applying concrete stain to test panels.

29.06.01.04 Placement/Application

New concrete surfaces to be stained shall be cured in conformance with the provisions in Section 90-7.03, "Curing Structures," of the state Specifications and these special provisions.
The Contractor shall seal joints between concrete surfaces to be stained and metal surfaces that are galvanized or painted with a polysulfide or polyurethane sealing compound conforming to the requirements in ASTM Designation: C 920, Type S, Grade NS, Class 25, use M. The color of the sealant shall match the color of the adjoining concrete surface stain color.

Immediately before commencing work, the Contractor shall test concrete surfaces to be stained for acceptance of stain in conformance with the manufacturer's recommendations. Areas that resist accepting stain shall be cleaned as approved by the Engineer.

The Contractor shall apply the concrete stain in conformance with the manufacturer's recommendations and these special provisions. The stain shall be applied uniformly, working to avoid excessive rundown. The stain shall be worked into the concrete surface in circular motions with a nylon-bristled brush. Drips, puddles, or other irregularities shall be worked into the concrete.

After the last coat of stain has dried, the Contractor shall rinse stained surfaces with water and wet scrub surfaces with a stiff bristled nylon brush until the rinse water runs clear.

The Contractor shall protect adjacent surfaces during concrete staining operations.

Prepared and stained concrete will be measured by the square foot.

29.06.01.05 Testing

No special requirements.

29.06.01.06 Submittals

Submit a copy of the stain manufacturer's recommendations and written application instructions for review and approval.

Submit test panel for review and approval.

29.06.01.07 Measurement

Concrete surface to be prepared and stained will be measured by the square foot. Measurement will be determined along the surface of the actual areas stained.

29.06.01.08 Payment

Full compensation for furnishing all labor, materials, tools, equipment and incidentals and for doing all work involved in preparing and applying both colors of stain to concrete surfaces, complete in place, including construction of test panels, as shown on the Drawings, as specified in these Specifications, and as directed by the Engineer shall be included in the unit price per square foot bid per square foot for "ARCHITECTURAL STAINING," Bid Item No. 38, and Bid Additive Item Nos. 71, 104 and 140, if/when included in the awarded project by the District.

29.06.02 Architectural Texturing

29.06.02.01 Scope of Work

Architectural texture shall consist of all work and materials necessary to furnish, and place textured concrete as shown on the drawings and as specified in these Specifications.

Textured concrete shall be in accordance with Article 29.01, "Structural Concrete," and/or Article 29.03, "Air-Blown Mortar-Shortcrete," of these Specifications, except as noted herein.

29.06.02.02 Materials

Form liners shall be manufactured from an elastomeric material or a semi-elastomeric polyurethane material by a manufacturer of commercially available concrete form liners. No substitution of other types of form liner material will be allowed. Form liners shall leave crisp, sharp definition of the architectural surface. Recurring textural configurations exhibited by repeating, recognizable shadow patterns shall be prevented by proper casting of form liner patterns. Textured concrete surfaces with such recurring textural configurations shall be reworked to remove such patterns as approved by the Engineer or the concrete shall be replaced.

Form liners shall have the following properties:

Description	ASTM Designation:	Range
Elastomeric Material		
Shore A Hardness	D 2240	20 to 65
Tensile Strength (Mpa)		
Semi-elastomeric Polyurethane		
Shore D Hardness	D 2240	55 to 65
Tensile Strength (Mpa)	D 2370	18 minimum

Cuts and tears in form liners shall be sealed and repaired in conformance with the manufacturer's recommendations. Form liners that are delaminated from the form shall not be used. Form liners with deformations to the manufactured surface caused by improper storage practices or any other reason shall not be used.

Adhesives shall be compatible with the form liner material and with the concrete. Adhesives shall be approved by the liner manufacturer. Adhesives shall not cause swelling of the liner material

Products and application procedures from form release agents shall be approved by the form liner manufacturer. Release agents shall not cause swelling of the liner material or delamination from the forms. Release agents shall not stain the concrete or react with the liner material.

29.06.02.03 Placement

Form liners shall be used for textured concrete surfaces and shall be installed in conformance with the manufacturer's recommendations, unless other methods of forming textured concrete surfaces are approved by the Engineer.

Form liners shall extend the full length of texturing with transverse joints at 8-foot minimum spacing. Small pieces of form liners shall not be used. Grooves shall be aligned straight and true. Grooves shall match at joints between form liners. Joints in the direction of grooves in grooved patterns shall be located only in the depressed portion of the textured concrete. Adjoining liners shall be butted together without distortion, open cracks or offsets at the joints. Joints between liners shall be cleaned before use to remove any mortar in the joint.

The release agent shall coat the liner with a thin film. Following application of form release agent, the liner surfaces shall be cleaned of excess amounts of agent using compressed air. Buildup of form release agent caused by the reuse of a liner shall be removed at least every 5 uses.

Form liners shall release without leaving particles or pieces of liner material on the concrete and without pulling or breaking concrete from the texture surface. The concrete surfaces exposed by removing form shall be protected from damage.

For Air-Blown Mortar-Shotcrete, the troweled or stamped surface texture shall match the texture as shown on the drawings and as specified in these Specifications.

The architectural texture shall be abrasive blasted with fine abrasive to remove the sheen without exposing coarse aggregate.

Concrete surfaces with architectural texture shall be cured only by the forms-in-place or water methods. Seal and curing compounds shall not be used.

29.06.02.04 Testing

Testing of concrete and air blown mortar with architectural texture shall be in accordance with Article 29.01, "Structural Concrete," of these Specifications.

A test panel at least 4-foot by 4-foot in size shall be successfully completed at a location approved by the Engineer before beginning work on architectural textures. The test panel shall be constructed and finished with the materials, tools, equipment, and methods to be used in construction of the architectural texture. If

ordered by the Engineer, additional test panels shall be constructed and finished until the specified finish, texture, and color are obtained, as determined by the Engineer.

The test panel approved by the Engineer shall be used as the standard of comparison in determining acceptability of architectural texture for concrete surfaces.

29.06.02.05 Submittals

Submit test panel for review and approval for both cast-in-place form liner finish or troweled or stamped finish for air-blown mortar-shotcrete.

29.06.02.06 Measurement

Architectural texture will not be measured.

29.06.02.07 Payment

Full compensation for furnishing all labor, materials, test panels, tools, equipment and incidentals and for doing all work required to provide the architectural texture complete, in place as shown on the Drawings, as specified in the Specifications, and as directed by the Engineer shall be included in the lump sum or unit price bid for the items of work requiring architectural texture, and no additional payment will be made therefore.

29.07 Non-Shrink Grout

29.07.01 Scope of Work

Non-Shrink grout shall be used as required on the Drawings and as specified in these Specifications.

29.07.02 Materials

Non-shrink non-metallic grout shall be one of the following or an approved equal:
1. Masterflow 928; BASF.
2. Sonogrout 10K; Degussa Building Systems.
3. Sure-Grip High Performance Grout; Dayton Superior Corporation.

29.07.03 Placement

Installation and mixing of the grout shall be in conformance with the manufacturer’s specifications.

29.07.04 Testing

No special requirements.

29.07.05 Submittals

Submit manufacturer's product specifications for review.

29.07.06 Measurements

Non-shrink grout will not be measured.

29.07.07 Payment

Full compensation furnishing all labor, materials, tools, equipment and incidentals, and for doing all work required for non-shrink grout as shown on the Drawings, as specified in these Specifications, and as directed by the Engineer shall be included in lump sum or unit price bid for the items of work requiring the use of Non-shrink grout, and no additional payment will be made therefore.

30 SPECIAL CONCRETE STRUCTURES

The Contractor's attention is directed to Article 15.02 "Utilities", 15.03 "Protection of Existing Improvements" and 15.04 "Site Review and Monitoring of Project limits and Vicinity" of these Specifications.

30.01 Reinforced Concrete Box Culverts at Jackson Avenue - Bid Item No. 39

30.01.01 Scope of Work

RCB culverts at Jackson Avenue shall consist of all labor, equipment, and materials necessary to construct the RCB culverts at Jackson Avenue, as shown on the Drawings, as specified in these Specifications and as directed by the Engineer. Included in this item shall be structural excavation, structural backfill to street subgrade elevation, dewatering, sheeting or shoring, forming, steel reinforcement, mechanical couplers, concrete, grout, drilling and grouting of steel reinforcing, finishing, curing, temporary K-railing, concrete barriers, site cleanup and all other miscellaneous items necessary for construction of the Jackson Avenue RCB Culvert as shown on the Drawings, as specified in these Specifications, and as directed by the Engineer.

30.01.02 Materials

The structures shall be constructed with Class 1 structural concrete in conformance with Article 29.01, "Structural Concrete," of these Specifications.

Permeable material shall conform to the provisions of Section 68-1.025, "Permeable Material" of the State Specifications.

Weep Holes shall conform to the provisions of Section 51-1.15, "Drains in Walls", of the State Specifications.

Reinforcement shall conform to the provisions of Section 52, "Reinforcement", of the State Specifications.

Geotextile fabric, expansion joints, sealing joints, and neoprene strips, shall be in accordance with Articles 23.08 and 29.04, respectively, of these Specifications.

Chain link fence and gates shall be black vinyl coated and shall conform to the provisions in, Article 28.02 "CL–3.5 and CL-6 Chain Link Fence and Galvanized Gap Fence", and Article 28.06 "Single and Double Swing Gates", of these Specifications.

30.01.03 Placement

The Contractor shall be responsible for coordination with the City of San Jose, the utility companies, and owners of adjacent properties for the construction of the RCB culvert at Jackson Avenue.

The Contractor shall keep the construction site dewatered and free of standing water or excessively muddy conditions in accordance with Article 22.04, "Control of Water," of these Specifications.

The Contractor shall perform structural excavation and structural backfill in accordance with Articles 23.04 and 23.05, respectively, of these Specifications.

Forms, falsework and shoring as required, shall be in accordance with Article 29.05, Forms and Falsework, of these Specifications.

Fence and gate posts shall be installed per Article 28.02 "CL–3.5 and CL-6 Chain Link Fence and Galvanized Gap Fence" and Article 28.06 "Single and Double Swing Gates" of these Specifications.

30.01.04 Testing

Testing for the RCB culvert at Jackson Avenue shall be in accordance with Article 29.01, "Structural Concrete," of these Specifications.

30.01.05 Submittals

Submittals for the RCB culvert at Jackson Avenue shall be in accordance with Article 29.01, "Structural Concrete," of these Specifications.

30.01.06 Measurements

The RCB culvert at Jackson Avenue will not be measured.

30.01.07 Payment

Full compensation for furnishing all labor, materials, tools, equipment and incidentals for doing all work involved in constructing the Jackson Avenue RCB culvert, including structural excavation, structural backfill, dewatering, sheeting or shoring, forming, steel reinforcement, mechanical couplers, concrete, grout, drilling and grouting of steel reinforcing, finishing, curing, temporary K-railing, concrete barriers, site cleanup, complete, in place as shown on the Drawings, as specified in these Specifications and as directed by the Engineer, shall be included in the lump

sum price bid for REINFORCED CONCRETE BOX CULVERTS AT JACKSON AVENUE, Bid Item No. 39.

Full compensation for furnishing all labor, materials, tools, equipment and incidentals and for doing all work required for installing chain link fence complete in place, as shown on the Drawings, as specified in these Specifications, and as directed by the Engineer, shall be included in the unit price bid per linear foot for TYPE CL-3.5 BLACK VINYL COATED FENCE, Bid Item No. 32.

Full compensation for furnishing all labor, materials, tools, equipment and incidentals and for doing all work required for installing chain link fence complete in place, as shown on the Drawings, as specified in these Specifications, and as directed by the Engineer, shall be included in the unit price bid per linear foot for TYPE CL-6 BLACK VINYL COATED FENCE, Bid Item No. 33.

30.02 Precast Reinforced Concrete Box Culvert at Capitol Expressway - Bid Item No. 40A

The Contractor's attention is directed to Article 15.02 "Utilities", 15.03 "Protection of Existing Improvements" and 15.04 "Site Review and Monitoring of Project limits and Vicinity" of these Specifications.

30.02.01 Scope of Work

Precast RCB culverts at Capitol Expressway shall consist of all labor, equipment, and materials necessary to fabricate, deliver and install the Precast RCB culverts at Capitol Expressway as shown on the Drawings, as specified in these Specifications and as directed by the Engineer. Included in this item shall be structural excavation, structural backfill to street subgrade elevation, bedding, dewatering, sheeting or shoring, forming, steel reinforcement, mechanical couplers, concrete, grout, drilling and grouting of steel reinforcing, finishing, curing, chain link fence, temporary K-railing, concrete barriers, site cleanup and all other miscellaneous items necessary for construction of the structures.

30.02.02 Materials

Precast concrete box culvert shall conform to the provisions in Section 51, "Concrete Structures," of the State Specifications.

Earthwork, including sand bedding, shall conform to the provisions in Section 19, "Earthwork," of the State Specifications.

Reinforcement shall be in accordance with the requirements of Section 52, "Reinforcement", of the State Specifications and these Specifications.

Weep Holes shall conform to the provisions of Section 51-1.15, “Drains in Walls”, of the State Specifications.

Chain link fence and gates shall be black vinyl coated and shall conform to the provisions in, Article 28.02 “CL–3.5 and CL-6 Chain Link Fence and Galvanized Gap Fence”, and Article 28.06 “Single and Double Swing Gates”, of these Specifications.

Butyl Rubber Sealant shall be CS102 as manufactured by ConSeal Inc., New Carlisle, OH, or approved equal. Install per manufacturer’s specifications.

Liquid Butyl Primer shall be CS-50 as manufactured by ConSeal Inc., New Carlisle, OH, or approved equal. Install per manufacturer’s specifications.

Exterior Joint Wrap shall be CS-212 as manufactured by ConSeal Inc., New Carlisle, OH, or approved equal. Install per manufacturer’s specifications.

30.02.03 Fabrication

The dry cast method of construction will be permitted when designated on the working drawings. When the dry cast method is used, the results shall be equal in all respects to those obtained by conformance with the provisions in Section 51, "Concrete Structures," of the Standard Specifications and adequate arrangements shall be made and carried out for curing, finishing, and protecting the concrete. External vibrators shall be used and the forms shall be sufficiently rigid to resist displacement or damage. The dry casting forms may be removed at any time after consolidating the concrete providing no slumping of the concrete occurs.

The Contractor shall select the allowable combination of concrete dimensions and reinforcement, where more than one allowable combination of concrete dimensions and reinforcement for precast concrete box culvert is shown on the Drawings.

Concrete for precast units shall be sampled and tested by the precast manufacturer for compressive strength at least once every production shift and not less often than once daily. Test result records shall be available to the Engineer at all times during regular work shifts.

Each precast unit shall be clearly marked by indentation, waterproof paint, or other approved means. Markings shall include the District’s contract number, date of manufacture, name or trademark of the manufacturer, and design earth cover. Each precast unit shall be clearly marked by indentation on either the inner or

outer surface during the process of manufacture so that the location of the top will be evident immediately after the forms are stripped. In addition, the word "top" shall be lettered with waterproof paint on the inside and outside surfaces of the top of each precast unit.

Manufacturing tolerances for precast concrete box culvert sections shall conform to the requirements in Section 11, "Permissible Variations," of AASHTO Specification: M 259.

The ends of the precast members shall be so formed that the sections can be laid together to make a continuous line of box sections with a smooth interior free of appreciable irregularities in the flow line.

Handling devices or holes will be permitted in each member for the purpose of handling and laying. Cored and handling holes shall be plugged and sealed so the members meet all the requirements in the specification.

Splices in circumferential reinforcement shall be made by lapping. Welded connections at splices for the outside apron of steel will be allowed only in the splice area shown on the Drawings. The wall reinforcement on the inside of the box may be lapped and welded at any location or connected by welding at the corners to the slab reinforcement at the inside of the box.

The exposure of spacers, standoffs, or the ends of longitudinal bars used to position the reinforcement shall not be a cause for rejection. Spacers or standoffs shall not be welded to circumferential reinforcement. Spacers or standoffs may be welded to longitudinal reinforcement.

30.02.04 Placement/Installation

Laying of precast concrete box culvert shall conform to the provisions for laying reinforced concrete pipe in Section 65-1.07, "Laying Pipe," of the State Specifications and these special provisions.

Joints shall conform to the provisions for cement mortar or resilient material joints in Section 65-1.06, "Joints," of the State Specifications. An external sealing band conforming to the requirements in ASTM Designation: C 877 may be used in lieu of the joint material in Section 65-1.06.

30.02.05 Testing

Testing for the Precast RCB culverts at Capitol Expressway shall be in accordance with Article 29.01, “Structural Concrete,” of these Specifications.

30.02.06 Submittals

Submittals for the Precast RCB culverts at Capitol Expressway shall be in accordance with Article 29.01, “Structural Concrete,” of these Specifications.

A Certificate of Compliance conforming to the provisions in Section 6-1.07, "Certificates of Compliance," of the Standard Specifications shall be provided to the Engineer for each precast member shipment. The certificate shall be signed by the manufacturer's quality control representative and shall state that all materials and workmanship comply in all respects with the specification requirements and all approved submittals.

Working drawings shall be submitted to the Engineer for approval in conformance with the provisions in Section 5-1.02, "Plans and Working Drawings," of the Standard Specifications. Working drawings shall show the construction method, precast unit dimensions, configuration of the reinforcement (including splice type and location), and height of earth cover.

30.02.07 Measurements

Precast concrete box culvert at Capitol Expressway will not be measured.

30.02.08 Payment

Full compensation for all work required for the fabrication, delivery and erecting the precast concrete box culvert members including structural excavation, structural backfill, bedding, dewatering, sheeting or shoring, forming, steel reinforcement, mechanical couplers, concrete, grout, drilling and grouting of steel reinforcing, finishing, curing, chain link fence, temporary K-railing, concrete barriers, site cleanup and all other miscellaneous items, complete, in place at Capitol Expressway as shown on the Drawings, as specified in these Specifications, and as directed by the Engineer shall be considered as included in the lump sum price bid for PRECAST CONCRETE BOX CULVERT at CAPITOL EXPRESSWAY, - Bid Item No. 40A.

Full compensation for furnishing all labor, materials, tools, equipment and incidentals and for doing all work required for installing chain link fence complete in place, as shown on the Drawings, as specified in these Specifications, and as directed by the Engineer, shall be included in the unit price bid per linear foot for TYPE CL-3.5 BLACK VINYL COATED FENCE, Bid Item No. 32.

Full compensation for furnishing all labor, materials, tools, equipment and incidentals and for doing all work required for installing chain link fence complete

in place, as shown on the Drawings, as specified in these Specifications, and as directed by the Engineer, shall be included in the unit price bid per linear foot for TYPE CL-6 BLACK VINYL COATED FENCE, Bid Item No. 33.

30.03 Precast Reinforced Concrete Box Culvert at Story Road – Bid Item No. 105

The Contractor's attention is directed to Article 15.02 "Utilities", 15.03 "Protection of Existing Improvements" and 15.04 "Site Review and Monitoring of Project limits and Vicinity" of these Specifications.

30.03.01 Scope of Work

Precast RCB culverts at Story Road shall consist of all labor, equipment, and materials necessary to fabricate, deliver and install the Precast RCB culverts at Capitol Expressway as shown on the Drawings, as specified in these Specifications and as directed by the Engineer. Included in this item shall be structural excavation, structural backfill to street subgrade elevation, bedding , dewatering, sheeting or shoring, forming, steel reinforcement, mechanical couplers, concrete, grout, drilling and grouting of steel reinforcing, finishing, curing, tubular hand railing, temporary K-railing, concrete barriers, site cleanup and all other miscellaneous items necessary for construction of the structures.

30.03.02 Materials

Precast concrete box culvert shall conform to the provisions in Section 51, "Concrete Structures," of the State Specifications.

Earthwork, including sand bedding, shall conform to the provisions in Section 19, "Earthwork," of the State Specifications.

Reinforcement shall be in accordance with the requirements of Section 52, "Reinforcement", of the State Specifications and these Specifications.

Chain link fence and gates shall be black vinyl coated and shall conform to the provisions in, Article 28.02 "CL–3.5 and CL-6 Chain Link Fence and Galvanized Gap Fence", and Article 28.06 "Single and Double Swing Gates", of these Specifications.

Butyl Rubber Sealant shall be CS102 as manufactured by ConSeal Inc., New Carlisle, OH, or approved equal. Install per manufacturer's specifications.

Liquid Butyl Primer shall be CS-50 as manufactured by ConSeal Inc., New Carlisle, OH, or approved equal. Install per manufacturer's specifications.

Exterior Joint Wrap shall be CS-212 as manufactured by ConSeal Inc., New Carlisle, OH, or approved equal. Install per manufacturer's specifications.

30.03.03 Fabrication

The dry cast method of construction will be permitted when designated on the working drawings. When the dry cast method is used, the results shall be equal in all respects to those obtained by conformance with the provisions in Section 51, "Concrete Structures," of the Standard Specifications and adequate arrangements shall be made and carried out for curing, finishing, and protecting the concrete. External vibrators shall be used and the forms shall be sufficiently rigid to resist displacement or damage. The dry casting forms may be removed at any time after consolidating the concrete providing no slumping of the concrete occurs.

The Contractor shall select the allowable combination of concrete dimensions and reinforcement, where more than one allowable combination of concrete dimensions and reinforcement for precast concrete box culvert is shown on the Drawings.

Concrete for precast units shall be sampled and tested by the precast manufacturer for compressive strength at least once every production shift and not less often than once daily. Test result records shall be available to the Engineer at all times during regular work shifts.

Each precast unit shall be clearly marked by indentation, waterproof paint, or other approved means. Markings shall include the District contract number, date of manufacture, name or trademark of the manufacturer, and design earth cover. Each precast unit shall be clearly marked by indentation on either the inner or outer surface during the process of manufacture so that the location of the top will be evident immediately after the forms are stripped. In addition, the word "top" shall be lettered with waterproof paint on the inside and outside surfaces of the top of each precast unit.

Manufacturing tolerances for precast concrete box culvert sections shall conform to the requirements in Section 11, "Permissible Variations," of AASHTO Specification: M 259.

The ends of the precast members shall be so formed that the sections can be laid together to make a continuous line of box sections with a smooth interior free of appreciable irregularities in the flow line.

Handling devices or holes will be permitted in each member for the purpose of handling and laying. Cored and handling holes shall be plugged and sealed so the members meet all the requirements in the specification.

Splices in circumferential reinforcement shall be made by lapping. Welded connections at splices for the outside apron of steel will be allowed only in the splice area shown on the Drawings. The wall reinforcement on the inside of the box may be lapped and welded at any location or connected by welding at the corners to the slab reinforcement at the inside of the box.

The exposure of spacers, standoffs, or the ends of longitudinal bars used to position the reinforcement shall not be a cause for rejection. Spacers or standoffs shall not be welded to circumferential reinforcement. Spacers or standoffs may be welded to longitudinal reinforcement.

30.03.04 Placement/Installation

Laying of precast concrete box culvert shall conform to the provisions for laying reinforced concrete pipe in Section 65-1.07, "Laying Pipe," of the State Specifications and these special provisions.

Joints shall conform to the provisions for cement mortar or resilient material joints in Section 65-1.06, "Joints," of the State Specifications. An external sealing band conforming to the requirements in ASTM Designation: C 877 may be used in lieu of the joint material in Section 65-1.06.

30.03.05 Testing

Testing for the Precast RCB culverts at Story Road shall be in accordance with Article 29.01, “Structural Concrete,” of these Specifications.

30.03.06 Submittals

Submittals for the Precast RCB culverts at Story Road shall be in accordance with Article 29.01, “Structural Concrete,” of these Specifications.

A Certificate of Compliance conforming to the provisions in Section 6-1.07, "Certificates of Compliance," of the Standard Specifications shall be provided to the Engineer for each precast member shipment. The certificate shall be signed by the manufacturer's quality control representative and shall state that all materials and workmanship comply in all respects with the specification requirements and all approved submittals.

Working drawings shall be submitted to the Engineer for approval in conformance with the provisions in Section 5-1.02, "Plans and Working Drawings," of the Standard Specifications. Working drawings shall show the construction method, precast unit dimensions, configuration of the reinforcement (including splice type and location), and height of earth cover.

30.03.07 Measurement

Precast concrete box at Story Road will not be measured.

30.03.08 Payment

Full compensation for all work required for the fabrication, delivery and erecting the precast concrete box culvert members complete, in place at Story Road as shown on the Drawings, as specified in these Specifications, and as directed by the Engineer shall be included in the lump sum price bid for PRECAST CONCRETE BOX CULVERT AT STORY ROAD – Bid Item No. 105.

Full compensation for furnishing all labor, materials, tools, equipment and incidentals and for doing all work required for installing chain link fence complete in place, as shown on the Drawings, as specified in these Specifications, and as directed by the Engineer, shall be included in the unit price bid per linear foot for TYPE CL-3.5 BLACK VINYL COATED FENCE, Bid Additive Item No. 69, if/when included in the awarded project by the District, and no separate payment shall be made therefore.

Full compensation for furnishing all labor, materials, tools, equipment and incidentals and for doing all work required for installing chain link fence complete in place, as shown on the Drawings, as specified in these Specifications, and as directed by the Engineer, shall be included in the unit price bid per linear foot for TYPE CL-6 BLACK VINYL COATED FENCE, Bid Additive Item No. 100 if/when included in the awarded project by the District, and no separate payment shall be made therefore.

30.04 Pedestrian Bridge Replacement - Concrete Abutments

30.04.01 Scope of Work

Pedestrian bridge concrete abutments shall consist of all work and material necessary to construct bridge abutments, including reinforced concrete abutments, drilled piers, foundations, integrated abutment wing walls, structural approach walls, relocating electrical items as required, structural excavation, CIDH pile, structural backfill, sheet piling, or shoring (if required as necessary) forming, steel reinforcing, concrete, grouting, finishing, curing, embedded metal, bridge material,

coordinating with utility companies, and all other miscellaneous items necessary for the construction of the bridge abutments as shown on the Drawings, as specified in these Specifications, and as directed by the Engineer.

30.04.02 Materials

Bridge abutments, wing walls, drilled piers, and foundations shall be constructed with Class "1" structural concrete in accordance with Article 29.01 "Structural Concrete" of these Specifications.

The drilled concrete piers shall conform to provisions I Article 30.12, "Cast-in-Drilled Hole Concrete Piers" of these Specifications.

All exposed vertical concrete surfaces associated with the pedestrian bridge abutments shall be architecturally treated in accordance with Article 29.06, "Architectural Finish" of these Specifications.

Curing concrete shall be in accordance with the requirement of Section 90-7, "Curing Concrete", of the State Specifications.

Permeable material and weep holes shall be installed in accordance with Section 68-1.025 and 51-1.15 of the State Specifications.

Geotextile fabric, expansion joints, sealing joints, and neoprene strips shall be installed in accordance with Articles 23.08, "Geotextile Fabric" and 29.04, "Joints, Waterstops and Sealants" respectively, of these Specifications.

Reinforcement shall be in accordance with the requirements of Section 52, Reinforcement, of the State Specifications and these Specifications.

30.04.03 Placement

Placement for Class "1" concrete shall be in accordance with Article 29.01, "Structural Concrete," of these Specifications.

Any damage resulting from the Contractor's removal of soil for the construction of the bridge abutments shall be repaired to the satisfaction of the Engineer at contractor's expense.

Excavation and backfill required to construct the bridge abutment shall be in accordance with Article 23.04, "Structural Excavation" and 23.05, "Structural Backfill", of these Specifications.

The contractor shall provide sheet piling and shoring as required to support the exposed soil face during the construction of the bridge abutments in accordance with Article 23.10, "Shoring", of these Specifications.

30.04.04 Testing

Testing for Class "1" concrete shall be in accordance with Article 29.01 "Structural Concrete" of these Specifications.

30.04.05 Submittals

Submittals for Class "1" concrete shall be in accordance with Article 29.01, "Structural Concrete," of these Specifications.

30.04.06 Measurements

Pedestrian bridge concrete abutment will not be measured.

30.04.07 Payment

Full compensation for furnishing all labor, materials, tools, equipment and incidentals, and for doing all work to construct reinforced concrete pedestrian bridge abutments as shown on the Drawings, as specified by these Specifications, and as directed by the Engineer shall be included in the lump sum price bid for LYNDALE PEDESTRIAN BRIDGE REPLACEMENT – Bid Additive Item No. 72, and no separate payment will be made therefore.

30.05 Lyndale Pedestrian Bridge Replacement - Bid Item No. 72

The Contractor's attention is directed to Article 15.02 "Utilities", 15.03 "Protection of Existing Improvements" and 15.04 "Site Review and Monitoring of Project limits and Vicinity" of these Specifications.

30.05.01 Lyndale Pedestrian Bridge

30.05.01.01 Scope of Work

Lyndale Pedestrian Bridge Replacement shall consist of all work and materials necessary to fabricate, deliver, and install a fully engineered, prefabricated, clear span steel superstructures for the Lyndale Pedestrian Bridge Replacement. Included in this item of work shall be furnishing and installing the steel superstructure along with transportation and delivery of the bridge to the project site, leveling, shimming, and grouting the bearing devices to set the bridge in its final condition, final bolt-down, decking, bracing, anchoring, grouting, post-

installation paint touch-up, and all other miscellaneous items necessary for the furnishing and installing the bridge steel superstructure as shown on the Drawings, as specified in these Specifications, and as directed by the Engineer.

30.05.01.02 Qualifications

Bridge Manufacturer's Qualifications:

Qualified suppliers must have at least 5 years experience designing and fabricating these types of structures and a minimum of 5 successful bridge projects of similar construction, each of which has been in service at least 3 years.

Bridge Supplier Documentation shall include:

- Representative design calculations
- Representative drawings
- Splicing and erection procedures
- Warranty information
- Inspection and Maintenance procedures
- AISC Shop Certification
- AISC Complex Bridge Certification
- Welder Qualifications
- Painter Qualifications

The engineer will evaluate and verify the accuracy of the submittal. If the Engineer determines that the qualifying criteria have not been met, the Contractor's proposed supplier shall be rejected. The Engineer's ruling shall be final.

30.05.01.03 Materials

The bridge steel superstructures shall be designed and pre-manufactures according to the design guidelines shown on the Drawings. The bridge shall be designed by a Civil or Structural Engineer licensed in the State of California.

The bridge material shall be high strength, self-weathering, low ally, atmospheric corrosion-resistant ASTM A847, cold formed, welded square and rectangular tubing using ASTM A588, ASTM A606 or ASTM A242 plate and structural shapes, (Fy = 50,000psi).

The minimum corrosion index of atmospheric corrosion resistant steel, as determined in accordance with ASTM G101, shall be 6.0. All exposed surfaces of corrosion-resistant steel shall be cleaned in accordance with Steel Structures Painting Council Surface preparation No. 6, Commercial Blasting Cleaning, SSPC-SP6, latest edition.

Shop welding shall utilize E80 series electrodes which have the same weathering characteristics as self-weathering, corrosion resistant steel. Welding shall be performed by certified welders per AWS "Standard Qualification Procedure" to perform type of work required. All welding shall be in conformance with the AWS welding Code.

Field splices shall be fully bolted with ASTM A325 type 3 high strength bolts in accordance with the "Specifications for Structural Joints Using ASTM A325 or A490 Bolts" and shall be tensioned as a slip critical connection. Bolts shall have the same weathering characteristics as the self-weathering, corrosion resistant steel.

All decking shall be full thickness planks unless approved otherwise.

Wood decking shall be naturally durable hardwood Ipe (Tabebuia Spp Lapacho Group) or approved equal. All planks shall be partially air dried to a moisture content of 15% to 20%, and shall be supplied S4S (surfaced four sides), E4E (eased four edges), with the edges eased to a radius of 1/8". Measured at 30% moisture content, the width and thickness shall not vary from specified dimensions by more than ± 0.04 inches. All planks shall be supplied with the ends sealed with "Anchorseal" Mobil CER-M or an equal aqueous wax log sealer.

All wood decking fasteners to be zinc plated. Self-tapping screws or hex-head bolts, with a steel plank holddown, are to be used at the ends of planks. Self-tapping screws or carriage bolts are to be used as interior connection fasteners. Powder actuated fasteners will not be allowed.

Grout and miscellaneous metals shall be in accordance with Article 29.07, "Non-Shrink Grout" and Article 30.06, "Miscellaneous Metal (Bridge)" , respectively, of these Specifications.

Guardrail and, safety rails on the pedestrian bridge, and handrails used on the pedestrian bridge and on the approaches to the pedestrian bridge shall meet all the requirements of the California Building Code, California Industry Safety Orders and manufacturers' printed recommendations.

Guardrails shall meet the Coyote Watershed Aesthetic Guidelines. Guardrail along the pedestrian bridge shall be horizontal angles of sufficient strength to meet the code requirements and be located on the outside of the bridge and spaced at 3.5" on centers. Guardrail along the approaches to the pedestrian bridge shall be 4'-6" high and shall include a handrail as shown on the drawings.

A toe board shall be provided with all guardrails, and along both sides of the pedestrian bridge.

30.05.01.04 Design

Structural design of the prefabricated pedestrian bridge structure shall be performed by or under the direct supervision of a licensed structural engineer and done in accordance with recognized engineering practices and principles. The engineer shall be licensed to practice in California.

The bridge shall conform to the provisions in Section 55, “Steel Structures” of the State Specifications, these Special Provisions and the project Drawings.

The bridge design shall be in accordance with the "Guide Specifications for Pedestrian Bridges" by the American Association of State Highway and Transportation Officials (AASHTO), dated 2008, and these special provisions.

Half-through truss vertical members shall be proportioned to resist lateral load as specified in Specification Article 1.3.6.1 of this guide, which modifies the provisions of AASHTO Article 10.16.12.1. The minimum 5/16" metal thickness required by AASHTO Article 10.8 shall not apply. Tubular members shall have a minimum thickness of 1/4” per Specification Article 1.3.4.

Structural steel design shall be in accordance with those sections of the "Manual of Steel Construction: Allowable Stress Design" (AISC) related to design requirements and allowable stresses.

Welded tubular structure design shall be in accordance with the Structural Welding Code (ANSI/AWS D1.1).

All welded tubular connections shall be checked, when within applicable limits, for the limiting failure modes outlined in the ANSI/AWS D1.1 Structural Welding Code.

Sawn lumber shall be designed in accordance with the ANSI/AF&PA NDS, “National Design Standard for Wood Construction”, as published by the American Forest & Paper Association. Design properties for naturally durable hardwoods shall be in accordance with “Tropical Timbers of the World”, as published by the U.S. Forest Products Laboratory.

The bridge structure design shall consider its own dead load (superstructure and wood deck). Maximum allowable dead load of the superstructure is as noted on the structural Drawings.

The bridge shall be designed for an 85 psf uniform live loading on the full deck area, or for one 10,000 pound 4-wheeled vehicle load, whichever loading produces maximum stresses in the structural members being designed.
Deflection of the main truss members due to service live load shall not exceed 1/500 of span length.

The deflection of the floor system members (floor beams and stringers) due to service pedestrian live load shall not exceed 1/360 of their respective spans.

Seismic design of the bridge shall be based on the "Guide Specification for Seismic Design of Steel Bridges", first edition, December 2001 (Caltrans). The design spectral acceleration shall be the peak of the ARS curve provided on the project plans (1.3g).

The effects of three-dimensional loading (including "U-frame" requirements) shall be considered in the design of the structure. The "U-frame" forces shall be added to the forces derived from a three dimensional analysis of the bridge.

The analysis and design of the triangulated truss bridge shall account for moments induced in members due to joint fixity where applicable. Moments due to both truss deflection and joint eccentricity must be considered.

All tubular joints shall be plain un-stiffened joints (made without the use of reinforcing plates) except as follows:

- Floor beams hung beneath the lower chord of the structure may be constructed with or without stiffener (or gusset) plates, as required by design.
- Where chords, end floor beams and in high profiles the top end struts weld to the end verticals, the end verticals (or connections) may require stiffening to transfer the forces from these members into the end vertical.
- Truss vertical to chord connections.
- NOTE: The effects of fabrication tolerances shall be accounted for in the design of the structure. Special attention shall be given to the actual fit-up gap at welded truss joints.

The horizontal safety rail system shall be designed for an infill loading of 200 pounds, applied horizontally at right angles, to a one square foot area at any point in the system.

For transverse wood decking, wheel loads shall be assumed to act on one plank only. For a 10,000 pound 4-wheeled vehicle, the single-wheel design load shall be 3,000 pounds distributed on the plank along a length equal to 8-1/2 inches. Decking shall also be checked for a minimum 100 psf local loading. The plank shall be designed for shear and bending in accordance with the support conditions and spacing.

30.05.01.05 Fabrication/Inspection

The bridge shall be shop-fabricated.

When the collection of water inside a structural tube is a possibility, either during construction or during service, the tube shall be provided with a drain hole at its lowest point to let water out.

All ends of square and/or rectangular structural steel tubing shall be sealed from moisture either by welding to intersecting tubing or by finishing with a seal welded end cap.

The prefabricated bridge shall be inspected by a Certified Weld Inspector that is qualified under the AWS QC-1 program at the fabrication shop. The Contractor shall notify the Engineer and the Certified Weld Inspector at least 10 days prior to commencing the fabrication of the prefabricated bridge. Said notice shall contain the location of the fabrication shop and a schedule indicating the anticipated duration of fabrication operations.
This inspection shall include as a minimum requirement the following: review of shop drawings, weld procedures, welder qualifications and weld testing reports, and visual inspection of welds. A report shall be produced indicating the above items were reviewed. The report shall be signed by the CWI, signifying compliance with AWS D1.1 codes.

1. All welds to be visually inspected.
2. Ten percent (10%) of all welds to be magnetic particle tested.
3. Ultrasonic testing of 25% of all bottom chord full-penetration welds.
4. Radiographic or ultrasonic testing of all other chord-full penetration welds.

Inspector certifications and all test reports shall be submitted to the Engineer. All costs associated with the nondestructive testing to be performed shall be paid for by the Contractor.

The bridge shall be fabricated by a fabricator who is currently certified by the American Institute of Steel Construction to have the personnel, organization, experience, capability, and commitment to produce fabricated structural steel for the category “Major Steel Bridges” as set forth in the AISC Certification Program. Quality control shall be in accordance with procedures outlined for AISC certification. For painted structures, the fabricator must hold a "Sophisticated Paint Endorsement" as set forth in the AISC certification program. Furthermore, the bridge shall be fabricated in a facility owned and/or leased by the corporate owner of the manufacturer, and fully dedicated to bridge manufacturing.

All workmanship, fabrication and shop connections shall be in accordance with the applicable requirements of the 2007 California Building Code, the Specifications for Design, Fabrication and Erection of Structural Steel for Buildings by the American Institute of steel Construction (AISC), latest edition, and the latest edition of the Bridge Design Specifications. In case of conflict, the most stringent requirement shall govern.

Welding and weld procedure qualification tests shall conform to the provisions of ANSI/AWS D1.1 "Structural Welding Code", 1998 Edition. Filler metal shall be in accordance with the applicable AWS Filler Metal Specification (i.e. AWS A 5.28 for the GMAW Process).

Welders shall be properly accredited operators, each of whom shall submit certification of satisfactorily passing AWS standard qualification tests for all positions with unlimited thickness of base metal, have a minimum of 6 months experience in welding tubular structures and have demonstrated the ability to make uniform sound welds of the type required.

Special attention shall be given to developing sufficient weld throats on tubular members. Fillet weld details shall be in accordance with AWS D1.1, Section 3.9 (See AWS Figure 3.2). Unless determined otherwise by testing, the loss factor "Z" for heel welds shall be in accordance with AWS Table 2.8. Fillet welds which run onto the radius of a tube shall be built up to obtain the full throat thickness (See Figure 7.1). The maximum root openings of fillet welds shall not exceed 3/16" in conformance with AWS D1.1, Section 5.22. Weld size or effective throat dimensions shall be increased in accordance with this same section when applicable (i.e. fit-up gaps> 1/16").

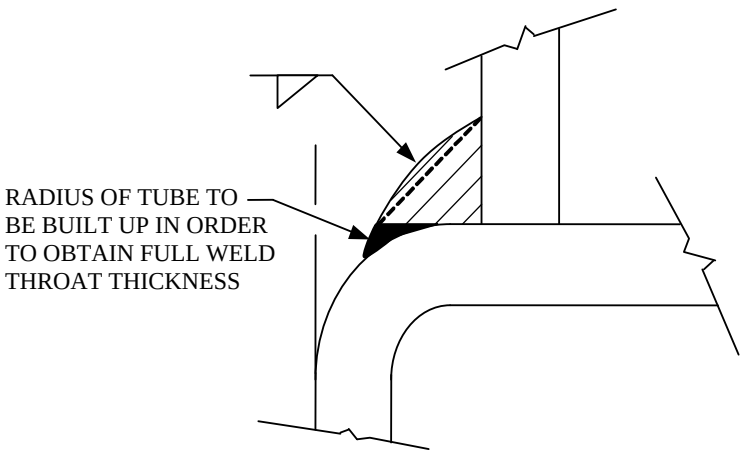

FIGURE 7.1
BUILD UP RADIUS WELD

The fabricator shall have verified that the throat thickness of partial joint penetration groove welds (primarily matched edge welds or the flare-bevel-groove welds on underhung floor beams) shall be obtainable with their fit-up and weld procedures. Matched edge welds shall be "flushed" out when required to obtain the full throat or branch member wall thickness.

For full penetration butt welds of tubular members, the backing material shall be fabricated prior to installation in the tube so as to be continuous around the full tube perimeter, including corners. Backing may be of four types:

- A "box" welded up from four (4) plates.
- Two "channel" sections, bent to fit the inside radius of the tube, welded together with full penetration welds.
- A smaller tube section which slides inside the spliced tube.
- A solid plate cut to fit the inside radius of the tube.

Corners of the "box" backing, made from four plates, shall be welded and ground to match the inside corner radii of the chords. The solid plate option shall require a weep hole either in the chord wall above the "high side" of the plate or in the plate itself. In all types of backing, the minimum fit-up tolerances for backing must be maintained at the corners of the tubes as well as across the "flats".

All bolted connections, including field bolted connections, shall be made with high-strength steel fastener assemblies and shall be tensioned as a slip critical connection. The contractor shall submit to the Engineer for review the proposed method, including a list of equipment to be used, for tensioning bolts in field

bolted splice connections a minimum of 3 weeks prior to scheduled bolt installation.

Wood Decking planks are to be placed tight together with no gaps. Every plank must be attached with at least one fastener at each end. Planks are to be drilled prior to installation of bolts and/or screws. In addition to at least one fastener at each end of every plank (typical for all installations), planks for bridges with widths of 72” to 143” shall be attached with a minimum of two fasteners at a location approximately near the center of the bridge width.

30.05.01.06 Erection of Prefabricated Bridge

The Contractor shall be responsible for verifying all field dimensions and conditions.

Erection of prefabricated bridge shall conform to Section 55, "Steel Structures," of the State Specifications and these special provisions.

A minimum of two weeks prior to the delivery of the prefabricated bridge, the Contractor shall verify the length of the prefabricated bridge with the in-place location of the anchor bolt pockets, and any required adjustments shall be made by the bridge manufacturer to base plates and other structural members, prior to bridge shipment.

A minimum of two weeks prior to the delivery and unloading of the prefabricated bridge, the Contractor shall submit to the Engineer and receive approval for a “Bridge Delivery and Erection Plan”. This plan shall detail the proposed delivery route to the site, a site plan for equipment at the site for unloading and erection, proper lifting and splicing procedures and special safety measures to be taken on the day of delivery. The plan shall also indicate the proposed date and time of delivery and estimated duration of unloading and erection.

The Contractor shall be responsible for unloading the prefabricated bridge from the delivery truck when it arrives at the job site from the manufacturer, bolting field splice connections, placing the prefabricated bridge on the bridge foundations, and final bolt-down of the bridge.

Non-shrink grout at anchor bolt pipes and for bridge bearing leveling pads shall be poured after bridge superstructure is placed. Prior to placement of the non-shrink grout, the bridge shall be temporarily supported. Support shall remain in place until the non-shrink grout has attained a compressive strength of 3000 psi.

The prefabricated bridge shall be placed on the bridge foundations in conformance with the Drawings and these Special Provisions. Extreme care shall be exercised

in handling, moving and erecting operations to avoid twisting, racking or other distortion that would result in damage to the bridge. The bridge lift points shall be at the points specified by the bridge manufacturer and approved by the Engineer.

Field welding shall be inspected and tested by the Engineer.

30.05.01.07 Submittals

Design Calculations

Complete design calculations showing all stresses and deflections for dead and live loads shall be furnished to the Engineer for review. Calculations shall be signed by a registered Civil Engineer of the State of California.

The calculations shall include all design information necessary to determine the structural adequacy of the bridge. The calculations shall include the following:

- All AISC allowable stress checks for axial, bending and shear forces in the critical member of each truss member type (i.e. top chord, bottom chord, floor beam, vertical, etc.).
- Checks for the critical connection failure modes for each truss member type (i.e. vertical, diagonal, floor beam, etc.). Special attention shall be given to all welded tube on tube connections (see section 3.3.2 for design check requirements).
- Main truss deflection checks.
- U-Frame stiffness checks (used to determine K factors for out-of-plane buckling of the top chord) for all half through or "pony" truss bridges.
- Deck design.
- NOTE: The analysis and design of triangulated truss bridges shall account for moments induced in members due to joint fixity where applicable. Moments due to both truss deflection and joint eccentricity must be considered.

Shop Drawings

Complete shop drawings shall be furnished to the Engineer for review. Shop drawings shall be signed by a registered Civil Engineer of the State of California.

All relative design information such as member sizes, connections, bridge reactions, and general notes shall be clearly specified on the drawings. Drawings shall have cross referenced details and sheet numbers.

Welding Procedures and Welder Certifications

Welder certifications in compliance with AWS standard qualification tests shall be furnished to the Engineer for review, as well as welding procedures in compliance ANSI/AWS D1.1 "Structural Welding Code", latest Edition.

Prefabricated Bridge Inspector Certification and Test Reports

Inspector certifications and all test reports shall be submitted to the Engineer.

Structural Steel Certification

The Contractor shall furnish the Engineer with a copy of all mill orders, certified mill test reports and a certificate of compliance for all fabricated structural steel to be used in the work.

Bridge Maintenance Procedures

The bridge manufacturer shall provide written inspection and maintenance procedures to be followed by the bridge owner.

30.05.01.08 Measurements

Pedestrian Bridge will not be measured.

30.05.01.09 Payment

Full compensation for furnishing all labor, materials, tools, equipment, and incidentals, including the steel superstructure and decking for the design, fabrication, delivery, erections and for doing all work required to construct the Metal-Pedestrian Bridge Replacement complete, in place as shown on the Drawings, as specified in these Specifications and as directed by the Engineer shall be included in the lump sum price bid for LYNDALE PEDESTRIAN BRIDGE REPLACEMENT, Bid Additive Item No. 72 if/when included in the awarded project by the District, and no separate payment shall be made therefore.

30.05.02 Miscellaneous Metal (Bridge)

30.05.02.01 Scope of Work

Miscellaneous metal (bridge) shall conform to the provisions for miscellaneous bridge metal in Section 75, "Miscellaneous Metal," of the Standard Specifications and these special provisions and the following:

A. Anchor bolts, washers and nuts at bridge bearings
B. Steel pipe at bridge anchor bolts
C. Bottom steel plates in bridge bearing assemblies

30.05.02.02 Materials

Steel plates in bridge bearing assemblies shall be galvanized ASTM A36 plate (Fy = 36,000 psi). Anchor bolts shall be ASTM A449, nuts shall be ASTM A563 and washers shall be F844. Steel pipe shall be ASTM A53 Gr. B.

30.05.02.03 Placement

Placement of miscellaneous metals shall conform to Section 75, "Miscellaneous Metal," of the State Specifications and as indicated on Drawings.

30.05.02.04 Testing

No special requirements.

30.05.02.05 Submittals

Submit product data and specifications for miscellaneous metals for review.
Submit product data, specifications and anchor bolt layout for review.

30.05.02.06 Measurements

Miscellaneous metals will not be measured.

30.05.02.07 Payment

Full compensation for furnishing all labor, materials, tools, equipment, and incidentals, for the design, fabrication, delivery, erections and for doing all work required to construct the Miscellaneous Metal (Bridge) complete, in place as shown on the Drawings, as specified in these Specifications and as directed by the Engineer shall be included in the lump sum price bid for LYNDALE PEDESTRIAN BRIDGE REPLACEMENT, Bid Additive Item No. 72A if/when

included in the awarded project by the District, and no separate payment shall be made therefore.

30.06 Dobern Ramps and Bridge Raising - Bid Item 40B

30.06.01 Scope of Work

Dobern Ramps and Bridge Raising shall consist of all labor, materials, tools, equipment, and incidentals necessary to reconstruct the bridge footings and erect the structure to a higher elevation and includes the construction of the conform ramps and pathway conforms.

Dobern Ramps and Bridge Raising is not designed. The Drawings contain preliminary information; however the plans and specification are not prepared.

The Contractor shall plan his work for all other items of work shown on the Drawings and specified in these Specifications assuming that the District elects not to authorize any portion of the Dobern Ramps and Bridge Raising. Work necessary to construct all improvements without the raising of the Dobern Bridge shall be considered incidental and included in the various items of work.

30.06.02 Materials

Materials are to be determined if/when the Drawings and Specifications for the Dobern Ramps and Bridge Raising are completed by the District.

30.06.03 Placement

Materials are to be determined if/when the Drawings and Specifications for the Dobern Ramps and Bridge Raising are completed by the District.

30.06.04 Testing

Materials are to be determined if/when the Drawings and Specifications for the Dobern Ramps and Bridge Raising are completed by the District.

30.06.05 Submittals

Materials are to be determined if/when the Drawings and Specifications for the Dobern Ramps and Bridge Raising are completed by the District.

30.06.06 Measurements

The Dobern Ramps and Bridge Raising will not be measured.

30.06.07 Payment

All bidders shall bid the amount shown on the bid form for Bid Item No. 40B "DOBERN RAMPS AND BRIDGE RAISING." This amount is estimated only. The amount of expenditure under this item may vary from zero to the total amount of the item. If the Districts elects to complete the drawings and specifications for the Dobern Ramps and Bridge Raising, and chooses to complete the construction, the fee and method of payment will be determined per Article 5.04 "Change in Contract Price."

The Contractor shall not start any work related to the Dobern Ramps and Bridge Raising without specific written authorization from the Engineer. There will be no payment for any work performed by the Contractor prior to such written authorization from the Engineer.

The District may elect not to authorize any portion of the Dobern Ramps and Bridge Raising, Bid Item No. 40B. The Contractor's attention is directed to Section 5.03 "Allowable Quantity Variation", Subsection 5.03.02B. "Eliminated Items", of these Specifications.

If the District elects to not authorize any portion of the Dobern Ramps and Bridge Raising, full compensation for performing all work for the construction of all other improvements shown on the Drawings and specified in these Specifications without the raising of the Dobern Bridge shall be considered incidental and included in the contract prices paid for the various items of work, and no additional time or compensation will be allowed, therefore.

30.07 Drilled Pier Walls – Retaining and Flood Walls – Bid Item Nos. 41, 106, 141

The Contractor's attention is directed to Article 15.02 "Utilities", 15.03 "Protection of Existing Improvements" and 15.04 "Site Review and Monitoring of Project limits and Vicinity" of these Specifications.

30.07.01 Scope of Work

Drilled Pier Walls - Retaining and Floodwalls shall consist of all work and materials necessary to construct retaining and floodwalls consisting of reinforced concrete stem supported on concrete pile caps and cast-in-place concrete piles. Included in this item of work shall be structure excavation, structure backfill, piling, forming, bar reinforcing steel, concrete, curing and site clean-up, and all

other miscellaneous items necessary for construction of Drilled Pier Walls - Retaining and Floodwalls as shown on the drawings, as specified in these Specifications, and as directed by the Engineer.

Drilled Pier Walls - Retaining and Floodwalls shall conform to the provisions in Sections 19, "Earthwork", 49, "Piling", 52, "Reinforcement", and 90, "Portland Cement Concrete", of the State Specifications and Article 30.12, "Cast-in-Drilled Holes Concrete Piles", of these Specifications.

Chain link fence and gates shall be black vinyl coated and shall conform to the provisions in, Article 28.02 "CL–3.5 and CL-6 Chain Link Fence and Galvanized Gap Fence", and Article 28.06 "Single and Double Swing Gates", of these Specifications.

30.07.02 Materials

Concrete for cast-in-drilled-hole concrete piles, floodwall pile caps and stem walls shall conform to the provisions in Section 90, Class 1 "Portland Cement Concrete", of the State Specifications and these Specifications.
Reinforcing bars shall conform to ASTM Designation: A 706.

Expansion joint filler shall conform to ASTM Designation: D 1751 or ASTM Designation: D 2000 2AA-805.

Pervious Backfill Material shall conform to the provisions in Section 68-1.025, "Permeable Material", of the State Specifications.

Weep Holes shall conform to the provisions in Section 51-1.15, "Drains in Walls", of the State Specifications.

Chain link fence and gates shall be black vinyl coated and shall conform to the provisions in, Article 28.02 "CL–3.5 and CL-6 Chain Link Fence and Galvanized Gap Fence", and Article 28.06 "Single and Double Swing Gates", of these Specifications.

30.07.03 Placement

Concrete construction shall be true and plumb in the lateral direction and shall conform to Article 29.01 "Structural Concrete" of these Specifications, and as shown on the Drawings.

Reinforcement shall be in accordance with the Article 29.01, "Structural Concrete" of these Specifications and as shown on the drawings.

Splices in vertical reinforcement will not be allowed.

Expansions and control joints shall be accordance with the Article 29.04, “Expansion Joints, Waterstops, and Sealing Joints” of these Specifications and as shown on the Drawings.

Curing shall be in accordance with the Article 29.01, “Structural Concrete” of these Specifications.

Finish shall be in accordance with the Article 29.06, “Architectural Finish” of these Specifications.

30.07.04 Testing

Testing for concrete components of Drilled Pier Walls - Retaining and Floodwalls shall be in accordance with Article 29.01 "Structural Concrete," of these Specifications.

30.07.05 Submittals

Submittal for concrete components of Drilled Pier Walls - Retaining and Floodwalls shall be in accordance with Article 29.01 "Structural Concrete," of these Specifications.

The Contractor shall submit 4 sets of elevation and plan layout drawings to the Engineer, as provided in Section 5-1.02, “Plans and Working Drawings”, of the State Specifications. The drawings shall be to scale and shall show the proposed top and bottom elevation lines. The top and bottom elevation lines shown on the Drawings are minimums and they shall be fully contained in the proposed layout drawings. The drawings shall include, within the limits shown on the Drawings, the panel sizes, pile spacing, footing steps, aesthetic features, and locations of expansion joints. The Contractor shall allow two weeks after complete drawings are submitted for review.

30.07.06 Measurements

Drilled Pier Walls - Retaining and Floodwalls will be measured by the square foot from top of pile cap to top of wall and from end to end along the centerline of the top of the installed floodwall.

The quantities for Drilled Pier Walls - Retaining and Floodwalls as shown on the Drawings and included in the bid proposal form, are the final pay quantities, in accordance with Section 9-.1.015, “Final Pay Items”, of the State Specifications.

30.07.07 Payment

Full compensation for furnishing all labor, materials, tools, equipment, and incidentals, and for doing all the work required to construct Drilled Pier Walls - Retaining and Floodwalls including all drilled piers, structure excavation, structure backfill, structure drainage, structural concrete and bar reinforcing steel complete, in place as shown on the Drawings, as specified in these Specifications, and as directed by the Engineer, shall be included in the unit price bid per square foot for DRILLED PIER WALLS – RETAINING AND FLOOD WALLS – Bid Item No. 41 and Bid Additive Item Nos. 106 and 141 if/when included in the awarded project by the District.

Full compensation for furnishing all labor, materials, tools, equipment and incidentals and for doing all work required for installing chain link fence complete in place, as shown on the Drawings, as specified in these Specifications, and as directed by the Engineer, shall be included in the unit price bid per linear foot for TYPE CL-3.5 BLACK VINYL COATED FENCE, Bid Item No. 32 and Bid Additive Item Nos. 99, and 135, if/when included in the awarded project by the District, and no separate payment shall be made therefore.

Full compensation for furnishing all labor, materials, tools, equipment and incidentals and for doing all work required for installing chain link fence complete in place, as shown on the Drawings, as specified in these Specifications, and as directed by the Engineer, shall be included in the unit price bid per linear foot for TYPE CL-6 BLACK VINYL COATED FENCE, Bid Item No. 33 and Bid Additive Item Nos. 100 and 136 if/when included in the awarded project by the District, and no separate payment shall be made therefore.

Full compensation for furnishing all labor, materials, tools, equipment and incidentals, and for doing all work required for single and double swing chain link fence and gates complete in place, as shown on the Drawings, as specified in these Specifications, and as directed by the Engineer shall be included in the unit price bid per each for TYPE CL-3.5 AND TYPE CL-6 SINGLE SWING GATE, Bid Item No. 36 and Bid Additive Item Nos. 102 and 138 if/when included in the awarded project by the District, and no separate payment shall be made therefore.

Full compensation for furnishing all labor, materials, tools, equipment and incidentals, and for doing all work required for single and double swing chain link fence and gates complete in place, as shown on the Drawings, as specified in these Specifications, and as directed by the Engineer shall be included in the unit price bid per each for TYPE CL-3.5 AND TYPE CL-6 DOUBLE SWING GATE, Bid Item No. 37 and Bid Additive Item Nos. 103 and 139 if/when included in the awarded project by the District, and no separate payment shall be made therefore.

30.08 U–Channel at Jackson Avenue and L-Wall Aprons at Capitol Expressway and Story Road – Bid Item Nos. 42, 107

The Contractor's attention is directed to Article 15.02 "Utilities", 15.03 "Protection of Existing Improvements" and 15.04 "Site Review and Monitoring of Project limits and Vicinity" of these Specifications.

30.08.01 Scope of Work

U-Channel and L-Wall Aprons shall consist of all work and materials necessary to construct the concrete structure as shown on the drawings. Included in this item of work shall be structure excavation, structure backfill, structure drainage, dewatering, shoring (as required), forming, bar reinforcing steel, structural concrete (or air blown mortar), curing, architectural finishes and texturing, site clean-up, and all other miscellaneous items necessary for construction of the U-Channel and L-Wall Aprons as shown on the Drawings, as specified in these Specifications, and as directed by the Engineer.

30.08.02 Materials

The structures shall be constructed with Class 1 structural concrete or air blown mortar in accordance with Article 29.01, "Structural Concrete", Article 29.03 "Air Blown Mortar-Shotcrete", of these Specifications.

Permeable material, filter fabric, geotextile fabric and structure drainage shall be installed in accordance with Article 23.08, "Geotextile Fabric" and Article 23.09, "Structural Drainage", of these Specifications.

Form liner shall be in accordance with Article 29.06.02, "Architectural Texturing".

Weep holes shall be in accordance with Section 51-1.15, "Drains in Walls", of the State Specifications.

Chain link fence and gates shall be black vinyl coated and shall conform to the provisions in, Article 28.02 "CL–3.5 and CL-6 Chain Link Fence and Galvanized Gap Fence", and Article 28.06 "Single and Double Swing Gates", of these Specifications.

30.08.03 Placement

The Contractor shall keep the construction site dewatered and free of standing water or excessively muddy conditions in accordance with Article 22.04, "Control of Water," of these Specifications.

The Contractor shall perform structure excavation and structure backfill in accordance with Article 23.04, "Structural Excavation," and Article 23.05, "Structural Backfill," of these Specifications.

Shoring, as required, shall be in accordance with Article 23.10, "Shoring," of these Specifications.

30.08.04 Testing

Testing for the U-Channel and L-Wall Aprons shall be in accordance with Article 29.01, "Structural Concrete," of these Specifications.

30.08.05 Submittals

Submittals for U-Channel and L-Wall Aprons shall be in accordance with Article 29.01, "Structural Concrete," of these Specifications.

30.08.06 Measurements

Measurement for the U-Channel and L-Wall Aprons will be measured by square foot from the top of foundation slab to the top of the wall and in conformance with the dimensions shown on the Drawings or such other dimensions as may be ordered in writing by the Engineer.

The quantities for the U-Channel and L-Wall Aprons, shall be determined from the drawings and be included in the bid proposal form, are the final pay quantities, in accordance with Section 9-1.015, "Final Pay Items", of the State Specifications.

30.08.07 Payment

Full compensation for furnishing all labor, materials, tools, equipment, and incidentals, and for doing all work required to construct the U-Channel and L-Wall Aprons including structure excavation, structure backfill, structure drainage, dewatering, shoring (as required), forming, bar reinforcing steel, structural concrete (or air blown mortar), curing, site cleanup, and other miscellaneous items necessary for construction of the U-Channel and L-Wall Aprons complete, in place, as shown on the Drawings, as specified in these Specifications and as directed by the Engineer, shall be included in the unit price bid per square foot for U-CHANNEL AT JACKSON AVENUE and L-WALL APRONS AT CAPITOL EXPRESSWAY AND STORY ROAD, Bid Item No. 42 and Bid Additive Item No. 107, if/when included in the awarded project by the District.

Full compensation for furnishing all labor, materials, tools, equipment and incidentals and for doing all work required for installing chain link fence complete

in place, as shown on the Drawings, as specified in these Specifications, and as directed by the Engineer, shall be included in the unit price bid per linear foot for TYPE CL-3.5 BLACK VINYL COATED FENCE, Bid Item No. 32 and Bid Additive Item Nos. 69, 99, and 135, if/when included in the awarded project by the District, and no separate payment shall be made therefore.

Full compensation for furnishing all labor, materials, tools, equipment and incidentals and for doing all work required for installing chain link fence complete in place, as shown on the Drawings, as specified in these Specifications, and as directed by the Engineer, shall be included in the unit price bid per linear foot for TYPE CL-6 BLACK VINYL COATED FENCE, Bid Item No. 33 and Bid Additive Item Nos. 100 and 136 if/when included in the awarded project by the District, and no separate payment shall be made therefore.

Full compensation for furnishing all labor, materials, tools, equipment and incidentals, and for doing all work required for single and double swing chain link fence and gates complete in place, as shown on the Drawings, as specified in these Specifications, and as directed by the Engineer shall be included in the unit price bid per each for TYPE CL-3.5 AND TYPE CL-6 SINGLE SWING GATE, Bid Item No. 36 and Bid Additive Item Nos. 102 and 138 if/when included in the awarded project by the District, and no separate payment shall be made therefore.

Full compensation for furnishing all labor, materials, tools, equipment and incidentals, and for doing all work required for single and double swing chain link fence and gates complete in place, as shown on the Drawings, as specified in these Specifications, and as directed by the Engineer shall be included in the unit price bid per each for TYPE CL-3.5 AND TYPE CL-6 DOUBLE SWING GATE, Bid Item No. 37 and Bid Additive Item Nos. 103 and 139 if/when included in the awarded project by the District, and no separate payment shall be made therefore.

30.09 Access Ramp Slabs and Apron Slabs – Bid Item Nos. 43, 108, 142

The Contractor's attention is directed to Article 15.02 "Utilities", 15.03 "Protection of Existing Improvements" and 15.04 "Site Review and Monitoring of Project limits and Vicinity" of these Specifications.

30.09.01 Scope of Work

Access Ramp Slabs and Apron Slabs shall consist of all work and materials necessary to construct the concrete access ramp slabs and the concrete apron slabs both with integral cut-off wall(s) where shown on the Drawings. Included in this item of work shall be structure excavation, structure backfill, structure drainage, dewatering, shoring (as required), forming, bar reinforcing steel, structural concrete (or air blown mortar), curing, and all other miscellaneous items required

for construction of Access Ramp Slabs and Apron Slabs, as shown on the Drawings, as specified in these Specifications and as directed by the Engineer.

30.09.02 Materials

All concrete work shall be constructed with Class 1 structural concrete or air blown mortar in conformance with Article 29.01, "Structural Concrete," and Article 28.03, "Air Blown Mortar," of these Specifications.

Permeable material, filter fabric, geotextile fabric and structure drainage shall be installed in accordance with Article 23.08, "Geotextile Fabric," and Article 23.09, "Structural Drainage," of these Specifications.

30.09.03 Placement

The Contractor shall keep the construction site dewatered and free of standing water or excessively muddy conditions in accordance with Article 22.04, "Control of Water," of these Specifications.

The Contractor shall perform structure excavation and structure backfill in accordance with Article 23.04, "Structural Excavation," and Article 23.05, "Structural Backfill," of these Specifications.

Shoring, as required, shall be in accordance with Article 23.10, "Shoring," of these Specifications.

30.09.04 Testing

Testing for the Access Ramp Slabs and apron Slabs shall be in accordance with Article 29.01, "Structural Concrete," of these Specifications.

30.09.05 Submittals

Submittals for the Access Ramp Slabs and Apron Slabs shall be in accordance with Article 29.01, "Structural Concrete," of these Specifications.

30.09.06 Measurement

Measurement for the Access Ramp Slabs and Apron Slabs shall be per square foot of surface area as computed from the neat line dimensions shown on the Drawings. The Quantities for the Access Ramp Slabs and Apron Slabs shall be determined from the drawings and included in the bid proposal form are the final pay quantities per provisions of Section 9-1.015, "Final Pay Items", of the State Specifications.

30.09.07 Payment

Full compensation for furnishing all labor, materials, tools, equipment and incidentals for doing all work required to construct the Access Ramp Slabs and Apron Slabs, including structure excavation, structure backfill, structure drainage, dewatering, shoring, (as required), forming, bar reinforcing steel, structural concrete (or air blown mortar), curing, site clean-up, and other miscellaneous items required for construction of the Access Ramp Slabs and Apron Slabs complete, in place, as shown on the Drawings, as specified in these Specifications and as directed by the Engineer, shall be included in the unit price bid per square foot for ACCESS RAMP SLABS and APRON SLABS, No. 43 and Bid Additive Item Nos. 108 and 142 if/when included in the awarded project by the District.

30.10 Cantilever Retaining Wall at Access Ramps – Bid Item Nos. 44, 109, 143

The Contractor's attention is directed to Article 15.02 "Utilities", 15.03 "Protection of Existing Improvements" and 15.04 "Site Review and Monitoring of Project limits and Vicinity" of these Specifications.

30.10.01 Scope of Work

Cantilever Retaining Walls shall consist of all labor, equipment, and materials necessary to construct concrete Cantilever Retaining Walls. Included in this item of work shall be structure excavation, structure backfill, CIDH piles, structure drainage, dewatering, shoring (as required), forming, bar reinforcing steel, structural concrete (or air blown mortar), architectural texturing, curing, site clean-up, and all other miscellaneous items necessary for construction of the Cantilever Retaining as shown on the Drawings, as specified in these specifications, and as directed by the Engineer.

The drilled concrete piers shall conform to provisions in Article 30.12, "Cast-in-Drilled Hole Concrete Piers" of these Specifications.

Concrete Ramp Slabs and Concrete Channel Apron Slabs shall not be considered as included in this scope of work.

30.10.02 Materials

The structures shall be constructed with Class 1 structural concrete or air blown mortar in conformance with Article 29.01, "Structural Concrete," and Article 29.03, "Air Blown Mortar," of these Specifications.

Geotextile fabric and structure drainage shall be installed in accordance with Article 23.08, "Geotextile Fabric," and Article 23.09, "Structural Drainage," of these Specifications.

Pervious Backfill Material shall conform to the provisions in Section 68-1.025, "Permeable Material", of the State Specifications.

Weep Holes shall conform to the provisions in Section 51-1.15, "Drains in Walls", of the State Specifications.

Form liner shall be in accordance with Article 29.06.02, "Architectural Texturing".

Chain link fence and gates shall be black vinyl coated and shall conform to the provisions in, Article 28.02 "CL–3.5 and CL-6 Chain Link Fence and Galvanized Gap Fence", and Article 28.06 "Single and Double Swing Gates", of these Specifications.

30.10.03 Placement

The Contractor shall keep the construction site dewatered and free of standing water or excessively muddy conditions in accordance with Article 22.04, "Control of Water," of these Specifications.

The Contractor shall perform structure excavation and structure backfill in accordance with Article 23.04, "Structural Excavation," and Article 23.05, "Structural Backfill," of these Specifications.

Shoring, as required, shall be in accordance with Article 23.10, "Shoring," of these Specifications.

30.10.04 Testing

Testing for the Cantilever Retaining Wall shall be in accordance with Article 29.01, "Structural Concrete," of these Specifications.

30.10.05 Submittals

Submittals for the Cantilever Retaining Wall shall be in accordance with Article 29.01, "Structural Concrete," of these Specifications.

30.10.06 Measurements

Cantilever Retaining Walls will be measured by the square foot from the top of footing to the top of the wall and in conformance with the dimensions shown on

the Drawings or such other dimensions as may be ordered in writing by the Engineer.

The quantities for the Cantilever Retaining Walls shall be determined from the drawings and on the Bid Proposal Forms, are the final pay quantities, in accordance with Section 9-1.015, “Final Pay Items”, of the State Specifications.

30.10.07 Payment

Full compensation for furnishing all labor, materials, tools, equipment and incidentals for doing all work involved in constructing the Cantilever Retaining Wall Nos. 1 through 7, including structure excavation, structure backfill, structural drainage, dewatering, shoring (as required), forming, bar reinforcing steel, structural concrete (or air blown mortar), curing, site cleanup, and other miscellaneous items necessary for construction of the Cantilever Retaining Walls complete, in place, as shown on the Drawings, as specified in these Specifications and as directed by the Engineer, shall be included in the unit price bid per square foot for CANTILEVER RETAINING WALL AT ACCESS RAMPS, Bid Item No. 44 and Bid Additive Item Nos. 109 and 143 if/when included in the awarded project by the District.

Full compensation for furnishing all labor, materials, tools, equipment and incidentals and for doing all work required for installing chain link fence complete in place, as shown on the Drawings, as specified in these Specifications, and as directed by the Engineer, shall be included in the unit price bid per linear foot for TYPE CL-3.5 BLACK VINYL COATED FENCE, Bid Item No. 32 and Bid Additive Item Nos. 69, 99, and 135, if/when included in the awarded project by the District, and no separate payment shall be made therefore.

Full compensation for furnishing all labor, materials, tools, equipment and incidentals and for doing all work required for installing chain link fence complete in place, as shown on the Drawings, as specified in these Specifications, and as directed by the Engineer, shall be included in the unit price bid per linear foot for TYPE CL-6 BLACK VINYL COATED FENCE, Bid Item No. 33 and Bid Additive Item Nos. 100 and 136 if/when included in the awarded project by the District, and no separate payment shall be made therefore.

Full compensation for furnishing all labor, materials, tools, equipment and incidentals, and for doing all work required for single and double swing chain link fence and gates complete in place, as shown on the Drawings, as specified in these Specifications, and as directed by the Engineer shall be included in the unit price bid per each for TYPE CL-3.5 AND TYPE CL-6 SINGLE SWING GATE, Bid Item No. 36 and Bid Additive Item Nos. 102 and 138 if/when included in the awarded project by the District, and no separate payment shall be made therefore.

Full compensation for furnishing all labor, materials, tools, equipment and incidentals, and for doing all work required for single and double swing chain link fence and gates complete in place, as shown on the Drawings, as specified in these Specifications, and as directed by the Engineer shall be included in the unit price bid per each for TYPE CL-3.5 AND TYPE CL-6 DOUBLE SWING GATE, Bid Item No. 37 and Bid Additive Item Nos. 103 and 139 if/when included in the awarded project by the District, and no separate payment shall be made therefore.

30.11 Soldier Pile Retaining Walls – Bid Item Nos. 45, 73, 110, 144

The Contractor's attention is directed to Article 15.02 "Utilities", 15.03 "Protection of Existing Improvements" and 15.04 "Site Review and Monitoring of Project limits and Vicinity" of these Specifications.

30.11.01 Scope of Work

Soldier Pile Retaining Walls shall consist of all work and materials necessary to construct retaining walls consisting of reinforced air-blown/shotcrete concrete stem walls supported on steel wide flange soldier piles and cast-in-place drilled concrete piers. Included in this item of work shall be structure excavation, structure backfill, steel wide flanges, welded studs, wood lagging, forms, bar reinforcing steel, concrete, architectural finishes and texturing, curing, permeable material, manufactured chimney drainage system with discharge weep hole and site clean-up, and all other miscellaneous items necessary for construction of Soldier Pile Retaining Walls as shown on the drawings, as specified in these Specifications, and as directed by the Engineer.

Soldier Pile Retaining Walls shall conform to the provisions in Sections 19, "Earthwork"; 49, 'Piling"; 52, "Reinforcement"; and 90, "Portland Cement Concrete", of the State Specifications and Article 29.02 "Lean Concrete"; Article 29.03, "Air-Blown Mortar – Shotcrete", Article 30.12, "Cast-in-Drilled-Hole Concrete Piles," of these Specifications.

30.11.02 Materials

Concrete for cast-in-drilled-hole concrete piles shall conform to the provisions in Section 90, "Portland Cement Concrete", of the State Specifications and these Specifications.

Lean Concrete for cast-in-drilled-hole concrete piles shall conform to the provisions in Article 29.02, "Lean Concrete" of these Specifications.

Reinforcing bars shall conform to ASTM Designation: A 706.

Welded Headed Studs shall conform to ASTM Designation: A 108

Steel Wide Flange Soldier Piles shall conform to ASTM Designation: A 992.

Timber Lagging shall conform to Douglas Fir No1 full dimension – Pressure Treated. Pressure treated lumber shall conform to Section 58, "Preservative Treatment of Lumber, Timber and Piling", of the State Specifications.

Category Designations: UCAB – Ground Contact Heavy Duty
Preservative: ACQ or approved equal.
Retention level of 0.60

Expansion joint filler shall conform to ASTM Designation: D 1751 or ASTM Designation: D 2000 2AA-805 and Article 29.04, "Joints, Waterstops, and Sealants", of these Specifications.

Pervious Backfill Material shall conform to the provisions in Section 68-1.025, "Permeable Material", of the State Specifications.

Chimney drainage system with discharge weep holes shall be as manufactured by AWD, American Wick Drain, 1209 Airport Road, Monroe, NC 28110, phone 1-704-238-9200, or approved equal.

Chain link fence and gates shall be black vinyl coated and shall conform to the provisions in, Article 28.02, "CL–3.5 and CL-6 Chain Link Fence", and Galvanized Gap Fence", and Article 28.06 "Single and Double Swing Gates", of these Specifications.

30.11.03 Drilled Holes

Holes for steel soldier piles shall be drilled into natural foundation materials at the location shown on the Drawings and shall conform to Section 49, "Piling," of the State Specifications and these special provisions.

Drilled holes shall be accurately located and shall be straight and true. When the piles are plumbed and aligned, the steel piles shall be at least one inch clear of the sides of the hole for the full length of the hole to be filled with concrete backfill and lean concrete backfill. Holes that do not provide the clearance around steel piles shall be reamed or enlarged at the Contractor's expense.

Temporary casings or tremie seals shall be furnished and placed where necessary to control water or to prevent caving of the hole.

Loose materials existing at the bottom of the hole after drilling operations have been completed shall be removed before placing the pile.

Drilling mud or chemical stabilizers shall not be used. Surface water shall not be permitted to enter the hole and all water in the hole shall be removed before placing concrete therein.

Casing, if used in drilling operations, shall be removed from the hole as concrete is placed therein. The bottom of the casing shall be maintained not more than 5 feet nor less than one foot below the top of the concrete during casing withdrawal and concrete placing operations. Separation of the concrete during withdrawal operations shall be avoided by hammering or otherwise vibrating the casing. The methods used to withdraw temporary casings shall preclude contamination of the concrete and commingling of the soil and concrete or of any ground water and concrete.

30.11.04 Placement

Concrete construction shall conform to Article 29.01 “Structural Concrete”, of these Specifications and as shown on the Drawings.

Reinforcement shall be in accordance with the Article 29.01, “Structural Concrete”, of these Specifications and as shown on the drawings.

Steel soldier pies shall be installed as shown on Drawings.

Welded head studs shall be installed per American Welding Society, AWS D1.1 latest edition.

Splices in vertical reinforcement will not be allowed.

Chimney drainage system with discharge weep holes shall be installed per manufacturer’s specifications.
Expansions and control joints shall be accordance with the Article 29.04, “Joints, Waterstops, and Sealants”, of these Specifications and as shown on the Drawings.
Curing shall be in accordance with the Article 29.01, Structural Concrete of these Specifications.

Finish shall be in accordance with the Article 29.06, “Architectural Finish”, of these Specifications.

30.11.05 Testing

Testing for concrete components of Soldier Pile Retaining Walls shall be in accordance with Article 29.01 "Structural Concrete," Article 29.02, “Lean Concrete,” and Article 29.03, “Air-Blown Mortar – Shotcrete,” of these Specifications.

Testing for welded headed studs shall be in accordance with AWS standards.

30.11.06 Submittals

Submittal for concrete components of Soldier Pile Retaining Walls shall be in accordance with Article 29.01 "Structural Concrete," Article 29.02, “Lean Concrete,” and Article 29.03, “Air-Blown Mortar – Shotcrete,” of these Specifications.

The Contractor shall submit 4 sets of elevation and plan layout drawings to the Engineer, as provided in Section 5-1.02, “Plans and Working Drawings”, of the State Specifications. The drawings shall be to scale and shall show the proposed top and bottom elevation lines. The top and bottom elevation lines shown on the Drawings are minimums and they shall be fully contained in the proposed layout drawings. The drawings shall include, within the limits shown on the Drawings, the panel sizes, pile spacing, footing steps, aesthetic features, and locations of expansion joints. The Contractor shall allow two weeks, after complete drawings are submitted, for review.

30.11.07 Measurements

Soldier Pile Retaining Walls will be measured by the square foot from top of pile cap to top of wall and from end to end along the centerline of the top of the installed floodwall.

The quantities for Soldier Pile Retaining Walls shall be determined from the drawings and included in the bid proposal form, are the final pay quantities, in accordance with Section 9-.1.015, “Final Pay Items”, of the State Specifications.

30.11.08 Payment

Full compensation for furnishing all labor, materials, tools, equipment, and incidentals, and for doing all the work required to construct Soldier Pile Retaining Walls including all drilled piers, structure excavation, structure backfill, structure drainage, steel wide flanges, welded studs, lagging, structure concrete and bar reinforcing steel complete, in place, as shown on the Drawings, as specified in these Specifications, and as directed by the Engineer, shall be included in the unit

price bid per square foot for SOLDIER PILE RETAINING WALLS – Bid Item No. 45 and Bid Additive Item Nos. 73, 110 and 144 if/when included in the awarded project by the District.

Full compensation for furnishing all labor, materials, tools, equipment and incidentals and for doing all work required for installing chain link fence complete in place, as shown on the Drawings, as specified in these Specifications, and as directed by the Engineer, shall be included in the unit price bid per linear foot for TYPE CL-3.5 BLACK VINYL COATED FENCE, Bid Item No. 32 and Bid Additive Item Nos. 69, 99, and 135, if/when included in the awarded project by the District, and no separate payment shall be made therefore.

Full compensation for furnishing all labor, materials, tools, equipment and incidentals and for doing all work required for installing chain link fence complete in place, as shown on the Drawings, as specified in these Specifications, and as directed by the Engineer, shall be included in the unit price bid per linear foot for TYPE CL-6 BLACK VINYL COATED FENCE, Bid Item No. 33 and Bid Additive Item Nos. 100 and 136 if/when included in the awarded project by the District, and no separate payment shall be made therefore.

Full compensation for furnishing all labor, materials, tools, equipment and incidentals, and for doing all work required for single and double swing chain link fence and gates complete in place, as shown on the Drawings, as specified in these Specifications, and as directed by the Engineer shall be included in the unit price bid per each for TYPE CL-3.5 AND TYPE CL-6 SINGLE SWING GATE, Bid Item No. 36 and Bid Additive Item Nos. 102 and 138 if/when included in the awarded project by the District, and no separate payment shall be made therefore.

Full compensation for furnishing all labor, materials, tools, equipment and incidentals, and for doing all work required for single and double swing chain link fence and gates complete in place, as shown on the Drawings, as specified in these Specifications, and as directed by the Engineer shall be included in the unit price bid per each for TYPE CL-3.5 AND TYPE CL-6 DOUBLE SWING GATE, Bid Item No. 37 and Bid Additive Item Nos. 103 and 139 if/when included in the awarded project by the District, and no separate payment shall be made therefore.

30.12 Cast-in-Drilled-Hole Concrete Piles

The Contractor's attention is directed to Article 15.02 "Utilities", 15.03 "Protection of Existing Improvements" and 15.04 "Site Review and Monitoring of Project limits and Vicinity" of these Specifications.

30.12.01 Scope of Work

Cast-in-drilled-hole (CIDH) shall consist of all labor, equipment, and material necessary to construct CIDH concrete piles as shown on the drawings, as specified in these specifications and as directed by the Engineer.

Cast-in-drilled-hole (CIDH) concrete piling shall conform to the provisions in Section 49-4, "Cast-In-Place Concrete Piles," of the State Specifications and these special provisions.

The provisions of "Welding" of these special provisions shall not apply to temporary steel casings.

30.12.02 Materials

Concrete
Concrete deposited under slurry shall have a nominal slump equal to or greater than 7 inches, contain not less than 675 pounds of cementitious material per cubic yard, and be proportioned to prevent excessive bleed water and segregation. The nominal and maximum slump and penetration requirements in Section 90-6.06, "Amount of Water and Penetration," of the State Specifications shall not apply.

Aggregate Grading
The combined aggregate grading shall be either the 1-inch maximum grading, the 1/2-inch maximum grading, or the 3/8-inch maximum grading and shall conform to the requirements in Section 90-3, "Aggregate Gradings," of the State specifications.

When concrete is placed under slurry, the combined aggregate grading shall be either the 1/2-inch maximum grading or the 3/8-inch maximum grading and shall conform to the requirements in Section 90-3, "Aggregate Gradings," of the State specifications.

Slurry
Mineral Slurry
Mineral slurry shall be mixed and thoroughly hydrated in slurry tanks, and slurry shall be sampled from the slurry tanks and tested before placement in the drilled hole.
Slurry shall be re-circulated or continuously agitated in the drilled hole to maintain the specified properties.

Recirculation shall include removal of drill cuttings from the slurry before discharging the slurry back into the drilled hole. When recirculation is used, the slurry shall be sampled and tested at least every 2 hours after beginning its use

until tests show that the samples taken from the slurry tank and from near the bottom of the hole have consistent specified properties. Subsequently, slurry shall be sampled at least twice per shift as long as the specified properties remain consistent.

Slurry that is not re-circulated in the drilled hole shall be sampled and tested at least every 2 hours after beginning its use. The slurry shall be sampled mid-height and near the bottom of the hole. Slurry shall be re-circulated when tests show that the samples taken from mid-height and near the bottom of the hole do not have consistent specified properties.

Slurry shall also be sampled and tested before final cleaning of the bottom of the hole and again just before placing concrete. Samples shall be taken from mid-height and near the bottom of the hole. Cleaning of the bottom of the hole and placement of the concrete shall not start until tests show that the samples taken from mid-height and near the bottom of the hole have consistent specified properties.

Mineral slurry shall be tested for conformance to the requirements shown in the following table:

MINERAL SLURRY		
PROPERTY	REQUIREMENT	TEST
Density (pcf) - before placement in the drilled hole - during drilling - before final cleaning - immediately before placing concrete	64.3* to 69.1* 64.3* to 75.0*	Mud Weight (Density) API 13B-1 Section 1
Viscosity (seconds/quart) bentonite attapulgite	28 to 50 28 to 40	Marsh Funnel and Cup API 13B-1 Section 2.2
pH	8 to 10.5	Glass Electrode pH Meter or pH Paper
Sand Content (percent) - before final cleaning - immediately before placing concrete	less than or equal to 4.0	Sand API 13B-1 Section 5
*When approved by the Engineer, slurry may be used in salt water, and the allowable densities may be increased up to 2 pcf. Slurry temperature shall be at least 40°F when tested.		

Any caked slurry on the sides or bottom of hole shall be removed before placing reinforcement. If concrete is not placed immediately after placing reinforcement, the reinforcement shall be removed and cleaned of slurry, the sides of the drilled hole cleaned of caked slurry, and the reinforcement again placed in the hole for concrete placement.

Synthetic Slurry

Synthetic slurries shall be used in conformance with the manufacturer's recommendations and these special provisions. The following synthetic slurries may be used:

PRODUCT	MANUFACTURER
SlurryPro CDP	KB Technologies Ltd. 3648 FM 1960 West Suite 107 Houston, TX 77068 (800) 525-5237
Super Mud	PDS Company c/o Champion Equipment Company 8140 East Rosecrans Ave. Paramount, CA 90723 (562) 634-8180
Shore Pac GCV	CETCO Drilling Products Group 1350 West Shure Drive Arlington Heights, IL 60004 (847) 392-5800
Novagel Polymer	Geo-Tech Drilling Fluids 220 N. Zapata Hwy, Suite 11A Laredo, TX 78043 (210) 587-4758

Inclusion of a synthetic slurry on the above list may be obtained by meeting the Department's requirements for synthetic slurries. The requirements can be obtained from the Offices of_Structures Design, P.O. Box 168041, MS# 9-4/11G, Sacramento, CA 95816-8041.

Synthetic slurries listed may not be appropriate for a given site.

Synthetic slurries shall not be used in holes drilled in primarily soft or very soft cohesive soils as determined by the Engineer.

A manufacturer's representative, as approved by the Engineer, shall provide technical assistance for the use of their product, shall be at the site before introduction of the synthetic slurry into a drilled hole, and shall remain at the site until released by the Engineer.

Synthetic slurries shall be sampled and tested at both mid-height and near the bottom of the drilled hole. Samples shall be taken and tested during drilling as necessary to verify the control of the properties of the slurry. Samples shall be taken and tested when drilling is complete, but before final cleaning of the bottom of the hole. When samples are in conformance with the requirements shown in the following tables for each slurry product, the bottom of the hole shall be cleaned

and any loose or settled material removed. Samples shall be obtained and tested after final cleaning and immediately before placing concrete.

SlurryPro CDP synthetic slurries shall be tested for conformance to the requirements shown in the following table:

SLURRYPRO CDP KB Technologies Ltd.		
PROPERTY	REQUIREMENT	TEST
Density (pcf) - during drilling - before final cleaning - just before placing concrete	 less than or equal to 67.0* less than or equal to 64.0*	Mud Weight (Density) API 13B-1 Section 1
Viscosity (seconds/quart) - during drilling -before final cleaning - just before placing concrete	 50 to 120 less than or equal to 70	Marsh Funnel and Cup API 13B-1 Section 2.2
pH	6 to 11.5	Glass Electrode pH Meter or pH Paper
Sand Content (percent) - before final cleaning - just before placing concrete	 less than or equal to 0.5	Sand API 13B-1 Section 5
*When approved by the Engineer, slurry may be used in salt water, and the allowable densities may be increased up to 2 pcf. Slurry temperature shall be at least 40°F when tested.		

Super Mud synthetic slurries shall be tested for conformance to the requirements shown in the following table:

SUPER MUD PDS Company		
PROPERTY	REQUIREMENT	TEST
Density (pcf) - before final cleaning - just before placing concrete	less than or equal to 64.0*	Mud Weight (Density) API 13B-1 Section 1
Viscosity (seconds/quart) - during drilling - before final cleaning - just before placing concrete	32 to 60 less than or equal to 60	Marsh Funnel and Cup API 13B-1 Section 2.2
pH	8 to 10.0	Glass Electrode pH Meter or pH Paper
Sand Content (percent) - before final cleaning -just before placing concrete	less than or equal to 0.5	Sand API 13B-1 Section 5
*When approved by the Engineer, slurry may be used in salt water, and the allowable densities may be increased up to 2 pcf. Slurry temperature shall be at least 40°F when tested.		

Shore Pac GCV synthetic slurries shall be tested for conformance to the requirements shown in the following table:

Shore Pac GCV CETCO Drilling Products Group		
PROPERTY	REQUIREMENT	TEST
Density (pcf) - before final cleaning - just before placing concrete	less than or equal to 64.0*	Mud Weight (Density) API 13B-1 Section 1
Viscosity (seconds/quart) - during drilling - before final cleaning - just before placing concrete	33 to 74 less than or equal to 57	Marsh Funnel and Cup API 13B-1 Section 2.2
pH	8.0 to 11.0	Glass Electrode pH Meter or pH Paper
Sand Content (percent) - before final cleaning -just before placing concrete	less than or equal to 0.5	Sand API 13B-1 Section 5
*When approved by the Engineer, slurry may be used in salt water, and the allowable densities may be increased up to 2 pcf. Slurry temperature shall be at least 40°F when tested.		

Novagel Polymer synthetic slurries shall be tested for conformance to the requirements shown in the following table:

NOVAGEL POLYMER Geo-Tech Drilling Fluids		
PROPERTY	REQUIREMENT	TEST
Density (pcf) - during drilling - before final cleaning - just before placing concrete	 less than or equal to 67.0* less than or equal to 64.0*	Mud Weight (Density) API 13B-1 Section 1
Viscosity (seconds/quart) - during drilling - before final cleaning - just before placing concrete	 45 to 104 less than or equal to 104	Marsh Funnel and Cup API 13B-1 Section 2.2
pH	6.0 to 11.5	Glass Electrode pH Meter or pH Paper
Sand Content (percent) - before final cleaning -just before placing concrete	 less than or equal to 0.5	Sand API 13B-1 Section 5
*When approved by the Engineer, slurry may be used in salt water, and the allowable densities may be increased up to 2 pcf. Slurry temperature shall be at least 40°F when tested.		

Water Slurry

At the option of the Contractor, water may be used as slurry when casing is used for the entire length of the drilled hole.

Water slurry shall be tested for conformance to the requirements shown in the following table:

WATER SLURRY		
PROPERTY	REQUIREMENT	TEST
Density (pcf) - before final cleaning - just before placing concrete	63.5*	Mud Weight (Density) API 13B-1 Section 1
Sand Content (percent) - before final cleaning -just before placing concrete	less than or equal to 0.5	Sand API 13B-1 Section 5
*When approved by the Engineer, salt water slurry may be used and the allowable densities may be increased up to 2 pcf.		

30.12.03 Construction

General

CIDH concrete piling 24 inches in diameter or larger may be constructed by excavation and depositing concrete under slurry.

Portions of CIDH concrete piling shown on the Drawings to be formed shall be formed and finished in conformance with the provisions for concrete structures in Section 51, "Concrete Structures," of the State specifications.

Placing Concrete

Concrete deposited under slurry shall be carefully placed in a compact, monolithic mass and by a method that will prevent washing of the concrete. Concrete deposited under slurry need not be vibrated. Placing concrete shall be a continuous operation lasting not more than the time required for each concrete placing operation at each pile, as submitted in the placing plan, unless otherwise approved in writing by the Engineer. Concrete shall be placed with concrete

pumps and delivery tube system of adequate number and size to complete the placing of concrete in the time specified. The delivery tube system shall consist of one of the following:

A. A tremie tube or tubes, each of which are at least 10 inches in diameter, fed by one or more concrete pumps

B. One or more concrete pump tubes, each fed by a single concrete pump.

The delivery tube system shall consist of watertight tubes with sufficient rigidity to keep the ends always in the mass of concrete placed. If only one delivery tube is utilized to place the concrete, the tube shall be placed near the center of the drilled hole. Multiple tubes shall be uniformly spaced in the hole. Internal bracing for the steel reinforcing cage shall accommodate the delivery tube system. Tremies shall not be used for piles without space for a 10-inch tube.

Spillage of concrete into the slurry during concrete placing operations shall not be allowed. Delivery tubes shall be capped with a watertight cap, or plugged above the slurry level with a good quality, tight fitting, moving plug that will expel the slurry from the tube as the tube is charged with concrete. The cap or plug shall be designed to be released as the tube is charged. The pump discharge or tremie tube shall extend to the bottom of the hole before charging the tube with concrete. After charging the delivery tube system with concrete, the flow of concrete through a tube shall be induced by slightly raising the discharge end. During concrete placement, the tip of the delivery tube shall be maintained as follows to prevent reentry of the slurry into the tube. Until at least 10 feet of concrete has been placed, the tip of the delivery tube shall be within 6 inches of the bottom of the drilled hole, and then the embedment of the tip shall be maintained at least 10 feet below the top surface of the concrete. Rapid raising or lowering of the delivery tube shall not be permitted. If the seal is lost or the delivery tube becomes plugged and must be removed, the tube shall be withdrawn, the tube cleaned, the tip of the tube capped to prevent entrance of the slurry, and the operation restarted by pushing the capped tube 10 feet into the concrete and then reinitiating the flow of concrete.

When slurry is used, a fully operational standby concrete pump, adequate to complete the work in the time specified, shall be provided at the site during concrete placement. The slurry level shall be maintained 10 feet above the piezometric head or within 12 inches of the top of the drilled hole, whichever is higher.

A log of concrete placement for each drilled hole shall be maintained by the Contractor when concrete is deposited under slurry. The log shall show the pile location, tip elevation, dates of excavation and concrete placement, total quantity

of concrete deposited, length and tip elevation of any casing, and details of any hole stabilization method and materials used. The log shall include an 8-1/2" x 11" sized graph of the concrete placed versus depth of hole filled. The graph shall be plotted continuously throughout placing of concrete. The depth of drilled hole filled shall be plotted vertically with the pile tip oriented at the bottom and the quantity of concrete shall be plotted horizontally. Readings shall be made at least at each 5 feet of pile depth, and the time of the reading shall be indicated. The graph shall be labeled with the pile location, tip elevation, cutoff elevation, and the dates of excavation and concrete placement. The log shall be delivered to the Engineer within 1 working day of completion of placing concrete in the pile.

After placing reinforcement and before placing concrete in the drilled hole, if drill cuttings settle out of the slurry, the bottom of the drilled hole shall be cleaned. The Contractor shall verify that the bottom of the drilled hole is clean.

If a temporary casing is used, concrete placed under slurry shall be maintained at a level at least 5 feet above the bottom of the casing. The withdrawal of the casing shall not cause contamination of the concrete with slurry. If slurry is not used, the temporary casing shall not be withdrawn until the concrete head in the casing is greater than the groundwater outside of the casing. This positive concrete head shall be maintained during the withdrawal of the casing.

Material resulting from using slurry shall be disposed of in conformance with the provisions in Section 7-1.13, "Disposal of Material Outside the Highway Right of Way," of the State specifications.

30.12.04 Testing

Concrete Test Batch

Before concrete is deposited under slurry, a concrete test batch shall be produced and delivered to the project under conditions and in time periods similar to those expected during placement of concrete in the piles. Concrete shall be placed in an excavated hole or suitable container of adequate size to allow for testing as specified herein. Depositing of concrete under slurry will not be required. In addition to meeting the specified nominal slump, the concrete test batch shall meet the following requirements:

A. For piles where the time required for each concrete placing operation, as submitted in the placing plan, will be 2 hours or less, the concrete test batch shall demonstrate that the proposed concrete mix design achieves a slump of at least 7 inches after twice that time has elapsed.

B. For piles where the time required for each concrete placing operation, as submitted in the placing plan, will be more than 2 hours, the concrete test batch shall demonstrate that the proposed concrete mix design achieves a slump of at least 7 inches after that time plus 2 hours has elapsed.

The time period shall begin at the start of placement. Concrete shall not be vibrated or agitated during the test period. Slump tests will be performed in conformance with the requirements in California Test 556.

Upon completion of testing, concrete shall be disposed of in conformance with the provisions in Section 7-1.13, "Disposal of Material Outside the Highway Right of Way," of the State specifications.

Acceptance Testing and Mitigation

Vertical inspection pipes for acceptance testing shall be provided in all CIDH concrete piling 24 inches in diameter or larger, except when the holes are dry or when the holes are dewatered without the use of temporary casing in a manner that controls ground water.

The furnishing and placing of inspection pipes shall conform to the following:

A. Inspection pipes shall be Schedule 40 PVC pipe with a nominal inside diameter of 2 inches. Watertight PVC couplers are permitted to facilitate pipe lengths in excess of those which are commercially available. The Contractor shall log the location of the inspection pipe couplers with respect to the plane of pile cut off, and these logs shall be delivered to the Engineer upon completion of the placement of concrete in the drilled hole.

B. Each inspection pipe shall be capped at the bottom and shall extend from 3 feet above the pile cutoff down to the bottom of the reinforcing cage. A temporary top cap or similar means shall be provided to keep the pipes clean before testing. If pile cutoff is below the ground surface or working platform, inspection pipes shall be extended to 3 feet above the ground surface or working platform. Approved covers or railings shall be provided and inspection pipes shall be located as necessary to minimize exposure of testing personnel to potential falling hazards.

C. Inspection pipes shall be completely clean, dry, and unobstructed at the time of testing providing a 2-inch diameter clear opening.

D. The inspection pipes shall be installed in straight alignment, parallel to the main reinforcement, and securely fastened in place to prevent misalignment

during installation of the reinforcement and placing of concrete in the hole. The CIDH concrete piling shall be constructed so that the relative distance of inspection pipes to vertical steel reinforcement shall remain constant.

E. When any changes are made to the tip of CIDH concrete piling, the Contractor shall also extend the inspection pipes to the bottom of the reinforcing cage.

The following additional requirements apply if inspection pipes are not shown on the Drawings:

A. Inspection pipes shall be placed radially around the pile, inside the outermost spiral or hoop reinforcement and no more than 1 inch clear of the outermost spiral or hoop reinforcement.

B. Inspection pipes shall be placed around the pile at a uniform spacing not exceeding 33 inches measured along the circle passing through the centers of inspection pipes. A minimum of 2 inspection pipes per pile shall be used. Inspection pipes shall be placed to provide the maximum diameter circle that passes through the centers of the inspection pipes while maintaining the spacing required herein.

C. Inspection pipes shall be placed a minimum of 3 inches clear of the vertical reinforcement. When the vertical reinforcement configuration does not permit this clearance while achieving radial location requirements, distance to vertical rebar shall be maximized while still maintaining the requirement for radial location.

D. Where the dimensions of the pile reinforcement do not permit inspection pipes to be placed per these requirements, a plan for tube placement shall be submitted to the Engineer for approval in the Pile Placement Plan with a request for deviation before fabricating pile reinforcement.

After placing concrete and before requesting acceptance tests, each inspection pipe shall be tested by the Contractor in the presence of the Engineer by passing a 1-1/4-inch-diameter rigid cylinder 4.5 feet long through the length of pipe. If an inspection pipe fails to pass the 1-1/4-inch-diameter cylinder, the Contractor shall immediately fill all inspection pipes in the pile with water.

For each inspection pipe that does not pass the 1-1/4-inch-diameter cylinder, the Contractor shall core a nominal 2-inch diameter hole through the concrete for the entire length of the pile. Cored holes shall be located as close as possible to the inspection pipes they are replacing and shall be no more than 5 inches clear from the reinforcement.

Coring shall not damage the pile reinforcement. Cored holes shall be made with a double wall core barrel system utilizing a split tube type inner barrel. Coring with a solid type inner barrel will not be allowed. Coring methods and equipment shall provide intact cores for the entire length of the pile. The coring operation shall be logged by an Engineering Geologist or Civil Engineer licensed in the State of California and experienced in core logging. Coring logs shall be in conformance with the Department's "Soil and Rock Logging, Classification, and Presentation Manual." Coring logs shall include Core Recovery (REC), Rock Quality Designation (RQD), locations of breaks, and complete descriptions of inclusions and voids encountered during coring, and shall be delivered to the Engineer upon completion. Concrete cores shall be preserved, identified with the exact location the core was recovered from within the pile, and delivered to the Engineer upon completion. The Engineer will evaluate the portion of the pile represented by the cored hole based on the submitted core logs.
Acceptance tests of the concrete will be made by the Engineer, without cost to the Contractor. Acceptance tests will evaluate the homogeneity of the placed concrete. Tests will include gamma-gamma logging conducted in conformance with California Test 233. The Contractor shall not conduct operations within 25 feet of the gamma-gamma logging operations. The Contractor shall separate reinforcing steel as necessary to allow the Engineer access to the inspection pipes to perform gamma-gamma logging or other acceptance testing. After requesting acceptance tests and providing access to the piles, the Contractor shall allow 20 days for the Engineer to conduct these tests and make determination of acceptance.

Should the Engineer fail to complete these tests within the time allowance, and if in the opinion of the Engineer, the Contractor's controlling operation is delayed or interfered with by reason of the delay in inspection, the delay will be considered a right of way delay as specified in Section 8-1.09, "Right of Way Delays," of the State specifications.

The Engineer may elect to perform additional tests to further evaluate a pile. These tests may include crosshole sonic logging and other means of inspection selected by the Engineer. When the Engineer elects to perform additional tests to further evaluate anomalies for a rejected pile, no time requirement exists for performing these tests. The Contractor may progress with the mitigation plan process without waiting for these supplemental results.

Inspection pipes and cored holes shall be dewatered and filled with grout after notification by the Engineer that the pile is acceptable. Grout shall conform to the provisions in Section 50-1.09, "Bonding and Grouting," of the State specifications. Inspection pipes and holes shall be filled using grout tubes that extend to the bottom of the pipe or hole or into the grout already placed.

If acceptance testing performed by the Engineer determines that a pile does not meet the requirements of the specifications and California Test 233, Part 5C, then that pile will be rejected and all depositing of concrete under slurry or concrete placed using temporary casing for the purpose of controlling groundwater shall be suspended until written changes to the methods of pile construction are approved in writing by the Engineer.

The Engineer will determine whether the rejected pile requires mitigation due to structural, geotechnical, or corrosion concerns. The Engineer will consider the estimated size and location of the anomaly and potential effects upon the design. The Engineer will provide the conclusions of this analysis to the Contractor for development of a mitigation plan, if required. The Contractor shall allow 35 days for the Engineer to determine whether the pile requires mitigation and provide information to the Contractor. Day 1 of the 35 days shall be the 1st day after access has been provided to the Engineer to perform acceptance testing. If additional information is submitted to the Engineer that modifies the size, shape, or nature of the anomaly, the Contractor shall allow 15 additional days for the subsequent analysis.

If the Engineer determines that a rejected pile does not require mitigation, the Contractor may elect to (1) repair the pile per the approved mitigation plan or (2) not repair anomalies found during acceptance testing of that pile. For such unrepaired piles, the Contractor shall pay to the District, $300 per cubic yard for the portion of the pile affected by the anomalies. The volume, in cubic yards, of the portion of the pile affected by the anomalies, shall be calculated as the area of the cross section of the pile affected by each anomaly, in square yards, as determined by the Engineer, multiplied by the distance, in yards, from the top of each anomaly to the specified tip of the pile. If the volume calculated for one anomaly overlaps the volume calculated for additional anomalies within the pile, the calculated volume for the overlap shall only be counted once. In no case shall the amount of the payment to the District for any such pile be less than $300. The District may deduct the amount from any moneys due, or that may become due the Contractor under the contract.

If the Engineer determines that a rejected pile requires mitigation, the Contractor shall submit to the Engineer for approval a mitigation plan for repair, supplementation, or replacement for each rejected CIDH concrete pile conforming to the provisions in Section 5-1.02, "Plans and Working Drawings," of the State specifications. If the Engineer determines that it is not feasible to repair the rejected pile, the Contractor shall not include repair as a means of mitigation and shall proceed with the submittal of a mitigation plan for replacement or supplementation of the rejected pile.

Pile mitigation plans shall include the following:

A. The designation and location of the pile addressed by the mitigation plan.

B. A review of the structural, geotechnical, and corrosion design requirements of the rejected pile.

C. A step by step description of the mitigation work to be performed, including drawings if necessary.

D. An assessment of how the proposed mitigation work will address the structural, geotechnical, and corrosion design requirements of the rejected pile.

E. Methods for preservation or restoration of existing earthen materials.

F. A list of affected facilities, if any, with methods and equipment for protection of these facilities during mitigation.

G. The District assigned contract number, full name of the structure as shown on the contract plans, and the Contractor's (and Subcontractor's if applicable) name on each sheet.

H. A list of materials, with quantity estimates, and personnel, with qualifications, to be used to perform the mitigation work.

I. The seal and signature of an engineer who is licensed as a Civil Engineer by the State of California. This requirement is waived for approved mitigation plans when either of the following conditions are present:
    1. The proposed mitigation will be performed in conformance with the most recent approved version of "ADSC Standard Mitigation Plan 'A' - Basic Repair" without exception or modification.
    2. The Engineer has determined that the rejected pile does not require mitigation due to structural, geotechnical, or corrosion concerns, and the Contractor elects to repair the pile using most recent approved version of "ADSC Standard Mitigation Plan 'B' - Grouting Repair" without exception or modification.

The most recent approved version of the "ADSC Standard Mitigation Plan" is available at: http://www.dot.ca.gov/hq/esc/geotech/ft/adscmitplan.htm

For rejected piles to be repaired, the Contractor shall submit a pile mitigation plan that contains the following additional information:

A. An assessment of the nature and size of the anomalies in the rejected pile.

B. Provisions for access for additional pile testing if required by the Engineer.

For rejected piles to be replaced or supplemented, the Contractor shall submit a pile mitigation plan that contains the following additional information:

A. The proposed location and size of additional piles.

B. Structural details and calculations for any modification to the structure to accommodate the replacement or supplemental piles.

All provisions for CIDH concrete piling shall apply to replacement piles.

The Contractor shall allow the Engineer 20 days to review the mitigation plan after a complete submittal has been received.
Should the Engineer fail to review the complete pile mitigation submittal within the time specified, and if, in the opinion of the Engineer, the Contractor's controlling operation is delayed or interfered with by reason of the delay in reviewing the pile mitigation plan, an extension of time commensurate with the delay in completion of the work thus caused will be granted in conformance with the provisions in Section 8-1.09, "Right of Way Delays," of the State specifications.

When repairs are performed, the Contractor shall submit a mitigation report to the Engineer within 10 days of completion of the repair. This report shall state exactly what repair work was performed and quantify the success of the repairs relative to the submitted mitigation plan. The mitigation report shall be stamped and signed by an engineer that is licensed as a Civil Engineer by the State of California. The mitigation report shall show the District assigned contract number, full name of the structure as shown on the contract plans, and the Contractor (and subcontractor if applicable) name on each sheet. The Engineer will be the sole judge as to whether a mitigation proposal is acceptable, the mitigation efforts are successful, and to whether additional repairs, removal and replacement, or construction of a supplemental foundation is required.

30.12.05 Submittals

Pile Installation Plan

The Contractor shall submit a pile installation plan to the Engineer for approval for all CIDH concrete piling. The pile installation plan shall be submitted at least 15 days before constructing CIDH concrete piling and shall include complete descriptions, details, and supporting calculations for the following:

A. Concrete mix design, certified test data, and trial batch reports.

B. Drilling or coring methods and equipment.

C. Proposed method for casing installation and removal when necessary.

D. Plan view drawing of pile showing reinforcement. Include inspection pipes on the drawing if inspection pipes are required.

E. Methods for placing, positioning, and supporting bar reinforcement.

F. Methods and equipment for determining the depth of concrete and actual and theoretical volume placed, including effects on volume of concrete when any casings are withdrawn.

G. Methods and equipment for verifying that the bottom of the drilled hole is clean before placing concrete.

H. Methods and equipment for preventing upward movement of reinforcement, including the Contractor's means of detecting and measuring upward movement during concrete placement operations.

For concrete placed under slurry, the pile installation plan shall also include complete descriptions, details, and supporting calculations for the following:

A. Concrete batching, delivery, and placing systems, including time schedules and capacities. Time schedules shall include the time required for each concrete placing operation at each pile.

B. Concrete placing rate calculations. When requested by the Engineer, calculations shall be based on the initial pump pressures or static head on the concrete and losses throughout the placing system, including anticipated head of slurry and concrete to be displaced.

C. Suppliers’ test reports on the physical and chemical properties of the slurry and any proposed slurry chemical additives, including Material Safety Data Sheet.

D. Slurry testing equipment and procedures.

E. Methods of removal and disposal of excavation, slurry, and contaminated concrete, including removal rates.

F. Methods and equipment for slurry agitating, recirculating, and cleaning.

30.12.06 Measurement

Cast-In-Drilled-Hole Concrete Piles will not be measured**.**

30.12.07 Payment

Full compensation for furnishing all labor, materials, tools, equipment and incidentals, and for doing all work required for Cast-in-Drilled-Hole Concrete Piles as shown on the Drawings, as specified in these Specifications, and as directed by the Engineer shall be included in the lump sum or unit price bid for the items of work which require Cast-in-Drilled-Hole Concrete Piles, and no separate payment will be made therefore.

30.13 Sanitary Sewer Siphon Manholes

30.13.01 Scope of Work

Sanitary Sewer Siphon Manholes shall consist of all work and materials necessary to construct the manhole structures for the Bore and Jack Siphon at Capitol Expressway and for the Open Cut Siphon at Jackson Avenue. Included in this item of work shall be structure excavation, structure backfill, bar reinforcing steel, concrete, curing, permeable material, site clean-up, and all other miscellaneous items necessary for construction of Sanitary Sewer Siphon Manholes as shown on the drawings, as specified in these Specifications, and as directed by the Engineer.

30.13.02 Materials

The structures shall be constructed with Class 1 structural concrete in conformance with Article 29.01, “Structural Concrete,” of these Specifications.

Reinforcement shall conform to the provisions of Section 52, “Reinforcement”, of the State Specifications.

Precast Concrete Structures shall conform to the provisions of Section 70-1.02 H, “Precast Concrete Structures”, of the State Specifications.

30.13.03 Placement

The Contractor shall be responsible for coordination with the City of San Jose and the utility companies for the construction of the Sanitary Sewer Siphon Manholes.

The Contractor shall keep the construction site dewatered and free of standing water or excessively muddy conditions in accordance with Article 22.04, “Control of Water,” of these Specifications.

The Contractor shall perform structural excavation and structural backfill in accordance with Articles 23.04 and 23.05, respectively, of these Specifications.

Forms, falsework and shoring as required, shall be in accordance with Article 29.05, Forms and Falsework, of these Specifications.

30.13.04 Testing

Testing for the Sanitary Sewer Siphon Manholes shall be in accordance with Article 29.01, "Structural Concrete," of these Specifications.

30.13.05 Submittals

Submittals for the Sanitary Sewer Siphon Manholes shall be in accordance with Article 29.01, "Structural Concrete," of these Specifications.

30.13.06 Measurement

The Sanitary Sewer Siphon Manholes will not be measured.

30.13.07 Payment

Full compensation including furnishing all labor, materials, tools, equipment, and incidentals for doing all work to construct the Sanitary Sewer Siphon Manholes for the Bore and Jack Siphon at Capitol Expressway complete, in place as shown on the Drawings, as specified in these Specifications and as directed by the Engineer shall be included in the lump sum price bid for SANITARY SEWER SIPHON – BORE AND JACK, Bid Item No.28 and no separate payment will made therefore.

Full compensation including furnishing all labor, materials, tools, equipment, and incidentals for doing all work to construct the Sanitary Sewer Siphon Manholes for the Open Cut Siphon at Jackson Avenue complete, in place as shown on the Drawings, as specified in these Specifications and as directed by the Engineer shall be included in the lump sum price bid for SANITARY SEWER SIPHON – OPEN CUT, Bid Item No. 29 and no separate payment will made therefore.

30.14 Lyndale Pedestrian Bridge Ramp

30.14.01 Scope of Work

Lyndale Pedestrian Bridge Ramp shall consist of all work and materials necessary to construct the ramp at the Lyndale Bridge. Included in this item of work shall be excavation, bar reinforcing steel, concrete, curing, permeable material, site clean-

up, and all other miscellaneous items necessary for construction of the Lyndale Pedestrian Bridge Ramp as shown on the drawings, as specified in these Specifications, and as directed by the Engineer.

30.14.02 Materials

The structures shall be constructed with Class 1 structural concrete in conformance with Article 29.01, "Structural Concrete," of these Specifications.

Reinforcement shall conform to the provisions of Section 52, "Reinforcement", of the State Specifications.

The ramp material shall be high strength, self-weathering, low ally, atmospheric corrosion-resistant ASTM A847, cold formed, welded square and rectangular tubing using ASTM A588, ASTM A606 or ASTM A242 plate and structural shapes, (Fy = 50,000psi).

The minimum corrosion index of atmospheric corrosion resistant steel, as determined in accordance with ASTM G101, shall be 6.0. All exposed surfaces of corrosion-resistant steel shall be cleaned in accordance with Steel Structures Painting Council Surface preparation No. 6, Commercial Blasting Cleaning, SSPC-SP6, latest edition.

Shop welding shall utilize E80 series electrodes which have the same weathering characteristics as self-weathering, corrosion resistant steel. Welding shall be performed by certified welders per AWS "Standard Qualification Procedure" to perform type of work required. All welding shall be in conformance with the AWS welding Code.

All decking shall be full thickness planks unless approved otherwise.

Wood decking shall be naturally durable hardwood Ipe (Tabebuia Spp Lapacho Group) or approved equal. All planks shall be partially air dried to a moisture content of 15% to 20%, and shall be supplied S4S (surfaced four sides), E4E (eased four edges), with the edges eased to a radius of 1/8". Measured at 30% moisture content, the width and thickness shall not vary from specified dimensions by more than ± 0.04 inches. All planks shall be supplied with the ends sealed with "Anchorseal" Mobil CER-M or an equal aqueous wax log sealer.

All wood decking fasteners to be zinc plated. Self-tapping screws or hex-head bolts, with a steel plank holddown, are to be used at the ends of planks. Self-tapping screws or carriage bolts are to be used as interior connection fasteners. Powder actuated fasteners will not be allowed.

Grout and miscellaneous metals shall be in accordance with Article 29.07, "Non-Shrink Grout" and Article 30.06, "Miscellaneous Metal (Bridge)", respectively, of these Specifications.

Guardrail and safety rails on the ramp and stairs shall meet all the requirements of the California Building Code, California Industry Safety Orders and ADA.

Guardrails shall meet the Coyote Watershed Aesthetic Guidelines. Guardrail along the ramp shall be horizontal angles of sufficient strength to meet the code requirements and be located on the outside of the bridge and spaced at 3.5" on centers. Guardrail along the ramp to the pedestrian bridge shall be 4'-6" high and shall include a handrail as shown on the drawings.
A toe board shall be provided with all guardrails, and along both sides of the ramp.

30.14.03 Testing

Testing for the Lyndale Pedestrian Bridge Ramp shall be in accordance with Article 29.01, "Structural Concrete," of these Specifications.

30.14.04 Submittals

Submittals for the Lyndale Pedestrian Bridge Ramp shall be in accordance with Article 29.01, "Structural Concrete," of these Specifications.

30.14.05 Measurement

The Lyndale Pedestrian Bridge Ramp will not be measured.

30.14.06 Payment

Full compensation including furnishing all labor, materials, tools, equipment, and incidentals for doing all work to construct the Lyndale Pedestrian Bridge Ramp, complete, in place per the Drawings, as specified in these Specifications and as directed by the Engineer shall be included in the lump sum price bid for LYNDALE PEDESTRIAN BRIDGE REPLACEMENT, Bid Additive Item No. 72 if/when included in the awarded project by the District, and no separate payment will made therefore.

30.15 Channel Lining – North Babb Creek – Bid Item No. 46

The Contractor's attention is directed to Article 15.02 "Utilities", 15.03 "Protection of Existing Improvements" and 15.04 "Site Review and Monitoring of Project limits and Vicinity" of these Specifications.

30.15.01 Scope of Work

Channel Lining at North Babb Creek shall consist of all labor, equipment, and materials necessary to construct grouted rock slope protection for channel side slope protection and scouring protection, including furnishing and installing Quarter-ton rocks, concrete grout, concrete channel apron, and the North Babb Grated Box where the creek crosses the maintenance road, as shown on the Drawings, as specified in these Specifications, and as directed by the Engineer.

30.15.02 Materials

Grouted rock slope protection shall be per Article 31.02, “Grouted Rock Slope Protection” of these Specifications.

Concrete maintenance road surfacing shall be per Article 30.09 “Ramps and Apron Slabs” of these Specifications.

Materials for the North Babb Grated Box shall be per Section 30.17, “North Babb Grated Box” of these Specifications.

30.15.03 Placement

Placement of grouted rock slope protection shall be per Article 31.02, “Grouted Rock Slope Protection” of these Specifications.

Placement of concrete maintenance road surfacing shall be per Article 30.09 “Ramps, Apron Slabs, and Concrete Maintenance Road” of these Specifications.

Placement for the North Babb Grated Box shall be per Section 30.17, “North Babb Grated Box” of these Specifications.

30.15.04 Testing

Grouted rock slope protection testing shall be per Article 31.02, “Grouted Rock Slope Protection” of these Specifications.

Concrete maintenance road surfacing testing shall be per Article 30.09 “Ramps, Apron Slabs, and Concrete Maintenance Road” these Specifications.

Testing for the North Babb Grated Box shall be per Section 30.17, “North Babb Grated Box” of these Specifications.

30.15.05 Submittals

Submittals for grouted rock slope protection shall be per Article 31.02, "Grouted Rock Slope Protection" of these Specifications.

Submittals for concrete maintenance road surfacing shall be per Article 30.09 "Ramps, Apron Slabs, and Concrete Maintenance Road" of these Specifications.

Submittals for the North Babb Grated Box shall be per Section 30.17, "North Babb Grated Box" of these Specifications.

30.15.06 Measurement

Measurement for Channel Lining – North Babb Creek shall be on a square foot basis, calculated from the neat line dimensions shown on the Drawings.

The quantities for Channel Lining – North Babb Creek as shown on the Drawings and included in the bid proposal form, are the final pay quantities, in accordance with Section 9-.1.1015, "Final Pay Items," of the State Specifications.

30.15.07 Payment

Full compensation including furnishing all labor, materials, tools, equipment, and incidentals for doing all work to construct grouted rock slope protection for channel side slope protection and scouring protection, including furnishing and installing Quarter-ton rocks, concrete grout, concrete channel apron, and the North Babb Grated Box where the creek crosses the maintenance road, complete in place, as shown on the Drawings, as specified in these Specifications, and as directed by the Engineer, shall be included in the unit price bid per square foot for CHANNEL LINING – NORTH BABB CREEK, Bid Item No. 46.

30.16 Channel Lining – South Babb Creek – Bid Item No. 145

30.16.01 Scope of Work

Channel Lining at South Babb Creek shall consist of all labor, equipment, and materials necessary to construct grouted rock lining for channel side slope protection and scouring protection, including furnish and install Quarter-ton rocks, and concrete along with an a concrete surface where the creek crosses the maintenance road, as shown on the Drawings, as specified in these Specifications, and as directed by the Engineer.

30.16.02 Materials

Grouted rock lining shall be per Article 31.02, “Grouted Rock Slope Protection” of these Specifications.

Concrete maintenance road surfacing shall be per Article 30.09 “Ramps, Apron Slabs, and Concrete Maintenance Road” of these Specifications.

30.16.03 Placement

Placement of grouted rock slope protection shall be per Article 31.02, “Grouted Rock Slope Protection” of these Specifications.

Placement of concrete maintenance road surfacing shall be per Article 30.09 “Ramps, Apron Slabs, and Concrete Maintenance Road” of these Specifications.

30.16.04 Testing

Grouted rock slope protection testing shall be per Article 31.02, “Grouted Rock Slope Protection” of these Specifications.

Concrete maintenance road surfacing testing shall be per Article 30.09 “Ramps, Apron Slabs, and Concrete Maintenance Road” of these Specifications.

30.16.05 Submittals

Submittals for grouted rock slope protection shall be per Article 31.02, “Grouted Rock Slope Protection” of these Specifications.

Submittals for concrete maintenance road surfacing shall be per Article 30.09 “Ramps, Apron Slabs, and Concrete Maintenance Road” of these Specifications.

30.16.06 Measurement

Measurement for Channel Lining – South Babb Creek shall be on a square foot basis, calculated from the neat line dimensions shown on the Drawings.

The quantities for Channel Lining – South Babb Creek as shown on the Drawings and included in the bid proposal form, are the final pay quantities, in accordance with Section 9-.1.1015, “Final Pay Items,” of the State Specifications.

30.16.07 Payment

Full compensation including furnishing all labor, materials, tools, equipment, and incidentals for doing all work to construct the channel lining at South Babb Creek complete, in place as shown on the Drawings, as specified in these Specifications and as directed by the Engineer shall be included in the unit price bid per square foot for CHANNEL LINING – SOUTH BABB CREEK, Bid Additive Item No. 145 if/when included in the awarded project by the District.

30.17 North Babb Grated Box

The Contractor's attention is directed to Article 15.02 "Utilities", 15.03 "Protection of Existing Improvements" and 15.04 "Site Review and Monitoring of Project limits and Vicinity" of these Specifications.

30.17.01 Scope of Work

North Babb Grated Box shall consist of all labor, equipment, and materials necessary to construct the reinforced concrete box and grate in the maintenance road at its crossing with North Babb Creek. Included in this item of work shall be structure excavation, structure backfill, bar reinforcing steel, concrete, curing, permeable material, grating, grating embed, site clean-up, and all other miscellaneous items necessary for construction of the North Babb Grated Box, as shown on the Drawings, as specified in these Specifications, and as directed by the Engineer.

30.17.02 Materials

The structures shall be constructed with Class 1 structural concrete in conformance with Article 29.01, "Structural Concrete," of these Specifications.

Reinforcement shall conform to the provisions of Section 52, "Reinforcement", of the State Specifications.

Steel shapes and plates shall be galvanized ASTM A36 (Fy = 36,000 psi) and welded headed studs shall be ASTM A108, shall conform to the provisions of Section 75-1.02, Miscellaneous Iron and Steel", of the State Specifications.

Metal bar grating shall comply with the description, specifications, requirements and standards in National Association of Architectural Metal Manufacturer's (NAAMM) Bar Grating Manual, latest edition. Grating will be welded galvanized steel as indicated on the drawings.

30.17.03 Placement

The Contractor shall keep the construction site dewatered and free of standing water or excessively muddy conditions in accordance with Article 22.04, "Control of Water," of these Specifications.

The Contractor shall perform structural excavation and structural backfill in accordance with Articles 23.04 and 23.05, respectively, of these Specifications.

Forms, falsework and shoring as required, shall be in accordance with Article 29.05, Forms and Falsework, of these Specifications.

30.17.04 Testing

Testing for the North Babb Grated Box shall be in accordance with Article 29.01, "Structural Concrete," of these Specifications.

30.17.05 Submittals

Submittals for the North Babb Grated Box shall be in accordance with Article 29.01, "Structural Concrete," of these Specifications.

30.17.06 Measurement

The North Babb Grated Box will not be measured.

30.17.07 Payment

Full compensation including furnishing all labor, materials, tools, equipment, and incidentals for doing all work to construct the North Babb Grated Box complete, in place as shown on the Drawings, as specified in these Specifications and as directed by the Engineer shall be included in the unit price bid per square foot for CHANNEL LINING – NORTH BABB CREEK, Bid Item No. 46, and no separate payment will made therefore.

31 SLOPE PROTECTION

31.01 Rock Slope Protection —Bid Item Nos. 47, 74, 111, 146

31.01.01 Scope of Work

Rock Slope Protection shall consist of all labor, equipment, and materials necessary to construct rock slope protection for earthen sediment transport channel side slope protection, including furnish and placing Quarter-ton rock, and earth material as shown on the Drawings, as specified in these Specifications, and as directed by the Engineer.

31.01.02 Materials

Quarter-ton rock for Rock slope protection shall be Class 1/4 T rock conforming to the provisions of Section 72-2, "Rock Slope Protection", of the State Specifications, except as modified in these specifications. Rounded boulders or cobbles shall not be used.

Quarter-ton rock shall be earth tone and dark gray or brown in color. Quarter-ton rock shall be free of concrete rubbles, deleterious or organic materials and debris, and uncontaminated with regulated materials, obtained from clearing and grubbing activities as described in Article 22.02 or from a source approved by the Engineer.

Earth material for backfilling voids between Quarter-ton rock shall be imported topsoil as described in Article 41.03, "Revegetation Soil Preparation" of these Specifications.

31.01.03 Placement

Channel excavation and embankment for preparing subgrade to install rock slope protection shall be in conformance with, and paid for, as specified in Article 23.01.01, "Channel Excavation," and Article 23.01.02, "Channel Embankment," of these Specifications.

Quarter-ton rock shall be placed by Method B described in Section 72-2, "Rock Slope Protection" of the State Specifications. Local surface irregularities shall not vary from the finish grade surface by more than 6 inches measured perpendicular to the finished grade. The Engineer may require, Quarter-ton rock shall be placed by Method A described in Section 72-2, "Rock Slope Protection" of the State Specifications, if he determines it is necessary in specific locations to meet the finish grade requirements.

After the rock is in-place, backfill with channel embankment material per Section 23.01.02.02 "Channel Embankment, Materials" of these Specifications and vibrate the imported topsoil into the voids. The imported topsoil shall penetrate 6 inches into the voids between the rock.

31.01.04 Testing

The Contractor shall provide two (2) tested samples of rock, at least five (5) tons each, meeting the specified gradation. One (1) sample shall be provided at the quarry and the other sample shall be placed at the construction site and may become part of the finished rock section. These samples shall be used as frequent reference for judging the gradation of the rock supplied. Any difference of opinion between the Engineer and the Contractor shall be resolved by checking the gradation of the truckload of rock against the sample.

Mechanical equipment, a sorting site, and labor needed in checking gradation shall be provided by the Contractor at the Contractor's expense.

Foundation compaction test will be obtained from the District.

31.01.05 Submittals

Contractor shall provide for source supplying Quarter-ton rock, in advance of its use on the project, all equipment, labor, and sorting site necessary to perform gradation tests in the presence of the Engineer. A copy of the results of the test will be submitted to the Engineer for approval.

31.01.06 Measurement

Measurement for Rock Slope Protection shall be on a cubic yard basis, calculated from the neat line dimensions shown on the Drawings.

The quantities for Rock Slope Protection as shown on the Drawings and included in the bid proposal form, are the final pay quantities, in accordance with Section 9-.1.1015, "Final Pay Items," of the State Specifications.

31.01.07 Payment

Full compensation for furnishing and placing Quarter-ton rock, and imported topsoil for rock slope protection construction, including furnishing all labor, materials, tools, equipment, and incidentals for doing all work to construct rock slope protection complete, in place as shown on the Drawings, specified in these Specifications and as directed by the Engineer shall be included in the unit price

bid per cubic yard for ROCK SLOPE PROTECTION, Bid Item No. 47 and Bid Additive Item Nos. 74, 111 and 146 if/when included in the awarded project by the District.

31.02 Grouted Rock Slope Protection — Bid Item Nos. 48, 75, 112, 147

31.02.01 Scope of Work

Grouted Rock Slope Protection shall consist of all labor, equipment, and materials necessary to construct grouted rock slope protection for channel side slope protection and for scouring protection at aprons and North and South Babb Creek confluences, including furnish and Quarter-ton rock and concrete grout as shown on the Drawings, as specified in these Specifications, and as directed by the Engineer.

31.02.02 Materials

Quarter-ton rocks for grouted rock slope protection shall be Class 1/4 T conforming to the provisions of Section 72-5, “Concreted-Rock Slope Protection”, of the State Specifications, except as modified in this Article. Rounded boulders or cobbles shall not be used.

Quarter-ton rock shall be earth tone and dark gray or brown in color. Quarter-ton rocks shall be free of concrete rubbles, deleterious or organic materials and debris, and uncontaminated with regulated materials, obtained from clearing and grubbing activities as described in Article 22.02 or from a source approved by the Engineer.

Concrete grout for backfilling voids between Quarter-ton rock shall be Class 3 concrete as specified in Article 29.01, “Structural Concrete”, of State Specifications.

31.02.03 Placement

Channel excavation and embankment for preparing subgrade to install Quarter-ton rock shall be in conformance with, and paid for, as specified in Article 23.01.01, “Channel Excavation,” and Article 23.01.02, “Channel Embankment,” of these Specifications.

Quarter-ton rock shall be placed by Method B described in Section 72-5 of the State Specifications. Local surface irregularities shall not vary from the finish grade surface by more than 6 inches measured perpendicular to the finished grade. The engineer may require that Quarter-ton rock shall be placed by Method A described in Section 72-5 of the State Specifications if he determines it is necessary in specific locations to meet finish grade requirements.

Placing of Class 3 concrete grout shall be in accordance with Section 72-5.04, Placing Concrete, of the State Specifications.

Grout shall penetrate the surface of the rock slop protection by a minimum depth of 12 inches, vertically and shall penetrate from any face or side which is either exposed or placed against soil a minimum depth of 24 inches horizontally.

31.02.04 Testing

The Contractor shall provide two (2) tested samples of rock, at least five (5) tons each, meeting the specified gradation. One (1) sample shall be provided at the quarry and the other sample shall be placed at the construction site and may become part of the finished rock section. These samples shall be used as frequent reference for judging the gradation of the rock supplied. Any difference of opinion between the Engineer and the Contractor shall be resolved by checking the gradation of the truckload of rock against the sample.

Mechanical equipment, a sorting site, and labor needed in checking gradation shall be provided by the Contractor at the Contractor's expense.

Foundation compaction test will be obtained from the District.

31.02.05 Submittals

Contractor shall provide for source supplying Quarter-ton rock, in advance of its use on the project, all equipment, labor, and sorting site necessary to perform gradation tests in the presence of the Engineer. A copy of the results of the test will be submitted to the Engineer for approval.

31.02.06 Measurement

Measurement for Grouted Rock Slope Protection shall be on a cubic yard basis, calculated from the neat line dimensions shown on the Drawings.

The quantities for Grouted Rock Slope Protection as shown on the Drawings and included in the bid proposal form, are the final pay quantities, in accordance with Section 9-.1.1015, "Final Pay Items," of the State Specifications.

31.02.07 Payment

Full compensation for furnishing and placing Quarter-ton rock, and Class 3 concrete grout for grouted rock slope protection construction for channel side slope protection and scour protection at apron slabs and North and South Babb Creek

confluences, including furnishing all labor, materials, tools, equipment, and incidentals for doing all work to construct grouted rock slope protection complete, in place as shown on the Drawings, as specified in these Specifications and as directed by the Engineer shall be included in the unit price bid per cubic yard for GROUTED ROCK SLOPE PROTECTION, Bid Item No. 48 and Bid Additive Item Nos. 75, 112 and 147 if/when included in the awarded project by the District.

31.03 Slope Toe Protection – Bid Item No. 49

31.03.01 Scope of Work

Slope Toe Protection shall consist of all labor, equipment and materials necessary to excavate and construct Slope Toe Protection, including furnish and placing rock, slope protection fabric, Quarter-ton rock, and earth material as shown on the Drawings, as specified in these Specifications, and as directed by the Engineer.

31.03.02 Materials

Quarter-ton rock for Slope Toe Protection shall be Class ¼ T rock conforming to the provisions of Section 72-2, Rock Slope Protection, of the State Specifications, except as modified in these specifications. Rounded boulders or cobbles shall not be used.

Quarter-ton rock shall be earth tone and dark gray or brown in color. Quarter-ton rock shall be free of concrete rubbles, deleterious or organic materials and debris, and uncontaminated with regulated materials, obtained from clearing and grubbing activities as described in Article 22.02 or from a source approved by the Engineer.

Protection fabric to be placed on the contact surface between Slope Toe Protection trench embankment and Quarter-ton rock shall be as described in Article 32.08, “Geotextile Fabrics,” of these Specifications.

Earth material for backfilling voids between Quarter-ton rock shall be imported topsoil as described in Article 23.01.02 “Channel Embankment,” of these Specifications.

31.03.03 Placement

Excavation and embankment for preparing subgrade to install Slope Toe Protection shall be in conformance with, and paid for, as specified in Article 23.01.01, “Channel Excavation,” and Article 23.01.02, “Channel Embankment,” of these specifications.

Quarter-ton rock shall be placed by Method A, only, as described in Section 72-2 of the State Specifications. Local surface irregularities shall not vary from the finish grade surface by more than 6 inches measured perpendicular to the finished grade.

After the rock is in-place, backfill with imported topsoil and vibrate the imported topsoil into the voids. The imported topsoil shall penetrate 6 inches into the voids between the rocks.

31.03.04 Testing

The Contractor shall provide two (2) tested samples of rock, at least five (5) tons each, meeting the specified gradation. One (1) sample shall be provided at the quarry and the other sample shall be placed at the construction site and may become part of the finished rock section. These samples shall be used as frequent reference for judging the gradation of the rock supplied. Any difference of opinion between the Engineer and the Contractor shall be resolved by checking the gradation of the truckload of rock against the sample.

Mechanical equipment, a sorting site, and labor needed in checking gradation shall be provided by the Contractor at the Contractor's expense.

Foundation compaction test will be obtained from the District.

31.03.05 Submittals

Contractor shall provide for source supplying Quarter-ton rock, in advance of its use on the project, all equipment, labor, and sorting site necessary to perform gradation tests in the presence of the Engineer. A copy of the results of the test will be submitted to the Engineer for approval.

31.03.06 Measurement

Measurement for Slope Toe Protection shall be on a cubic yard basis, calculated from the neat line dimensions shown on the Drawings.

The quantities for Slope Toe Protection as shown on the Drawings and included in the bid proposal form, are the final pay quantities, in accordance with Section 9-.1.1015, "Final Pay Items," of the State Specifications.

31.03.07 Payment

Full compensation for excavating and embankment for Slope Toe Protection trench and for furnishing and placing Quarter-ton rock, protection fabric, and

imported topsoil for rock slope protection construction, including furnishing all labor, materials, tools, equipment, and incidentals for doing all work to construct Slope Toe Protection complete, in place as shown on the Drawings as specified in these Specifications and as directed by the Engineer shall be included in the unit price bid per cubic yard for SLOPE TOE PROTECTION, Bid Item No. 49.

31.04 Lateral Grade Control Structures

31.04.01 Scope of Work

Lateral Grade Control Structures shall consist of all labor, equipment, and materials necessary to construct, including furnish and placing Quarter-ton rocks, and earth material as shown on the Drawings, as specified in these Specifications, and as directed by the Engineer.

31.04.02 Materials

Quarter-ton rock for rock slope protection shall be Class 1/4 T rock conforming to the provisions of Section 72-2, "Rock Slope Protection", of the State Specifications, except as modified in these specifications. Rounded boulders or cobbles shall not be used.

Quarter-ton rock shall be earth tone and dark gray or brown in color. Quarter-ton rock shall be free of concrete rubbles, deleterious or organic materials and debris, and uncontaminated with regulated materials, obtained from clearing and grubbing activities as described in Article 22.02 or from a source approved by the Engineer.

Earth material for backfilling voids between Quarter-ton rock shall be imported topsoil as described in Article 41.03, "Revegetation Soil Preparation" of these Specifications.

31.04.03 Placement

Channel excavation and embankment for preparing subgrade to install Lateral Grade Control structures shall be in conformance with, and paid for, as specified in Article 23.01.01, "Channel Excavation," and Article 23.01.02, "Channel Embankment," of these Specifications.

Quarter-ton rock shall be placed by Method B described in Section 72-2, "Rock Slope Protection" of the State Specifications. Local surface irregularities shall not vary from the finish grade surface by more than 6 inches measured perpendicular to the finished grade. If necessary to meet these requirements, Quarter-ton rock shall be placed by Method A described in Section 72-2 of the State Specifications, if he determines it is necessary in specific locations to meet the finish grade requirements.

31.04.04 Testing

The Contractor shall provide two (2) tested samples of rock, at least five (5) tons each, meeting the specified gradation. One (1) sample shall be provided at the quarry and the other sample shall be placed at the construction site and may become part of the finished rock section. These samples shall be used as frequent reference for judging the gradation of the rock supplied. Any difference of opinion between the Engineer and the Contractor shall be resolved by checking the gradation of the truckload of rock against the sample.

Mechanical equipment, a sorting site, and labor needed in checking gradation shall be provided by the Contractor at the Contractor's expense.

Foundation compaction test will be obtained from the District.

31.04.05 Submittals

Contractor shall provide for source supplying Quarter-ton rock, in advance of its use on the project, all equipment, labor, and sorting site necessary to perform gradation tests in the presence of the Engineer. A copy of the results of the test will be submitted to the Engineer for approval.

31.04.06 Measurement

Measurement for Lateral Grade Control Structures shall be on a cubic yard basis, calculated from the neat line dimensions shown on the Drawings.

The quantities for Lateral Grade Control Structures as shown on the Drawings and included in the bid proposal form, are the final pay quantities, in accordance with Section 9-.1.1015, "Final Pay Items," of the State Specifications.

31.04.07 Payment

Full compensation for excavation and placement of Lateral Grade Control Structures and for furnishing and placing Quarter-ton rock and earth material including furnishing all labor, materials, tools, equipment, and incidentals and for doing all work involved in constructing Lateral Grade Control Structures complete, in place as shown on the Drawings, as specified in these Specifications, and as directed by the Engineer, shall be included in the unit price bid per cubic yard for ROCK SLOPE PROTECTION Bid Item No. 47 and Bid Additive Item Nos. 74, 111 and 146 if/when included in the awarded project by the District, and no separate payment will be made therefore.

32 NOT USED

33 NOT USED

34 NOT USED

35 NOT USED

36 NOT USED

37 NOT USED

38 NOT USED

39 NOT USED

40 NOT USED

41 LANDSCAPING AND REVEGETATION

The Contractor's attention is directed to Article 15.02 "Utilities", 15.03 "Protection of Existing Improvements" and 15.04 "Site Review and Monitoring of Project limits and Vicinity" of these Specifications.

41.01 General

The revegetation, landscape and irrigation work is to be accomplished in two phases or planting seasons. The second phase will include revegetation planting and landscape planting. The intent for the two phase approach is to quickly establish erosion control planting in the first season without soil disturbances late in the first season. This will provide a better environment for establishment of phase two plantings (revegetation and landscape plantings) in the second season early enough for their establishment before the second winter.

The first phase will occur in the first planting season and will include:

- Landscape creek boulders
- Soil preparation for revegetation hydroseed
- Revegetation hydroseed on both sides of the creek
- Revegetation blanket on both sides of the creek
- Planting at creek boulders within the creek (to be completed while creek is dry during construction)
- Partial irrigation installation (see Article 41.02, "Irrigation Systems" for detail breakdown of items)

The second phase will occur in the second planting season and will include:

- Revegetation planting (all planting on the right creek bank)
- Landscape planting (all planting on the left creek bank)
- Augering
- Planting basins
- Structural soil installation for trees along the maintenance road
- Vine detailing
- Completion of the irrigation system (see Article 41.02, "Irrigation Systems" for detail breakdown of items).

Definitions:

Revegetation planting – All planting taking place on the right bank of the creek. This plant material will be supplied by the District and installed by the Contractor. It will have a temporary irrigation system that will essentially run above ground by lateral lines across the slope and flexible PVC piping with emitters to plant material.

Landscape planting – All planting taking place on the left bank of the creek. This plant material is to be supplied and installed by the Contractor. It will have a permanent irrigation system that will be below grade, trenched and sleeved to plant material.

41.02 Irrigation System – Bid Item Nos. 50, 76, 113, 148

41.02.01 Scope of Work

The Irrigation work will be installed in two phases to coincide with the Revegetation and Landscape Planting work described in Articles 41.14 and 41.20.

The first year will include:

Revegetation Irrigation (Right Bank)

- installation of all controllers and their cages
- back flow preventers
- mainlines with isolation valves
- quick couplers
- remote control valve battery operated control valves
- sleeving through walls from valves

Landscape Irrigation (Left Bank)

- installation of all controllers and their cages
- back flow preventers
- mainlines with isolation valves
- master valves
- flow sensors
- quick couplers
- remote control valves
- lateral piping to vine pockets and trees and their caps
- sleeving through walls and under maintenance road

All irrigation work shall be approved prior to placement of the revegetation hydroseeding described under Article 41.10, "Revegetation Hydroseeding".

During this first year phase the Contractor will also need to develop an approach and plan for manual or temporary irrigation for establishment of the Hydroseeded and creek planting areas; See Drawings for extent of these areas.

The second year will include:

Revegetation Irrigation (Right Bank)

- lateral lines on slope
- emitters

Landscape Irrigation (Left Bank)

- bubblers at vines and trees

The second phase will occur after the first winter and prior to the second phase of Revegetation and Landscape Planting Articles 41.14 and 41.20.

The work required under this Section shall include all labor, tools, materials, equipment and incidentals required to complete the design, supply, installation and operation of the permanent bubbler, and quick coupler irrigation systems and installation of any temporary irrigation systems to the performance requirements specified herein and as directed by the Engineer. The locations of the water service point of connections, meter and backflow preventer assemblies and a schematic layout of the primary main line and general locations of the areas and the plantings to be irrigated are shown on the Drawings. Water service points of connection and water meters shall be provided off of existing San Jose Water Company water mains. See Article 15.02.03 "Utility Installation/Relocation" regarding water utility coordination.

The intent of the vegetation design for this project is to provide a self-sustaining habitat by the end of the establishment period. Irrigation and watering applications shall be conducted to facilitate healthy, self-sustaining and vigorous plants at the end of the establishment period. Water shall be applied in a way that shall facilitate the "weaning off" of plants; refer to Section 41.23, "Revegetation and Landscape Establishment Maintenance", for additional requirements.

The irrigation system shall include an automatic bubbler system with one bubbler to each plant or bubblers to plant grouping as shown on Drawings. Water application rates shall be conducted in strict coordination with the District, as described in this Article. The existing static water pressure in the area is

approximately 88-98 psi (pounds per square inch); the Contractor shall be responsible for verifying exact pressure at the water service point of connection before designing and installing the system. Contractor shall provide all required electrical service for the irrigation system. The irrigation system shall become the property of the District upon Final Acceptance of the project.

The irrigation of the plants shall begin the same day as installation and shall meet the requirements of these Specifications. All irrigation installation operations must be conducted in coordination with plant location field marking and planting hole excavation according to the Drawings. Plant locations must be field marked and approved and planting holes must be excavated before installation of individual bubblers and spray heads.

At all times irrigation and watering shall be directed by the Contractor. The Contractor shall be responsible for ensuring that the plants are watered before, during and after the installation and before project Final Acceptance. The Contractor shall be responsible for methods of watering the plant materials. Plants shall be thoroughly watered immediately after installation at individual plant locations. Before departing from the job site each day, the contractor shall water those plants installed during that day. The contractor shall continue to water the plants as directed by the Engineer to maintain the plants in a healthy and vigorous condition throughout the duration of the Contract Period, until project Final Acceptance. The frequency and duration of the watering shall depend on current weather patterns and site-specific moisture conditions at each revegetation planting area. The Contractor shall be responsible for hand watering of the plant materials in areas that do not have automatic irrigation or when the irrigation system is non-operational from installation through the entire Contract period.

The Contractor shall be responsible for site observations throughout the Contract Period to evaluate water application per the schedule prescribed in Article 41.23 “Revegetation and Landscape Establishment Maintenance”. These observations shall include observation of all plants for signs of inappropriate watering, including water stress (due to over-watering), stunted growth, wilting, premature leaf loss (for deciduous species) and premature yellowing of leaves (for deciduous species).

At no time shall any water be applied in a way that shall cause erosion, damage to plants or excessive runoff. At no time shall the watering occur in excess of one hour at an individual planting site. Should the watering application rate need adjustment, the Contractor shall be responsible for immediately contacting the Engineer for direction. The Contractor shall assume full responsibility for corrective actions resulting from inappropriate water applications and failure to contact the Engineer for direction.

The Contractor shall be responsible for coordinating and scheduling the placement of materials and equipment necessary to complete the work and for ensuring that the Subcontractors do the same, as quickly and efficiently as possible and in conformance with Article 11.06, "Schedule of Work", as required in the Special Provisions.

Unless otherwise noted in this Section, the Contractor shall be responsible for paying all fees associated with the irrigation system installation and operations including all fees associated with water use incurred during the Contract and Maintenance Period.

41.02.02 Materials

All material and equipment delivered to the job site shall be clearly marked to identify the item, material, class and thickness. All material shall be new, unblemished and installed according to the Drawings and Specifications. All pipe sizes indicated on the Drawings and specified herein are nominal inside diameter, unless otherwise noted.

All irrigation materials shall be as specified on the Drawings or an approved equal. The contractor shall provide cut sheet submittals of all irrigation products to be used including but not limited to:

- Backflow Preventer
- Backflow Preventer Cage
- Ball, Isolation and Gate Valves
- Irrigation Controller and Pedestal
- Electrical Meter Pedestal
- Mainline Pipe & Fittings
- Control Wire and Connectors
- Remote and Battery Control Valves
- Lateral Piping and fittings
- Flex Distribution Piping
- Valve Boxes and Vaults
- Rock & Wire Protection for Valve Boxes and Vaults
- Drip irrigation components (Bubblers and Emitters)

The Contractor shall handle all materials to ensure that irrigation supplies are not damaged during shipping, handling and storage. All irrigation supplies, including plastic pipe, shall be stored in a manner to prevent damage from sunlight, moisture and contact with vehicles, equipment and tools.

41.02.03 Placement

The Contractor shall be responsible for being familiar with existing grade conditions, location of fences, walls, roadways and existing vegetation that is to be retained. The Contractor shall be responsible for verification of site conditions and agency requirements before Submittal of bid. Field adjustments may be necessary to avoid impacts on existing woody vegetation.

Trenching shall avoid impacts on existing vegetation to remain. The Contractor shall be responsible for identifying any underground utilities within the project boundaries and for ensuring that excavation operations do not damage or disrupt services. The Contractor shall excavate trenches for pipelines deep enough to provide the required minimum 6-inch horizontal or vertical space between parallel pipelines when common trenching techniques used. Irrigation Trenches shall be backfilled and compacted a minimum of 90% relative density or as directed by the Engineer according to ASTM D1557. Trench backfill material shall be free of rubbish, sharp objects and stones larger than 1.5 inches in diameter. Should roots of existing trees be encountered during trenching operations, trenching operations must be stopped in said area until guidance can be provided by an ISA-certified arborist, according to Section 22, “Preparatory Work”; the Contractor is responsible for consulting with and paying all fees related to consultation with the ISA-certified arborist. Trench depths shall be as below:

A. Unless otherwise noted on the Drawings or in this Section, main lines and other pressurized trunk line pipes shall receive a minimum cover of 18 inches.
B. Lateral lines installed as part of the bubbler system for the permanent landscape plantings shall receive a minimum cover of 12 inches.
C. Lateral piping on the revegetation planting to distribution points shall be run on the surface and anchored with a no. 4 bar per the Drawings 3’ o.c. and at every tee fitting.

After main line and lateral line trenches have been excavated to the proper depth, the bottom of each trench shall be leveled and all rocks and objects greater that 1.5 inches in diameter shall be removed. The pipe and the trench bottom shall be in continuous contact.

41.02.04 Testing and Submittals

The Contractor shall be required to submit verification of the required minimum qualifications for approval by the Engineer according to Article 9.02, “Submittals to be Furnished by the Contractor” before the Award of Contract.

The Contractor shall be responsible for submitting certification of the ISA-certified arborist for approval according to Article 9.02, "Submittals to be Furnished by the Contractor" before any tree or shrub is pruned.
All irrigation materials shall be as specified on the Drawings or an approved equal. The contractor shall provide cut sheet submittals in the quantity required by the contract documents of all irrigation products to be used including but not limited to:

- Backflow Preventer
- Backflow Preventer Cage
- Ball, Isolation and Gate Valves
- Irrigation Controller and Pedestal
- Electrical Meter Pedestal
- Mainline Pipe & Fittings
- Control Wire and Connectors
- Remote and Battery Control Valves
- Lateral Piping and fittings
- Flex Distribution Piping
- Valve Boxes and Vaults
- Rock & Wire Protection for Valve Boxes and Vaults
- Bubblers and Assembly
- Glues, Solvents & Pipe Joint Compounds

The Contractor shall provide a written guarantee against defects resulting from poor installation or related material to the Engineer for a period of one (1) year after the Final Acceptance by the engineer.

The Contractor shall submit three (3) copies of the proposed irrigation design to the Engineer for approval before ordering materials and installing the system. The irrigation design shall include specifications for all materials to be used and the installation approach, as well as a plan diagramming the system's detailed design layout. As part of the irrigation work design, the Contractor shall be required to develop a watering approach based on current weather patterns, site-specific soil moisture conditions, and plant status and application rates. The Contractor shall submit recommended water application rate for District approval on a monthly basis. Installation and operation of the irrigation system shall be in strict coordination with and shall be subject to approval by the Engineer.

Upon installation, the irrigation system shall be subject to inspection by the Engineer. The Contractor shall field mark the location of the system components, including but not limited to, the water service point of connection, meter, backflow assembly, main line and lateral line trenches, valves and controllers for approval

by Engineer before installation. No main line pipe shall be covered or trenches backfilled until installed pipe has been inspected for installation alignment and quality of work and has been approved by the Engineer. The Contractor shall operate the irrigation system for approval by the Engineer.

The Contractor shall perform tests as specified and remake all faulty joints. Use of cement or caulking to seal leaks shall not be permitted at any time. The Contractor shall center-load piping with a small amount of backfill to prevent it from arching or slipping under pressure. No joint shall be covered until required testing is complete and the system is approved by the Engineer.

The Contractor shall provide a force pump and all other equipment required to test equipment.

The points of connection, ball valves, meters and backflow preventer assemblies shall be inspected at the time of the main line observation.

Before testing, the lines shall be flushed to remove dirt and other debris that may have accumulated in the pipe. After the irrigation lines have set for a minimum of 24 hours and the control valves are installed on the main line, the following test shall be performed:

1. Main line: The contractor shall fill all lines with water and test at 150 psi constant pressure for two (2) hours. The Contractor shall monitor the test pressure gage and visually inspect all joints for signs of leakage in the presence of the Engineer. If any defects are found, they must be repaired and the entire observation process must be repeated.

2. A lateral line pressure test shall not be required.

41.02.05 Measurement

Irrigation shall not be measured.

41.02.06 Payment

Full compensation for furnishing all labor, materials, tools, equipment, and incidentals and for doing all work required for installation of the irrigation systems, complete in place as shown on the Drawings, as specified in these Specifications, and as directed by the Engineer shall be included in the lump sum price bid for IRRIGATION SYSTEM, Bid Item No. 50 and Bid Additive Item Nos. 76, 113 and 148 if/when included in the awarded project by the District.

41.03 Ball Valve

41.03.01 Scope of Work

The Contractor shall install a ball valve after the meter at each water service point of connection and before each grouping of remote control valves. The water service points and meters shall be provided and shall consist of eight (8) connections with meters as shown on the Drawings. The water meters shall be located within the District right-of-way. The number of grouping of valves is as shown on the Drawings. The District shall pay all fees associated with the water services and meters. The Contractor shall be responsible for installing the main line and all required equipment, as indicated on the Drawings and according to this section, to the water service point of connection in strict coordination with the District.

41.03.02 Materials and Placement

The Contractor shall be responsible for conforming to all governing codes and supplying all material to install the irrigation system connection to the water service point. One ball valve, rated a minimum of 150 WOG, shall be set below grade at each of the locations shown on the Drawings. Refer to the drawings for sequencing and size of the ball valves, meter and main line.

Drain rock to be used to backfill around the ball valve shall be 1/2 inch diameter and be clean and free flowing.

41.03.03 Testing and Submittals

The Contractor shall field mark the connection location of the ball valve at the water services and at each grouping of valves for approval by the Engineer before installation. The Contractor's installation operations shall be subject to inspection and approval by the Engineer.

41.03.04 Measurement

Ball valve installation at the water service shall not be measured.

41.03.05 Payment

Full compensation for furnishing all labor, materials, tools, equipment, and incidentals and for doing all work required for Ball Valves, complete in place as shown in the Drawings, as specified in these Specifications, and as directed by the Engineer shall be included in the lump sum price bid for IRRIGATION SYSTEM,

Bid Item No. 50 and Bid Additive Item Nos. 76, 113 and 148 if/when included in the awarded project by the District, and no separate payment shall be made therefore.

41.04 Reduced Pressure Backflow Preventer

41.04.01 Scope of Work

The Contractor shall supply and install a reduced pressure backflow preventer at each location shown on the Drawings.

41.04.02 Material and Placement

The reduced pressure backflow preventer shall be a reduced pressure unit, Wilkins Model No. 975 (2 ½") or equal and shall have a maximum pressure loss of 12 pounds at a flow of 20 GPM. The backflow assembly shall be installed in a vandal-proof enclosure and shall be placed between the water meter and the ball valve. The Contractor shall be responsible for installing the backflow assembly and enclosure according to all governing codes and manufacturer's specifications; the Contractor shall be responsible for supplying and renewing annual certification for the backflow assembly during the entire Contract Period, including the 3 year Establishment Maintenance Period.

41.04.03 Testing and Submittals

The Contractor shall submit specification for the reduced pressure backflow preventer and the vandal-proof enclosure for approval by the Engineer according to Article 9.02, "Submittals to be Furnished by Contractor" before ordering materials. The Contractor shall field mark the location of the backflow assembly for approval by the Engineer before installation. The Contractor's installation operations shall be subject to inspection and approval by the Engineer.

41.04.04 Measurement

Backflow assembly shall not be measured.

41.04.05 Payment

Full compensation for furnishing all labor, materials, tools, equipment, and incidentals and for doing all work required for installation of Reduced Pressure Backflow Preventers, complete in place as shown on the Drawings, as specified in these Specifications, and as directed by the Engineer shall be included in the lump sum price bid for IRRIGATION SYSTEM, Bid Item No. 50 and Bid Additive Item

Nos. 76, 113 and 148 if/when included in the awarded project by the District, and no separate payment shall be made therefore.

41.05 Irrigation Controller

41.05.01 Scope of Work

The Contractor shall supply and install pedestal mounted controllers at each location shown on the Drawings.

The Contractor shall include and provide monthly web access fees for monitoring by both the Contractor and District Vegetation Management Unit.

41.05.02 Material and Placement

Controllers shall each be an ET Water Smart (Model per Drawing) or equal, irrigation controller pedestal mounted and installed in vandal-proof Strong Box enclosure or equal. Controllers shall have a minimum of four (4) independent programs and a 30-day calendar. Install controller and enclosure according to manufacturer's specifications. Control wire from controller to control valves shall be #12 gauge for the common wire and #14 gauge for the control wire. The Contractor shall provide a set of controller keys to the Engineer.

41.05.03 Testing and Submittals

The Contractor shall submit specification for the controller and pedestal for approval by the Engineer according to Article 9.02, "Submittals to be Furnished by Contractor" before ordering materials. The Contractor shall field mark the location of the controllers before installation. The Contractor's installation operations shall be subject to inspection and approval by the Engineer.

The irrigation controller shall be tested after the main line and valves have been installed. During the tests, each valve shall be activated for a sufficient period of time to allow the Engineer to inspect the specific valve location and to ensure that the controller operates the valve for the specified amount of time. The Contractor shall notify the Engineer (3) days in advance of testing.

The Contractor shall be responsible for obtaining all inspections required by the local agencies.

The Contractor shall submit to the Engineer the original and four (4) copies of the manufacturer's specifications for installing, operating and maintaining the controller, as well as two (2) copies of the key to the controller.

41.05.04 Measurement

Irrigation Controllers shall not be measured.

41.05.05 Payment

Full compensation for furnishing all labor, materials, tools, equipment, and incidentals and for doing all work required for installation of Irrigation Controllers, complete in place as shown on the Drawings, as specified in these Specifications, and as directed by the Engineer shall be included in the lump sum price bid for IRRIGATION SYSTEM, Bid Item No. 50 and Bid Additive Item Nos. 76, 113 and 148 if/when included in the awarded project by the District, and no separate payment shall be made therefore.

41.06 Irrigation Main Line

41.06.01 Scope of Work

The Contractor shall furnish and install Schedule 40 PVC pressure main line and the pressurized trunk line pipe for the irrigation system from the water service point to the individual valve locations according to the schematic layout shown on the drawings. Main line pipe materials shall be as specified on the detail and according to Article 23, “Earthwork” of these Specifications.

41.06.02 Materials and Placement

Pressure main line shall be Schedule 40 PVC, Type I; manufactured in conformance to ASTM D1785 for rigid PVC compounds; for the primary routing shown on the Drawings, the main line from each point of connection shall be a minimum of 1 ½ -inch diameter.

41.06.03 Testing and Submittals

The Contractor shall field mark the complete layout of the main line for approval by the Engineer before installation. The Contractor’s installation operations shall be subject to inspection and approval by the Engineer. The main line shall be tested at ISO PSI.

41.06.04 Measurement

Main line shall not be measured.

41.06.05 Payment

Full compensation for furnishing all labor, materials, tools, equipment, and incidentals and for doing all work required for installation of Irrigation Main Lines, complete in place as shown on the Drawing, as specified in these Specifications, and as directed by the Engineer shall be included in the lump sum price bid for IRRIGATION SYSTEM, Bid Item No. 50 and Bid Additive Item Nos. 76, 113 and 148 if/when included in the awarded project by the District, and no separate payment shall be made therefore.

41.07 Irrigation Lateral, Bubbler and Emitter System

41.07.01 Scope of Work

The Contractor shall supply and install a drip irrigation system per the drawings, details and these specifications to adequately water the revegetation plant materials with emitters for a period of at least 5 years and water the landscape plantings of trees and vines with bubblers permanently.

41.07.02 Materials and Placement

Before installation, the Contractor shall field mark the location of all components of the irrigation system, including, but not limited to: controllers, control valve, lateral line pipe, bubblers, and emitters for approval by the Engineer.

The bubblers and emitters shall be set at plant hole locations flagged according to Articles 41.14.03 “Revegetation Planting Placement” and 41.20.03 “Landscape Planting Placement” The bubblers and emitters shall be set above grade immediately at each individual plant to receive irrigation. Bubblers and emitters shall be staked securely with a erosion control staple into the ground. Lateral line pipe shall run from control valves to planting areas and shall be set below grade on the (left) landscape planting and above ground on the (right) revegetation planting according to the Drawings. Flexible sch. 40 PVC tubing shall connect bubblers and emitters to lateral line pipe distribution points. Bubblers and emitters shall be per the legend or an approved equal.

Flexible PVC Solvent Cement to be Weld-On 795, medium bodied, high strength for felx to felx and felx to rigid pipe and fittings, or approved equal.

Non-pressure lateral line shall be Schedule 40 PVC, Type I; manufactured in conformance to ASTM D1785 for rigid PVC compounds and shall be a minimum of ¾-inch diameter and a maximum of 1 1/2-inch diameter; at no time shall flow

velocities in pipe exceed 5 feet per second. Run rigid PVC to the distribution points and black flexible PVC from distribution points to each plant to receive a bubbler.

41.07.03 Testing and Submittals

The bubbler and emitter irrigation system shall be tested at operating pressures and inspected for leakage by the Engineer concurrently with final inspection of the entire operating irrigation system at the completion of the Construction Period, before the start of the Establishment Maintenance Period. If it is determined that the bubbler irrigation system or any of its parts are improperly installed, corrections shall be made by the Contractor at the Contractor's expense to ensure that the system conforms to the Drawings and these Specifications.

The Contractor shall be responsible for obtaining all inspections required by the local agencies.

The Contractor shall submit to the Engineer the original and four copies of the manufacturer's specifications for installing, operating and maintaining the controller, as well as two copies of the key to the controller.

41.07.04 Measurement

No measurement shall be made for the bubbler irrigation system.

41.07.05 Payment

Full compensation for furnishing all labor, materials, tools, equipment, and incidentals and for doing all work required for installation of Irrigation Lateral, Bubbler, and Emitter System, complete in place as shown on the Drawings, as specified in these Specifications, and as directed by the Engineer shall be included in the lump sum price bid for IRRIGATION SYSTEM, Bid Item No. 50 and Bid Additive Item Nos. 76, 113 and 148 if/when included in the awarded project by the District, and no separate payment shall be made therefore.

41.08 Record Drawings, Irrigation

41.08.01 Scope of Work

The Contractor shall prepare "as-built" record drawings to document the planning irrigation installation and the Establishment Maintenance Period. These drawings shall be updated daily and kept at the job site.

41.08.02 Material and Placement

The Contractor's final record drawings shall be to scale and shall be prepared on reproducible Mylar film suitable for reproducible printing. The record drawings shall include locations and sizes of the points of connection, ball valves, backflow preventer, controllers, pressurized mainlines, non-pressurized lateral lines, quick coupling valves, control valves, gallons per minute used and station number of each valve and bubbler and spray head assemblies. Additionally, control valves shall be located and dimensioned from three known points. Bubbler assemblies shall be included and shall indicate the identification number of each run, the total gallons per minute being distributed through each valve, and the species and quantity of plants irrigated.

Each record drawing shall include a legend listing all materials and equipment used.

41.08.03 Testing and Submittals

Before the Final Acceptance of the project, the Contractor shall provide the Engineer with two sets of newly printed record drawings.

Within two (2) weeks following the completion of any replacement operations, including plant and irrigation system component replacement, the Contractor shall supply the Engineer with revised record drawings and summary tables indicating all updates of items that have been replaced.

41.08.04 Measurement

Irrigation system record drawings shall not be measured.

41.08.05 Payment

Full compensation for furnishing all labor, materials, tools, equipment, and incidentals and for doing all work required for Record Drawings, Irrigation, complete in place as shown on the Drawings, as specified in these Specifications, and as directed by the Engineer shall be included in the lump sum price bid for IRRIGATION SYSTEM, Bid Item No. 50 and Bid Additive Item Nos. 76, 113 and 148 if/when included in the awarded project by the District, and no separate payment shall be made therefore.

41.09 Revegetation Soil Preparation

41.09.01 Scope of Work

The intent of the work to be performed in this section is to verify appropriate soil media to encourage establishment of plant material for sustainable long-term plant growth.

The contractor under this section shall work closely with the contractor and engineer performing the EARTHWORK – under Article 23.

Revegetation Soil Preparation shall consist of furnishing all labor, materials, tools, equipment, and incidentals to evaluate and prepare soil, as shown on the Drawings, as specified in these Specifications, and as directed by the Engineer.

Definitions

A. Existing Soil: Areas of native soil.

B. Subgrade: Soil level resulting from the rough grading work under another Section and may consist of either imported subgrade fill or native soil.

C. Stockpiled Native Soil: Soil suitable for plant growth (determined by article 22.01.04 "Testing") can be stockpiled for use in areas where fill may be necessary.

Project Site Conditions - For protection of existing trees along the property line, see Section 22.02, "Clearing and Grubbing," of these Specifications. Contractor shall confirm with the Engineer imported fill that has been placed in and that confirm that all existing unsuitable soil had been removed from the project site prior to proceeding with the work.

Quality Assurance - Soil shall be free from chemicals, debris and trash, rocks and other material larger than one (1) inch in diameter. Do not obtain topsoil from poorly drained sites such as bogs or marshes. Do not obtain topsoil from zone deeper than one (1) foot below existing finish grade of borrow area.

41.09.02 Materials

Soil Amendments - The intent of this project is to establish revegetation utilizing the native soil without the use of organic amendments or fertilizers. Should the soils analysis work conducted under Article 22.01.04, "Testing" indicate

problematic soils such as elements like boron in high levels or PH levels out of the range of the prescribed plant palette the plant pallet would be adjusted without amending the soils.

Imported Structural Soil - Structural soil is to be used in tree planting pits along the maintenance road only as indicated on the Drawings and details. See article 41.20, "Landscape Planting"

Structural Soil Mix shall conform with "CU Soil", as patented by Cornell University, Patent #5,849,069. The product shall be obtained from a licensed producer and proof of such licensing.

Structural soil CU-Structural Soil™ (U.S. Patent # 5,849,069) is a two-part system comprised of a rigid stone "lattice" to meet engineering requirements for a load-bearing soil, and a quantity of soil, to meet tree requirements for root growth. The lattice of load-bearing stones provides stability as well as interconnected voids for root penetration, air and water movement. The uniformly graded 3/4"-1 1/2" angular crushed stone specified for CU-Structural Soil™ is designed to ensure the greatest porosity. Crushed or angular stone provides more compaction and structural interface of stone-to-stone than round stone. Because stone is the load-bearing component of structural soil, the aggregates used should meet regional or state department of transportation standards for pavement base courses.

Since among soil textures, clay has the most water and nutrient-holding capacity, a heavy clay loam or loam, with a minimum of 20% clay, is selected for the CU-Structural Soil™ system. CU-Structural Soil™ should also have organic matter content ranging from 2%-5% to ensure nutrient and water holding while encouraging beneficial microbial activity. A minimum of 20% clay is also essential for an adequate cation exchange capacity.

With carefully chosen uniformly-graded stone and the proper stone to soil ratio, a medium for healthy root growth is created that also can be compacted to meet engineers' load-bearing specifications. The intention is to "suspend" the clay soil between the stones without over-filling the voids, which would compromise aeration and bearing capacity. CU-Structural Soil™ utilizes Gelscape® hydrogel as a non-toxic, non-phytotoxic tackifier, in addition to stone and soil components.

41.09.03 Placement

Stockpiling - Stockpile on site as directed by the Engineer.

Soil Moisture Content – Do not work with soil when moisture content is so great that excessive compaction will occur, nor when it is so dry that dust will form in

air or that clods will not break readily. Apply water, if necessary, to bring soil to an optimum moisture content for tilling and planting. Maintain within 2 percent above or below optimum moisture content at all times during the work.

Clearing and Cultivation - Clear all planting areas of stones 2-inch diameter and larger, weeds, debris and other extraneous materials prior to soil preparation work. Cultivate areas of existing soil to receive planting to a depth of six (6) inches immediately prior to applying soil amendments.

41.09.04 Testing

Test Reports required for the following:

41.09.05 Horticultural Soil Analysis

Soil shall be tested by an approved horticultural testing lab at Contractor's cost after rough grading work is complete and before irrigation work occurs. Soil samples shall be taken at 250 foot intervals along the entire reach. Samples shall be numbered and mapped on a bond copy of the planting plans. Samples shall be individually tested for PH, SAR, salinity, fertility and micro nutrients and elements. Soil analysis shall be used to confirm that the specified plant pallet is appropriate. No fertilizers or amendments will be applied.

41.09.06 Submittals

Manufacturer's current catalog cuts and specifications of the following:

- CU Structural Soil or equal available from TMT Enterprises, (408) 432-9040. Provide cut sheet of blend of rock size and type and soil analysis per article 22.01.04 Testing
- Horticultural Soil Analysis to be performed at Soil and Plant Laboratory, Inc., 352 Mathew Street (P.O. Box 153), Santa Clara, CA 95050, Tel. (408) 727-0330; or Root Zones Associates, P.O. Box 18911, San Jose, CA 95118, Tel. (408) 264-7024 or approved equal.

41.09.07 Measurement

Measurement shall not be made for soil preparation.

41.09.08 Payment

Full compensation for furnishing all labor, materials, tools, equipment, and incidentals and for doing all work involved in soil preparation as shown on the

Drawings, as specified in these Specifications, and as directed by the Engineer, shall be included in the lump sum or unit price per bid for the items requiring soil preparation and no additional payment will be therefore.

41.10 Revegetation Hydroseeding – Bid Item No. 51, 77, 114, 149

41.10.01 Scope of Work

Revegetation Hydroseeding shall consist of soil preparation and all work and materials necessary including water to furnish and place hydroseeding on the right side of the channel (revegetation side) to the limits shown on the Drawings, as specified in these Specifications, and as directed by the Engineer.

The hydroseed shall be pre-germinated by October 15 of any year.

Seed germination will be the responsibility of the Contractor by means of manual or temporary irrigation as necessary.

This item does not include Erosion control Hydroseeding, which is specified in Article 22.06, "Erosion Control Hydroseeding."

41.10.02 Materials

Revegetation Hydroseed Mixture

The hydroseed mixture shall consist of Grasses and Forbs and live seed.

See Plant List on the Drawings for species and pounds of pure live seed per acre. Percent purity and percent germination are given by the manufacturer and shall be submitted to the Engineer by the Contractor upon delivery.

1. 1,000 pounds per acre of virgin wood fiber or recycled paper fiber mulch, Nature's Own or equal.

2. 75 pounds per acre of tackifier.

3. Sufficient water for application.

4. Coloring agent to be a biodegradable, nontoxic coloring agent free from copper, mercury, and arsenic.

Seed, as supplied by the Contractor, shall be from San Francisco Bay Area ecotypes, when available.

Potential sources of seed mixes are: Pacific Coast Seed, 6144-A Industrial Way, Livermore, CA 94550, (925) 373-4417; and ConservaSeed (916) 776-1200.

Seed shall be kept in a cool, shaded place until utilized. Contractor shall request seed delivery just before installation and only in the amounts that can be planted that day to prevent heating and desiccation.

Mycorrhizal inoculums shall be included in the hydroseed slurry. Edno (arbuscular) mycorrhizal inoculums will consist of spores, mycelium, and mycorrhizal root fragments in a solid carrier suitable for hydroseeding (available from BioNet LLC. Marina, CA (831) 582-3477, or equal). Inoculums shall be applied at 60 pounds per acre.

41.10.03 Soil Preparation

Soil preparation for revegetation hydroseeding shall be in accordance with "Erosion Control Hydroseeding" Article 22.06.03, "Soil Preparation" and Article, 41.09 "Revegetation Soil Preparation".

41.10.04 Placement

Hydroseeding Preparation and Application-

The boundaries of areas to be hydroseeded will be as shown on the Drawings and as directed by the Engineer. The Contractor shall accompany the Engineer to confirm the hydroseeding limits.

The Contractor shall plan and execute the hydroseeding so as to allow the seeds to establish and grow prior to the next growing season.

Hydroseed slurry mixture shall consist of seed and mycorrhizal inoculums and will be applied in one (1) operation.

Mixing shall be performed in a tank, with a built-in continuous agitation and recirculation system, of sufficient operating capacity to produce homogeneous slurry and a discharge system that will apply the slurry to the designated areas at a continuous and uniform rate.

The slurry preparation shall take place at the project site and shall begin by adding water to the tank when the engine is at half throttle. When the water level has

reached the height of the agitator shaft, good recirculation shall be established, and at this time the seed, wood fiber hydro-mulch, and mycorrhizal inoculums shall be added. Spraying shall commence immediately when the tank is full.

Contractor shall spray designated areas with the slurry in a sweeping motion, in an arched stream, until a uniform coat is achieved and the material is spread at the required rates per acre.

At all times, materials will be kept uniformly mixed in the hydroseed tank during the duration of the application operation. The seed, wood fiber hydro-mulch, and mycorrhizal inoculums shall be kept suspended in the hydroseed tank such that all of the components are applied evenly.

The mixture shall be applied at the rates shown on the Drawings and within one (1) hour after the mycorrhizal inoculums has been added to the hydroseed tank.

In applying the slurry, care shall be taken to provide even and uniform coverage. Overspray and other residue or trash from the hydroseeding operations shall be cleaned and removed from the site on the same day of application.

A slurry mixture, which has not been applied within four (4) hours after mixing, shall be rejected and replaced at the contractor's expense.

Hydroseeding operations shall not take place if temperatures are over ninety degrees Fahrenheit (90ºF) to preserve the integrity of the mycorrhizal inoculums.

Place erosion control blanket on top of hydroseeded surface. Fasten blanket to soil over all areas to receive hydroseed in accordance with Article 22.07, "Erosion Control Blanket".

The Contractor shall irrigate the hydroseeded area until sufficient establishment if required by weather conditions and to ensure growth. Washed areas or erosion shall be repaired by restoring finished grades and re-seeding.

41.10.05 Testing

No special requirements.

41.10.06 Submittals

Contractor shall submit samples to the Engineer of all Contractor furnished materials, including seed mix certificate and mycorrhizal inoculums for approval forty-eight (48) hours prior to commencing preparation. Hydroseed shall not be

applied until approved by the Engineer.

41.10.07 Measurement

Measurement for hydroseeding shall be per square foot of a completely supplied and installed revegetation hydroseeding on the right bank by the Contractor and approved by the Engineer as measured in the field.

41.10.08 Payment

Full compensation for furnishing all labor, materials, tools, equipment and incidentals and for doing all work required including Soil Preparation to install revegetation hydroseeding on the right side of the channel complete, in place, as shown on the Drawings, as specified in these Specifications, and as directed by the Engineer, shall be paid at the contract unit price per square foot for REVEGETATION: HYDROSEEDING, Bid Item No. 51 and Bid Additive Item Nos. 77, 114 and 149 if/when included in the awarded project by the District.

Costs incurred for repair or replacement of bare, sparse or damaged areas during construction and the 3-year establishment maintenance period (ON THE LANDSCAPED RIGHT BANK REVEGETATION ONLY) shall be included in the unit price bid per square foot for REVEGETATION and LANDSCAPE ESTABLISHMENT and MAINTENANCE, Bid Item No. 56, and Bid Additive Item Nos. 82, 119 and 154 if/when included in the awarded project by the District, and no separate payment will be made therefore.

41.11 Revegetation Blanket - Bid Item No. 52, 78, 115, 150

41.11.01 Scope of Work

This work includes installing revegetation blanket and shall consist of all work and materials necessary to furnish and place rolled revegetation blanket, complete in place, to the limits shown on the Drawings, as specified in these specifications, and as directed by the Engineer.

This item does not include Erosion Control Blanket, which is specified in Article 22.07, “Erosion Control Blanket”.

41.11.02 Materials

Materials shall be in accordance with Erosion Control Blanket Article 22.07.02, “Materials”.

41.11.03 Fasteners

Fasteners shall be in accordance with Erosion Control Blanket Article 22.07.03, “Fasteners”.

41.11.04 Submittals

Submittals shall be in accordance with Erosion Control Blanket Article 22.07.04, “Submittals”.

41.11.05 Testing

No testing is required for Revegetation Blanket.

41.11.06 Placement

Prior to placing and securing blankets review all installation, lapping and staking details and procedures with engineer for approval.

Contractor to place a three foot wide section of Blanket as directed below and per the Drawings for engineer review and approval prior to installing the remaining Revegetation blanket.

Revegetation Blanket shall be installed within 4-hours of Revegetation Hydroseeding (see Article 41.10). The blanket shall be carefully placed as to not disturb the hydroseeding. Place and secure the blanket per the Drawings. Use a trench to secure and bury a 1-foot section of the top edge of the blanket with a flap of 12”-18” to fold back over the top of the trench. In the bottom of the trench secure the blanket with stakes 12” on center. Place the blankets in the direction of the flow of the channel and bank with an overlap of 4”-6”. Provide stapling and staking per the Drawings. Fiber roll used at the bottom trench to help anchor the end of the blanket be in accordance to Article 22.05.04, “Fiber Rolls”.

41.11.07 Measurement

Measurement for revegetation blanket shall be per square foot of a completely supplied and installed erosion control blanket by the Contractor and approved by the Engineer as measured in the field.

41.11.08 Payment

Full compensation for furnishing all labor, materials, tools, equipment and

incidentals, the temporary storage of materials, and for doing all work required for installing revegetation blanket, including fasteners, anchor assembly, and rope tension restraint, complete in place per the Drawings as specified in these specifications and as directed by the Engineer shall be included in the unit price bid per square foot for REVEGETATION BLANKET, Bid Item No. 52 and Bid Additive Item Nos. 78, 115 and 150 if/when included in the awarded project by the District.

Costs incurred for repair or replacement of damaged areas during construction and within the first year's planting season prior to installing Revegetation and Landscape Planting per Articles 41.14 and 41.20 shall be at the Contractor's expense, and no additional payment will be made therefore.

41.12 Augering

41.12.01 Scope of Work

Augering shall consist of all work necessary to vertically decompact native soil deep in place by augering at the locations flagged by the Contractor and approved by the Engineer, to remove all objectionable material encountered, and to reinstall flags as shown on the Drawings as specified by these specifications.

All planting and augering work shall be in accordance with the findings and recommendations in the "Geotechnical Investigation Report for Lower Silver Creek Reaches 4-6A" by Parikh Consultants, Inc., dated May 2010.

41.12.02 Placement

The Contractor shall notify the Engineer 48 hours prior to the commencement of this work to review and approve the flagging by the Contractor. Augering layout shall be reflective of the species layout mock-ups for the revegetation planting previously approved by the District Coordinator (per Article 41.14.03 for "Revegetation Planting-Placement".

The objective of augering is to decompact the soil in place at planting locations, not to create holes.

The Contractor will need to cut through the revegetation blanket that was established during the phase 1 revegetation portion of work per Article 41.11, "Revegetation Blanket". Refer to Drawings to determine size of cut through blanket.

The Contractor will flag the auger locations per the Drawings and details. If

unsuitable materials required, removal and replacement shall be per Article 23.06, "Unsuitable Material." The diameter and depth of the augering will vary based on the planting at each location, refer to Drawings. The Contractor will place flags that are color coded to indicate the species of the plant to be planted at that location. The Contractor shall be responsible for the final diameter and depth of the augering as shown on the Drawings and as specified in these Specifications.

The contractor shall backfill augured location with soil within 2 hours of excavation to prevent auger wall and bottom from drying. Augering and backfilling shall be accomplished by uniformly loosening the soil to the dimension shown in the Drawings. Backfill material shall not be compacted in the augured locations. The objective is to decompact the soil. The result shall be a continuous volume of loose soil free of rocks, air pockets, soil clods or any other debris greater than 2 inches in diameter. Excess soil shall be used to create irrigation berms around planting site(s) per the Drawings when preparing planting basins.

Prior to planting, each planting basin shall be settled to the satisfaction of the Engineer either by repeated filling of the irrigation basins with standing water or by jetting. Settling by all methods shall be conducted in a manner such that minimal soil disturbance, and no mixing, nor "boiling" occurs. Planting may proceed only after enough drainage and drying has occurred such that, in the Engineer's opinion, the soil structure is not damaged when worked. The Contractor shall reinstall the flagging at the center of augured location after augering is complete.

41.12.03 Measurement

Measurement shall not be made for augering work.

41.12.04 Payment

Full compensation for furnishing all labor, materials, tools, equipment, and incidentals, and for doing all work required for Augering, complete, in place as shown on the Drawings and as specified in these specifications shall be included in the unit price bid per square foot for REVEGETATION PLANTING, Bid Item No. 53 and Bid Additive Item Nos. 79, 116 and 151 if/when included in the awarded project by the District, and no separate payment will be made therefore.

41.13 Soil Scarification

Soil scarification shall be in accordance with Erosion Control Hydroseeding Article 22.06.03, "Soil Preparation" and Article 41.09, "Revegetation Soil Preparation". At the time of Revegetation and Landscape planting no additional

soil scarification will be necessary since an established base of grasses and herbs will be in place from the growth of the previous revegetation hydroseeding from the prior growing season.

Full compensation for soil scarification including furnishing all labor, materials, tools, equipment, and incidentals and for doing all work shall be included in the lump sum or unit price bid for the items of work which require soil scarification and no additional payment will be made therefore.

41.14 Revegetation Planting – Bid Item Nos. 53, 79, 116, 151

41.14.01 Scope of Work

Project revegetation plant material shall consist of plugs and container grown plants that are supplied by the District as Indicated in Article 13.07, "District Furnished Materials and Equipment".

Planting to take place within the creek at the landscape creek boulders is to occur during the first construction season while the creek is dry. All other revegetation planting under this Article shall take place in the second planting season as directed on the Drawings.

- For Augering see Article 41.12
- For Planting Basins see Article 41.15
- For Plug Planting see Article 41.16
- For Dee-Pot Container Planting see Article 41.17
- For Tree-Pot Container Planting see Article 41.18
- For Tree-Band Container Planting see Article 41.19

The work required under this Article includes all labor, transportation, tools, equipment, excavation, materials, and other incidentals necessary to execute the required planting work, as shown on the Drawings, Specifications and as directed by the Engineer. The Contractor will perform work according to all applicable laws, codes and regulations required by Federal, State and Local authorities.

If significant rain, creek over-banking or groundwater incursion occurs during planting work and the Engineer determines that soil moisture content has exceeded the acceptable workable level, planting work may be temporarily halted. The Engineer shall determine when planting work shall resume.

Examination and Verification of Project Site Conditions:

A. Finish Grades: Verify that all grades are within 1-inch plus or minus of required finish grade.

B. Soil Preparation: Do not commence planting work prior to completion and acceptance of soil preparation in area to be planted.

C. Irrigation: Verify that irrigation system has been installed and accepted.

Sequence and Scheduling – Containerized plants will be available to the Contractor August 1, 2011 and shall be planted between August 1 to October 1 of each growing season.

The Contractor shall coordinate the layout of container plant material with the Engineer, and with other work as described in this Article. The Contractor shall be responsible for coordinating the delivery of the container stock. The Contractor shall provide to the Engineer a minimum of 48 hours advance notice of delivery of container stock and coordinate with the Engineer the location of any storage area that may be necessary to hold the plant material.

Contractor to coordinate the work of other sections. Delays caused by the Contractor in completing planting operations, which extend the planting into more than two planting season shall extend the Warranty & Maintenance Period correspondingly.

41.14.02 Materials

Storage and Handling – Handling and storage of plants and seed delivered to the site and accepted by the Contractor become the responsibility of the Contractor. The Contactor shall retain all standard containers bearing original labels legibly showing quantity, analysis, and genus/species. Protect containers from sun during summer months with temperatures above 80F. Keep plants that cannot be planted immediately upon delivery in the shade, well protected and well watered. The Contractor shall handle and store all seeds and container plants in such a manner as to protect them from animals, weather (drought, flooding, frosts, wind, etc.) vandalism, toxic irrigation water and any other conditions that may damage or reduce the viability of effectiveness of the plant material.

Substitutions – There will be no substitutions for Revegetation plant material provided by the District unless the District approves.

Mixes – Backfill Mix for Plant Pits shall be native topsoil that has not been amended or approved stockpiled native topsoil. See Article 41.09, "Revegetation Soil Preparation," of these Specifications. No pre-emergent herbicide may be used on this project.

Water - Water used in installation of planting shall be clear and free from injurious amounts of oil, salt, acid, alkali, or any other toxic substance. It shall be the Contractor's responsibility to make necessary arrangements for use of available water supplies.

Source and Quality Control – Plug and Container plant material, at the quantities indicated on the Drawings shall be provided by the District.

Warranty and Replacements – Warrant that all plants planted under this Contract will be healthy and in flourishing condition of active growth one (1) year from date of Final Acceptance. Contractor shall not be held responsible for failures due to the Owner's negligence, vandalism, and natural disaster, which occur during the warranty period. Report such conditions to the District.

Correct Species – Warrant that all plant materials are true to species and variety. Final warranty of plant material shall be based on achieving success requirements described in Article 41.23, "Revegetation & Landscape Establishment Maintenance," of these Specifications.

Failed materials shall be addressed as follows:

A. Repair and/or replace at no cost to the Owner all plant materials exhibiting conditions which are determined as unacceptable due to workmanship by the Contractor.

B. Closely match replacements to adjacent specimens of the same species. Apply requirements of this Specification to replacements.

Incorrect Materials shall be addressed as follows:

A. During Warranty Period, Contractor shall replace at no cost to Owner plants revealed as being untrue to name and species.

B. Contractor shall provide replacements of a size and quality to match the planted materials at the time the mistake is discovered.

Mulch –shall be Landscape Compost made from clean ground yard trimmings (grass, leaves, limbs, and branches) from Curbside Yard Waste Collection

Programs equivalent to Z-Best

- Particle Size: ½" minus
- Organic mater: 25% to 38%
- Carbon to Nitrogen Ratio: 14:1 to 20:1
- pH: 7.1 to 8.2
- Calcium Ranges: Calcium 3.14% to 4.28%

Landscape Compost shall be delivered to the site in bulk with the manufacturer's chemical analysis.

41.14.03 Placement

Plant Layout – The intent of the planting layout is to create a random pattern that replicates as closely as possible, a natural riparian ecosystem. It is the Contractor's responsibility to achieve this with use of the Drawings and by providing (3) 200'-0" preliminary planting layout mock-ups at the beginning of the project for the District to review and approve. The location of the mock-ups occurs at three different site conditions. One will be at station 132+00 to 134+00 where there is a large area of upper right bank, another will be at station 157+50 to 159+50 where there is a narrow area of lower bank planting and a tall flood wall the last one will be at station 193+00 to 195+00 where there is a large lower bank planting area. These preliminary planting layout mockups shall be used as a tool for the Contractor to demonstrate their revegetation planting layout ability for the review and approval by the District Engineer. The intent is that once the layout is approved, both the Contractor and the Engineer can refer back to this approved layout for reference and shall apply approved layout techniques to the remaining planting areas in the reaches.

Plant Species Layout Mockups: Contractor shall note that the installation of the revegetative planting is integral to the irrigation system. The Contractor shall first install irrigation mainline laterals and pertinent irrigation equipment (see Articles 41.02 through 41.08) prior to plant layout. Once complete, the contractor shall layout a 200'-0" section of revegetation planting per the Drawings for the District Engineer to review and approve. The Contractor shall use different flag colors and markings to allow for easy identification of each species to be planted. Each flag shall designate the center location of each plant and its planting pit.

Prior to contacting the Engineer, the Contractor shall have completed the following:

- flagged individual plantings by species with different colored flags per species;

- flagged augering pits with a colored flag to represent each size of auger hole based on the plant species flag;

- restaked any pits that need to be moved, due to their being disturbed by construction;

- have had the Engineer review main line and valves of the irrigation system in the area to be planted.

Once the above is complete the Contractor shall contact the Engineer for review. The Engineer retains the right to require the Contractor to layout additional planting in order to best review the Contractor's layout ability before the Contractor is approved to continue with unguided planting layout. Upon approval from the Engineer, the Contractor may proceed with completing the remaining planting areas.

Remaining Plant Layout - The Contractor shall then flag the location of each plant to indicate directly where they will auger planting holes. Each flag shall designate the center location of each plant and its planting pit. The Contractor shall auger planting pits at each flagged location and install the final surface irrigation runs to the planting pits per the drawings (see Article 41.07, "Irrigation Lateral, Bubbler and Emitter system"). The Contractors second step of implementing the planting plan will be to flag individual plantings by species to provide the position of individual plants on the Project planting site. The Contractor shall use different flag colors and markings to allow for easy identification of each species to be planted. The pattern of flagged plant locations will approximate the plant distribution by species specified on the Drawings.

If any planting pits have to be moved, the Contractor shall dig new pits and supply irrigation to the new location. The Engineer may review the planting pits and reflag the plant species. The contractor may then proceed with the planting.

<u>Creek Planting at Boulders</u>- The design intent for the planting around the boulders is that the plants appear to have naturalized between and around the landscape boulders along the edge of the channel bed. See Article 41.22, "Landscape Creek Boulders".

Digging plant pits, and other elements of the project shall not cause excessive soil compaction. The Contractor shall use equipment and techniques that preserve the 'loosened' condition of the planting areas that was achieved during previous de-compaction activities.

Installation – The Contractor shall only set out as much plant material as can be planted in one day. No plant material shall sit out overnight, unplanted or left partially planted or un-watered overnight.

Avoid damage to containers, wrappings and rootballs. If the rootball is cracked or broken during handling and de-potting, the plant will be rejected. Do not remove plant from container prior to completion of plant pit preparation. Support root ball during installation to prevent cracking or shedding of soil. Excavate plant pits to depth as shown on the Drawings. If rock, underground construction work, tree roots or other obstructions are encountered in the excavation of plant pits, acceptable alternate locations may be used at direction of the Engineer. Scarify sides of plant pit, thoroughly breaking up surfaces and eliminating "glazed" areas. Backfill plant pit to allow for the setting of tree crowns at 2 inches above the finish grade and shrub crowns at 1 inch above the finish grade. Thoroughly foot-tamp all backfill. Position plant in planting the pit, maintaining plumb condition. Maintain throughout all planting operations.

Use native topsoil to backfill (on-grade) plant pits as shown on Drawings and in compliance of Article 41.09.02, “Revegetation Soil Preparation Materials”. Brace each plant plumb and rigidly in position until planting soil has been tamped solidly around the ball and roots. When plant pits have been backfilled approximately 2/3 full, water thoroughly and saturate root ball, before installing remainder of the backfill mix to top of pit, eliminating all air pockets.

Form planting basins centered around plants as dimensioned on the Drawings. Immediately water all plants after completion of planting operations. Where irrigation is to be installed per the Drawings, the irrigation system will be immediately completed to provide watering to the newly planted plant.

Where planting basins occur in flat planting locations, the final settled basin grade shall match that of the surrounding soil. On slopes, the root crown of the plant shall intersect the plane of the slope. All container plants shall be installed vertical and slightly elevated above the basin finish grade per the Drawings. Basins shall slope away from the root crown to drain water away.

Mulch - Spread Landscape Compost within the accepted planting basins of all trees, shrubs, herbs and vines. Place compost 3” thick per Drawings within the basin diameter only. Keep compost 2” clear from edge plant material. After applying compost, apply 1” to 2” of water. Creek planting shall not receive any landscape compost.

41.14.04 Testing

Immediately after completion of excavation, test drainage of typical plant pits (12 per reach: 6 at top of slope and 6 within the vegetated bench) by filling with water twice in succession. Give written notification to the Engineer of conditions permitting the retention of water in plant pits for more than 24 hours. Submit to the Engineer written documentation of all test pit results, dated and signed by the tester.

Within 24 hours of planting each individual site, said sites will be checked for plant settling. The Contractor will take corrective measures to ensure the plant rootball is set according to the Drawings and Specifications.

41.14.05 Submittals

The Contractor shall submit a list of equipment to be used on the Revegetation Area when working within 5.0 feet of the finish grade.

Mulch – A sample of the compost shall be submitted to the District Engineer for review and approval. The Mulch submittal shall include certification of chemical analysis/technical data sheet of the material.

Landscape Compost to be from Z-Best Products, Alex Sharpe (408) 846-1574 or approved equal.

41.14.06 Measurement

Planting shall not be measured.

41.14.07 Payment

Full compensation for furnishing all labor, materials, tools, equipment, and incidentals and for doing all work required for revegetation planting complete in place as shown on the Drawings, as specified in these Specifications and as directed by the Engineer shall be included in the unit price bid per square foot for REVEGETATION PLANTING, Bid Item No. 53 and Bid Additive Item Nos. 79, 116 and 151 if/when included in the awarded project by the District.

41.15 Planting Basins

41.15.01 Scope of Work

Planting basin shall consist of all work necessary for preparing planting basins after augering is complete, after the installation of irrigation. The work shall be completed with minimal disturbance to flags installed as markers for planting locations.

Soil shall be generated from the soil augering that is loose soil, free of air pockets, rocks, clods, and any other debris larger than 2 inches in diameter. See Article 41.09, “Revegetated Soil Preparation.”

41.15.02 Placement

The Contactor shall place soil around each planting location marking flag to form a berm as shown on the Drawings and uniformly compact berm to shape a complete circle with a uniform contour. Planting basin shall be settled to the satisfaction of the Engineer either by repeated filling of the basins with standing water or by "jetting" each. Settling by all methods shall be conducted in a manner such that minimal soil disturbance, and no mixing, nor "boiling" occurs.

Finish elevation of planting basin interior shall be the same as the finish elevation of the surrounding ground. Maintain or reinstall planting location marking flag in place.

41.15.03 Testing

The Engineer shall direct the Contractor to fill randomly-selected planting basin locations with water to observe whether additional settling occurs. If it does, the Contractor shall repeat the flooding or “jetting” process in all locations until settling diminishes to the satisfaction of the Engineer.

The Contractor shall fill all irrigation basins with standing water to 4 inches deep without boiling, gouging, breaching or any disturbance to the soil for inspection of berm integrity by the Engineer. Leaking or unstable berms shall be repaired immediately.

41.15.04 Submittals

Submittals shall be in accordance with Revegetation Planting Article 41.14.05, “Submittals”.

41.15.05 Measurements

Measurement shall not be made for planting basin work.

41.15.06 Payment

Full compensation for furnishing all labor, materials, tools, equipment, and incidentals, and/or doing all work required for Planting Basins complete, in place as shown on the Drawings and as specified in these Specifications shall be included in the unit price per square foot for REVEGETATION PLANTING, Bid Item No. 53 and Bid Additive Item Nos. 79, 116 and 151 if/when included in the awarded project by the District, and no separate payment will be made therefore.

41.16 Plug Planting

41.16.01 Scope of Work

Plug plantings shall consist of all work and materials necessary to install three plugs per basin furnished by the District as shown on these Drawings and as specified in these Specifications. Included in this item of work shall be planting, initial hand watering, replacing plant flags and all other miscellaneous items necessary for the installation of the plugs, as shown on the Drawings and as specified in these Specifications.

41.16.02 Materials

See Plant List on the Drawings for plant species, size, quantity, and other associated information.

Materials shall be in accordance with Revegetation Planting Article 41.14.02, “Materials”.

41.16.03 Placement

Placement shall be in accordance with Revegetation Planting Article 41.14.03, “Placement”.

Plugs shall be placed at a rate of three individual plugs per basin.

41.16.04 Testing and Submittals

Testing shall be in accordance with Revegetation Planting Article 41.14.04, “Testing” and Article 41.14.05, “Submittals”.

41.16.05 Measurement

Plug Plantings shall not be measured.

41.16.06 Payment

Full compensation for furnishing all labor, materials, tools, equipment, and incidentals and for doing all work required for Plug Plantings, complete in place as shown on the Drawings, as specified in these Specifications, and as directed by the Engineer shall be included in the unit price per square foot for REVEGETATION PLANTING, Bid Item No. 53 and Bid Additive Item Nos. 79, 116 and 151 if/when included in the awarded project by the District, and no separate payment will be made therefore.

41.17 Dee-Pot Container Planting

41.17.01 Scope of Work

Dee-Pot container plantings shall consist of all work and materials necessary to install single dee-pot container plants furnished by the District as shown on these Drawings and as specified in these Specifications. Included in this item of work shall be planting, initial hand watering, replacing plant flags and all other miscellaneous items necessary for the installation of the dee-pot container plants, as shown on the Drawings and as specified in these Specifications.

All conditions of Article 41.14, “Revegetation Planting” shall apply to this Section except as noted.

41.17.02 Materials

See Plant List on the Drawings for plant species, size, quantity, and other associated information.
Materials shall be in accordance with Revegetation Planting Article 41.14.02, “Materials”.

41.17.03 Placement

Placement shall be in accordance with Revegetation Planting Article 41.14.03, “Placement”.

The Contractor shall scarify each side of the plant root ball to prevent root bound condition after removing plants from containers. Insert the root ball in the pit without bending or damaging roots. Plants shall be set plumb and braced in a

position until backfill material has been tamped solidly around the root ball. The plant shall be positioned so that the root drawn is set above finished grade, as detailed on the Drawings. The plant shall be immediately watered according to Article 41.06, "Revegetation Planting".

41.17.04 Testing and Submittals

Testing shall be in accordance with Revegetation Article 41.14.04, "Testing", and Article 41.14.05, "Submittals".

41.17.05 Measurement

Dee-Pot container plantings shall be measured on the basis of the number of individual plantings.

41.17.06 Payment

Full compensation for furnishing all labor, materials, tools, equipment, and incidentals and for doing all work required for Dee-pot container planting, and Dee-pot container material, complete in place as shown on the Drawings, as specified in these Specifications, and as directed by the Engineer shall be included in the unit price per square foot for REVEGETATION PLANTING, Bid Item No. 53 and Bid Additive Item Nos. 79, 116 and 151 if/when included in the awarded project by the District, and no separate payment will be made therefore.

41.18 Tree-Pot Container Planting

41.18.01 Scope of Work

Tree Pot container plantings shall consist of all work and materials necessary to install single tall, 1-gallon Tree Pot container plants furnished by the District as shown on these Drawings and as specified in these Specifications. Included in this item of work shall be planting, initial hand watering, replacing plant flags and all other miscellaneous items necessary for the installation of the Tree-Pot container plants, as shown on the Drawings and as specified in these Specifications.

All conditions of Article 41.14, "Revegetation Planting", shall apply to this Section except as noted.

41.18.02 Materials

See Plant List on the Drawings for plant species, size, quantity, and other associated information.

Materials shall be in accordance with Revegetation Planting Article 41.14.02, "Materials".

41.18.03 Placement

Placement shall be in accordance with Revegetation Planting Article 41.14.03, "Placement".

The Contractor shall scarify each side of the plant root ball to prevent root bound condition after removing plants from containers. Insert the root ball in the pit without bending or damaging roots. Plants shall be set plumb and braced in a position until backfill material has been tamped solidly around the root ball. The plant shall be positioned so that the root drawn is set above finished grade, as detailed on the Drawings. The plant shall be immediately watered according to Article 41.14, "Revegetation Planting".

41.18.04 Testing and Submittals

Testing shall be in accordance with Revegetation Planting Article 41.14.04, "Testing" and Article 41.14.05, "Submittals".

41.18.05 Measurement

Tree-pot container plantings shall be measured on the basis of the number of individual plantings.

41.18.06 Payment

Full compensation for furnishing all labor, materials, tools, equipment, and incidentals and for doing all work required for Tree-pot container planting, and Tree-pot container material complete in place as shown on the Drawings, as specified in these Specifications, and as directed by the Engineer shall be included in the unit price per square foot for REVEGETATION PLANTING, Bid Item No. 53 and Bid Additive Item Nos. 79, 116 and 151 if/when included in the awarded project by the District, and no separate payment will be made therefore.

41.19 Treeband Container Planting

41.19.01 Scope of Work

Treeband container plantings shall consist of all work and materials necessary to install single Treeband 2 (TB2) container plants furnished by the District as shown on these Drawings and as specified in these Specifications. Included in this item of work shall be planting, initial hand watering, wood fiber landscaping mulch

application, replacing plant flags and all other miscellaneous items necessary for the installation of the Tree-Pot container plants, as shown on the Drawings and as specified in these Specifications.

All conditions of Article 41.14, "Revegetation Planting", shall apply to this Section except as noted.

41.19.02 Materials

See Plant List on the Drawings for plant species, size, quantity, and other associated information.
Materials shall be in accordance with Revegetation Planting Article 41.14.02, "Materials".

41.19.03 Placement

Placement shall be in accordance with Revegetation Planting, Article 41.14.03, "Placement".

The Contractor shall scarify each side of the plant root ball to prevent root bound condition after removing plants from containers. Insert the root ball in the pit without bending or damaging roots. Plants shall be set plumb and braced in a position until backfill material has been tamped solidly around the root ball. The plant shall be positioned so that the root drawn is set above finished grade, as detailed on the Drawings. The plant shall be immediately watered according to Article 41.06, "Revegetation Planting".

41.19.04 Testing and Submittals

Testing shall be in accordance with Revegetation Planting, Article 41.14.04, "Testing" and Article 41.14.05, "Submittals".

41.19.05 Measurement

Treeband container plantings shall be measured on the basis of the number of individual plantings.

41.19.06 Payment

Full compensation for furnishing all labor, materials, tools, equipment, and incidentals and for doing all work required for Treeband container planting, and Tree-pot container material complete in place as shown on the Drawings as

specified in these specifications and as directed by the Engineer shall be included in the unit price per square foot for REVEGETATION PLANTING, Bid Item No. 53 and Bid Additive Item Nos. 79, 116 and 151 if/when included in the awarded project by the District, and no separate payment will be made therefore, and no separate payment will be made therefore.

41.20 Landscape Planting – Bid Item Nos. 54A, 54B, 54C, 80A, 80B, 80C, 117A, 117B, 117C, 152A, 152B, 152C

41.20.01 Scope of Work

Project landscape plant material shall consist of container grown trees and vines that are to be supplied by the Contract from an approved nursery.

The work required under this Article includes all labor, transportation, tools, equipment, excavation, materials, and other incidentals necessary to execute the required planting work, as shown on the Drawings, specified in these Specifications and as directed by the Engineer for the left bank planting. The Contractor will perform work according to all applicable laws, codes and regulations required by Federal, State and Local authorities.

If significant rain, creek over-banking or groundwater incursion occurs during planting work and the Engineer determines that soil moisture content has exceeded the acceptable workable level, planting work may be temporarily halted. The Engineer shall determine when planting work shall resume.

Examination and Verification of Project Site Conditions: Shall be in accordance with Article 41.14, “Revegetation Planting”

Sequence and Scheduling –Landscape plant material shall be planted between April 15 to October 1 of 2011.

The Contractor shall coordinate the layout of landscape plant material with the Engineer, and with other work as described in this article. The Contractor shall be responsible coordinating the delivery of the container stock. The Contractor shall provide to the Engineer a minimum of 48 hours advance notice of delivery of container stock and coordinate with the Engineer the location of any storage area that may be necessary to hold the plant material.

Landscaping Contractor to coordinate with work of other Contractors/Subcontractors on the site. Delays caused by the Contractor in completing planting operations, which extend the planting into more than two planting seasons shall extend the Warranty Period correspondingly.

41.20.02 Materials

Landscape plant material (vines and trees) are to be provided by the Contractor and not the District.

Condition of Plants - Plants shall be sound, healthy and vigorous, well branched and densely foliated when in leaf. They shall be free of disease, insect pests, eggs, or larvae. They shall have healthy, well-developed root systems. Plants shall be free from physical damage or adverse conditions that would prevent thriving growth. Plants shall be free of dead or dying branches and branch tips, with all foliage of a normal density, size and color. Plants lacking compactness or proper proportions or plants, which are weak or thin, will not be accepted. Plants within a single species, which have been specified to be grown to matching form and sizes, shall not be accepted if disconformity exceeds ten (10) percent of the average.

Samples must prove to be completely free of circling, kinked or girdling trunk surface and center roots and show no evidence of a pot-bound condition. Upon inspection by the Engineer at the job site, if five (5) percent or more of the plants of each species are found to contain kinked, circling or girdling roots, all plants of that species will be rejected. Trees that have damaged or crooked leaders will be rejected. Trees having a main leader shall not have been headed back. Trees with abrasions of the bark, sunscalds, disfiguring knots, or fresh cuts of limbs over 3/4 inch, which have not completely callused, will be rejected.

Storage and Handling – Shall be in accordance with Revegetation Planting Article 41.06.02, “Materials and Placement” for District provided plant material.

Substitutions - Substituted plants shall be true to species and variety and shall conform to measurements specified except that plants larger than specified may be used if accepted. Use of such plants shall not increase Contract price. If larger plants are accepted, increase the ball of earth in proportion to the size of the plant. Plants overgrown for their container size will be rejected.

Mixes – Shall be in accordance with Revegetation Planting Article 41.14.02, “Materials”.

Water - Shall be in accordance with Revegetation Planting Article 41.14.02, “Materials”.

Source and Quality Control – Engineer may observe plant material either at place of growth or at site before planting for compliance with requirements for genus, species, variety, cultivar, size, and quality. Engineer retains right to observe trees and vines further for size and condition of balls and root systems, pests, disease

symptoms, injuries, and latent defects and to reject unsatisfactory or defective material at any time during progress of work. Remove rejected trees or vines immediately from Project site.

Warranty and Replacements – Shall be in accordance with Revegetation Planting Article 41.14.02, "Materials".

Correct Species – Warrant that all plant materials are true to species and variety. Final warranty of plant material shall be based on achieving success requirements described in Article 41.23, "Revegetation & Landscape Establishment Maintenance," of these Specifications.

Failed materials shall be addressed as follows:

A. Repair and/or replace at no cost to the Owner all plant materials exhibiting conditions which are determined as unacceptable due to workmanship by the Contractor.

B. Closely match replacements to adjacent specimens of the same species. Apply requirements of this Specification to replacements.

Incorrect Materials shall be addressed as follows:

A. During Warranty Period, Contractor shall replace at no cost to Owner plants revealed as being untrue to name and species.

B. Contractor shall provide replacements of a size and quality to match the planted materials at the time the mistake is discovered.
Mulch – Shall be in accordance with Revegetation Planting Article 41.14.02, "Materials".

41.20.03 Placement

Plant Layout - The Contractor shall flag individual plantings by species as indicated on the Drawings; review the planting pits; and restaked any pits that need to be moved, due to them being disturbed by construction. The Contractor shall have the Engineer review main line valves and lateral lines of the irrigation system installed in the first season per the Drawings in the area to be planted prior to augering planting pits. If any planting pits have to be moved, the Contractor shall dig new pits and relocate the previously installed subsurface irrigation to the new location. The Engineer shall review and approve the flag location prior to the Contractor proceeding with the planting.

Irrigation trenching, digging plant pits, and other elements of the project shall not cause excessive soil compaction. The Contractor shall use equipment and techniques that preserve the 'loosened' condition of the planting areas that was achieved during previous de-compaction activities.

Installation – To be in accordance to Article 41.14.03 "Placement".

41.20.04 Testing

Immediately after completion of excavation, test drainage of typical plant pits by filling with water twice in succession. Give written notification to the Engineer of conditions permitting the retention of water in plant pits for more than 24 hours. Submit a written proposal and cost estimate to the Engineer for acceptance for the correction of poor drainage conditions before proceeding with planting. Submit to the Engineer written documentation of all test pit results, dated and signed by the tester.

Within 24 hours of planting each individual site, said sites will be checked for plant settling. The Contractor will take corrective measures to ensure the plant rootball is set according to the Drawings and Specifications.

41.20.05 Submittals

Shall be in accordance to Article 41.14, "Revegetation Planting" for District provided plant material.

Provide three (3) samples of each variety and size plant material provided by Contractor, delivered to the site for review and approval by Engineer. Maintain approved samples on-site as a standard for comparison.

41.20.06 Measurement

Planting provided by the Contractor will be measured according to ANSI Z60.1. Do not prune to obtain required size.

41.20.07 Payment

Full compensation for furnishing all labor, materials, tools, equipment, and incidentals and for doing all work required for landscape planting – vines, complete in place as shown on the Drawings, as specified in these Specifications and as directed by the Engineer shall be included in the unit price bid per each for LANDSCAPE PLANTING, Bid Item No. 54A and Bid Additive Item Nos. 80A, 117A and 152A if/when included in the awarded project by the District.

Full compensation for furnishing all labor, materials, tools, equipment, and incidentals and for doing all work required for landscape planting – tree in slope, complete in place as shown on the Drawings, as specified in these Specifications and as directed by the Engineer shall be included in the unit price bid per each for LANDSCAPE PLANTING, Bid Item No. 54B and Bid Additive Item Nos. 80B, 117B and 152B if/when included in the awarded project by the District.

Full compensation for furnishing all labor, materials, tools, equipment, and incidentals and for doing all work required for landscape planting – tree in maintenance road, complete in place as shown on the Drawings, as specified in these Specifications and as directed by the Engineer shall be included in the unit price bid per each for LANDSCAPE PLANTING, Bid Item No. 54C and Bid Additive Item Nos. 80C, 117C and 152C if/when included in the awarded project by the District.

41.21 Mulch (Landscape Compost) See Article 41.14, "Revegetation Planting"

41.22 Landscape Creek Boulders – Bid Item Nos. 55, 81, 118, 153

41.22.01 Scope of Work

Landscape creek boulders shall consist of all labor, equipment, and materials necessary to furnish and place half-ton and one-ton rocks, and earth material as shown on the Drawings, as specified in these Specifications, and as directed by the Engineer.

41.22.02 Materials

Half-ton and one-ton rocks for landscape boulders shall be Class 1T rock conforming to the provisions of Section 72-2, "Rock Slope Protection", of the State Specifications, except as modified in these specifications under Article 31.03, "Slope Toe Protection".

Landscape boulders shall be earth tone and dark gray or brown in color. Landscape boulders shall be free of concrete rubbles, deleterious or organic materials and debris, and uncontaminated with regulated materials, obtained from clearing and grubbing activities as described in Article 22.02, "Clearing and Grubbing" or from a source approved by the Engineer.

Earth material for backfilling voids between landscape boulders shall be native soil as described in Article 41.09, "Revegetation Soil Preparation" of these Specifications and smaller ¼ ton rocks in Article 31.01, "Rock Slope Protection".

41.22.03 Placement

Channel excavation and embankment for preparing subgrade to install Landscape Boulders shall be in conformance with, and paid for, as specified in Article 23.01.01, "Channel Excavation," and Article 23.01.02, "Channel Embankment," of these Specifications.

Contractor shall coordinate with the Engineer to plan the location in the field for the Landscape Boulders, per shown on the Drawings, prior to delivery of the boulders.

Landscape boulders shall be placed in clusters creating groups of the half-ton and one-ton rock outcrops in a natural formation such that smaller rocks nestle around larger rocks to appear that nature has weathered the rocks into their position over time. It is acceptable to leave voids between the boulders close to the bank in order to plant between them. Some blending between the ¼ ton rock rip rap area may need to occur with additional ¼ ton rocks or ½ ton rocks to achieve a natural transition between the rip rap and the boulder outcrops. It is also acceptable to leave ample space between the boulders blended into the rip rap bank and any boulders closer toward the center of the creek in order to encourage water flow around them, as shown on the Drawings. The design intent for the planting around the boulders is that the plants appear to have naturalized between and around the landscape boulders along the edge of the channel bed. Below are placement guidelines to follow:

- Locate three to five boulders in a triangular configuration in staggered groups or clusters along a very shallow run. Clusters to be integrated into the ¼-ton rip rap scour protection bank and to be located off the bank near the center of the creek. Use the Drawings as a guideline for location.

- Where boulders are located adjacent to ¼-ton rip rap rocks, nestle larger landscape boulders into bank and add additional smaller rocks around the larger rock to transition smoothly from the bank to the landscape boulder clusters.

- Allow separation between 'bank' boulders and 'creek' boulders for water to flow around the boulders to help form eddies or vortices in the wake. Space about 1 diameter of the boulder between adjacent boulder.

- Boulders should occupy <10% of the flow area at bank-full flow.

- Avoid placement in unstable, sandy sections of the creek.

- Do not place boulders directly behind another boulder upstream, this will have minimal benefits for creating a wake. Successive boulders downstream shall be placed at the periphery of the wake of upstream boulders.

Placement from the maintenance road with a large excavator incorporating a clam shell bucket attachment is a preferred method. Boulders are not to be end-dumped from the bank into the creek.

The agreed upon boulder locations shall be excavated in preparation for the boulder placement, such that the half-ton and one-ton rocks will be placed at a depth of ¼ to 1/3 of the boulder's diameter.

After the boulders are in-place, backfill with native topsoil and vibrate the native topsoil into the voids.

41.22.04 Testing

The Contractor shall provide two (2) tested samples of boulders, at least five (5) tons of each size, meeting the specified gradation. One (1) sample shall be provided at the quarry and the other sample shall be placed at the construction site and may become part of the finished rock section. These samples shall be used as frequent reference for judging the gradation of the rock supplied. Any difference of opinion between the Engineer and the Contractor shall be resolved by checking the gradation of the truckload of rock against the sample.

Mechanical equipment, a sorting site, and labor needed in checking gradation shall be provided by the Contractor at the Contractor's expense.

41.22.05 Submittals

Contractor shall provide for source supplying boulders, in advance of its use on the project, all equipment, labor, and a sorting site necessary to perform gradation tests in the presence of the Engineer. A copy of the results of the test will be submitted to the Engineer for approval.

41.22.06 Measurement

Measurement of landscape boulders for payment purposes shall be in tons, and shall conform to the provisions of Section 9-1.01, "Measurement of Quantities", of the State Specifications.

41.22.07 Payment

Full compensation for furnishing all labor, materials, tools, equipment, and incidentals for doing all work furnish and place landscaping creek boulders complete, in place as shown on the Drawings, as specified in these Specifications, and as directed by the Engineer, shall be included in the unit price bid per ton for LANDSCAPING BOULDERS, Bid Item No. 55 and Bid Additive Item Nos. 81, 118 and 153 if/when included in the awarded project by the District.

41.23 Revegetation and Landscape Establishment and Maintenance —Bid Item Nos. 56, 82, 119, 154

41.23.01 Scope of Work

Revegetation and Landscape establishment maintenance shall consist of furnishing all labor, materials, tools, equipment, and incidentals to provide all services and materials as specified in these Specifications, and as directed by the Engineer. The contractor will be responsible for at a minimum the following:

A. Promoting the establishment of plants that are healthy and vigorous at the end of the 3 year maintenance period;
B. Maintain and repair all erosion control;
C. Weed control;
D. Pest and rodent control;

E. Maintain, adjust and repair, the irrigation system;
F. Adjust irrigation schedules as weather conditions change and as plants become established;
G. Provide manual irrigation of hydroseeded areas or areas that have had erosion control repair work done as necessary;
H. Documentation of all maintenance procedures in a log book, irrigation system repairs and adjustments to schedule, including mortality counts and reports, erosion control repairs, pruning, planting basin maintenance, weed, pest and rodent control and all other tasks that are necessary to maintain the project site.

The requirement of the revegetation planting and irrigation maintenance work is to have healthy and vigorous plants at the end of the Maintenance Period that are developing the ability to survive without irrigation or other maintenance actions.

The requirement of the landscape planting and irrigation maintenance (trees and vines) work is to establish and maintain permanent planting and irrigation that will be maintained by the District for many years to come after the 3 Year

Establishment Maintenance Period. Wherever possible, these plantings should consist of the original plant materials installed during the first and second year of planting. Replacement plantings that may be required during the Maintenance Period may require additional maintenance actions beyond the Maintenance Period. If it is determined by the Engineer that a sufficient quantity of the original plantings did not survive through the Maintenance Period due to Contractor negligence, the Contractor will be required to provide additional maintenance at no additional cost.

The Maintenance Period will be the plant establishment period beginning on the first day after acceptance of the all planting and irrigation installation as specified in Articles 41.02, 41.14 & 41.20 and extending for three (3) years for the duration of the Contract period to ensure conformance with performance criteria. Upon written request from the Contractor, the Engineer, may approve the start of a Maintenance Period for the revegetation and landscape planting and irrigation in phases. If such phases are approved in writing by the Engineer, the Maintenance Period as specified herein shall be performed for the required duration for each phase. The Contractor must submit a written request and receive the Engineer's approval for each desired phase. The Contractor shall be responsible for maintaining all plants installed under this contract, including container plants, hydroseed, broadcast seed, and cuttings as well as the irrigation system as required achieving the performance criteria. Maintenance operations shall include, but are not limited to: weed, pest and rodent control; corrective pruning; irrigation system operation and maintenance; hand watering; replacement planting; reseeding cover of planting areas; preparing plant establishment forms; removal and disposal each site visit of all trash that has accumulated; reapplication of wood mulch (as needed); provision of yearly mortality counts; repair of damage from flooding; protection of embankments and channel from erosion; filling of monthly maintenance log; and preparing and maintaining record drawings.

The goal of the planting actions is to have healthy and vigorous plants at the end of the Maintenance Period that are developing the ability to survive without irrigation or other maintenance actions. Whenever possible, these plantings should consist of the original plant materials installed during the Construction Period. Replacement plantings that may be required during the Maintenance Period may require additional maintenance actions beyond the Maintenance Period. If it is determined by the Engineer that a sufficient quantity of the original plantings did not survive through the Maintenance Period due to Contractor negligence, the Contractor shall be required to provide additional maintenance at no additional cost.

Contractor Qualifications - The revegetation and landscape maintenance labor force shall be thoroughly familiar with, and trained in, the work to be

accomplished and shall perform the task in a competent, efficient manner acceptable to the Engineer. The Contractor shall follow the requirements below and have the following minimum qualifications:

A. A California C-27 Contractor's License in good standing with no complaints on file.
B. A minimum of five years of revegetation maintenance work in stream banks or riparian settings of similar nature to this project.
C. The foreman or superintendent assigned to this project shall have the same experience qualifications.
D. The foreman or superintendent shall directly supervise the work force at all times. Notify Owner of all changes in supervision.
E. Provide proper identification at all times for Contractor's landscape maintenance vehicles and labor force.

Project Site Conditions – At the beginning of the Three Year Establishment Maintenance Period, Contractor shall walk the site with the Engineer to clarify scope of work and understand existing project site conditions. The Contractor shall document general condition of existing plant material recording all that are healthy, thriving, damaged, dead or dying.

The Contractor shall document the general condition of existing irrigation system, making sure that all faulty controllers, broken or inoperable equipment is repaired prior to the start of the maintenance period and make periodic inspections of surface drainage to ensure clear flow lines (removal of sediment buildup); Repair of surfaces that have been damaged by erosion, rodents, vehicles or other causes.

Sequence and Scheduling - Perform all maintenance during hours mutually agreed upon between Engineer and Contractor. The first year of the Three Year Establishment Maintenance shall begin on the first day following approval of the Contractor's requested Phase. The minimum frequency for Contractor's site visits during the Maintenance Period shall be the following:

March 1 through September 30
Year 1 – once every week
Year 2 – once every ten (10) calendar days
Year 3 – once every two (2) weeks

October 1 through February 28
Years 1, 2, and 3 – every two weeks

Performance Criteria – At the end of the Three Year Establishment Maintenance Period for each Phase, the District will assume the maintenance responsibility for the respective Phase. For revegetation planting, the following criteria shall be met

by the end of the Three Year Maintenance Period to evaluate the compliance of the revegetation and landscape maintenance period.

Mortality rates and plants in poor health and vigor counted in the eighth month of the last year of the Three Year Establishment Maintenance Period shall be used to determine if the Three Year Establishment Maintenance Period will be extended. Plant health and vigor will be evaluated as described in the following monitoring and reporting section. Mortality rates and or plants in poor health and vigor exceeding the percentages below will extend the Establishment Maintenance Period as follows:

Revegetation Plantings:

A. If the mortality and/or poor health rate is less than 15% the maintenance period will be not be extended.
B. If the mortality and/or poor health rate is between 15% & 20% the maintenance period will be extended by six months to allow for replacement plant establishment
C. If the mortality and/or poor health rate is between 21% & 25% the maintenance period will be extended by one year to allow for replacement plant establishment
D. If the mortality and/or poor health rate is over 25% the maintenance period will be extended by two years to allow for replacement plant establishment

Landscape Plantings:

A. 100% of all landscape trees and vines are healthy and vigorous at the end of the second year of the Three Year Establishment Maintenance Period.
B. Any trees or vines that are replaced during the third year must have a minimum of one year of Establishment Maintenance. The extension of maintenance will be one year from the time of replacement.

The above extension of maintenance time is from the date of the scheduled completion of the Three Year Establishment Maintenance Period. The Contractor shall bear all costs related to any extension of the Establishment Maintenance Period. The Engineer will evaluate and confirm the accuracy of the mortality and plants in poor health rates and make the determination of any extensions to the Three Year Establishment Maintenance Period.

Monitoring and Reporting:

The Contractor shall conduct annual plant monitoring to evaluate the plants in August or September each year of the Three Year Establishment Maintenance

Period. The Contractor shall submit results to the District for review. The results will be verified by the District Engineer who will advise the Contractor of corrective actions required to meet the required plant survivorship performance standards for the project. The Contractor solely shall be responsible for achieving the performance criteria noted in these Specifications.

To maintain adequate planting cover each year, the Contractor shall be responsible for ensuring plant health and vigor. The three categories that will be used to evaluate plant health and vigor are; plant foliage, wood, and root crown. Healthy plants will be those that are free of disease. Vigorous plants will be those that are robust, or physically strong. During the Three Year Establishment Maintenance Period the Contractor will be responsible for providing plants that, at a minimum, receive a 'good' rating. A 'good' rating shall be defined as a plant that has no more than between 25%-49% of the foliage, wood, and root crown being affected by symptoms of poor health (eg; diseased foliage, wood or root crown; leaf or stem dieback; wildlife or insect damage).

The Contractor shall be responsible for checking the foliage of each plant for symptoms of disease, size color, wilting defoliation, new growth, browsing by wildlife, insect damage, and vandalism; and taking corrective actions as required. The Contractor shall be responsible for checking the wood of each plant for symptoms of disease, browsing by wildlife, insect damage, girdling, structural deformities, die-back and sunburn; and taking corrective actions as required. The Contactor shall be responsible for checking the root crown of each plant for symptoms of disease, girdling, insect damage, and die-back; and taking corrective actions as required.

The Contractor shall be responsible for anticipating corrective actions required to meet the performance requirements for this project, including procuring and installing replacement plantings, according to this Article.

During maintenance operations, the Contractor shall examine conditions of plants, plant identification tags, weak growth, stability of water basins, and examine soil moisture around each plant to ensure that the irrigation system is providing appropriate moisture to each plant during the irrigation season. The Contractor shall be responsible for corrective measures to ensure that all said items are maintained as installed according to the Drawings and these Specifications. All maintenance activities and observations shall be recorded in monthly plant establishment forms, according to this Article.

The District Engineer may conduct interim inspections and bring deficiencies to the Contractor's attention at any time.

The Contractor shall ensure site drainage in planting areas. At no time shall ponding of water be allowed on the site due to local runoff; the Contractor shall be responsible for control of water.

The Contractor shall be responsible for 100 percent of the remediation efforts required due to fire, vandalism, and other damages to meet the performance requirements of this Section.

41.23.02 Landscape Planting Maintenance

Scope of Work

Landscape Planting Maintenance consists of the Trees planted along the left bank with permanent irrigation and the vines planted along the walls.

A. The trees shall be maintained with a healthy strong structure. Trees are not to be staked.
B. The vines shall be trained to attach to the wall or if necessary by the use of cables attached to the eyebolts installed on the wall per the drawings. The Contractor shall install 3 rows of wire initially as part of the construction contract. Additional rows are to be added as needed by the Contractor during the maintenance period as the vines continue to grow to encourage the vine to cover the wall in order to prevent graffiti vandalism.

Materials and Placement

General - Protect all new planting areas from damage of all kinds from beginning of work until sufficiently established or until Final Acceptance. Provide temporary protection fences, barriers and signs as required for protection. Immediately treat or replace all plants, which become damaged or injured as a result of Contractor's operations or negligence, as directed by the Engineer, at the Contractor’s expense. Replacement plants shall match source, size, condition and variety of plants specified in the original Drawings and specifications.

Execution

A. All materials shall match the original specified materials as they are specified in all other Articles or Sections.

B. Contractor shall submit to the Engineer manufacturer’s literature, label, and laboratory analysis results of all compost used in revegetation planting on this project. Contractor shall also submit one (1) pound sample of compost for approval before each application.

C. If sediment enters basins and buries the trunk of trees or vines to any depth, it shall be removed within twenty-four hours and the source of the sediment repaired.

D. Basin mulch shall be renewed to specifications by October 1 of each year. If renewal mulch is different than that used during installation, a new submittal and approval is required.

E. Planting Basins: Maintain all watering basins around plants so that enough water can be applied to establish moisture through major root zones. For supplemental hand watering of watering basins, use a water wand to break the water force. Do not permit use of "jet" type watering equipment. Do not permit crown roots to become exposed to air through dislodging of soil.

F. Pruning

a. Trees are not to be staked. Prune to encourage strong trunks with uniformly spaced branching. Gradually cut off lower limbs on the maintenance road side of the tree for truck access. Ideally there will be 12 foot clearance height for equipment access at the end of the Three Year Establishment Maintenance Period.

b. Prune vines to encourage vertical growth and not spreading on the ground.

Replacement

A. Replacement plants for the landscape plantings (vines or trees) shall be provided at the contractors expense and shall be planted as soon (within 10 days) as it is determined that a tree or vines has declining health or died.

B. Dead plant material shall be replaced at the Contractor’s expense.

C. In the event that channel flows cause damage to the project site, the Contractor shall be responsible for removing debris from within and between planting basins, repairing planting basins, and replacing mulch both within and between basins.

41.23.03 Revegetation Planting Maintenance

Revegetation Planting Maintenance consists of all plants planted along the right bank with temporary irrigation.

Revegetation trees and shrubs shall be maintained with a healthy strong structure. Trees are not to be staked. Prune to encourage strong trunks with uniformly spaced branching.

Materials and Placement

General - Protect all new planting areas from damage of all kinds from beginning of work until sufficiently established or until Final Acceptance. Provide temporary protection fences, barriers and signs as required for protection. Immediately treat or replace all plants, which become damaged or injured as a result of Contractor's operations or negligence, as directed by the Engineer, at the Contractor's expense. Replacement plants shall match source, size, condition and variety of plants replaced.

Execution

A. All materials shall match the original specified materials as they are specified in all other Articles or Sections.

B. Contractor shall submit to the Engineer manufacturer's literature, label, and laboratory analysis results of all compost used in revegetation planting on this project. Contractor shall also submit one (1) pound sample of compost for approval before each application.

C. Contractor shall submit to the Engineer an annual mortality count report by August 1 of each year.

D. If sediment enters basins and buries the trunk of trees and shrubs to any depth, it shall be removed within twenty four hours and the source of the sediment repaired. Sediment deposits of other species shall be removed if water-holding capacity of the basin is reduced by one-third (1/3) or more, or if plant decay or mulch decomposition occurs.

E. Basin mulch shall be renewed to specifications by October 1 of each year. If renewal mulch is different than that used during installation, a new submittal and approval is required.

F. Culling of new plants may be required by the Engineer at any time throughout the Three Year Establishment Maintenance Period. The Engineer may request culling of plants: should plant densities reach success higher than expected; if they are growing too close to one another to allow healthy growth; and to reduce or promote the growth of a plant. Contractor shall accomplish this by cutting the trunk or main stems just below grade in root tissue to effect a kill, or above grade to stimulate bush regrowth, All cuttings shall be disposed of

offsite. The Contractor shall be responsible for culling operations as directed by the Engineer. The Contractor's performance requirements shall be adjusted by the Engineer to reflect the culling operations. Culling operations may be required in more than one event.

G. Planting Basins: Maintain all watering basins around plants so that enough water can be applied to establish moisture through major root zones. For supplemental hand watering of watering basins, use a water wand to break the water force. Do not permit use of "jet" type watering equipment. Do not permit crown roots to become exposed to air through dislodging of soil.

H. Resetting: Reset plants to proper grades and upright position.

I. Pruning: Prune revegetation trees to eliminate diseased or damaged growth, and narrow V-shaped branch forks that lack strength. No stripping of lower branches ("raising up") of young trees will be permitted. Prune damaged trees or those that constitute health or safety hazards at any time of year as required. Take extreme care to avoid transmitting disease from one infected plant to another. Properly sterilize pruning tools before going from one infected plant to all other plants.

J. Replacement: Engineer shall determine the species and size of replacement plants based on mortality counts during annual monitoring. Replacement plants will be supplied by the District at the end of the first year established to ensure consistency in quality and watershed origin, and should be installed between October and February. Plant material that needs to be replaced after year one will be provided at the Contractors cost including labor equipment and materials. Replacement plant material shall be of the same origin and source as the original plant material specified.

K. Dead plant material shall be replaced at the Contractor's expense if plant survivorship falls below criteria herein.

L. In the event that channel flows cause damage to the project site, the Contractor shall be responsible for removing debris from within and between planting basins, repairing planting basins, and replacing mulch both within and between basins. Also see Article 41.23.05.

41.23.04 General Landscape and Revegetation Maintenance Operations

A. Regrowth of vegetation from neighboring properties, which overhangs into the project, shall be cut back in accordance with clearance requirements. The right of way wall or fence shall be cleaned off completely. Such pruning shall

be done wherever and whenever top-of-bank passage becomes restricted. In addition, overgrowth shall be removed back to the right-of-way line before it enters the planting basins or blocks light from reaching the mitigation plants. At minimum, right of way line clearing shall occur in the fall and be completed by November 1 of each year.

B. Weed control and rodent control shall be per Section 41.25and 41.26.

C. Contractor shall clear all trash that has accumulated on-site and dispose of it off-site during each visit.

D. Contractor shall inspect the planting areas for signs of vandalism and immediately notify the District if vandalism is found. Repair or replacement due to vandalism shall be 100% the Contractors responsibility.

41.23.05 Post High Creek Flow and Major Event Maintenance

Large areas within the project limits will be subject to periodic High Flows which are considered normal during every winter. Such flows will impact the revegetation and landscape plantings and planting elements and will require corrective maintenance during either construction or the three year establishment maintenance period.

High Flow/Major Events – In the event that the plants or landscape features such as irrigation are lost or severely damage (as determined by the Engineer), as a result of storm water flows from the creek into the planting areas, the Contractor shall be responsible for the cost of replacing certain items as outlined below. To clearly establish a measurement for when the water level is considered “high flow” versus “major event”, the reference water level shall be defined as three (3) feet above the 5’ wide revegetation bench elevation.

1. High Flow – Where water flow levels remain at or below the reference water level, the Contractor shall bear the cost of replacing 100% of the damaged or lost materials that were originally installed below this level. Replacement/repair shall be performed by the Contractor per the drawings and these Specifications.

2. Major Event – Where water flow levels exceed the reference water level, the Contractor shall bear the cost of replacing 100% of lost and damaged materials at or below the water reference level and 10% of the original quantity of lost and damaged materials for the area damaged above the reference water level. Replacement/repair shall be performed by the Contractor per the drawings and these Specifications.

3. The Contractor shall not be responsible for the costs associated with the repair and replacement of the irrigation system damage above the reference water level, if damaged in a major event, but shall be responsible for the cost associated with the repair and replacement of the irrigation system damage below the reference water level in both high flows and major events. Damaged or lost materials that occur are to be replaced/repaired by the Contractor per the drawings and these Specifications.

4. The contractor shall perform the following within five days after the flows subside:

   A. Resiting or replacement of 100% of the originally planted plants
   B. Removal of debris and trash deposited on plants
   C. Re establishment of planting basins due to scour or soil deposits
   D. Repair to temporary above ground or permanent sub-surface irrigation systems

41.23.06 Submittals

A. Contractor shall record all maintenance activities and observations in maintenance logbook, including date, area, materials, and man-hours. Logbook shall document site conditions, overall health of plant material, early stage insect or disease infestations, cultural problems promoting plant decline, vandalism, erosion and control measures, mulch renewal, and pruning.

B. During the Revegetation and Landscape Establishment Maintenance Period, Contractor shall submit the maintenance logbook to the Engineer by the first week of each month. Submittals and shop drawings shall be required for approval prior to start of any work for which detailed specifications are not provided herein.

41.23.07 Inspection

Monthly Inspections – Contractor and the Engineer shall inspect the project site together monthly to review the Contractor's compliance with these specifications. At the completion of each monthly inspection, the Engineer will provide the Contractor with a punch list of items to be corrected and the Contractor shall have five (5) calendar days to complete them.

Annual Inspections – Annual inspections shall be conducted once each year of the maintenance to review the Contractor's compliance with these specifications. The

Contractor and the Engineer shall be present and shall convene on one mutually agreed upon fall day.

Final Inspection – A final inspection of the project shall be conducted during the first two (2) weeks of the last month of the maintenance. At the completion of the inspection, the Engineer will provide the Contractor with a punch list of items to be completed, and the Contractor shall complete the items on the punch list prior to the end of the maintenance. The contactor shall be responsible for any resulting extension of the Contract Period due to incompletion of the punch list items, and shall do so at no additional cost (see performance criteria). The Engineer will grant Notice of Acceptance for completion of the Contract to the Contractor upon satisfactory completion of the items on the punch list.

Mortality Count – Each August the Contractor shall complete a mortality count and report the number and percent of live and dead plants of each species in each planting area and in the entire project. Dead plants or empty planting sites shall be marked with flagging tape or pin flags.

41.23.08 Measurement

A. Plant material survival rate shall be per the performance criteria in article

B. Survival plant counts shall occur annually on the anniversary date one (1) year from the date of acceptance of installation.

41.23.09 Payment

A. Full payment for furnishing labor, materials, tools, equipment, and incidentals including monitoring to perform revegetation maintenance and landscape planting maintenance the irrigation system maintenance as called for on the Drawings, as specified in these General Landscape and revegetation maintenance operations, post high creek flow monitoring, weed control, insect pest and rodent control, hydroseed and erosion control blanket maintenance specifications and as directed by the Engineer during the Three Year Establishment Maintenance Period shall be included in the lump sum bid for REVEGETATION and LANDSCAPE ESTABLISHMENT and MAINTENANCE, Bid Item No. 56 and Bid Additive Item Nos. 82, 119 and 154 if/when included in the awarded project by the District.

B. Note that the Contractor is responsible for paying for all water used during the Three Year Establishment Maintenance Period.

C. Monthly payments will not be made until the maintenance logbook has received favorable review by the District.

41.24 Irrigation System Maintenance

41.24.01 Scope of Work

Contractor shall provide all labor, materials, tools, equipment and incidentals to maintain the temporary and permanent irrigation system, as installed, in working condition such that adequate water is supplied to plant materials.

The Three Year Establishment Maintenance Period may be extended by the District if the project is improperly maintained, appreciable replacement is required, or other corrective work becomes necessary. Costs incurred due to damage or replacement during the Three Year Establishment Maintenance Period shall be the responsibility of the Contractor. Maintenance personnel must understand the cultural requirements of the species they are maintaining so that the plants are not over watered or desiccated by improper use of the irrigation system.

Monthly maintenance operations shall include, but are not limited to: repairing without additional charge to the District, all damages to system caused by Contractor's operations within one (1) watering period; reporting promptly to the Engineer all accidental damage not resulting from the Contractor's negligence or operations; and probing twice a month, with a water probe or other acceptable tool, rootball moisture of representative plants as well as the surrounding soil.

Sequence and Scheduling – The first year of the Three Year Establishment Maintenance Period shall begin on the first day following acceptance of the installation phase. The minimum frequency for Contractor's site visits during the Three Year Establishment Maintenance Period shall be the following:

A. March 1 through September 30:
Year 1 – once every week
Year 2 –once every ten (10) calendar days
Year 3 – once every two (2) weeks

B. October 1 through February 28:
Year 1, 2, and 3 –every two weeks

Execution

Contractor shall operate the irrigation system automatically and shall properly and completely maintain all parts of the irrigation system.

It is the sole responsibility of the Contractor to develop the irrigation schedule for all times of the year and make adjustments as necessary throughout the year for the duration of the Three Year Establishment Maintenance Period.

The Irrigation schedule shall be submitted to the Engineer for review and comments. The Contractor shall collaborate with the Engineer on the schedule to achieve the desired outcome; however it is the Contractor's responsibility to meet the project goals of establishing a revegetated planting area that can be self-sustaining without supplemental irrigation after 4-5 years.

In Year 1, the revegetation plants shall be irrigated with enough regularity (approximately two [2] to four [4] times per month), from March through October, to keep the soils within the root zone moist.

The irrigation schedule for the revegetation plants in Year 2 will be based on the water requirements of the plants and is anticipated to be substantially less (approximately one [1] to two [2] times per month).

In Year 3, the revegetation plantings will require little irrigation (zero [0] to one [1] time per month) will be required. Actual irrigation on site may vary depending upon the conditions of the plants and per the recommendations of the Engineer.
The irrigation for the landscape plants (trees and vines) will require watering more frequently than the revegetation plantings. During the first year they may require water daily during dry hot months. At the end of the Three Year Establishment Maintenance Period the schedule should be cut back to two to three times per month.

Precise irrigation requirements will be determined through site observations using an adaptive management approach toward irrigation.

It is the Contractors responsibility to routinely check filter systems and battery life on the revegetation valves.

41.24.02 Submittals

A. Contractor shall record all maintenance activities and observations in maintenance logbook, including date, area, materials, and man-hours. Logbook shall document site conditions, adjustments to the irrigation schedule and changes or repairs to the irrigation system. Logbook shall be submitted to the Engineer.

B. During the Three Year Establishment Maintenance Period, Contractor shall submit the maintenance logbook to the Engineer by the first week of each

month. Submittals and shop drawings shall be required for approval prior to start of any work for which detailed specifications are not provided herein.

C. Contractor shall submit to the Engineer a record of all irrigation activities and schedule or volume changes on a valve-by-valve basis and by planting types and their variations and shall include an estimate of the total quantity of water applied per month to the entire site, in an up-to-date maintenance logbook.

D. Contractor shall submit to the Engineer written information regarding programming of the irrigation system prior to completion of the maintenance contract.

41.24.03 Inspections

Monthly Inspections --- Contractor, and the Engineer shall inspect the project site together monthly to review the Contractor's compliance with these specifications. At the completion of each monthly inspection, the Engineer will provide the Contractor with a punch list of items to be corrected and the Contractor shall have ten (10) calendar days to complete them.

Annual Inspections --- Annual inspections shall be conducted once each year of the maintenance to review the Contractor's compliance with these specifications. The Contractor, and the Engineer shall be present and shall convene on one mutually agreed upon fall day.

Inspections and maintenance shall include cleaning of the low flow valve filtration system and the life of the battery on the revegetation valves.

Final Inspection --- A final inspection of the project shall be conducted during the first two (2) weeks of the second to the last month of the maintenance. The final inspection shall include a final test of the irrigation system. At the completion of the inspection, the Engineer will provide the Contractor with a punch list of items to be completed, and the Contractor shall complete the items on the punch list prior to the end of the maintenance. The Engineer will grant Notice of Acceptance for completion of the Contract to the Contractor upon satisfactory completion of the items on the punch list.

Contractor shall contact the Engineer prior to reprogramming the controller or shutting down the controller at the end of the irrigation season. After the controller has been reprogrammed, and at the start of each irrigation season, the Contractor shall demonstrate, at the Engineer's request, the individual run times and days for the irrigation stations.

A. Contractor shall demonstrate the full operation of the irrigation system in the field to the Engineer prior to completion of the maintenance contract.

41.24.04 Measurement

Measurement of the area for revegetation and landscape establishment and maintenance shall be per square foot of completely installed and District accepted planting by the Contractor and approved by the Engineer as measured in the field.

Measurement of watering shall be per month of an adequate irrigation schedule to promote self sustainability of plantings. The Engineer will monitor water usage by reviewing the Contractor's up-to-date maintenance logbook.

41.24.05 Monitoring

The Contractor shall: monitor the irrigation systems to verify that they are functioning properly as designed and making program adjustments required by changing field conditions; clean filters and strainers as often as necessary to keep the irrigation systems free of sand and other debris; and adjust nozzles and/or emitters as necessary to provide required coverage.

Cleaning – Contractor shall: dispose of, off-site, all pruned material and/or refuse resulting from maintenance practices; remove from the site all containers and evidence of maintenance activities.

Project Close Out Submittal - Landscape Maintenance Record: Submit binder to Owner with all documentation and records required and utilized during the maintenance period. Return all keys and identification materials supplied by Owner for the purpose of site access.

41.24.06 Payment

A. Full payment for furnishing labor, materials, tools, equipment, and incidentals to maintain the irrigation system, in working condition during the Three Year Establishment Maintenance Period complete, in place as shown on the Drawings, as specified in these Specifications and as directed by the Engineer shall be included in the lump sum bid for REVEGETATION and LANDSCAPE ESTABLISHMENT and MAINTENANCE, Bid Item No. 56 and Bid Additive Item Nos. 82, 119 and 154 if/when included in the awarded project by the District, and no separate payment will be made therefore.

B. Note that the Contractor is responsible for paying for all water used during the Three Year Establishment Maintenance Period.

C. Monthly payments will not be made until the maintenance logbook has received favorable review by the District and until all areas within the project limits meet these specifications for irrigation operations.

41.25 Weed Control

41.25.01 Scope of Work

Contractor shall provide all labor, materials, tools, equipment, and incidentals for providing weed control. The Establishment Maintenance Period may be extended by the District if the project is improperly maintained, appreciable replacement is required, or other corrective work becomes necessary. Costs incurred due to damage or replacement during Establishment Maintenance Period shall be the responsibility of the Contractor. Contractor's weed control personnel shall be able to identify and shall avoid and protect vegetative offshoots of all project plantings. Native plants which enter the planting areas as volunteer seedlings or by spillover from adjacent natural areas shall be protected and their expansion encouraged. Poison oak shall be allowed to spread into the project to the extent that worker safety can be maintained.

All herbicide applications shall conform to the District's Pesticide Policy, Appendix G, and comply with Federal, State and Local Regulations. The Engineer, prior to application, shall approve all herbicide use. Herbicide applications shall be applied by a Licensed Applicator consistent with a written recommendation from a State-Licensed Pest Control Advisor and in accordance with all label instructions.

Sequence and Scheduling – The first year of the Three Year Establishment Maintenance Period shall begin on the first day following acceptance of the installation phase. The minimum frequency for Contractor's site visits during the Post-Installation 3 Year Maintenance shall be the following:

A. March 1 through September 30
   Year 1 – once every week
   Year 2 – once every ten (10) calendar days
   Year 3 – once every two (2) weeks

B. October 1 through February 28
   Years 1, 2, and 3 –every two weeks

41.25.02 Materials

A. Pesticide shall be insecticide, herbicide, fungicide, nematocide, rodenticide, and miticide.

B. Pesticide materials shall be delivered to the site in the original unopened containers bearing legible labels indicating the Environmental Protection Agency (EPA) registration numbers.

C. Pesticide materials shall be approved for use in or near aquatic environments. Contractor shall submit product specification for approval by the District Engineer.

41.25.03 Placement

The following species are considered noxious weeds under this specification and will be removed when ever found in the project area immediately:

Scientific Name	Common Name
Arundo donax	Giant Reed
Lepidium latifolium	Perennial Pepperweed
Centaurea Solstitialis	Yellow Star-Thistle
Cynocdon dactylon	Bermudagrass
Delaria odorata	Cape Ivy
Picris echioides	Bristly Ox-Tongue
Convolvulus arvensis	Field Bindweed
Festllca Arundinacea	Tall Fescue
Ditrichia graveolens	Stinkweed

This list is not inclusive, and other noxious weed species may be present and should be removed.

All invasive plant species as identified and directed by the Engineer will be eradicated from the site during site preparation, plant installation, and site maintenance.

Prior to any herbicide application the Contractor shall submit to the District vegetation management unit all pest control recommendations for review and approval.

Weeds shall be kept at a height no greater than 4-inches and removed prior to formation of seed throughout the site during the Establishment Maintenance Period.

Weed control efforts shall promote growth of revegetation plants, maintain an aesthetic project appearance, and minimize fire danger.
Grassy slopes – Broadleaf weeds in grassy slopes shall be controlled/killed before they reach 6 inches in height or before flowering. These areas shall be treated with a District approved herbicide. Engineer shall be notified no less than 48 hours prior to the time of application.

Planting basins – will be kept weed free during the Establishment Maintenance Period. All weeds within the planting basin are to be removed by hand only.

Weed control outside of the planting basins shall be done by hand removal, mechanical control or with a pest control recommendation written by a licensed California Pest Control Advisor. Herbicides are to be applied by a qualified State of California licensed Pest Control Advisor and/or Applicator, registered in Santa Clara County.

41.25.04 Submittals

A. Contractor shall record all control activities in the maintenance logbook, and shall include location of work done or areas needing future work, methods and materials used, etc.

B. Contractor shall submit to the Engineer District's Vegetation Management Unit documentation of control activity including the applicator's name and license number, date applied, material applied, rate and quantity applied, locations applied denoted by planting area, and any site conditions that might be applicable such as weather, in monthly maintenance logbook.

41.25.05 Inspections

Monthly Inspections – Contractor and the Engineer shall inspect the project site together monthly to review the Contractor's compliance with these specifications. At the completion of each monthly inspection, the Engineer will provide the Contractor with a punch list of items to be corrected and the Contractor shall have ten (10) calendar days to complete them.

Annual Inspections – Annual inspections shall be conducted once each year of the maintenance to review the Contractor's compliance with these specifications. The Contractor and the Engineer shall be present and shall convene on one mutually agreed upon fall day.

Final Inspection --- A final inspection of the project shall be conducted during the first two (2) weeks of the second to the last month of the maintenance. At the completion of the inspection, the Engineer will provide the Contractor with a punch list of items to be completed, and the Contractor shall complete the items on the punch list prior to the end of the maintenance. The Engineer will grant Notice of Acceptance for completion of the Contract to the Contractor upon satisfactory completion of the items on the punch list.

41.25.06 Measurement

Measurement of weed control shall be per month following the Contractor's submission and the Engineer's review of maintenance logbook.

41.25.07 Payment

Full payment for furnishing labor, materials, tools, equipment, and incidentals for providing weed control operations during the Three Establishment Maintenance Period, complete in place as shown on the Drawings, as specified in these Specifications and as directed by the Engineer shall be included in the lump sum bid for REVEGETATION and LANDSCAPE ESTABLISHMENT and MAINTENANCE, Bid Item No. 56 and Bid Additive Item Nos. 82, 119 and 154 if/when included in the awarded project by the District, and no separate payment will be made therefore.

Monthly payments will not be made until the maintenance logbook has received favorable review by the District and until all areas within the project limits meet these specifications for weed control.

41.26 Insect, Pest & Rodent Control

41.26.01 Scope of Work

Contractor shall provide all labor, materials, tools, equipment, and incidentals for providing rodent control. The Establishment Maintenance Period may be extended by the District if the project is improperly maintained, appreciable replacement is required, or other corrective work becomes necessary. Costs incurred due to damage or replacement during Establishment Maintenance Period shall be the responsibility of the Contractor. Contractor's pest and rodent control personnel shall be able to identify beneficial versus injurious insects, pests and rodents and visible signs and evidence of damage being caused by any insect, pest or rodent. Any observation of pests shall be noted and the District Vegetation Management Unit shall be contacted to determine if control measures are necessary.

Prior to any pesticide application the Contractor shall submit to the District's Vegetation Management Unit all pest control recommendations for review and approval.

All pesticide applications shall conform to the District's Pesticide Policy, Appendix G, and complies with Federal, State and Local regulations. All applications shall be done according to the pesticide label. All pesticide applications shall be approved through the submittal process by the District's Vegetation Management Unit.

Sequence and Scheduling – The first year of the Three Year Establishment Maintenance Period shall begin on the first day following acceptance of the installation phase. The minimum frequency for Contractor's site visits during the Maintenance Period shall be the following:

A. March 1 through September 30
   Year 1 – once every week
   Year 2 – once every ten (10) calendar days
   Year 3 – once every two (2) weeks

B. October 1 through February 28
   Years 1, 2, and 3 –every two weeks

41.26.02 Materials

A. Wire caging, if the District deems necessary. Contact the District for caging specification if applicable at the time.

B. If cultural and biological control methods, such as trapping, are not working and the State of California licensed Pest Control Advisor prescribes chemical applications, then the Contractor shall adhere to the following requirements: Pesticide materials shall be delivered to the site in the original unopened containers bearing legible labels indicating the Environmental Protection Agency (EPA) registration numbers. Pesticide materials shall be approved for use in or near aquatic environments. Contractor shall submit product specification for approval by the District Engineer.

41.26.03 Placement

1. Grazing and browsing of plant materials may be anticipated. At the direction of the District, Contractor shall install wire caging to protect target plant materials so that plants can establish.

2. As feasible, Contractor should seek cultural and biological control solutions, which do not depend on chemical applications for the eradications of insects, mites, snails, nematodes, and small animals (squirrels and gophers). Trapping should be utilized unless prescribed in writing by a State of California licensed Pest Control Advisor and/or Applicator, registered in Santa Clara County, and who possesses a State of California Pest Control Business License. Method of control shall be approved by the Engineer.

3. When pesticide becomes necessary to remove a pest or disease, a state-certified applicator shall apply required pesticides in accordance with EPA label restrictions and recommendations. The Engineer shall approve all pesticide use.

41.26.04 Submittals

1. Should cultural and biological control solutions not be effective, and the State of California licensed Pest Control Advisor authorizes chemical control treatments, the Contractor shall submit to the Engineer all products to be used as part of the pesticide treatment plan with proposed sequence of pesticide treatment work including: the pesticide trade name; chemical composition; formulation, concentration; application rate of active ingredients and method of application for all materials; and the name and state license number of the state certified applicator.

41.26.05 Inspections

Inspections shall be part of the Contractors daily observations. All observations shall be logged in a maintenance book for the District to review. The District shall be notified of an insect, pest or rodent observed on site to determine if control is necessary.

41.26.06 Measurement

Measurement of insect, pest and rodent control shall be per month following the Contractor's submission and the Engineer's review of maintenance logbook.

41.26.07 Payment

Full payment for furnishing labor, materials, tools, equipment, and incidentals for providing insect, pest and rodent control operations during the Three Establishment Maintenance Period complete, in place as shown on the Drawings, as specified in these Specifications and as directed by the Engineer shall Be included in the lump sum bid for REVEGETATION and LANDSCAPE ESTABLISHMENT and MAINTENANCE, Bid Item No. 56 and Bid Additive Item Nos. 82, 119 and 154 if/when included in the awarded project by the District, and no separate payment will be made therefore.
Monthly payments will not be made until the maintenance logbook has received favorable review by the District and until all areas within the project limits meet these specifications for insect, pest and rodent control.

41.27 Revegetation Hydroseed and Blanket – Post Installation

41.27.01 Scope of Work

Contractor shall provide all labor, materials, tools, equipment, and incidentals to erosion control within the revegetation hydroseeded areas (right side of the channel) during construction, the first year revegetation hydroseed growing season and the Post-Installation 3 Year Maintenance Period.

<u>During construction and the first year revegetation hydroseed growing season</u> - Revegetation hydroseed and blanket shall be maintained during construction and during the first year of seed establishment after installation. The Contractor shall be responsible for monitoring any signs of erosion and any damage or failures in the blanket and repair them immediately. After the first hydroseed growing and establishment year, the blanket will begin to break down and degrade. At this time, the Contractor no longer needs to repair or maintain the blanket as the hydroseed should be fully established by now.

During the Post-Installation 3 Year Maintenance Period It is the Contractors responsibility to maintain the project site and monitor erosion. If large erosion wash-out's occur, the District shall be notified and will repair.

The maintenance period may be extended by the District if the project is improperly maintained, appreciable replacement is required, or other corrective work becomes necessary. Costs incurred due to damage or replacement during Post-Installation 3 Year Maintenance shall be the responsibility of the Contractor. Qualifications of the maintenance personnel shall be such that they are readily able to identify any plant materials growing on the site, whether they are weeds or desirable species.

41.27.02 Materials

Materials used for erosion control shall be submitted and approved by the District before use. It is the contractor's responsibility to determine the best materials to mitigate or repair erosion that occurs during the 3 year establishment period. All materials shall be non toxic and biodegradable.

41.27.03 Placement

Sequence and Scheduling –

During construction the Contractor shall monitor the site daily for erosion and repair as necessary. During the Maintenance Period which shall begin on the first day following acceptance of the installation phase, the minimum frequency for Contractor's site visits shall be the following:

A. March 1 through September 30
   Year 1 – once every week
   Year 2 – once every ten (10) calendar days
   Year 3 – once every two (2) weeks

B. October 1 through February 28
   Years 1, 2, and 3 – every two weeks

Execution

A. Immediately after installation of revegetation hydroseed in the first year and plant materials in the second year, the areas shall be protected against traffic or other use by erecting barricades and providing signage as required, or as directed by the Engineer.

B. Contractor shall inspect the site for potential erosion throughout the planting and hydroseeded areas during each site visit.

C. If an erosion problem is detected, the Contractor shall coordinate with the District on determining the appropriate erosion control measure.

D. Costs incurred for repair or replacement of bare, sparse, or damaged areas shall be the responsibility of the Contractor.

41.27.04 Submittals

A. Contractor shall record all maintenance activities and observations in maintenance logbook, including date, area, materials, and man-hours. Logbook shall document overall site conditions, areas of actual and potential erosion and control measures implemented.

B. During the maintenance, the Contractor shall submit the maintenance logbook to the Engineer by the first week of each month. Submittals and shop drawings shall be required for approval prior to start of any work for which detailed specifications are not provided herein.

41.27.05 Inspections

In the event of Storms – Inspections and repairs to revegetation hydroseeded areas should be scheduled BEFORE the first season rains and DURING and AFTER each major storm.

Monthly Inspections – Contractor and the Engineer shall inspect the project site together monthly to review the Contractor's compliance with these specifications. At the completion of each monthly inspection, the Engineer will provide the Contractor with a punch list of items to be corrected and the Contractor shall have ten (10) calendar days to complete them.

Annual Inspections – Annual inspections shall be conducted once each year of the maintenance to review the Contractor's compliance with these specifications. The Contractor and the Engineer shall be present and shall convene on one mutually agreed upon fall day.

Final Inspection – A final inspection of the project shall be conducted during the first two (2) weeks of the last month of the maintenance. At the completion of the inspection, the Engineer will provide the Contractor with a punch list of items to be completed, and the Contractor shall complete the items on the punch list prior to

the end of the maintenance. The Engineer will grant Notice of Acceptance for completion of the Contract to the Contractor upon satisfactory completion of the items on the punch list.

41.27.06 Measurement

Measurement of Revegetation Hydroseed and Blanket – Post Installation shall be per month following the monthly site inspection by the Engineer. Revegetation planting areas shall maintain finish grade elevations and gradient slopes (as accepted by the Engineer at the beginning of the Post Installation 3 Year Maintenance period) throughout the maintenance period. The Engineer may modify this requirement at their discretion after taking into account natural environmental processes.

41.27.07 Payment

Full payment for furnishing labor, materials, tools, equipment, and incidentals maintain to revegetate hydroseeded areas, including the revegetation blanket as shown on the Drawings, as specified in these Specifications and as directed by the Engineer during Post-Installation 3 Year Maintenance shall be included in the lump sum bid for REVEGETATION and LANDSCAPE ESTABLISHMENT and MAINTENANCE, Bid Item No. 56 and Bid Additive Item Nos. 82, 119 and 154 if/when included in the awarded project by the District, and no separate payment will be made therefore.

Monthly payments will not be made until the maintenance logbook has received favorable review by the District and until all areas within the project limits meet these specifications for a healthy stand of hydroseed.

APPENDIX A

Agreement

Payment Bond

Performance Bond

Instructions for Completing SBE Utilization Report

Sample Small/Micro Business Enterprises (SBE) Utilization Report

Escrow Agreement for Security Deposits in Lieu of Retention

Three-Party Agreement for DRB

This Page Left Intentionally Blank

The following is an agreement entered into as of _____ by and between the SANTA CLARA VALLEY WATER DISTRICT, State of California, hereinafter referred to as "District" and _____, hereinafter referred to as "Contractor."

For the considerations hereinafter specified, Contractor and District agree as follows:

ARTICLE I: Work to Be Done and Documents Forming the Contract

Contractor agrees to do all the work and furnish all materials necessary to construct and complete, in accordance with the Specifications the following work:

Lower Silver Creek Flood Protection and Creek Restoration Project
Interstate 680 to Moss Point Drive (Reaches 4, 5 & 6A)
Project No. 40264008, Contract No. C0564

Said work shall be performed to the satisfaction of the Engineer all in accordance with the Drawings, Specifications, Notice to Bidders, and the Proposal of the Contractor, all of which documents are hereby specially referred to and by such reference made a part of this Contract.

ARTICLE II: Contract Price

District hereby agrees and promises to pay to Contractor the sum of _____ Dollars ($_____).

For the performance of said work; provided, however, that the above mentioned sum is one determined by the Proposal of Contractor as based upon the estimated amount of work to be done, and should there be any variance between the estimated amount of work to be done and the actual amount of work performed, then the final payment price shall be computed on the basis of the unit prices contained in the Proposal of Contractor.

ARTICLE III: Completion of Contract

It is hereby agreed that the work called for under this Contract, in all its parts and requirements, shall be completed before the expiration of _____ calendar days from the First Chargeable Day of the Contract as stated on the Notice to Begin Work unless the time for completion is extended, as allowed by the Specifications.

ARTICLE IV: Bonds Required

This Contract shall have no force or effect whatsoever unless and until Contractor delivers to District a Payment Bond in the sum of _____ Dollars ($_____).

Nor shall such Contract be effective until Contractor also gives a good and sufficient bond in the sum of _____ Dollars ($_____) for the faithful performance of the work to be done under the terms of this Contract.

ARTICLE V: Certification by Contractor

Contractor hereby certifies as follows:

> "I certify that I am aware of the provisions of Section 3700 of the Labor Code which requires every employer to be insured against liability for workers' compensation or to undertake self insurance in accordance with the provisions of that Code, and I will comply with such provisions before commencing the performance of the work of this Contract."

ARTICLE VI: Gift Policy Observance

Contractor hereby acknowledges that District policy prohibits the acceptance by District personnel of gifts of any kind from vendors or contractors. Contractor shall honor this policy by not sending or bringing gifts to the District.

IN WITNESS WHEREOF, Contractor and District have caused this Agreement to be subscribed as of the day and year first hereinabove written.

Date Contractor signature affixed:

_____

By _____

Title _____

_____
Federal I.D.

"Contractor"

SANTA CLARA VALLEY WATER DISTRICT

Date District signature affixed:

By _____

"District"

_____

Payment Bond

BE IT KNOWN BY THESE PRESENTS: That

WHEREAS, the Santa Clara Valley Water District (hereinafter called "the Public Entity"), and _____ (hereinafter designated as "Principal") have entered into an agreement for the furnishing of **Lower Silver Creek Flood Protection and Creek Restoration Project, Interstate 680 to Moss Point Drive (Reaches 4, 5 & 6A)** which said agreement is dated as of _____, 20_____; and

WHEREAS, said Principal is required by Chapter 5 (commencing at Section 3225) and Chapter 7 (commencing at Section 3247), Title 15, Part 4, Division 3 of the California Civil Code to furnish a bond in connection with said agreement;

NOW, THEREFORE, we, the Principal and _____ as Surety, are held and firmly bound unto the Public Entity in the penal sum of _____ Dollars ($_____) lawful money of the United States of America for the payment of which sum well and truly to be made, we bind ourselves, our heirs, executors, Administrators, and successors and assigns, jointly and severally, firmly by these presents.

THE CONDITION OF THIS OBLIGATION IS SUCH that if the Principal or the Principal's subcontractor fails to pay any of the persons named in Section 3181, or amounts due under the California Unemployment Insurance Code with respect to work or labor performed under the agreement, or for any amounts required to be deducted, withheld, and paid over to the Employment Development Department from the wages of employees of the Principal and the Principal's subcontractors pursuant to Section 13020 of the Unemployment Insurance Code, with respect to such work and labor, that the Surety or Sureties will pay for the same, in an amount not exceeding the sum hereinabove specified, and also, in case suit is brought upon the bond, a reasonable attorney's fee, to be fixed by the court. The Principal may require of the Principal's subcontractors a bond to indemnify the Principal for any loss sustained by the Principal because of any default by the Principal's subcontractors under Section 3248 of the California Civil Code.

This bond shall inure to the benefit of any of the persons named in Section 3181 of the California Civil Code, so as to give a right of action to such persons or their assigns in any suit brought upon this bond.

Should the condition of this bond be fully performed, then this obligation shall become null and void; otherwise, it shall be and remain in full force and effect.

IN WITNESS WHEREOF two identical counterparts of this instrument, each of which shall for all purposes be deemed an original thereof, have been duly executed by the Principal and Surety or Sureties above named on the _____ day of _____, 20_____.

PRINCIPAL:	**SURETY**:
_____	_____
Signature	Signature
_____	_____
Name	Name (Seal)
_____	_____
Title	Title
_____	_____
Address	Address

NOTE: Signatures of those executing for the Surety or Sureties must be properly acknowledged.

Performance Bond

BE IT KNOWN BY THESE PRESENTS: That

WHEREAS, the Santa Clara Valley Water District, State of California, has awarded to _____ _____ (hereinafter designated as "Principal") a Contract for **Lower Silver Creek Flood Protection and Creek Restoration Project, Interstate 680 to Moss Point Drive (Reaches 4, 5 & 6A)**, and

WHEREAS, said Principal is required under the terms of said Contract to furnish a bond for the faithful performance of said Contract,

NOW, THEREFORE, we, the Principal and _____ as Surety, are held and firmly bound unto the Santa Clara Valley Water District (hereinafter called "District") in the sum of _____ Dollars ($_____) lawful money of the United States, for the payment of which sum well and truly to be made, we bind ourselves, our heirs, executors, administrators and successors, jointly and severally, firmly by these presents.

THE CONDITION OF THIS OBLIGATION IS SUCH that if the above bounden Principal, or heirs, executors, administrators, successors, or assigns shall in all things stand to and abide by, and well and truly keep and perform the covenants, conditions and agreements in the said Contract and any alteration thereof made as therein provided, to be kept and performed at the time and in the manner therein specified, and in all respects according to their true intent and meaning, and shall indemnify and save harmless District, its officers, agents, and employees, as therein stipulated, then this obligation shall become null and void; otherwise it shall be and remain in full force and effect.

And the said Surety, for value received hereby stipulates and agrees that no change, extension of time, alteration, or addition to the terms of the Contract or to the work to be performed thereunder or the Specifications accompanying the same shall in any wise affect its obligation on this bond, and does hereby waive notice of any such change, extension of time, alteration, or addition to the terms of the Contract or to the work or to the Specifications.

In the event suit is brought upon this bond by District and judgment is recovered, Surety shall pay all costs incurred by District in such suit, including a reasonable attorney's fee to be fixed by the Court.

IN WITNESS WHEREOF two identical counterparts of this instrument, each of which shall for all purposes be deemed an original thereof, have been duly executed by Principal and Surety above named, on the _____ day of _____, 20_____.

PRINCIPAL:	**SURETY**:
_____	_____
Signature	Signature
_____	_____
Name	Name (Seal)
_____	_____
Title	Title
_____	_____
Address	Address

NOTE: Signature of those executing for Surety must be properly acknowledged.

Instructions for Completing SBE Utilization Report

Download Excel form from District's website:
www.valleywater.org/Programs/Construction.aspx

This form is **due monthly** with the **Progress Pay Application**.
The **final SBE Utilization Report** is **due prior to final payment**.

Page 1 Instructions:

a. This is the total amount of money paid to date by SCVWD for work completed on this Contract.

b. This is the CURRENT Contract amount, including all executed change orders. Please refer to the Contract Total shown on your most recent approved Progress Payment Report.

c. a ÷ b = c

d. Total of Column I.

e. Use the SBE participation $ listed on Bid Form #5 Affidavit.

f. Total of Column IV.

g. f ÷ a = g

h. f ÷ e = h

Page 2 Instructions:

Column I. List $ amount of SBE participation to each Subcontractor or Supplier listed on Bid Form #5. The total of this column goes on line d of page 1.

Column II. List Materials/Supplies/Trucking amount paid to each SBE.

Column III. List Subcontractor amount paid to each SBE.

Column IV. Column II plus Column III. The total of this column goes on line f of page 1.

SAMPLE Small/Micro Business Enterprises (SBE) Utilization Report

Santa Clara Valley Water District

CONTRACT DOCUMENTS

SMALL/MICRO BUSINESS ENTERPRISES (SBE) UTILIZATION REPORT

Page 1 of 2

☐ MONTHLY ☐ FINAL

CONTRACT NO.:	ORIGINAL BID AMOUNT:	FIRM (PRIME):
CONTRACT TITLE:		ADDRESS:
REPORT PERIOD:		CITY, STATE & ZIP CODE:
		PHONE NO.:
		NAME & TITLE OF PERSON COMPLETING THIS FORM (PLEASE PRINT OR TYPE):
		SIGNATURE: / FORM COMPLETION DATE:

a. Amount of Contract Completed ..... $ _____

b. TOTAL Amount of Contract (Including all change orders) ..... $ _____

c. % of Contract Completed ..... _____ %

d. SBE Amount ..... $ _____

e. SBE Contractor Committed Participation (Use Bid Form #6 Affidavit) ..... $ _____

f. SBE Work Paid to Date ..... $ _____

g. SBE % of Contract Completed ..... _____ %

h. % of SBE Participation Completed ..... _____ %

Advertised Contract Goal: $ _____

When Contract progress is 50% or more complete, and if SBE* participation % complete (h) is less than the total % of Contract completion, Contractor must submit a report to SCVWD on how it will achieve SBE participation % by completion of Contract.

THIS FORM IS NOT TO BE ALTERED IN ANY WAY.
ALTERED FORMS WILL BE REJECTED AS NONCOMPLIANT.

*SBE must be certified or accepted as certified by Department of General Services.

(Rev. 01/21/10)
WP File Name

PROJECT NAME

Santa Clara Valley Water District

CONTRACT DOCUMENTS

SMALL/MICRO BUSINESS ENTERPRISES (SBE) UTILIZATION REPORT

Page 2 of 2

List ALL SBE* PARTICIPATION SUBCONTRACTORS/SUPPLIERS/TRUCKING (From Bid Form #5)	AMOUNT OF SUBCONTRACT OR PURCHASE (From Bid Form #5)	MATERIALS/SUPPLIES/TRUCKING			SUBCONTRACTORS			TOTAL PAID TO DATE (M)	ITEM NUMBER(S) OR GENERAL DESCRIPTION OF WORK PERFORMED THIS PERIOD (Electrical, landscape, engineering, survey, etc.)
		PAID PREVIOUSLY	PAID THIS PERIOD	PAID TO DATE (K)	PAID PREVIOUSLY	PAID THIS PERIOD	PAID TO DATE (N)		
TOTAL									

THIS FORM IS NOT TO BE ALTERED IN ANY WAY.
ALTERED FORMS WILL BE REJECTED AS NONCOMPLIANT.
*SBE must be certified or accepted as certified by Department of General Services.

(Rev. 01/21/10)
WP File Name

PROJECT NAME

Download Excel form from District's website:
www.valleywater.org/Programs/Construction.aspx

Escrow Account No.: _____

This Escrow Agreement is made and entered into by and between:

SANTA CLARA VALLEY WATER DISTRICT whose address is 5750 Almaden Expressway, San Jose, CA 95118 hereinafter called "**Owner**," and

_____ whose address is _____ hereinafter called "**Contractor**," and

_____ whose address is _____ hereinafter called "**Escrow Agent**," and

For the consideration hereinafter set forth, the Owner, Contractor, and Escrow Agent agree as follows:

1. Pursuant to §22300 of the Public Contract Code of the State of California, Contractor has the option to deposit securities with Escrow Agent as a substitute for retention earnings required to be withheld by Owner pursuant to the Construction Contract entered into between the Owner and Contractor for **Lower Silver Creek Flood Protection and Creek Restoration Project, Interstate 680 to Moss Point Drive (Reaches 4, 5 & 6A)**, in the amount of $_____ dated _____ (hereinafter referred to as the "Contract"). Alternatively, on written request of the Contractor, the Owner shall make payments of the retention earnings directly to the Escrow Agent. When the Contractor deposits the securities as a substitute for Contract earnings, the Escrow Agent shall notify the Owner within 10 days of the deposit. The market value of the securities at the time of the substitution shall be at least equal to the cash amount then required to be withheld as retention under the terms of the Contract between the Owner and Contractor. Securities shall be held in the name of **Santa Clara Valley Water District**, and shall designate the Contractor as the beneficial owner.

2. The Owner shall make progress payments to the Contractor for those funds which otherwise would be withheld from progress payments pursuant to the Contract provisions, provided that the Escrow Agent holds securities in the form and amount specified above.

3. When the Owner makes payment of retentions earned directly to the Escrow Agent, the Escrow Agent shall hold them for the benefit of the Contractor until the time that the escrow created under this contract is terminated. The Contractor may direct the investment of the payments into securities. All terms and conditions of this agreement and the rights and responsibilities of the parties shall be equally applicable and binding when the Owner pays the Escrow Agent directly.

4. Contractor shall be responsible for paying all fees for the expenses incurred by Escrow Agent in administering the Escrow Account and all expenses of the Owner. These expenses and payment terms shall be determined by the Owner, Contractor, and Escrow Agent.

5. The interest earned on the securities or the money market accounts held in escrow and all interest earned on that interest shall be for the sole account of Contractor and shall be subject to withdrawal by Contractor at any time and from time to time without notice to the Owner.

6. Contractor shall have the right to withdraw all or any part of the principal in the Escrow Account only by written notice to Escrow Agent accompanied by written authorization from the Owner to the Escrow Agent that Owner consents to the withdrawal of the amount sought to be withdrawn by Contractor.

7. The Owner shall have a right to draw upon the securities in the event of default by the Contractor. Upon seven days' written notice to the Escrow Agent from the owner of the default, the Escrow Agent shall immediately convert the securities to cash and shall distribute the cash as instructed by the Owner.

8. Upon receipt of written notification from the Owner certifying that the Contract is final and complete, and that the Contractor has complied with all requirements and procedures applicable to the Contract, Escrow Agent shall release to Contractor all securities and interest on deposit less escrow fees and charges of the Escrow Account. The escrow shall be closed immediately upon disbursement of all moneys and securities on deposit and payments of fees and charges.

9. Escrow Agent shall rely on the written notifications from the Owner and the Contractor pursuant to Sections (5) to (8), inclusive, of this Agreement and the Owner and Contractor shall hold Escrow Agent harmless from Escrow Agent's release and disbursement of the securities and interest as set forth above.

10. The names of the persons who are authorized to give written notice or to receive written notice on behalf of the Owner and on behalf of Contractor in connection with the foregoing, and exemplars of their respective signatures are as follows:

On behalf of Owner:

Signature Date

Name
Capital Program Deputy Operating Officer
Designated Engineer

Title

5750 Almaden Expressway
San Jose, CA 95118

Address

On behalf of Contractor:

Signature Date

Name

Title

Address

On behalf of Escrow Agent:

Signature Date

Name

Title

Address

At the time the Escrow Account is opened, the Owner and Contractor shall deliver to the Escrow Agent a fully executed counterpart of this Agreement.

IN WITNESS WHEREOF, the parties have executed this Agreement by their proper officers on the date first set forth above.

OWNER:

Signature Date

Name
Capital Program Deputy Operating Officer
Designated Engineer

Title

5750 Almaden Expressway
San Jose, CA 95118

Address

CONTRACTOR:

Signature Date

Name

Title

Address

Page left intentionally blank

DISPUTE REVIEW BOARD

THREE-PARTY AGREEMENT

I. PARTIES

A. Santa Clara Valley Water District herein after referred to as the District.

B. _____, herein after referred to as the Contractor.

C. Dispute Review Board, hereinafter referred to as the DRB, consisting of three members:

1. _____

2. _____

3. _____

II. CONTRACT

A. The Contractor has entered into a Prime Contract with the District for the construction of the Lower Silver Creek Flood Protection and Creek Restoration Project Reaches 4,5,&6A , hereinafter referred to as the Project.

B. The Project Prime Contract Documents provide for the establishment and operation of a DRB to assist in resolving disputes.

C. The DRB is composed of three members, selected in accordance with the Specifications.

III. PURPOSE OF DRB

Assist in and facilitate avoidance of disputes and the timely and impartial resolution of disputes that are referred to it.

IV. DRB SCOPE OF WORK

A. General:

1. Stay abreast of project developments by means of periodic meetings and site visits, review of progress reports, meeting minutes, and other job documents, and by other means as mutually agreed by all parties.

2. Examine site conditions or specific construction problems relating to an existing or potential dispute, unless such examination is not practical, or, in the judgment of either the District or the Contractor, would result in a delay to the project.

3. One of the selected members shall serve as Chairperson.

4. Execute this Agreement at the first meeting with representatives of the District and the Contractor.

B. DRB Meetings

1. Scheduled DRB progress meetings shall be held at or near the project site. DRB shall meet at least once at the start of the project, and at least once every 4 months thereafter. The frequency exact time and duration

of additional site visits and progress meetings shall be as recommended by the DRB and approved by the parties consistent with the construction activities or matters under consideration and dispute. Scheduled progress meetings and site visits can be waived/delayed, if the parties are in agreement

2. Each DRB meeting shall consist of a round table discussion and a field inspection of the work being performed on the contract, if necessary. Each meeting shall be attended by representatives of both parties. The agenda shall generally be as follows:

    a. Meeting opened by the DRB Chairperson.

    b. Remarks by the District's representative.

    c. A description by the Contractor's representative of work accomplished since the last meeting; the current schedule status of the work; and a forecast for the coming period.

    d. An outline by the District's representative of the status of the work as the District views it.

    e. An outline by the Contractor's representative of potential problems and a description of proposed solutions.

    f. A brief description by the Contractor's and the District's representative of potential claims and disputes that have surfaced since the last meeting.

    g. A summary by the District's representative, the Contractor's representative, or the DRB of the status of past potential claims and disputes.

    h. When mutually agreed, an option for an advisory opinion.

3. The District's representative will prepare a meeting summary of all progress meetings and circulate them for revision and approval by all concerned within 10 days of the meeting.

C. Establish DRB operating procedures consistent with the requirements and general guidelines set forth in the Prime Contract DRB Specifications.

1. The DRB Chairperson shall establish operating procedures mutually agreeable to all parties, such as administrative duties; content and format of information which may be presented at DRB hearings; conduct of hearings; and invoicing details. Establish these procedures at the first meeting with representatives of the District and the Contractor.

2. Initiate new procedures or modify existing procedures as mutually agreed to by all parties.

3. Provide all parties with these operating procedures, including all modified procedures, in written form. Include the procedures for progress meetings and for advisory opinions.

D. Recommend Resolution of Disputes:

1. Upon receipt by the DRB of a referral of a dispute from either the District or Contractor, schedule and conduct a hearing at a time and location set by the DRB following consultation with the District and Contractor.

2. When proper evaluation of the dispute requires expertise that is not within the collective experience of the DRB, engage, with the prior written approval of the District and the Contractor, the services of one or more outside consultants as may be needed to advise the DRB.

3. Convene internal meetings as needed and approved to review and discuss the dispute, and to formulate the report.

4. Following each hearing and DRB deliberation, issue timely executed written reports to the District and the Contractor, including the supporting rationale.

5. When requested and deemed appropriate by the DRB, provide executed written responses to requests for clarification or reconsideration made by either the District or the Contractor.

6. All DRB reports and responses to requests for clarification or reconsideration shall be signed by all three Board members.

E. Perform services and assume responsibilities, as agreed by all parties, as may be required, including those necessary but not listed herein, to achieve the purpose of this Agreement.

V. RESPONSIBILITIES OF THE PARTIES

A. DRB Responsibilities:

1. Maintain impartiality and avoid conflicts of interest by continuing to meet the specified requirements for nominees for Board members. Promptly advise all parties upon becoming aware of any development that could be perceived as a conflict of interest.

2. During progress or dispute resolution meetings, DRB members shall refrain from expressing opinions on the merits of statements on matters under dispute or potential dispute. Opinions of DRB members expressed in private sessions shall be kept strictly confidential. Individual DRB members shall not meet with, or discuss contract issues with individual parties.

3. Discussions regarding the project between the DRB members and the parties shall be in the presences of all three members and both parties. Individual DRB members shall not undertake independent investigations of any kind pertaining to disputes or potential disputes, except with the knowledge of both parties and as expressly directed by the DRB Chairperson.

4. Do not discuss, individually or collectively, issues with the District or the Contractor that could possibly be construed as compromising the

DRB's ability to impartially resolve future disputes, such as the conduct of the work and the resolution of construction problems.

5. Do not express an individual or collective opinion of merit, in whole or in part, for any potential or other dispute at any time prior to the issue of a report, except in the case of an advisory opinion.

6. Except as required when performing the duties of the Chairperson or conducting a hearing which the District or Contractor refuses to attend, do not meet or communicate with either the District or Contractor in the absence of the other.

7. Consider the facts and conditions forming the basis for a referred dispute impartially, and independently and evaluate the merits based on careful consideration of all contract requirements, applicable law and regulations, and the facts and circumstances of the dispute. Do not:

   a. Ignore or undermine the clear intent of the contract, or disregard or alter any requirements of the contract or allocation of risk specified therein.

   b. Supplant or otherwise interfere with the respective rights, authority, duties, and obligations of either the District or Contractor as set forth in the contract documents.

8. Make every effort to reach unanimous recommendations. If this cannot be accomplished, include written minority recommendations and supporting rationale with the report.

B. District Responsibilities:

1. Except for participation in the DRB's activities as provided in the contract documents and this Agreement, do not solicit advice or consultation from the DRB or its members on matters dealing with the conduct of the work or resolution of problems which might compromise the DRB's ability to impartially resolve future disputes.

2. Furnish to each Board member one copy of the conformed contract documents, progress schedule and updates, weekly progress reports, minutes of progress meetings with the Contractor, change orders, and other documents pertinent to the performance of the contract and necessary for the DRB to conduct its operations.

3. Coordinate DRB operations in cooperation with the Contractor.

4. Arrange for or provide conference facilities at or near the site, and provide copying services.

5. Cooperate with the Contractor and the DRB to facilitate prevention of disputes and the timely and impartial resolution of disputes.

C. Contractor Responsibilities:

1. Except for participation in the DRB's activities as provided in the contract documents and this Agreement, do not solicit advice or consultation from the DRB or its members on matters dealing with the

conduct of the work or resolution of problems which might compromise the DRB's ability to impartially resolve future disputes.

2. Furnish to each Board member and to the District, one copy of pertinent documents other than those furnished by the District as may be requested.

3. Cooperate with the District and the DRB to facilitate prevention of disputes and the timely and impartial resolution of disputes that are referred to it.

VI. TIME FOR BEGINNING AND COMPLETION OF DRB ACTIVITIES

A. Unless the DRB Chairperson has been previously identified by the parties, the DRB shall begin its activities by selecting the Chairperson. After selection of the Chairperson, DRB activities shall proceed with preparation for the first meeting, including preparation of the DRB operating procedures.

B. This Agreement shall survive the termination, resignation or death of any member.

C. The DRB's jurisdiction under this Agreement shall end on the date of final payment under the CONTRACT, unless terminated earlier by mutual agreement of the District and Contractor.

VII. PAYMENT

A. Payments made to the Board members shall constitute full compensation for work performed, travel time and services rendered, and for all materials, supplies and incidentals necessary to serve on the DRB.

B. Each DRB member shall be compensated at an agreed rate of $1,500 per day for time spent per meeting either at the start of the project, for scheduled progress, or other meetings. The agreed rate shall be considered full compensation for on-site time, travel expenses, transportation, lodging, time for travel, and incidentals for each day or portion thereof that the DRB member is at an authorized DRB meeting. No additional compensation will be made for time spent by DRB members in review and research activities outside the official DRB meetings unless that time, such as time spent evaluating and preparing recommendations on specific issues presented to the DRB, has been specifically agreed to in advance by the District and the Contractor. Time away from the project, which has been specifically agreed to in advance by the District and Contractor, will be compensated at an agreed rate of $175 per hour. The agreed amount of $175 per hour shall include all incidentals including expenses for telephone, copies, postage, fax, and computer services. Payment for services rendered by Board members shall be at the rate and conditions per above unless otherwise agreed to in writing between the District and the Contractor and each Board member.

C. Board members shall be reimbursed for actual direct, non-salary expenses including automobile mileage, parking, travel expenses from the point of departure to the initial point of arrival, automobile rental, taxi fares, food and

lodging, printing, long distance telephone, postage and courier delivery, subject to limitations imposed by the contract.

D. Payment made to Board members in the form of bonus, commission, or consideration of any nature other than that specified hereinabove for performance and service provided under this Agreement, before, during or after the period that this Agreement is in effect, is prohibited.

E. Board members shall individually submit invoices for work completed to the Contractor:

1. Not more often than once per month.
2. Based on the agreed billing rate and conditions and on the number of hours expended.
3. Accompanied by a description of activities performed daily during that period.

F. The Contractor shall pay acceptable invoices, approved by the District, within 30 days of their receipt.

G. The Contractor shall be reimbursed for the District's portion of the DRB costs in accordance with payment provisions specified elsewhere in the contract.

VIII. CONFIDENTIALITY AND RECORDKEEPING

A. No Board member shall divulge information identified as confidential that has been acquired during DRB activities without obtaining prior written approval from the District and the Contractor.

B. Board members shall maintain cost records pertaining to this Agreement for inspection by the District or the Contractor for a period of three years following the end or termination of this Agreement.

IX. ASSIGNMENT

No party to this Agreement shall assign any duty established under this Agreement.

X. TERMINATION

A. This Agreement may be terminated by mutual agreement of the District and Contractor at any time upon not less than four weeks written notice to the other parties.

B. Individual Board members may be terminated only by agreement of both the District and the Contractor.

C. If a Board member resigns, is unable to serve, or is terminated he or she shall be replaced within four weeks in the same manner as he or she was originally selected. This Agreement shall be amended to indicate the member replacement.

XI. LEGAL RELATIONS

A. The parties to this Agreement expressly acknowledge that each Board member, in the performance of his or her duties on the DRB, is acting in the capacity of an independent agent and not as an employee of the District or the Contractor.

B. Board members shall not participate in subsequent dispute proceedings.

C. The District and the Contractor acknowledge that each Board member is acting in a capacity intended to facilitate the resolution of disputes. Accordingly, it is agreed and acknowledged that, to the fullest extent permitted by law, each Board member shall be accorded quasi-judicial immunity for any actions or decisions associated with DRB activities.

D. Each Board member shall be held harmless for any personal or professional liability arising from or related to DRB activities. To the fullest extent permitted by law, the District and the Contractor shall indemnify and hold harmless all Board members for claims, losses, demands, costs, and damages (including reasonable attorney fees) for bodily injury, property damage, or economic loss arising out of or related to Board members carrying out DRB activities. The foregoing indemnity is a joint and several obligation.

E. DRB members shall have no claim against the District or the Contractor, or both from claimed harm arising out of the parties' evaluations of the DRB's opinions.

XII. DISPUTES REGARDING THIS THREE-PARTY AGREEMENT

A. Disputes among the parties arising out of this Agreement that cannot be resolved by negotiation and mutual concurrence and actions to enforce any right or obligation under this Agreement shall be initiated in the _____ [Court Name] Court of the _____ [Jurisdiction].

B. All questions shall be resolved by application of _____ [Jurisdiction] law.

C. The Board members hereby consent to the personal jurisdiction of the Court of the _____ [Jurisdiction].

XIII. FUNDING AGENCY REVIEW

The National Resource Conservation Service and the California State Department of Water Resources have the right to review DRB reports and to attend DRB hearings, but not to attend private DRB deliberations.

XIV. THREE-PARTY AGREEMENT

Entered into on _____ _____, 2010 between:

(month) (day)

BOARD MEMBERS

By: _____ _____
(Signature) (Name)

By: _____ _____
(Signature) (Name)

By: _____ _____
(Signature) (Name)

CONTRACTOR

By: _____
(Signature)

By: _____
(Name)

Title: _____

DISTRICT

By: _____
(Signature)

By: _____
(Name)

Title: _____

APPENDIX B

FEDERAL REQUIREMENTS

AMERICAN RECOVERY AND REINVESTMENT ACT (ARRA)

Page left intentionally blank

APPENDIX B

FEDERAL REQUIREMENTS
AMERICAN RECOVERY AND REINVESTMENT ACT (ARRA)

Page No.	
2–9	Buy American Requirements and Certification
10	Buy American Certification of Compliance Form
11–12	Instructions and Sample for Completing “Manufacturer’s Buy American Certification of Compliance”
13	Instructions for Completion of SF-LLL, Disclosure of Lobbying Activities
14–15	Disclosure of Lobbying Activities
16–19	Equal Opportunity Requirements
20	Prohibition of Segregated Facilities
21	Certification Regarding Debarment and Suspension
22–23	Clean Air and Water Clause
24	Clean Air and Water Clause Certification
25–30	Protecting Whistleblowers Requirements
31–32	ARRA Monthly Employment Report
33	Data Universal Numbering System (D-U-N-S) Number
34–36	Central Contractor Registration
37	Authority of U.S. Comptroller General and Inspector General on Projects Using ARRA Funds
38–44	Davis-Bacon Wage Requirements
45	Davis-Bacon Wage Determinations

Page left intentionally blank

The Contractor acknowledges, to and for the benefit of the District, that it understands this project is partially funded with monies made available by the American Recovery and Reinvestment Act of 2009 (ARRA) which contains provisions commonly known as "Buy American." Certification of compliance with ARRA Buy American provisions must be furnished by the Contractor as a submittal prior to the use of any materials subject to the Buy American provisions. See Buy American Certification of Compliance Form. ARRA Section 1605 regarding these requirements provides as follows:

I. American Recovery and Reinvestment Act of 2009 (ARRA Pub. L. 111-5)

Section 1605. Use of American Iron, Steel, and Manufactured Goods.

"(a) None of the funds appropriated or otherwise made available by this Act may be used for a project for the construction, alteration, maintenance, or repair of a public building or public work unless all of the iron, steel, and manufactured goods used in the project are produced in the United States.

(b) Subsection (a) shall not apply in any case or category of cases in which the head of the Federal department or agency involved finds that—

(1) Applying subsection (a) would be inconsistent with the public interest;

(2) Iron, steel, and the relevant manufactured goods are not produced in the United States in sufficient and reasonably available quantities and of a satisfactory quality; or

(3) Inclusion of iron, steel, and manufactured goods produced in the United States will increase the cost of the overall project by more than 25 percent.

(c) If the head of a Federal department or agency determines that it is necessary to waive the application of subsection (a) based on a finding under subsection (b), the head of the department or agency shall publish in the Federal Register a detailed written justification as to why the provision is being waived.

(d) This section shall be applied in a manner consistent with United States obligations under international agreements."

FAR 52.225-23 Required Use of American Iron, Steel, and Other Manufactured Goods—Buy American Act—Construction Materials Under Trade Agreements.

REQUIRED USE OF AMERICAN IRON, STEEL, AND OTHER MANUFACTURED GOODS—BUY AMERICAN ACT—CONSTRUCTION MATERIALS UNDER TRADE AGREEMENTS (AUG 2009)

(a) *Definitions*. As used in this clause—

"Construction material" means an article, material, or supply brought to the construction site by the Contractor or subcontractor for incorporation into the building or work. The term also includes an item brought to the site preassembled from articles, materials, or supplies. However, emergency life safety systems, such as emergency lighting, fire alarm, and audio evacuation systems, that are discrete systems incorporated into a public building or work and that are produced as complete systems, are evaluated as a single and distinct construction material regardless of when or how the individual parts or components of those systems are delivered to the construction site. Materials purchased directly by the Government are supplies, not construction material.

"Domestic construction material" means—

(1) An unmanufactured construction material mined or produced in the United States; or

(2) A construction material manufactured in the United States.

"Foreign construction material" means a construction material other than a domestic construction material.

"Free trade agreement (FTA) country construction material" means a construction material that—

(1) Is wholly the growth, product, or manufacture of an FTA country; or

(2) In the case of a construction material that consists in whole or in part of materials from another country, has been substantially transformed in an FTA country into a new and different construction material distinct from the materials from which it was transformed.

"Least developed country construction material" means a construction material that—

(1) Is wholly the growth, product, or manufacture of a least developed country; or

(2) In the case of a construction material that consists in whole or in part of materials from another country, has been substantially transformed in a least developed country into a new and different construction material distinct from the materials from which it was transformed.

"Manufactured construction material" means any construction material that is not unmanufactured construction material.

"Recovery Act designated country" means any of the following countries:

(1) A World Trade Organization Government Procurement Agreement (WTO GPA) country (Aruba, Austria, Belgium, Bulgaria, Canada, Cyprus, Czech Republic, Denmark, Estonia, Finland, France, Germany, Greece, Hong Kong, Hungary, Iceland, Ireland, Israel, Italy, Japan, Korea (Republic of), Latvia, Liechtenstein, Lithuania, Luxembourg, Malta, Netherlands, Norway, Poland, Portugal, Romania, Singapore, Slovak Republic, Slovenia, Spain, Sweden, Switzerland, Taiwan, or United Kingdom);

(2) A Free Trade Agreement country (FTA)(Australia, Bahrain, Canada, Chile, Costa Rica, Dominican Republic, El Salvador, Guatemala, Honduras, Israel, Mexico, Morocco, Nicaragua, Oman, Peru, or Singapore); or

(3) A least developed country (Afghanistan, Angola, Bangladesh, Benin, Bhutan, Burkina Faso, Burundi, Cambodia, Central African Republic, Chad, Comoros, Democratic Republic of Congo, Djibouti, East Timor, Equatorial Guinea, Eritrea, Ethiopia, Gambia, Guinea, Guinea-Bissau, Haiti, Kiribati, Laos, Lesotho, Liberia, Madagascar, Malawi, Maldives, Mali, Mauritania, Mozambique, Nepal, Niger, Rwanda, Samoa, Sao Tome and Principe, Senegal, Sierra Leone, Solomon Islands, Somalia, Tanzania, Togo, Tuvalu, Uganda, Vanuatu, Yemen, or Zambia).

"Recovery Act designated country construction material" means a construction material that is a WTO GPA country construction material, an FTA country construction material, or a least developed country construction material.

APPENDIX 3C-5

60% DESIGN REPORT R6B

BASIS OF DESIGN REPORT

For

Lower Silver Creek – Reach 6B Final Design Project

(Moss Point Drive to Cunningham Avenue)

March 26, 2010

Prepared For:

Santa Clara Valley Water District

5700 Almaden Expressway
San Jose, CA 95118
(408) 265-2600

Prepared By:

MARK THOMAS & COMPANY, INC.
Providing Engineering, Surveying and Planning Services

1960 Zanker Road
San Jose, CA 95112
(408) 453-5373

In cooperation with:

H.T. Harvey & Associates;
Parikh Consultants, and;
GEOCON Inc.

Table of Contents

PROJECT OBJECTIVE 1

PROPOSED IMPROVEMENTS 1

INVESTIGATIONS / STUDIES 1

- Topographic Surveys 1
- Geotechnical Investigation 1
- Hazardous Materials Investigation 1
- Hydraulic Analysis 2

DESIGN CRITERIA 2

- Floodwall 2
- Erosion Control Blanket 2
- Maintenance Road 2
- Access Ramps 2
- Grade Control Structures 3
- Rip-rap 4
- Vegetation 4
- Right of Way 5
- Utilities 5
- Fence and Gates 5
- Traffic Handling 5
- Permitting 5

OUTSTANDING ISSUES 6

- Bridge Uplift 6
- Bridge Barrier 6
- Crane Pad 6

PROJECT OBJECTIVE

In 2009, the Santa Clara Valley Water District completed the design and construction of the Early Grading project on Lower Silver Creek – Reach 6B using American Recovery and Reinvestment Act (ARRA) funds. The Early Grading project increased the capacity of the creek by widening the channel's cross-section. However, the improvement was an interim solution that was not intended to contain the 100-year flood event. A follow-up project was planned to fully update this segment of the Creek to accommodate the 100-year flow.

The *Lower Silver Creek Reach 6B Final Design project* is the follow-up project whose primary purpose is to provide 100-year flood protection along Reach 6B of Lower Silver Creek in conformance with Santa Clara Valley Water District policies and National Resources Conservation Service (NRCS) guidelines.

PROPOSED IMPROVEMENTS

The work includes channel improvements for Lower Silver Creek between the upstream edge of the Moss Point Drive creek crossing structure and the downstream edge of the Cunningham Avenue creek crossing structure. The proposed channel cross section consists of floodwalls adjacent to District right of way fences, 1.5:1 side slopes, a depressed gravel maintenance road, a sediment transport channel bounded by rock slope protection, and a vegetated bench. Landscaping and irrigation will be placed on the side slopes and the vegetated bench.

INVESTIGATIONS / STUDIES

Topographic Surveys

Field surveys were conducted between January 25 and January 29, 2010. The survey included fence-to-fence surveys of the channel at 50-foot intervals between Moss Point Drive and Cunningham Avenue. Due to high water elevations, the survey did not include topographic points within the limits of the water. Further surveys will be conducted as the water recedes.

Geotechnical Investigation

Parikh Consultants completed review of previously prepared reports, and conducted field reviews of the site. The findings and recommendations are summarized in the Draft Geotechnical Investigation Report.

Hazardous Materials Investigation

GEOCON conducted field investigations in January 2010. Soil samples from three boreholes were collected. Groundwater and sediment samples were also collected.

Based on the results of the soil and sediment samples collected during the investigation, soil and sediment excavated during the flood control construction activities would likely be accepted by most

Class II or Class III landfills. It is recommended that the excavation contractor obtain acceptance for sediment reuse/disposal from the receiving location(s) prior to construction.

Some metals were reported at concentrations that exceeded one or more groundwater or surface water environmental screening levels (ESLs). Accordingly, groundwater discharge or disposal may be restricted based on metal content.

Hydraulic Analysis

Hydraulics Analysis was performed by Schaaf and Wheeler under a separate contract. The methodology, design criteria, analysis results, and design recommendations are documented in a report published in February 2010 and titled *Lower Silver Creek Reach 6B Draft Basis of Hydraulic Design*. The relevant recommendations are discussed in the Design Criteria section below.

DESIGN CRITERIA

Floodwall

The hydraulic report recommends construction of floodwalls along both banks of the entire length of the creek in Reach 6B. Floodwall heights will be based on the proposed top of floodwall elevations provided in Appendix C of the Hydraulic Design report. The report indicates that the headwalls for the existing structures are high enough to provide protection. Therefore, no improvements to the existing headwalls are proposed.

Erosion Control Blanket

The hydraulic report confirmed the adequacy of the North American Green's C125 BioNet (BN) double net coconut mesh as a suitable erosion control blanket. This blanket will provide the desired protection for the anticipated flow velocity, and is biodegradable.

Maintenance Road

The project includes a depressed maintenance road along the eastern bank. The hydraulic report indicates that 1-inch crushed rock placed on the maintenance path will be stable when subjected to flowing water. To maintain consistency with the previously completed Early Grading project, 1½-inch crushed rock will be specified.

Access Ramps

Fifteen-foot wide access ramps will provide connectivity from the streets to the maintenance road. These access ramps will be elevated to the height of the floodwall to form an integral flood protection mechanism. A 20-foot long flat space will be provided at the top of the access ramps to prevent high-centering of maintenance vehicle. The access ramps will be constructed of reinforced concrete underlain by a layer of permeable material.

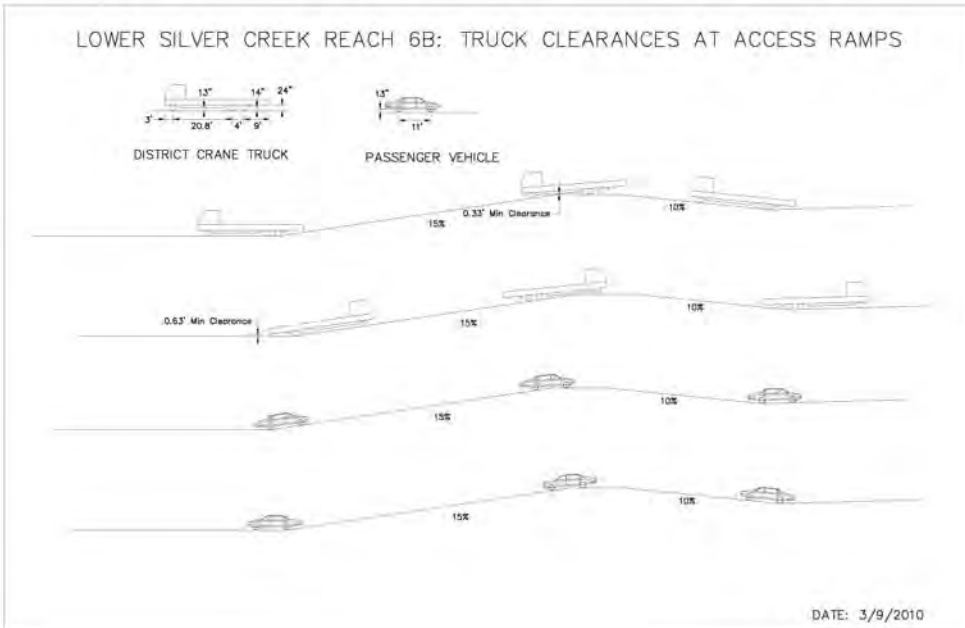

Grade Control Structures

The hydraulic report recommends placement of grade control structures at four locations. Three of these locations are within the project limits and have been incorporated into the design plans. One of the proposed grade control structures is located outside the project limits upstream of Cunningham Avenue.

NEH Part 654 Technical Supplement 14G (Grade Stabilization Techniques), Figure TS14G-13 will be used.

Figure TS14G–13 Top—built riprap grade control structure with a sheet pile cutoff wall (*top*); Bottom—launching of riprap at the grade control structure in response to bed degradation and local scour

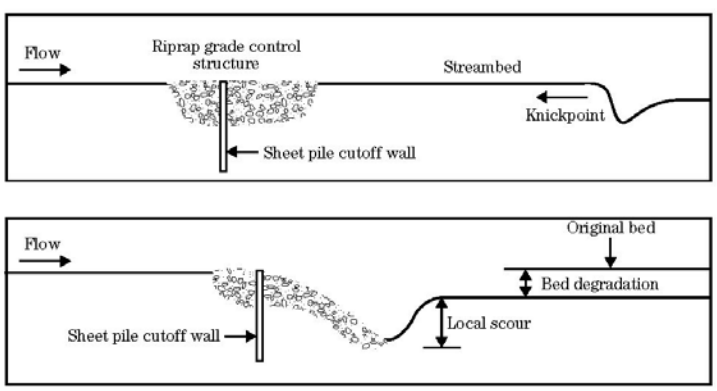

Rip-rap

- Figure 16-32 of NEH will be used for rip-rap placement.

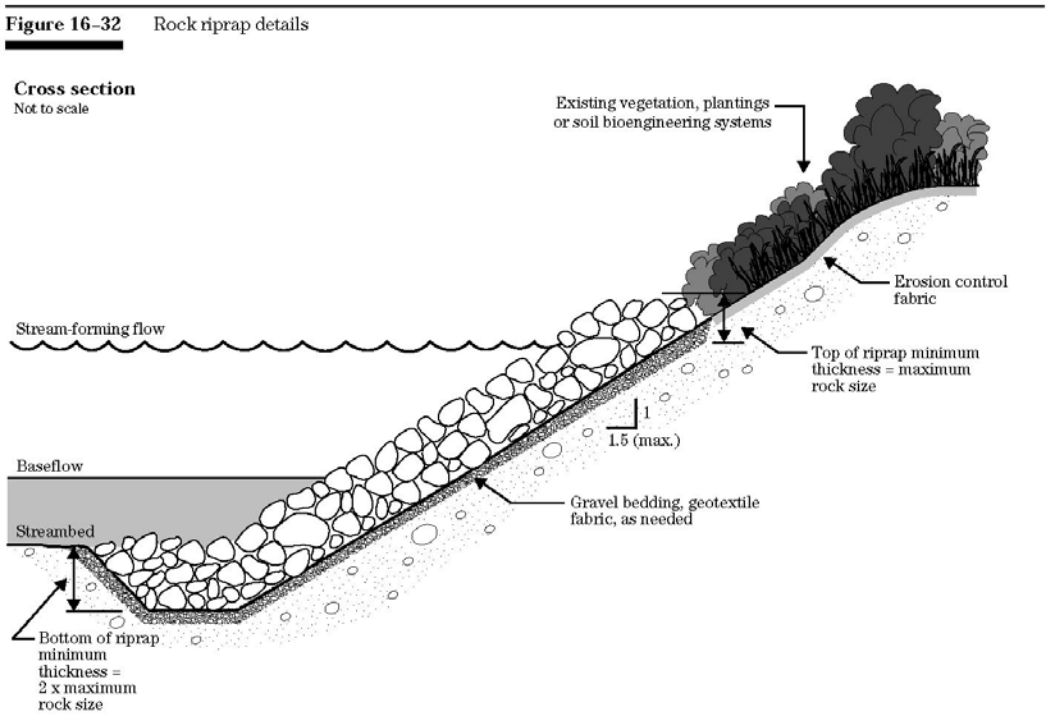

- Per Hydraulic Report, 100 lb rock is sufficient but the report recommends ¼-ton rock.
- Per National Engineering Handbook, Rip-rap thickness = max rock size = 2.25’ → use 2.5’.
- Per NEH, depth of bottom key of riprap = 2 x max rock size = 2 x 2.25 = 4.5’ → use 5.0’.
- Per NEH, Placement Method B, aka dumped RSP, will be used.
- Nonwoven geotextile fabric will be used underneath the riprap. Per NEH 16.vii recommendation, a 3” layer of bedding material will be placed on top of the fabric.

Vegetation

A two-season implementation of the revegetation concept is anticipated. In the first season, the below-grade irrigation components will be placed followed by application of hydroseeding and placement of erosion control blanket. In the second season, above-grade irrigation components will be placed and container plans will be planted. Watershed-specific plants will be provided by the District and the the plants will be grown by a qualified native plant nursery.

Per NRCS suggestions, a line of trees will be planted on the eastern bank between the maintenance road the top of the slope. The trees will be spaced at 100-foot intervals.

The contract documents will require a 3-year plant establishment period.

Right of Way

No right of way impacts to the adjacent private properties is anticipated.

Utilities

Pacific Gas & Electric Company

An overhead line crosses over the creek just upstream of the Moss Point Drive structure. The poles for this line are located on private property; however, a guy wire extends into District right of way at the east Bank. This guy wire conflicts with the retaining wall for the access ramp and therefore needs to be relocated.

Storm Drain Lines

A number of storm drain pipes owned by City of San Jose as well as by adjacent property owners outfall into the creek. These pipes will be maintained in place, but will be shortened to be flush with the proposed channel cross-section. Flap gates will be placed at the outfalls.

Fence and Gates

All boundary fencing is anticipated to be maintained in place. The District's fencing that control access to the creek will be maintained in place wherever possible. However, at some locations, modifications to the fence and gates are required due to conflict with the proposed flood wall.

For the elevated sections of the access ramps 6-foot high chain link fence will be installed on both sides to provide safety.

Traffic Handling

Most of the construction work will occur within the confines of the creek right of way. Therefore, disruptions to public traffic are limited to ingress/egress from the construction site. A traffic control plan similar to the Early Grading project will be adopted, whereby flaggers will guide construction vehicles in and out of the construction area.

Permitting

The District will obtain all necessary permits to the project. The permits are anticipated to include:

- Section 401 Water Quality Certification from the Regional Water Quality Control Board
- 1602 Streambed Alteration Agreement from California Department of Fish and Game
- Section 404 permit from US Army Corps of Engineers

OUTSTANDING ISSUES

Bridge Uplift

The hydraulic report prepared by Schaaf and Wheeler recommends that the bridge structures be checked for the increase in uplift (buoyant force) on the bridge superstructure that results from the construction of upstream and downstream floodwalls. Currently, this work is not part of the design scope.

Bridge Barrier

The design scope does not include evaluation of the ability of the existing bridge barriers to handle the hydrostatic pressure that they will experience in a flood event.

Crane Pad

The District has recently requested incorporation of a crane pad on the access ramps upstream of the Moss Point Drive and upstream of the Ocala Avenue crossings. Since the request was made close to the submittal date and since complete information is not yet available, the crane pads have not been incorporated in the design. We will seek further discussion with District staff after the Basis of Design submittal.

APPENDIX 3C-6

60% DESIGN PLANS R6B

MAP AND CONSTRUCTION PLAN

FOR

LOWER SILVER CREEK REACH 6B FINAL DESIGN

MOSS POINT DRIVE TO CUNNINGHAM AVENUE

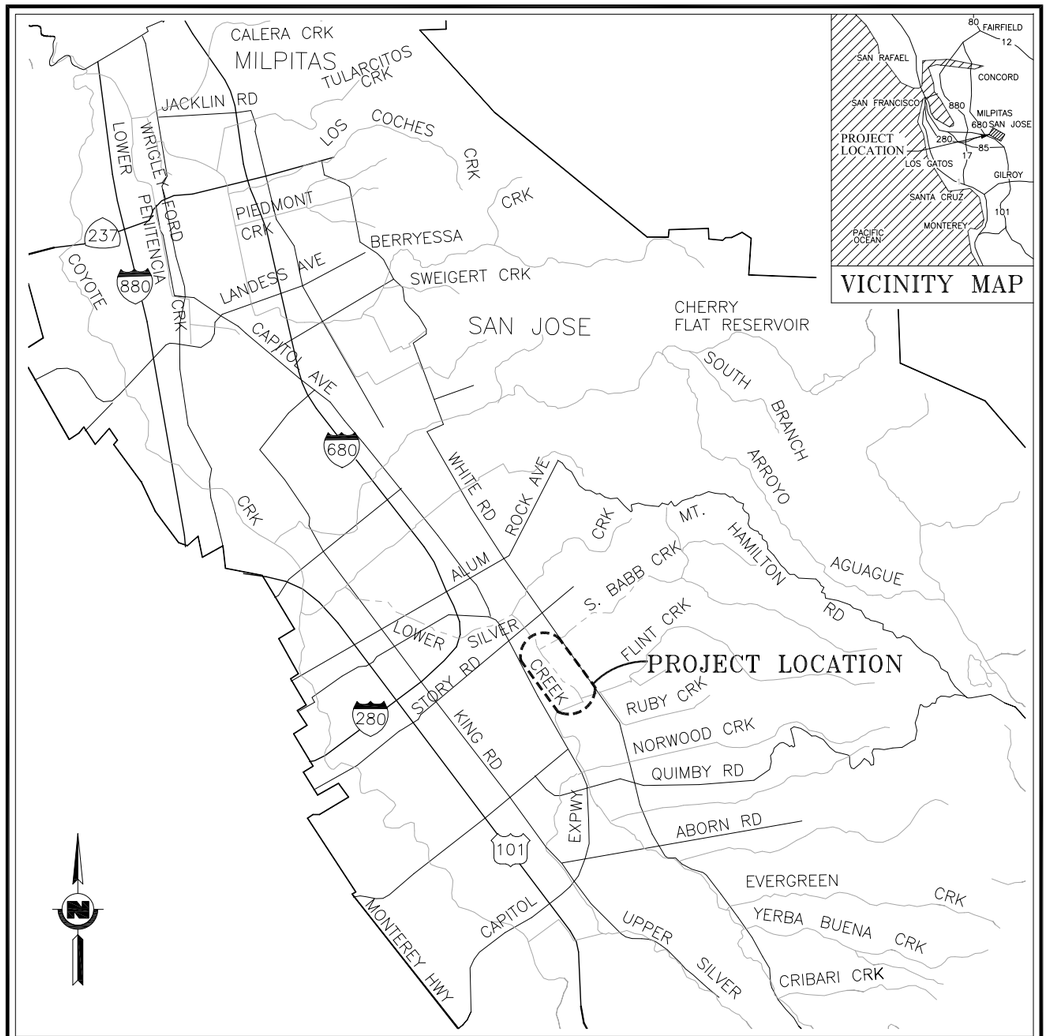

LOCATION MAP
SCALE: 1"=5,000'

Santa Clara Valley Water District SM

APPROVED BY:

DENNIS CHEONG — DATE
SENIOR PROJECT MANAGER
WATERSHED CAPITAL DIVISION

KATHERINE OVEN — DATE
DEPUTY OPERATING OFFICER
WATERSHED CAPITAL DIVISION

ACCEPTED BY DISTRICT:

LIANG LEE — DATE
DEPUTY OPERATING OFFICER
COYOTE & UVAS/LIANG WATERSHED DIVISION

PLANS PREPARED BY:

MARK THOMAS & COMPANY, INC.
1960 ZANKER ROAD
SAN JOSE, CA 95112

PRELIMINARY
NOT FOR CONSTRUCTION

NRCS Natural Resources Conservation Service

NRCS APPROVAL LETTER IS ON FILE

ENGINEERING CERTIFICATION AND APPROVAL:

REGISTERED PROFESSIONAL ENGINEER
JIMMY W. SIMS
No. 35458
Exp. 09/30/11
CIVIL
STATE OF CALIFORNIA

JIMMY W. SIMS — R.C.E. NO. 35458
PROJECT MANAGER

DATE: _____

PROJECT NUMBER
40264008

SHEET CODE:
G-1

PAGE NUMBER:
1 OF 53

USERNAME: brpantalea Mar 26, 2010-08:16:14am
FILENAME: G1-G4 - General Shts.dwg
DOCUMENT NUMBER: LOS-CY-G-4026-41815

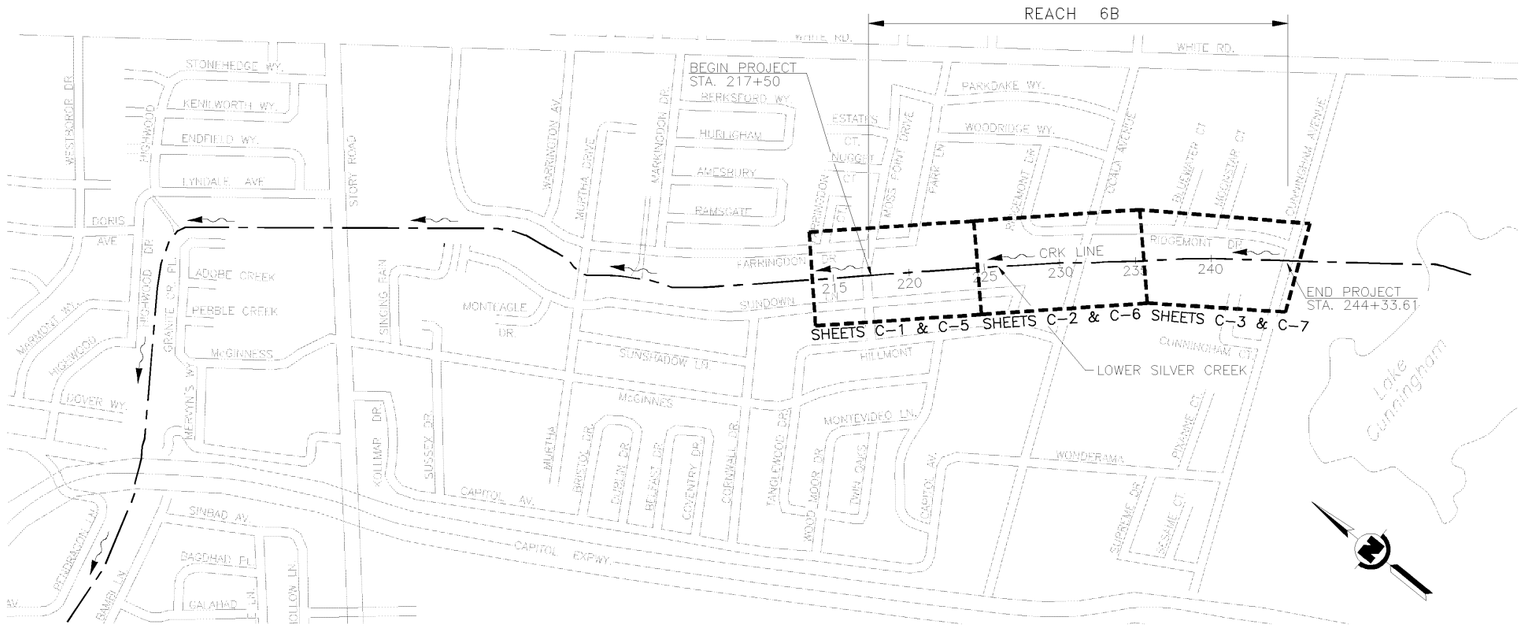

INDEX MAP

SCALE: 1"=500'

GENERAL NOTES

1. ALL EXISTING FACILITIES, STRUCTURES, TREES, FENCES, LANDSCAPING, ETC. DESIGNATED "EXIST." OR SHOWN EXISTING ARE TO REMAIN. ONLY THOSE SPECIFICALLY DESIGNATED FOR REMOVAL AS SHOWN ON THE DRAWINGS, OR AS DIRECTED BY THE ENGINEER SHALL BE REMOVED.
2. ALL REFERENCES MADE TO RIGHT OR LEFT AND ALL CROSS-SECTIONS SHOWN ON THE PLANS ARE VIEWED LOOKING UPSTREAM.
3. LOCATIONS AND DEPTHS OF EXISTING UNDERGROUND UTILITIES AS SHOWN ON THE PLANS ARE BASED ON INFORMATION FROM THE UTILITY COMPANIES AND ARE TO BE CONSIDERED AS APPROXIMATE ONLY.
4. PRIOR TO PERFORMING ANY WORK IN THE VICINITY OF EXISTING UNDERGROUND UTILITIES, THE CONTRACTOR SHALL VERIFY THEIR LOCATIONS AND DEPTHS AND TAKE PROPER PRECAUTIONS TO AVOID ANY DAMAGE TO THEM. CALL UNDERGROUND SERVICE ALERT AT (800) 277-2600 FOR LOCATION.
5. CONSTRUCTION OPERATIONS SHALL BE CONDUCTED IN SUCH A MANNER AS TO CAUSE AS LITTLE INCONVENIENCE TO THE RESIDENTS AS POSSIBLE.
6. THE CONTRACTOR SHALL COMPLY WITH THE PERMIT REQUIREMENTS OF THE STATE REGIONAL WATER BOARD (RWQCB) FOR STORM WATER DISCHARGES ASSOCIATED WITH CONSTRUCTION ACTIVITIES.
7. EXISTING CONTOURS SHOWN ON THE PLANS ARE BASED ON 100-FOOT CROSS SECTION SURVEYS AND MAY NOT FULLY REPRESENT ACTUAL FIELD CONDITIONS.

DESIGN NOTES

1. DISCHARGE CRITERIA:
   A. 1% (100-YR) FLOOD DISCHARGE, Q-100, TO LAKE CUNNINGHAM IS 2,810 CFS. FROM D/S CUNNINGHAM AVE. TO S. BABB CREEK, IT IS 2,810 CFS.
2. MANNING'S ROUGHNESS COEFFICIENT (N):

	HIGH	LOW
A. GRASSES & FORBS –	0.040	0.018
B. GRAVEL MAINT. ROAD –	0.030	0.022
C. DENSE WEEDS & AQUATIC PLANTS –	0.040	0.020
D. VEGETATED RSP –	0.060	0.035
E. RIPARIAN HABITAT –	0.150	0.618

3. UNIT STRESSES FOR REINFORCED CONCRETE ARE AS FOLLOWS:
   A. CONCRETE fc PSI = 4,000 OR AS OTHERWISE SPECIFIED.
   B. STEEL fs PSI = 60,000 OR AS OTHERWISE SPECIFIED.

REV	DESCRIPTION	DATE	APPR	REFERENCE INFORMATION AND NOTES

MARK THOMAS & COMPANY, INC.
1960 ZANKER ROAD
SAN JOSE, CA 95112

DATE 03/26/10
DESIGN BP
DRAWN AB
CHECKED AZ

REGISTERED PROFESSIONAL ENGINEER
JIMMY W. SIMS
No. 35458
Exp. 09/30/11
CIVIL
STATE OF CALIFORNIA

Santa Clara Valley Water District

ACCEPTED BY DISTRICT

PROJECT MANAGER DATE

PROJECT NAME AND SHEET DESCRIPTION:
FINAL DESIGN FOR LOWER SILVER CREEK
REACH 6B-MOSS POINT DRIVE TO
CUNNINGHAM AVENUE
INDEX MAP, GENERAL
AND DESIGN NOTES

SCALE AS SHOWN

VERIFY SCALES 0 1"
BAR IS ONE INCH ON ORIGINAL DRAWING. IF NOT ONE INCH ON THIS SHEET, ADJUST SCALES ACCORDINGLY

PROJECT NUMBER 40264008

SHEET CODE: G-2

PAGE NUMBER: 2 OF 53

USERNAME: abarajas Mar 25, 2010-02:53:31pm
FILENAME:G1-G4 - General Shts.dwg
DOCUMENT NUMBER: LOS-CY-G-4026-41816

SHEET CODE	SHEET DESCRIPTION	PAGE NO.
	GENERAL	
G-1	WATERSHED MAP, TITLE SHEET	1 OF 53
G-2	INDEX MAP, GENERAL AND DESIGN NOTES	2 OF 53
G-3	DRAWING INDEX	3 OF 53
G-4	ABBREVIATIONS AND LEGEND	4 OF 53
SV-1	SHEET LAYOUT AND MONUMENTS	5 OF 53
SV-2	R/W LAYOUT	6 OF 53
SV-3	R/W LAYOUT	7 OF 53
SV-4	R/W LAYOUT	8 OF 53
	DEMOLITION	
C-1	EXISTING TOPOGRAPHY AND DEMOLITION PLAN STA. 217+50 TO 224+50	9 OF 53
C-2	EXISTING TOPOGRAPHY AND DEMOLITION PLAN STA. 224+50 TO 235+50	10 OF 53
C-3	EXISTING TOPOGRAPHY AND DEMOLITION PLAN STA. 235+50 TO 244+33.61	11 OF 53
	CIVIL	
C-4	CHANNEL CONSTRUCTION CONTROL LINE LAYOUT AND GEOMETRY	12 OF 53
C-5	FINISH GRADING PLAN STA. 217+50 TO 224+50	13 OF 53
C-6	FINISH GRADING PLAN STA. 224+50 TO 235+50	14 OF 53
C-7	FINISH GRADING PLAN STA. 235+50 TO 244+33.61	15 OF 53
C-8	TYPICAL CROSS SECTIONS STA. 217+50 TO 244+33.61	16 OF 53
C-9	TYPICAL CROSS SECTIONS STA. 217+50 – 244+33.61	17 OF 53
C-10	EROSION CONTROL LIMITS	18 OF 53
C-11	TYPICAL EROSION CONTROL APPLICATION	19 OF 53
C-12	GRADE CONTROL STRUCTURE DETAIL	20 OF 53
C-13	TRAFFIC CONTROL PLAN MOSS POINT DRIVE	21 OF 53
C-14	TRAFFIC CONTROL PLAN OCALA AVENUE	22 OF 53
C-15	TRAFFIC CONTROL PLAN CUNNINGHAM AVENUE	23 OF 53
C-16	SCVWD STANDARD DETAILS	24 OF 53
C-17	SCVWD STANDARD DETAILS	25 OF 53
C-18	CROSS SECTIONS STA. 217+50 TO 222+00	26 OF 53
C-19	CROSS SECTIONS STA. 223+00 TO 228+00	27 OF 53
C-20	CROSS SECTIONS STA. 229+00 TO 233+00	28 OF 53
C-21	CROSS SECTIONS STA. 234+00 TO 239+00	29 OF 53
C-22	CROSS SECTIONS STA. 240+00 TO 244+33.61	30 OF 53

SHEET CODE	SHEET DESCRIPTION	PAGE NO.
	STRUCTURAL	
S-1	FLOOD WALL LAYOUT AND ELEVATION STA. FW1 45+00 TO 51+50 & FW3 72+00 TO 78+50	31 OF 53
S-2	FLOOD WALL LAYOUT AND ELEVATION STA. FW1 51+50 TO 58+50 & FW3 78+50 TO 85+25	32 OF 53
S-3	FLOOD WALL LAYOUT AND ELEVATION STA. FW2 59+00 TO 65+50 & FW4 86+00 TO 92+50	33 OF 53
S-4	FLOOD WALL LAYOUT AND ELEVATION STA. FW2 65+50 TO 71+50 & FW4 92+50 TO 99+25	34 OF 53
S-5	MOSS POINT SOUTH ACCESS RAMP AND CHANNEL TRANSITION	35 OF 53
S-6	OCALA AVENUE NORTH ACCESS RAMP AND CHANNEL TRANSITION	36 OF 53
S-7	OCALA AVENUE SOUTH ACCESS RAMP AND CHANNEL TRANSITION	37 OF 53
S-8	CUNNINGHAM AVENUE NORTH ACCESS RAMP AND CHANNEL TRANSITION	38 OF 53
S-9	FLOOD WALL AND RSP DETAILS	39 OF 53
S-10	FLOOD WALL AND RSP DETAILS	40 OF 53
S-11	FLOOD WALL AND RSP DETAILS	41 OF 53
	REVEGETATION	
I-1	IRRIGATION PLAN	42 OF 53
I-2	IRRIGATION PLAN	43 OF 53
I-3	IRRIGATION PLAN	44 OF 53
I-4	IRRIGATION PLAN	45 OF 53
I-5	IRRIGATION PLAN	46 OF 53
I-6	IRRIGATION PLAN	47 OF 53
I-7	IRRIGATION PLAN	48 OF 53
L-1	PLANTING PLAN	49 OF 53
L-2	PLANTING PLAN	50 OF 53
L-3	PLANTING PLAN	51 OF 53
L-4	PLANTING PLAN	52 OF 53
L-5	PLANTING PLAN	53 OF 53

REV	DESCRIPTION	DATE	APPR	REFERENCE INFORMATION AND NOTES

MARK THOMAS & COMPANY, INC.
1960 ZANKER ROAD
SAN JOSE, CA 95112

DATE 03/26/10
DESIGN BP
DRAWN AB
CHECKED AZ

REGISTERED PROFESSIONAL ENGINEER
JIMMY W. SIMS
No. 35458
Exp. 09/30/11
CIVIL
STATE OF CALIFORNIA

Santa Clara Valley Water District

ACCEPTED BY DISTRICT

PROJECT MANAGER DATE

PROJECT NAME AND SHEET DESCRIPTION:
FINAL DESIGN FOR LOWER SILVER CREEK REACH 6B-MOSS POINT DRIVE TO CUNNINGHAM AVENUE
DRAWING INDEX

SCALE AS SHOWN

VERIFY SCALES
0 1"
BAR IS ONE INCH ON ORIGINAL DRAWING. IF NOT ONE INCH ON THIS SHEET, ADJUST SCALES ACCORDINGLY

PROJECT NUMBER 40264008

SHEET CODE: G-3

PAGE NUMBER: 3 OF 53

USERNAME: abarajas Mar 25, 2010-02:53:32pm
FILENAME:G1-G4 - General Shts.dwg
DOCUMENT NUMBER: LOS-CY-G-4026-41816

GENERAL ABBREVIATIONS

ALT – ALTERNATE (– ALTERNATED)
AB – ANCHOR BOLT, – AGGREGATE BASE
AC – ASPHALT CONCRETE
ACI – AMERICAN CONCRETE INSTITUTE
ALIGN – ALIGNMENT (– ALIGN)
APPROX – APPROXIMATE (– APPROXIMATELY)
ABUT – ABUTMENT
ASSY – ASSEMBLY
ACP – ASBESTOS CEMENT PIPE
ASPH – ASPHALT
AP – ACCESS POINT
AV – AIR RELEASE VALVE
AVE – AVENUE

BC – BEGIN CURVE
BF – BOTH FACES
BM – BENCH MARK
BRNG – BEARING
BR – BRIDGE

BK – BANK
BLDG – BUILDING
BIT – BITUMINOUS
BOT – BOTTOM

C – CURVE, (– CHORD), CIVIL
CB – CATCH BASIN
CCP – CONCRETE (– CYLINDER PIPE)
CFS – CUBIC FEET PER SECOND
CIL – CENTERLINE
CIP – CAST IRON PIPE
CJ – CONSTRUCTION JOINT
CL – CENTER LINE OR CONTROL LINE
CLF – CHAIN LINK FENCE
CLR – CLEAR (– CLEARANCE)
CL–6 – CHAIN LINK FENCE (NUMBER = HEIGHT IN FEET)
CM – CENTIMETER
CMU – CONCRETE MASONRY UNIT
CMP – CORRUGATED METAL PIPE
CONC – CONCRETE
CONST – CONSTRUCT (CONSTRUCTION)
CONT – CONTINUOUS (– CONTROL)
CPT – CONE PENETRATION TEST
CT – COURT
CRK – CREEK
CY – CUBIC YARDS
CYL – CYLINDER
COL – COLUMN
C/C – CENTER TO CENTER

DBL – DOUBLE
DEG (°) – DEGREES
DET – DETAIL
DI – DROP INLET
DIA – DIAMETER
DIP – DUCTILE IRON PIPE
DR – DRIVE
D/S – DOWNSTREAM
DWG – DRAWING (– DRAWINGS)
DWN – DOWN

E – EAST, ELECTRIC
EA – EACH
EC – END CURVE
EF – EACH FACE
EG – EXISTING GRADE
EL/ELEV – ELEVATION
ELECT – ELECTRIC (ELECTRICAL)
ENGR – ENGINEER (ENGINEERING)
EP – EDGE OF PAVEMENT
ER – EXISTING RAMP
EW – EACH WAY
EXIST – EXISTING
EXPWY – EXPRESSWAY
E'LY – EASTERLY

FB – FREEBOARD
FC – FACE OF CURB
FD (Fd) – FOUND
FF – FAR (– FACE)
FG – FINISH GRADE
FH – FIRE HYDRANT
FNC – FENCING
FL – FLOWLINE
FT (') – FEET (– FOOT)
FTG – FOOTING
FWY – FREEWAY
F/W – FLOOD WALL

G – GAS
GA – GAUGE (GAGE)
GAL – GALVANIZE (GALVANIZED)
GB – GUY ANCHOR AND POLE
GB – GRADE BREAK
GFI – GROUND FAULT INTERRUPTER
GPM – GALLONS PER MINUTE
GR – GRADE OR GRATE
GRND – GROUND
GRP – GROUP
GP – GUY POLE
GV – GAS VALVE

H – HEIGHT
H&T – HUB AND TACK
HORIZ – HORIZONTAL
HP – HORSEPOWER, HINGEPOINT
HWY – HIGHWAY
HK – HOOK (APPLIED TO REBAR)

I – IRRIGATION
ID – INSIDE DIAMETER (DIMENSION)
IF – INSIDE FACE
IN (") – INCH (INCHES)
INV – INVERT
IP – IRON PIPE

JP – JOINT POLE
JT – JOINT
JUNCT – JUNCTION

K – KILO
Km – KILOMETER
KV – KILOVOLT
Kw – KILOWATT

L – LENGTH (LONG)/LEFT, LANDSCAPING
L & R – LEFT AND RIGHT
LN – LANE
LP – LIP OF GUTTER
LG – LONG
LOL – LAYOUT LINE

M – METER
MAINT – MAINTENANCE
MAX – MAXIMUM
MH – MANHOLE
MIN – MINIMUM
MON – MONUMENT
MATL – MATERIAL(S)

N – NORTH
NAD – NORTH AMERICAN DATUM
N/A – NOT APPLICABLE,NOT AVAILABLE
NF – NEAR FACE, NORTH BANK FLOODWALL
NGVD – NATIONAL GEODETIC VERTICAL DATUM
NTS – NOT TO SCALE
N'LY – NORTHERLY

OC – ON CENTER
OD – OUTSIDE DIAMETER (DIMENSION)
OF – OUTSIDE FACE
OH – OVERHEAD
OHET – OVERHEAD ELECTRICAL AND TELEPHONE
OPNG – OPENING

PB – PULL BOX
PC – POINT OF CURVATURE
PCC – PORTLAND CEMENT CONCRETE POINT OF COMPOUND CURVE
PG – PROFILE GRADE
PI – POINT OF INTERSECTION
POB – POINT OF BEGINNING
POT – POINT OF TANGENT
PP – POWER POLE
PRC – POINT OF REVERSE CURVE
PSI – POUNDS PER SQUARE INCH

PT – POINT/POINT OF TANGENT
PVC – POLYVINYL CHLORIDE (PIPE)
PVI – POINT OF VERTICAL INTERSECTION
PVMT – PAVEMENT
PED – PEDESTRIAN
PGE – PACIFIC GAS AND ELECTRIC

Q – DESIGN DISCHARGE (CFS)

R – RADIUS/RIGHT
RCB – REINFORCED CONCRETE BOX
RCP – REINFORCED CONCRETE PIPE
RD – ROAD
REF – REFERENCE (REFER)
REINF – REINFORCEMENT (REINFORCING)
REQ'D – REQUIRED
RR – RAILROAD
RTE – ROUTE
R/W OR ROW – RIGHT OF WAY

S – SOUTH, SLOPE, STRUCTURAL
SCRR – SACK CONCRETE RIP–RAP
SCSP – SACKED CONCRETE SLOPE PROTECTION
SCH – SCHEDULE
SCVWD – SANTA CLARA VALLEY WATER DISTRICT
SD – STORM DRAIN, STANDARD DETAIL
SE – SOUTHEAST
SEC (") – SECONDS
SECT – SECTION
SGL – SINGLE
SHT – SHEET
S'LY – SOUTHERLY
SPECS – SPECIFICATIONS
SQ FT – SQUARE FEET
SRA – SHADED RIPARIAN AREA/SHADED RIVERINE HABITAT AREA

SS – SANITARY SEWER, STAINLESS STEEL
SSCO – SANITARY SEWER CLEANOUT
SSMH – SANITARY SEWER MANHOLE
STA – STATION
STD – STANDARD
STL – STEEL
STR – STRUCTURE
SY – SQUARE YARDS
SYM – SYMMETRICAL

T – TANGENT, TELEPHONE
T/B – TOP & BOTTOM
TBM – TEMPORARY BENCH MARK
TC – TOP OF CURB
TCA – TEMPORARY CONSTRUCTION AREA
TCE – TEMPORARY CONSTRUCTION EASEMENT
TEL – TELEPHONE CABLE
TFC – TRAFFIC
TOB – TOP OF BANK
TOC – TOE OF CHANNEL
TOW – TOP OF WALL
TP – TELEPHONE POLE, TURNING POINT
TP–1 – TEST PIT (NUMBER=DESIGNATION/LOCATION

TS – TRAFFIC SIGNAL
TV – TELEVISION (CABLE OR FACILITY)
TYP – TYPICAL

UB – UTILITY BOX
UC – UTILITY CONDUIT
UE – UNDERGROUND ELECTRIC LINE
UG – UNDERGROUND
U.O.N. – UNLESS OTHERWISE NOTED
U/S – UPSTREAM
USC&GS – UNITED STATES COASTAL AND GEODETIC SURVEY

V – VOLTS
VCP – VITRIFIED CLAY PIPE
VERT – VERTICAL

W – WITH, WATER, WEST, WIDTH, (WIDE)
W/O – WITHOUT
WP – WATER PROOF, WORK PAINT
WT – WEIGHT
WD – WOOD (WOODEN)
WSE – WATER SURFACE ELEVATION
WSP – WATER SURFACE PROFILE
WV – WATER VALVE
WWF – WELDED WIRE FABRIC
W'LY – WESTERLY
WB

X–SECT – CROSS SECTION
Y – YARDS
Z – ZONE

LEGEND

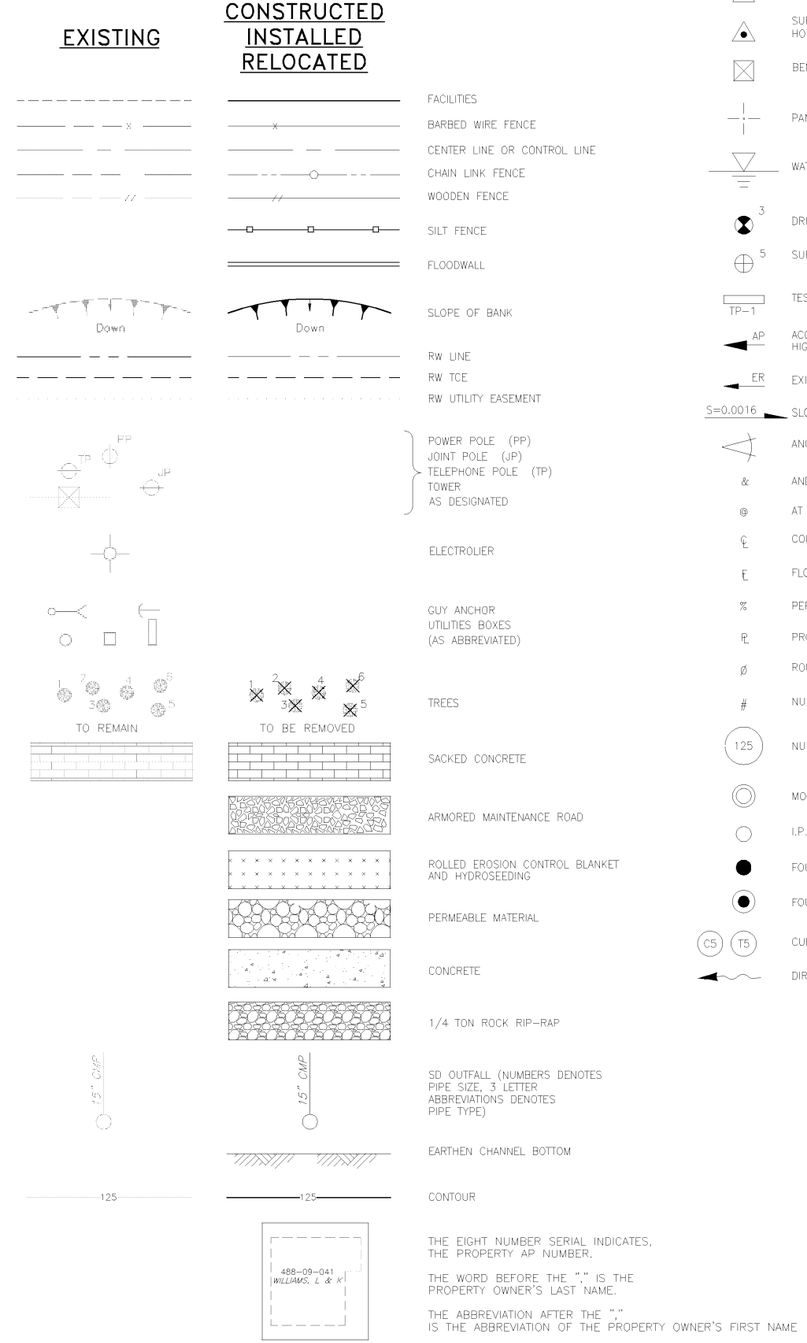

SYMBOLS

REV	DESCRIPTION	DATE	APPR	REFERENCE INFORMATION AND NOTES

MARK THOMAS & COMPANY, INC.
1960 ZANKER ROAD
SAN JOSE, CA 95112

DATE 03/26/10
DESIGN BP
DRAWN AB
CHECKED AZ

REGISTERED PROFESSIONAL ENGINEER
JIMMY W. SIMS
No. 35458
Exp. 09/30/11
CIVIL
STATE OF CALIFORNIA

Santa Clara Valley Water District

ACCEPTED BY DISTRICT
PROJECT MANAGER DATE

PROJECT NAME AND SHEET DESCRIPTION:
FINAL DESIGN FOR LOWER SILVER CREEK REACH 6B–MOSS POINT DRIVE TO CUNNINGHAM AVENUE
ABBREVIATIONS AND LEGEND

SCALE NOT TO SCALE
VERIFY SCALES 0 1"
BAR IS ONE INCH ON ORIGINAL DRAWING. IF NOT ONE INCH ON THIS SHEET, ADJUST SCALES ACCORDINGLY

PROJECT NUMBER 40264008
SHEET CODE: G–4
PAGE NUMBER: 4 OF 53

USERNAME: abarajas Mar 25, 2010–02:53:33pm
FILENAME:G1–G4 – General Shts.dwg
DOCUMENT NUMBER: LOS–CY–G–4026–41817

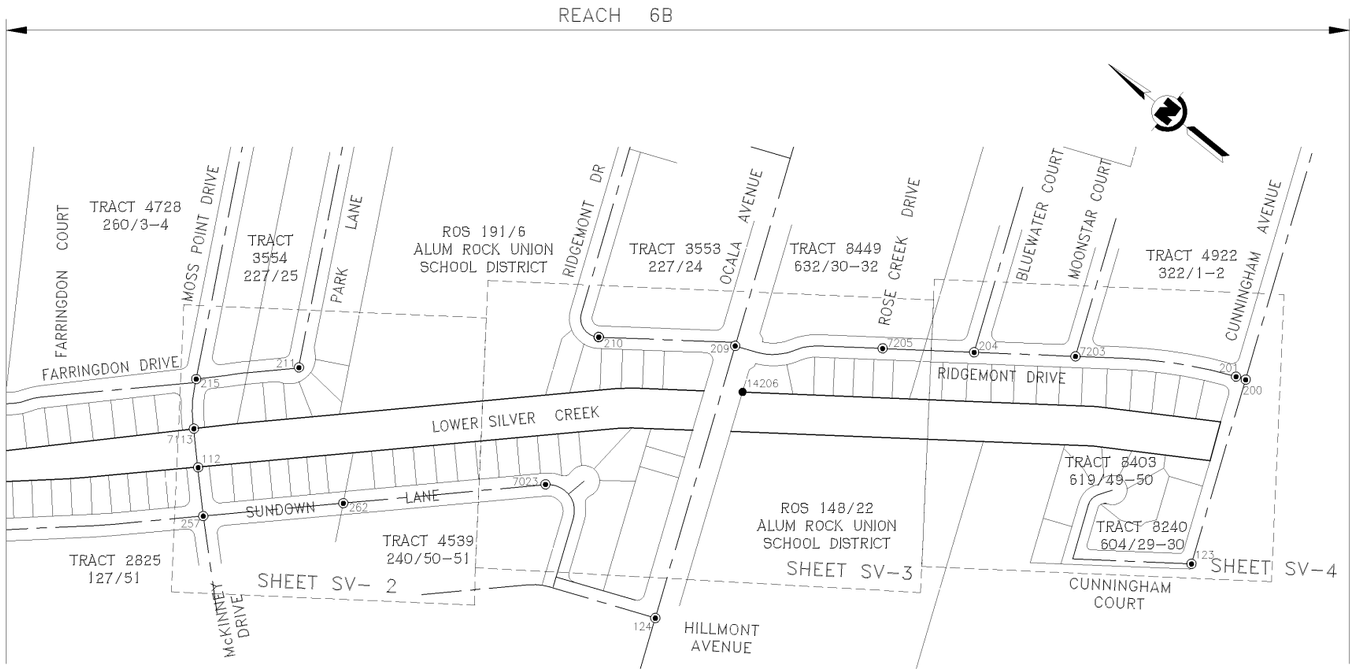

GEODETIC SURVEY CONTROL

PT. No.	NORTHING	EASTING	ELEV	DESCRIPTION
112	1951100.222	6179062.261	130.47	Fd Std City Mon C/L of Moss Point Drive and 130'± N'ly of the C/L of Sundown Lane no reference found
123	1948858.906	6180460.047		Fd Std City Mon Intersection of Cunningham Avenue and Cunningham Court per Tract 8240
124	1949897.255	6179482.882		Fd Std City Mon Intersection of Ocala Avenue and Hillmont Avenue per Tract 4539
200	1949041.927	6180933.634	131.26	Fd Std City Mon Intersection of Cunningham Avenue and Ridgemont Drive per Tract 4922
201	1949066.663	6180924.105		Fd Std City Mon C/L of Ridgemont Drive and 27'± N'ly of the C/L of Cunningham Avenue per Tract 4922
204	1949655.519	6180553.848		Fd Std City Mon Intersection of Ridgemont Drive and Bluewater Court per Tract 4922
209	1950167.450	6180182.333	130.38	Fd Std City Mon Intersection of Ocala Avenue and Ridgemont Drive per Tract 8449
210	1950468.037	6179980.849		Fd Std City Mon C/L of Ridgemont Drive and 364'± N'ly of the C/L of Ocala Avenue per Tract 3553
211	1951048.920	6179433.427		Fd Std City Mon Intersection of Farringdon Drive and Park Lane per Tract 3554
215	1951245.677	6179244.569		Fd Std City Mon Intersection of Moss Point Drive and Farringdon Drive per Tract 4728
257	1951010.126	6178968.505		Fd Std City Mon 4021 Intersection of Moss Point Drive and Sundown Lane per Tract 2825
262	1950737.189	6179220.900		Fd Std City Mon C/L of Sundown Lane and 372'± S'ly of the C/L of Moss Point Drive per Tract 4539
7023	1950342.235	6179585.856		Fd Std City Mon C/L of Sundown Lane and 68'± N'ly of the C/L of the Bulb in Sundown Lane per Tract 4539
7113	1951170.982	6179135.872		Fd Std City Mon C/L of Moss Point Drive and 133'± E'ly of the C/L of Farringdon Drive no reference found
7203	1949436.405	6180708.200		Fd Std City Mon Intersection of Ridgemont Drive and Moonstar Court per Tract 4922
7205	1949853.865	6180414.138		Fd Std City Mon Intersection of Ridgemont Drive and Rose Creek Drive per Tract 8449
14206	1950078.004	6180097.521		Fd 3/4"IP E'ly side of Silver Creek and 55'± S'ly of the C/L of Ocala Avenue per Tract 8449

NOTES

1. THE DIMENSIONS SHOWN ARE AS PER THE RECORD OF SURVEY FILED ON DECEMBER 15, 2004 IN BOOK 779 PAGES 7 THROUGH 15 SANTA CLARA COUNTY RECORDS.

2. NO TITLE REPORTS WERE PROVIDED FOR THIS SURVEY. EASEMENTS SHOWN ARE AS PER THE RECORDED MAPS ONLY. OWNERSHIP OF THE PARCELS WAS BASED UPON ASSESSOR'S INFORMATION ONLY.

SURVEYOR'S STATEMENT

THIS MAP CORRECTLY REPRESENTS A SURVEY MADE BY ME OR UNDER MY DIRECTION IN CONFORMANCE WITH THE REQUIREMENTS OF THE LAND SURVEYOR'S ACT AT THE REQUEST OF THE SANTA CLARA VALLEY WATER DISTRICT IN _____ 2010.

_____
JULIA MACRORY
LS NO. 7871
EXPIRATION 12-31-10

LEGEND

⊙	FOUND STANDARD CITY MONUMENT
- - - - -	EASEMENT LINE
B.S.L.	BUILDING SETBACK LINE
P.S.E.	PUBLIC SERVICE EASEMENT
P.S.D.E.	PRIVATE STORM DRAIN EASEMENT
S.D.E.	STORM DRAIN EASEMENT
W.C.E.	WIRE CLEARANCE EASEMENT

BASIS OF BEARINGS

THE BASIS OF BEARINGS HEREON IS BASED ON THE CALIFORNIA COORDINATE SYSTEM, 1983 NORTH AMERICAN DATUM 83 (1991.35 EPOCH) AS PER THE GEODETIC SURVEY CONTROL DESCRIBED IN THE VERTICAL DATUM STATEMENT SHOWN HEREON. ALL COORDINATES AND DISTANCES SHOWN ON THIS PLAN SET ARE GRID VALUES. MULTIPLY GRID DISTANCES BY 1.00004714 TO OBTAIN GROUND LEVEL DISTANCES.

BASIS OF ELEVATION

ELEVATIONS ARE BASED ON THE GEODETIC SURVEY CONTROL SHOWN ON SHEET SV-2 OF THE S.C.V.W.D. PLANS ENTITLED "LOWER SILVER CREEK REACHES 5 & 6 - MURTHA DRIVE TO CUNNINGHAM AVENUE", DATED 6/13/03. ELEVATION OF POINT 112 HELD AS 130.47 FEET NAVD 88.

REV	DESCRIPTION	DATE	APPR	REFERENCE INFORMATION AND NOTES

MARK THOMAS & COMPANY, INC.
1960 ZANKER ROAD
SAN JOSE, CA 95112

DATE 03/26/10
DESIGN BP
DRAWN CB/AB
CHECKED AZ

LICENSED LAND SURVEYOR
JULIA MACRORY
No. 7871
Exp. 12/31/10
STATE OF CALIFORNIA

Santa Clara Valley Water District

ACCEPTED BY DISTRICT

PROJECT MANAGER DATE

PROJECT NAME AND SHEET DESCRIPTION:
FINAL DESIGN FOR LOWER SILVER CREEK
REACH 6B-MOSS POINT DRIVE TO
CUNNINGHAM AVENUE
SHEET LAYOUT AND MONUMENTS

SCALE NO SCALE
VERIFY SCALES 0 1"
BAR IS ONE INCH ON ORIGINAL DRAWING IF NOT ONE INCH ON THIS SHEET, ADJUST

PROJECT NUMBER 40264008
SHEET CODE: SV-1
PAGE NUMBER: 5 OF 53

USERNAME: brpantale Mar 26, 2010-11:47:46am
FILENAME: W:\SCVWD-SJ-0109-Lower Silver Creek-6B Final Design\CADD\PS&E_Basis\SV-1.DWG
DOCUMENT NUMBER: LOS-CY-SV-4026-41818

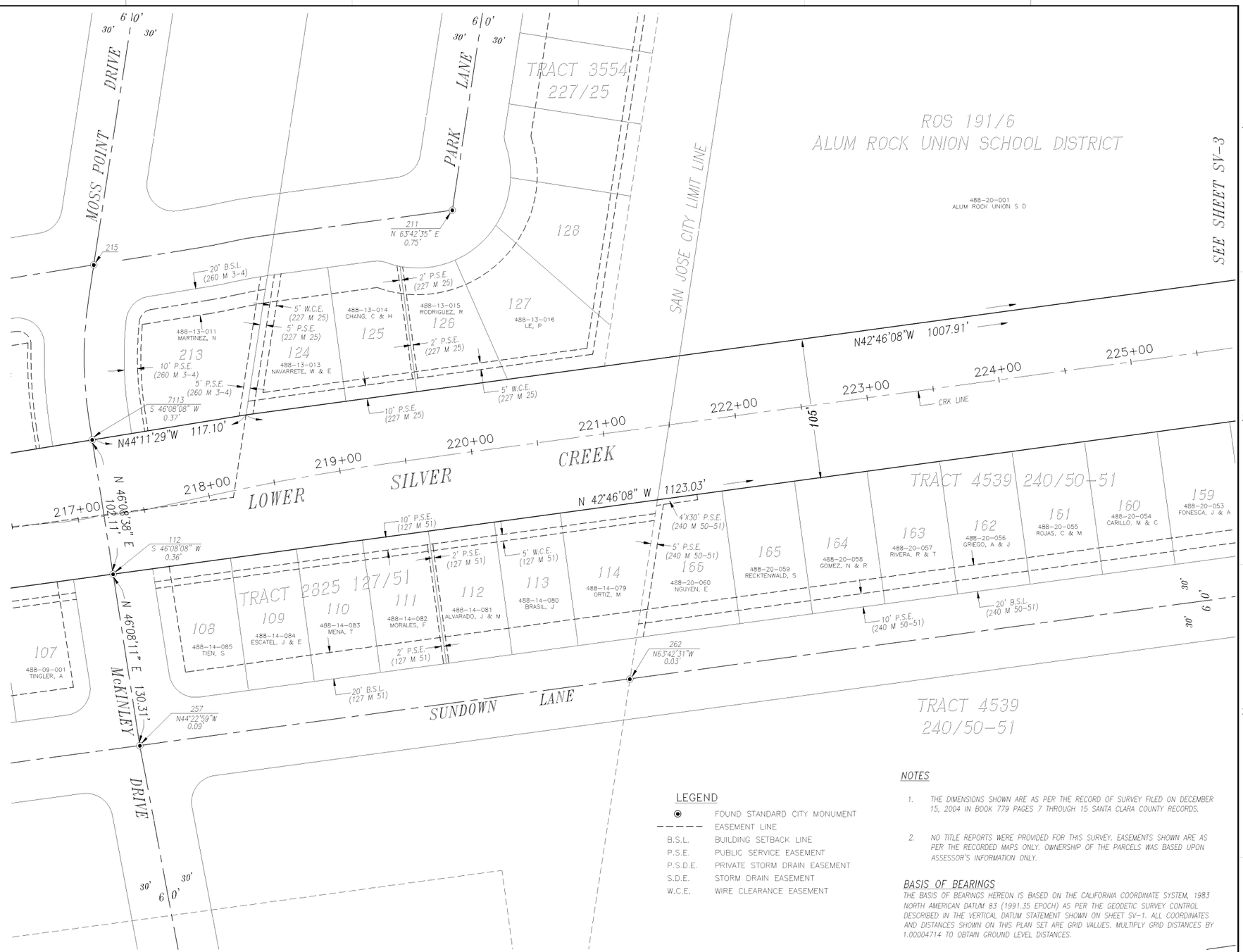

LEGEND

◉	FOUND STANDARD CITY MONUMENT
– – – – –	EASEMENT LINE
B.S.L.	BUILDING SETBACK LINE
P.S.E.	PUBLIC SERVICE EASEMENT
P.S.D.E.	PRIVATE STORM DRAIN EASEMENT
S.D.E.	STORM DRAIN EASEMENT
W.C.E.	WIRE CLEARANCE EASEMENT

NOTES

1. THE DIMENSIONS SHOWN ARE AS PER THE RECORD OF SURVEY FILED ON DECEMBER 15, 2004 IN BOOK 779 PAGES 7 THROUGH 15 SANTA CLARA COUNTY RECORDS.

2. NO TITLE REPORTS WERE PROVIDED FOR THIS SURVEY. EASEMENTS SHOWN ARE AS PER THE RECORDED MAPS ONLY. OWNERSHIP OF THE PARCELS WAS BASED UPON ASSESSOR'S INFORMATION ONLY.

BASIS OF BEARINGS

THE BASIS OF BEARINGS HEREON IS BASED ON THE CALIFORNIA COORDINATE SYSTEM, 1983 NORTH AMERICAN DATUM 83 (1991.35 EPOCH) AS PER THE GEODETIC SURVEY CONTROL DESCRIBED IN THE VERTICAL DATUM STATEMENT SHOWN ON SHEET SV-1. ALL COORDINATES AND DISTANCES SHOWN ON THIS PLAN SET ARE GRID VALUES. MULTIPLY GRID DISTANCES BY 1.00004714 TO OBTAIN GROUND LEVEL DISTANCES.

REV	DESCRIPTION	DATE	APPR	REFERENCE INFORMATION AND NOTES

MARK THOMAS & COMPANY, INC.
1960 ZANKER ROAD
SAN JOSE, CA 95112

DATE 03/26/10
DESIGN BP
DRAWN CB/AB
CHECKED AZ

LICENSED LAND SURVEYOR — JULIA MACRORY — No. 7871 — Exp. 12/31/10 — STATE OF CALIFORNIA

Santa Clara Valley Water District

ACCEPTED BY DISTRICT

PROJECT MANAGER DATE

PROJECT NAME AND SHEET DESCRIPTION:
FINAL DESIGN FOR LOWER SILVER CREEK
REACH 6B–MOSS POINT DRIVE TO
CUNNINGHAM AVENUE
R/W LAYOUT

SCALE 1"=40'
VERIFY SCALES 0 1"
BAR IS ONE INCH ON ORIGINAL DRAWING. IF NOT ONE INCH ON THIS SHEET, ADJUST

PROJECT NUMBER 40264008
SHEET CODE: SV–2
PAGE NUMBER: 6 OF 53

USERNAME: brpantale@tar 26, 2010-11:48:07am
FILENAME: W:\SCVWD-SJ-0109-Lower Silver Creek-6B Final Design\CADD\PS&E_Basis\SV-2.DWG
DOCUMENT NUMBER: LOS-CY-SV-4026-41819

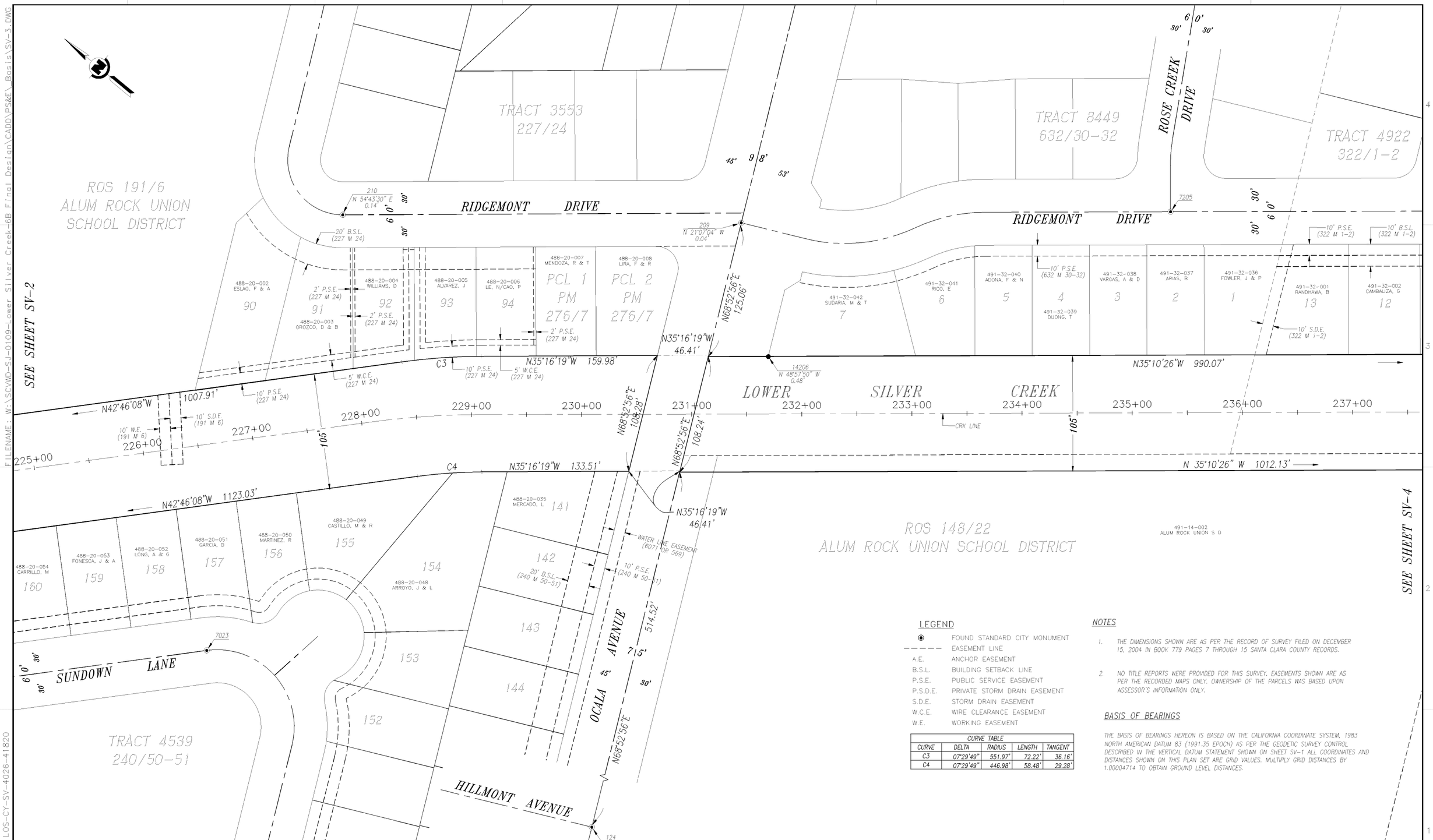

LEGEND

◉	FOUND STANDARD CITY MONUMENT
- - - - -	EASEMENT LINE
A.E.	ANCHOR EASEMENT
B.S.L.	BUILDING SETBACK LINE
P.S.E.	PUBLIC SERVICE EASEMENT
P.S.D.E.	PRIVATE STORM DRAIN EASEMENT
S.D.E.	STORM DRAIN EASEMENT
W.C.E.	WIRE CLEARANCE EASEMENT
W.E.	WORKING EASEMENT

CURVE TABLE

CURVE	DELTA	RADIUS	LENGTH	TANGENT
C3	07°29'49"	551.97'	72.22'	36.16'
C4	07°29'49"	446.98'	58.48'	29.28'

NOTES

1. THE DIMENSIONS SHOWN ARE AS PER THE RECORD OF SURVEY FILED ON DECEMBER 15, 2004 IN BOOK 779 PAGES 7 THROUGH 15 SANTA CLARA COUNTY RECORDS.
2. NO TITLE REPORTS WERE PROVIDED FOR THIS SURVEY. EASEMENTS SHOWN ARE AS PER THE RECORDED MAPS ONLY. OWNERSHIP OF THE PARCELS WAS BASED UPON ASSESSOR'S INFORMATION ONLY.

BASIS OF BEARINGS

THE BASIS OF BEARINGS HEREON IS BASED ON THE CALIFORNIA COORDINATE SYSTEM, 1983 NORTH AMERICAN DATUM 83 (1991.35 EPOCH) AS PER THE GEODETIC SURVEY CONTROL DESCRIBED IN THE VERTICAL DATUM STATEMENT SHOWN ON SHEET SV-1 ALL COORDINATES AND DISTANCES SHOWN ON THIS PLAN SET ARE GRID VALUES. MULTIPLY GRID DISTANCES BY 1.00004714 TO OBTAIN GROUND LEVEL DISTANCES.

REV	DESCRIPTION	DATE	APPR

REFERENCE INFORMATION AND NOTES

MARK THOMAS & COMPANY, INC.
1960 ZANKER ROAD
SAN JOSE, CA 95112

DATE 03/26/10
DESIGN BP
DRAWN CB/AB
CHECKED AZ

LICENSED LAND SURVEYOR — JULIA MACRORY — No. 7871 — Exp. 12/31/10 — STATE OF CALIFORNIA

Santa Clara Valley Water District

ACCEPTED BY DISTRICT

PROJECT MANAGER DATE

PROJECT NAME AND SHEET DESCRIPTION:

FINAL DESIGN FOR LOWER SILVER CREEK REACH 6B–MOSS POINT DRIVE TO CUNNINGHAM AVENUE

R/W LAYOUT

SCALE 1"=40'

VERIFY SCALES 0 1" BAR IS ONE INCH ON ORIGINAL DRAWING IF NOT ONE INCH ON THIS SHEET, ADJUST

PROJECT NUMBER 40264008

SHEET CODE: SV–3

PAGE NUMBER: 7 OF 53

USERNAME: brpantale@mar 26, 2010-11:48:20am
FILENAME: W:\SCVWD-SJ-0109-Lower Silver Creek-6B Final Design\CADD\PS&E_Basis\SV-3.DWG
DOCUMENT NUMBER: LOS-CY-SV-4026-41820

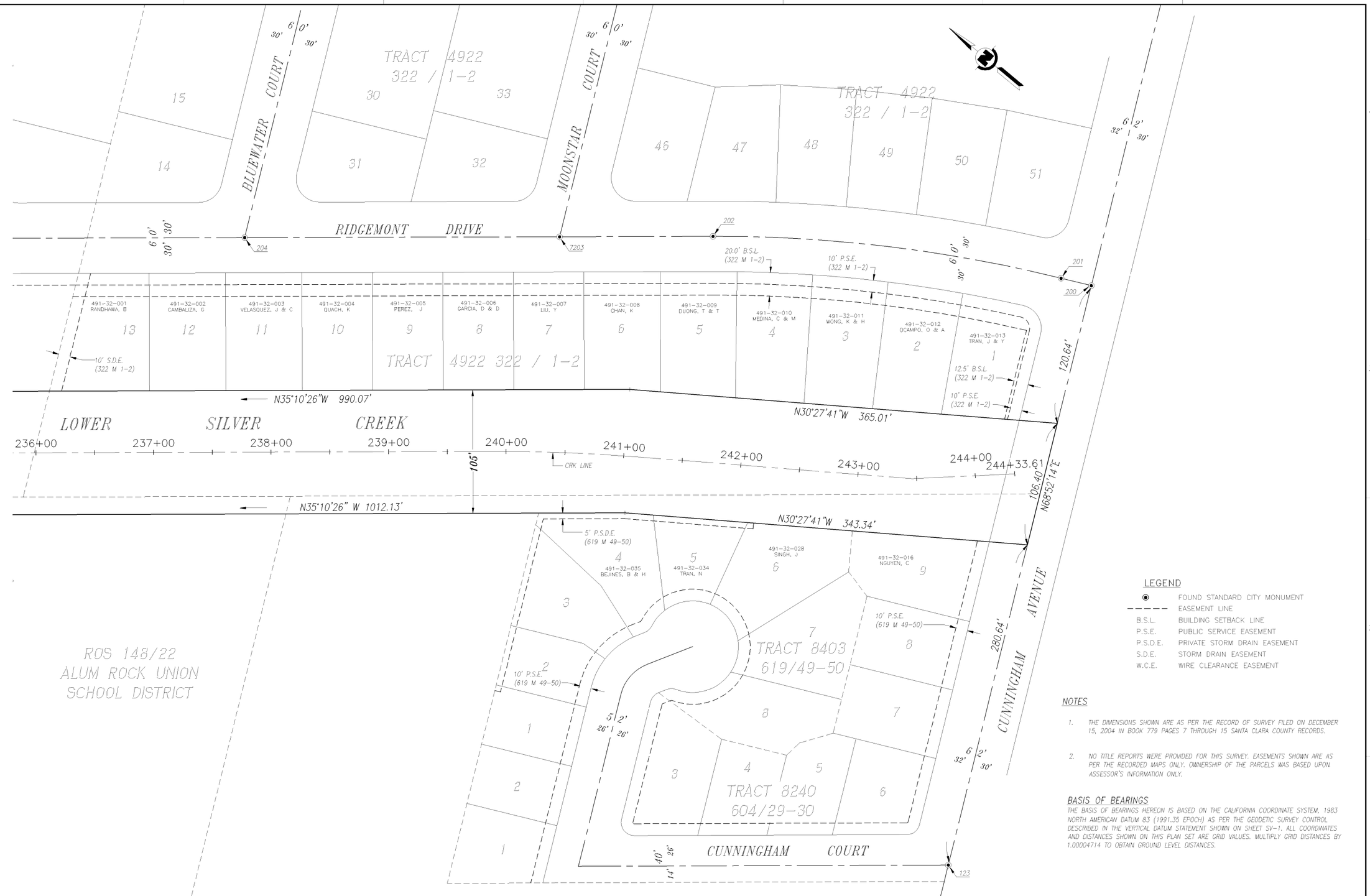

LEGEND

⊙	FOUND STANDARD CITY MONUMENT
- - - - -	EASEMENT LINE
B.S.L.	BUILDING SETBACK LINE
P.S.E.	PUBLIC SERVICE EASEMENT
P.S.D.E.	PRIVATE STORM DRAIN EASEMENT
S.D.E.	STORM DRAIN EASEMENT
W.C.E.	WIRE CLEARANCE EASEMENT

NOTES

1. THE DIMENSIONS SHOWN ARE AS PER THE RECORD OF SURVEY FILED ON DECEMBER 15, 2004 IN BOOK 779 PAGES 7 THROUGH 15 SANTA CLARA COUNTY RECORDS.
2. NO TITLE REPORTS WERE PROVIDED FOR THIS SURVEY. EASEMENTS SHOWN ARE AS PER THE RECORDED MAPS ONLY. OWNERSHIP OF THE PARCELS WAS BASED UPON ASSESSOR'S INFORMATION ONLY.

BASIS OF BEARINGS

THE BASIS OF BEARINGS HEREON IS BASED ON THE CALIFORNIA COORDINATE SYSTEM, 1983 NORTH AMERICAN DATUM 83 (1991.35 EPOCH) AS PER THE GEODETIC SURVEY CONTROL DESCRIBED IN THE VERTICAL DATUM STATEMENT SHOWN ON SHEET SV-1. ALL COORDINATES AND DISTANCES SHOWN ON THIS PLAN SET ARE GRID VALUES. MULTIPLY GRID DISTANCES BY 1.00004714 TO OBTAIN GROUND LEVEL DISTANCES.

REV	DESCRIPTION	DATE	APPR	REFERENCE INFORMATION AND NOTES

MARK THOMAS & COMPANY, INC.
1960 ZANKER ROAD
SAN JOSE, CA 95112

DATE 03/26/10
DESIGN BP
DRAWN CB/AB
CHECKED AZ

LICENSED LAND SURVEYOR
JULIA MACRORY
No. 7871
Exp. 12/31/10
STATE OF CALIFORNIA

Santa Clara Valley Water District

ACCEPTED BY DISTRICT

PROJECT MANAGER DATE

PROJECT NAME AND SHEET DESCRIPTION:
FINAL DESIGN FOR LOWER SILVER CREEK
REACH 6B-MOSS POINT DRIVE TO
CUNNINGHAM AVENUE
R/W LAYOUT

SCALE 1"=40'
VERIFY SCALES 0 1"
BAR IS ONE INCH ON ORIGINAL DRAWING IF NOT ONE INCH ON THIS SHEET, ADJUST

PROJECT NUMBER 40264008
SHEET CODE: SV-4
PAGE NUMBER: 8 OF 53

USERNAME: brpantale@mar 26, 2010-11:48:33am
FILENAME: W:\SCVWD-SJ-0109-Lower Silver Creek-6B Final Design\CADD\PS&E_Basis\SV-4.DWG
DOCUMENT NUMBER: LOS-CY-SV-4026-41821

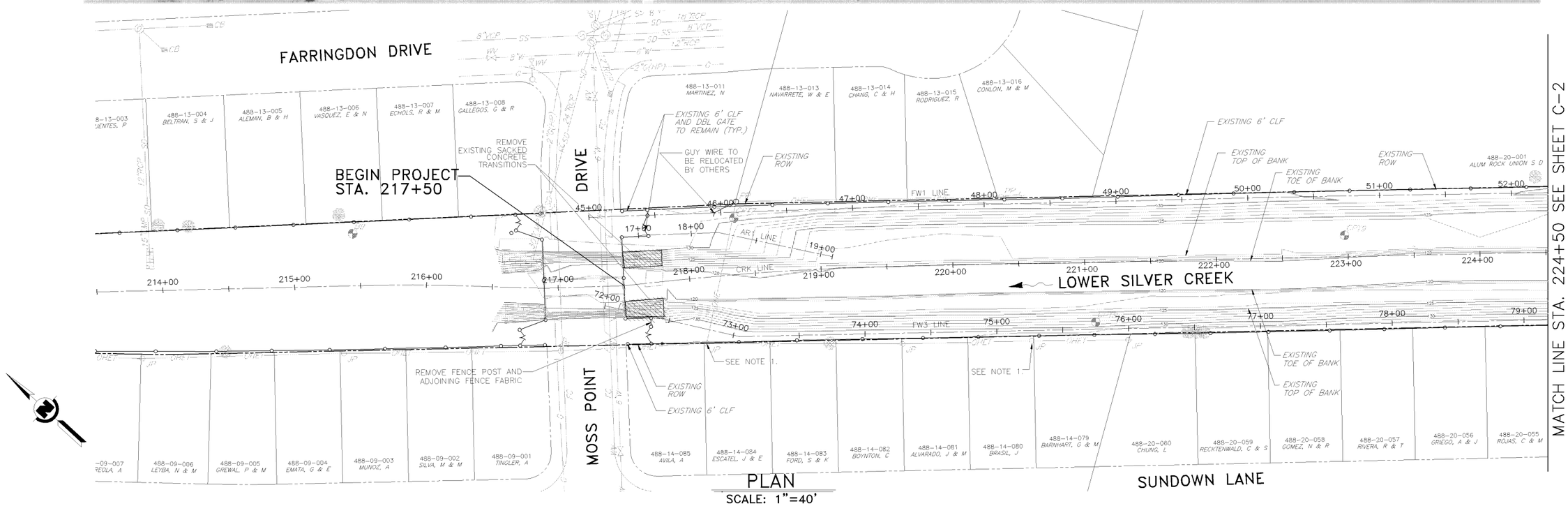

PLAN
SCALE: 1"=40'

REV	DESCRIPTION	DATE	APPR

REFERENCE INFORMATION AND NOTES

1. EXISTING JOINT POLES AND OVERHEAD UTILITY LINES SHALL REMAIN IN PLACE AND PROTECTED DURING CONSTRUCTION.
2. EXISTING FENCE, UNLESS SPECIFICALLY NOTED, SHALL REMAIN IN PLACE AND PROTECTED DURING CONSTRUCTION.
3. AERIAL PHOTOS WERE TAKEN ON OR ABOUT _____, 200_. THEY DO NOT REFLECT IMPROVEMENTS BY THE EARLY GRADING PROJECT.

MARK THOMAS & COMPANY, INC.
1960 ZANKER ROAD
SAN JOSE, CA 95112

DATE 03/26/10
DESIGN BP
DRAWN AB
CHECKED AZ

REGISTERED PROFESSIONAL ENGINEER
JIMMY W. SIMS
No. 35458
Exp. 09/30/11
CIVIL
STATE OF CALIFORNIA

Santa Clara Valley Water District

ACCEPTED BY DISTRICT

PROJECT MANAGER DATE

PROJECT NAME AND SHEET DESCRIPTION:

FINAL DESIGN FOR LOWER SILVER CREEK REACH 6B-MOSS POINT DRIVE TO CUNNINGHAM AVENUE

EXISTING TOPOGRAPHY AND DEMOLITION PLAN STA. 217+50 TO STA. 224+50

SCALE: AS SHOWN

VERIFY SCALES: 0 1"
BAR IS ONE INCH ON ORIGINAL DRAWING. IF NOT ONE INCH ON THIS SHEET, ADJUST SCALES ACCORDINGLY

PROJECT NUMBER: 40264008

SHEET CODE: C-1

PAGE NUMBER: 9 OF 53

DOCUMENT NUMBER: LOS-CY-C-4026-41822

USERNAME: abarajas Mar 25, 2010-02:54:41pm
FILENAME: C1-C3 - Exist Topo & Demo.dwg

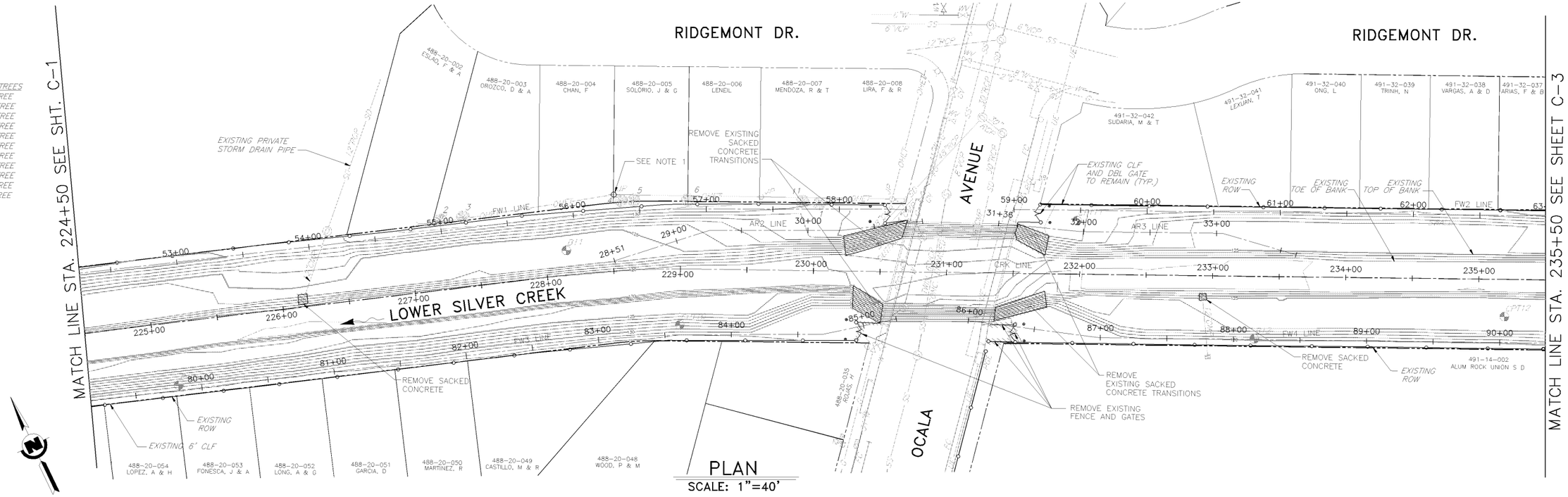

TABLE OF TREES

1	30" TREE
2	12" TREE
3	6" TREE
4	30" TREE
5	12" TREE
6	30" TREE
7	12" TREE
8	18" TREE
9	18" TREE
10	18" TREE
11	8" TREE

PLAN
SCALE: 1"=40'

REV	DESCRIPTION	DATE	APPR

REFERENCE INFORMATION AND NOTES

1. EXISTING JOINT POLES AND OVERHEAD UTILITY LINES SHALL REMAIN IN PLACE AND PROTECTED DURING CONSTRUCTION.
2. EXISTING FENCE, UNLESS SPECIFICALLY NOTED, SHALL REMAIN IN PLACE AND PROTECTED DURING CONSTRUCTION.
3. AERIAL PHOTOS WERE TAKEN ON OR ABOUT _____, 200_. THEY DO NOT REFLECT IMPROVEMENTS BY THE EARLY GRADING PROJECT.

MARK THOMAS & COMPANY, INC.
1960 ZANKER ROAD
SAN JOSE, CA 95112

DATE 03/26/10
DESIGN BP
DRAWN AB
CHECKED AZ

REGISTERED PROFESSIONAL ENGINEER
JIMMY W. SIMS
No. 35458
Exp. 09/30/11
CIVIL
STATE OF CALIFORNIA

Santa Clara Valley Water District

ACCEPTED BY DISTRICT

PROJECT MANAGER DATE

PROJECT NAME AND SHEET DESCRIPTION:
FINAL DESIGN FOR LOWER SILVER CREEK
REACH 6B-MOSS POINT DRIVE TO
CUNNINGHAM AVENUE
EXISTING TOPOGRAPHY AND DEMOLITION PLAN
STA. 224+50 TO STA. 235+50

SCALE: AS SHOWN

VERIFY SCALES 0 1"
BAR IS ONE INCH ON ORIGINAL DRAWING. IF NOT ONE INCH ON THIS SHEET, ADJUST SCALES ACCORDINGLY

PROJECT NUMBER: 40264008

SHEET CODE: C-2

PAGE NUMBER: 10 OF 53

USERNAME: abarajas Mar 25, 2010-02:55:05pm
FILENAME:C1-C3 - Exist Topo & Demo.dwg
DOCUMENT NUMBER: LOS-CY-C-4026-41823

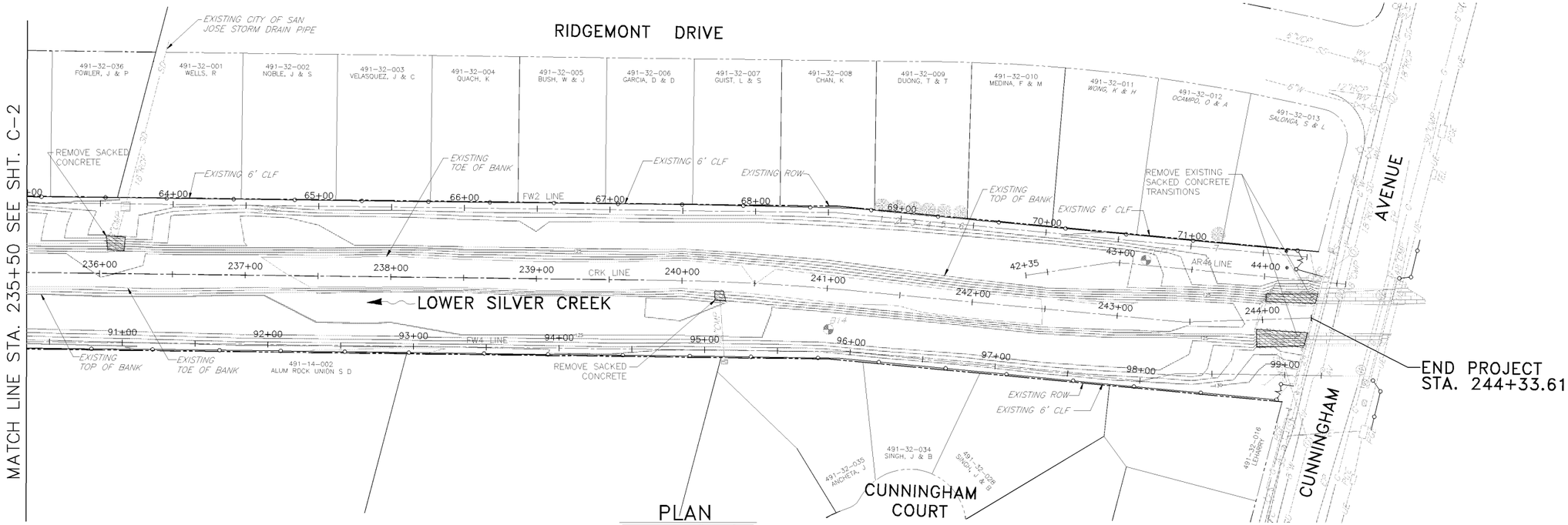

TABLE OF TREES

1	30" TREE
2	12" TREE
3	6" TREE
4	30" TREE
5	12" TREE
6	30" TREE
7	12" TREE
8	18" TREE
9	18" TREE
10	18" TREE
11	8" TREE

PLAN
SCALE: 1"=40'

REV	DESCRIPTION	DATE	APPR

REFERENCE INFORMATION AND NOTES

1. EXISTING JOINT POLES AND OVERHEAD UTILITY LINES SHALL REMAIN IN PLACE AND PROTECTED DURING CONSTRUCTION.
2. EXISTING FENCE, UNLESS SPECIFICALLY NOTED, SHALL REMAIN IN PLACE AND PROTECTED DURING CONSTRUCTION.
3. AERIAL PHOTOS WERE TAKEN ON OR ABOUT _____, 200_. THEY DO NOT REFLECT IMPROVEMENTS BY THE EARLY GRADING PROJECT.

MARK THOMAS & COMPANY, INC.
1960 ZANKER ROAD
SAN JOSE, CA 95112

DATE 03/26/10
DESIGN BP
DRAWN AB
CHECKED AZ

REGISTERED PROFESSIONAL ENGINEER
JIMMY W. SIMS
No. 35458
Exp. 09/30/11
CIVIL
STATE OF CALIFORNIA

Santa Clara Valley Water District

ACCEPTED BY DISTRICT

PROJECT MANAGER DATE

PROJECT NAME AND SHEET DESCRIPTION:

FINAL DESIGN FOR LOWER SILVER CREEK REACH 6B–MOSS POINT DRIVE TO CUNNINGHAM AVENUE

EXISTING TOPOGRAPHY AND DEMOLITION PLAN STA. 235+50 TO STA. 244+33.61

SCALE: AS SHOWN

VERIFY SCALES 0 1"
BAR IS ONE INCH ON ORIGINAL DRAWING. IF NOT ONE INCH ON THIS SHEET, ADJUST SCALES ACCORDINGLY

PROJECT NUMBER: 40264008

SHEET CODE: C–3

PAGE NUMBER: 11 OF 53

USERNAME: abarajas Mar 25, 2010-02:55:29pm
FILENAME: C1-C3 – Exist Topo & Demo.dwg
DOCUMENT NUMBER: LOS-CY-C-4026-41823

CREEK CENTERLINE CURVE TABLE				
CURVE	LENGTH	RADIUS	DELTA ANGLE	TANGENT
C1	52.22	1000.00	2°59'31"	26.11
C2	164.87	2000.00	4°43'23"	82.48
C3	100.28	750.00	7°39'39"	50.21
C4	123.37	1500.00	4°42'45"	61.72
C5	96.98	800.00	6°56'46"	48.55
C6	87.41	750.00	6°40'39"	43.75

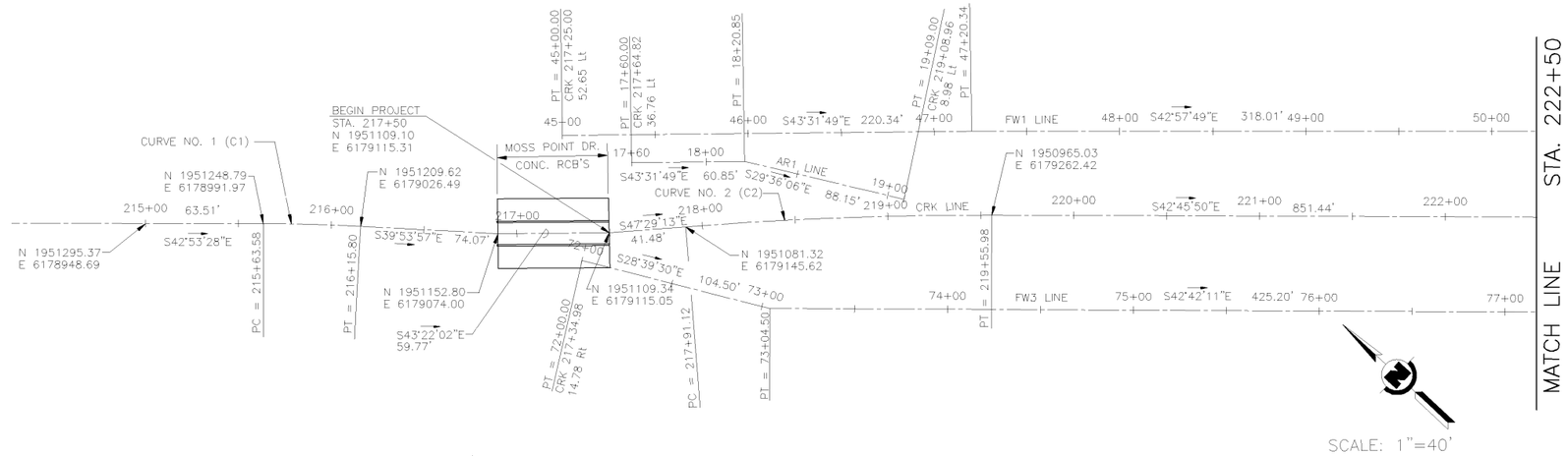

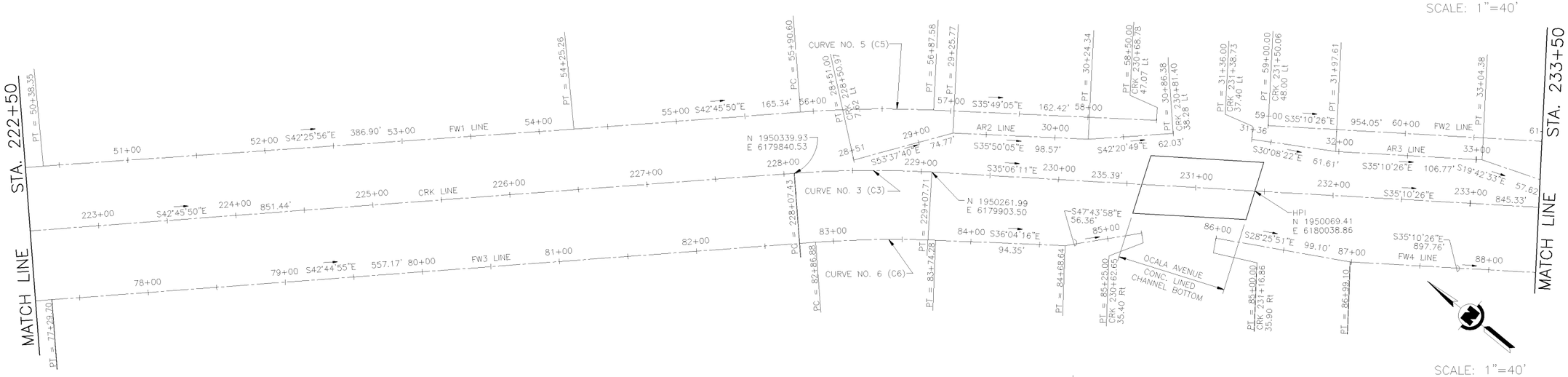

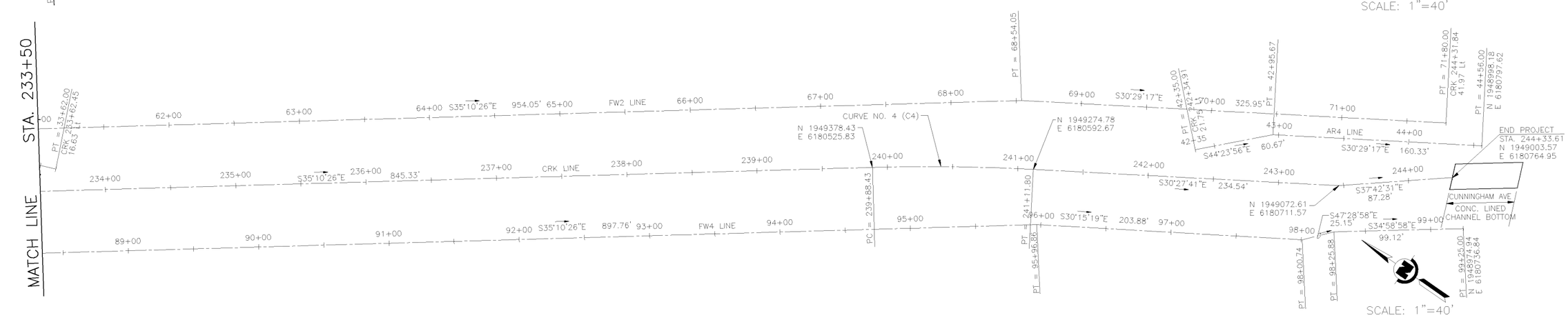

REV	DESCRIPTION	DATE	APPR	REFERENCE INFORMATION AND NOTES

MARK THOMAS & COMPANY, INC.
1960 ZANKER ROAD
SAN JOSE, CA 95112

DATE	DESIGN	DRAWN	CHECKED
03/26/10	BP	AB	AZ

REGISTERED PROFESSIONAL ENGINEER
JIMMY W. SIMS
No. 35458
Exp. 09/30/11
CIVIL
STATE OF CALIFORNIA

Santa Clara Valley Water District

ACCEPTED BY DISTRICT

PROJECT MANAGER DATE

PROJECT NAME AND SHEET DESCRIPTION:

FINAL DESIGN FOR LOWER SILVER CREEK REACH 6B–MOSS POINT DRIVE TO CUNNINGHAM AVENUE CHANNEL CONSTRUCTION CONTROL LINE LAYOUT & GEOMETRY

SCALE: AS SHOWN

PROJECT NUMBER: 40264008

VERIFY SCALES: 0 1"
BAR IS ONE INCH ON ORIGINAL DRAWING. IF NOT ONE INCH ON THIS SHEET, ADJUST SCALES ACCORDINGLY

SHEET CODE: C–4

PAGE NUMBER: 12 OF 53

DOCUMENT NUMBER: LOS-CY-C-4026-41826
USERNAME: abarajas Mar 25, 2010-02:55:58pm
FILENAME:C4 - CL Layout & Geom.dwg

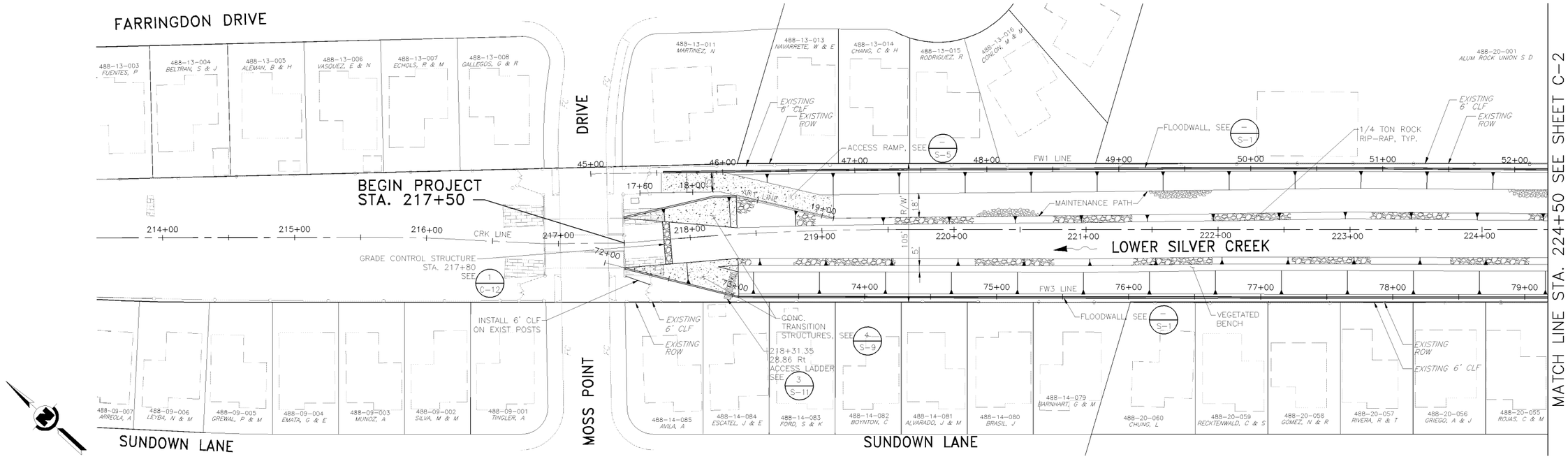

PLAN

SCALE: 1"=40'

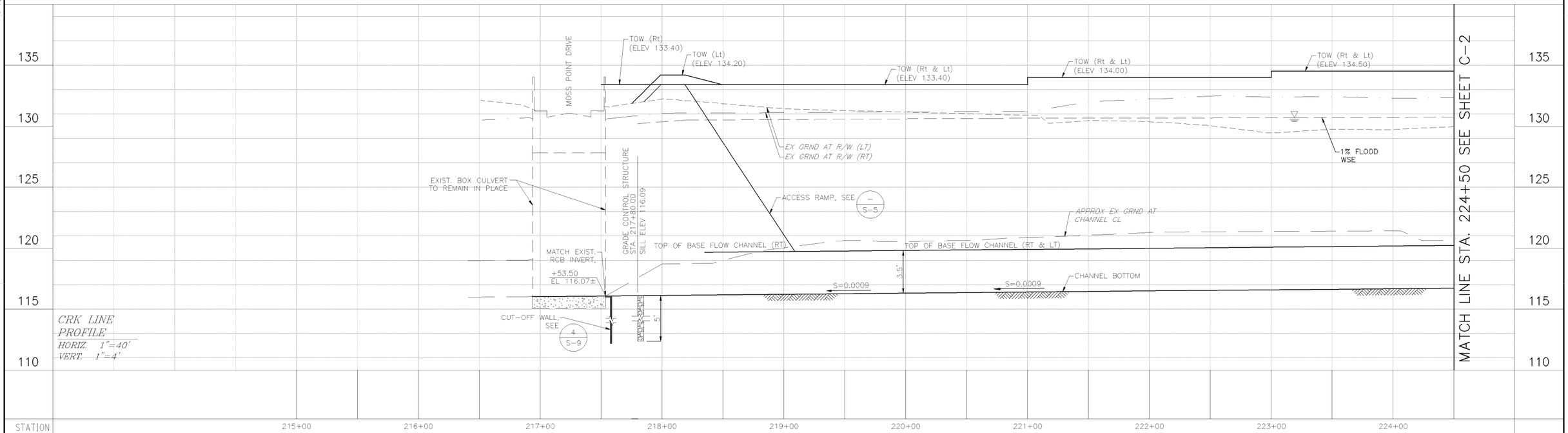

REV	DESCRIPTION	DATE	APPR	REFERENCE INFORMATION AND NOTES

MARK THOMAS & COMPANY, INC.
1960 ZANKER ROAD
SAN JOSE, CA 95112

DATE 03/26/10
DESIGN BP
DRAWN AB
CHECKED AZ

REGISTERED PROFESSIONAL ENGINEER
JIMMY W. SIMS
No. 35458
Exp. 09/30/11
CIVIL
STATE OF CALIFORNIA

Santa Clara Valley Water District

ACCEPTED BY DISTRICT

PROJECT MANAGER DATE

PROJECT NAME AND SHEET DESCRIPTION:

FINAL DESIGN FOR LOWER SILVER CREEK REACH 6B–MOSS POINT DRIVE TO CUNNINGHAM AVENUE FINISH GRADING PLAN STA. 213+50 TO STA. 224+50

SCALE: SCALE: 1"=40'

VERIFY SCALES 0 1"
BAR IS ONE INCH ON ORIGINAL DRAWING. IF NOT ONE INCH ON THIS SHEET, ADJUST SCALES ACCORDINGLY.

PROJECT NUMBER 40264008

SHEET CODE: C–5

PAGE NUMBER: 13 OF 53

USERNAME: abarajas Mar 25, 2010–03:58:19pm
FILENAME:C5-C7 – Final Grading Plan & Prof.dwg

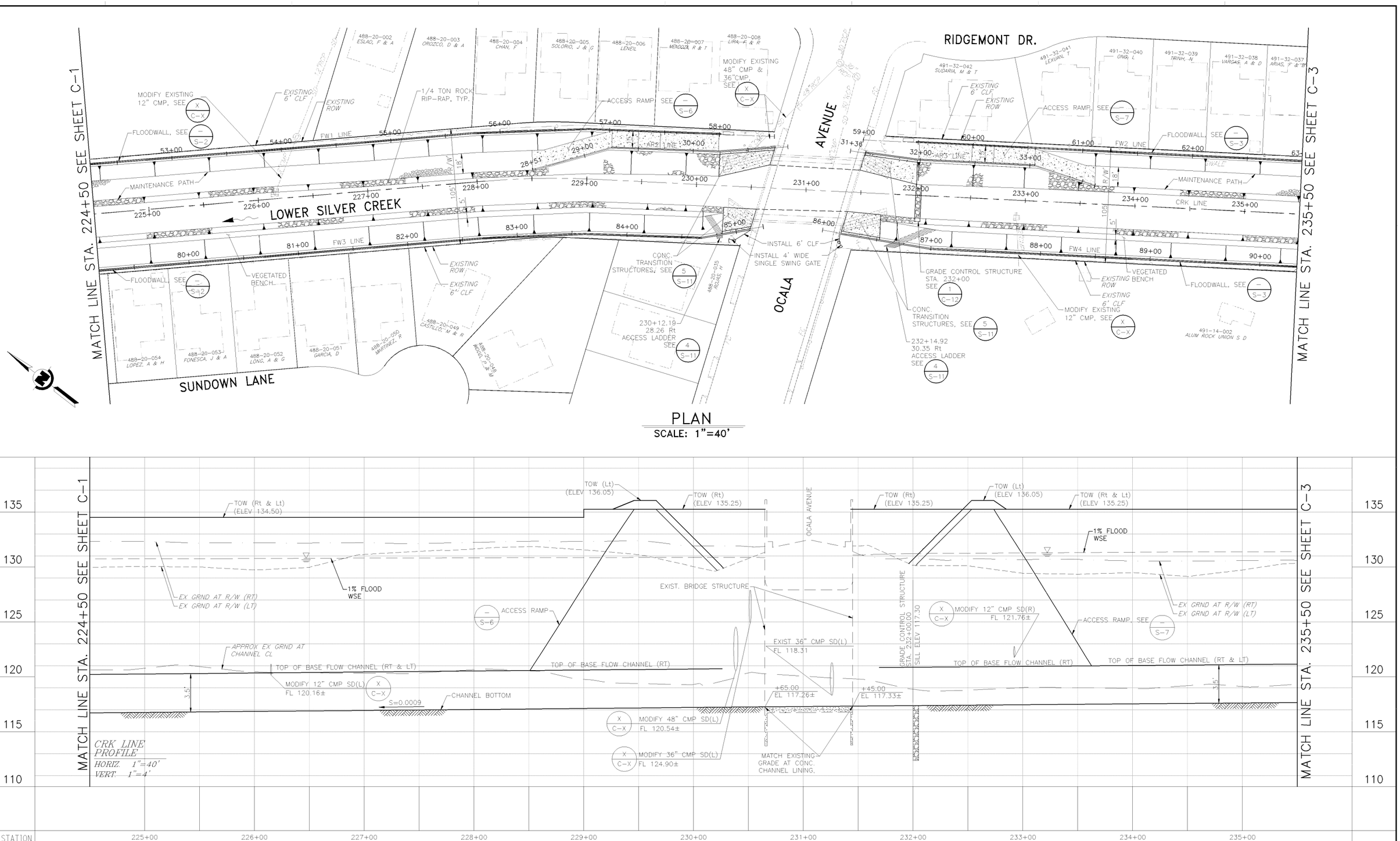

REV	DESCRIPTION	DATE	APPR	REFERENCE INFORMATION AND NOTES

MARK THOMAS & COMPANY, INC.
1960 ZANKER ROAD
SAN JOSE, CA 95112

DATE 03/26/10
DESIGN BP
DRAWN AB
CHECKED AZ

REGISTERED PROFESSIONAL ENGINEER
JIMMY W. SIMS
No. 35458
Exp. 09/30/11
CIVIL
STATE OF CALIFORNIA

Santa Clara Valley Water District

ACCEPTED BY DISTRICT

PROJECT MANAGER DATE

PROJECT NAME AND SHEET DESCRIPTION:

FINAL DESIGN FOR LOWER SILVER CREEK REACH 6B-MOSS POINT DRIVE TO CUNNINGHAM AVENUE FINISH GRADING PLAN STA. 224+50 TO STA. 235+50

SCALE: SCALE: 1"=40'

VERIFY SCALES 0 1"
BAR IS ONE INCH ON ORIGINAL DRAWING. IF NOT ONE INCH ON THIS SHEET, ADJUST SCALES ACCORDINGLY.

PROJECT NUMBER 40264008

SHEET CODE: C-6

PAGE NUMBER: 14 OF 53

USERNAME: abarajas Mar 25, 2010-03:58:29pm
FILENAME:C5-C7 - Final Grading Plan & Prof.dwg

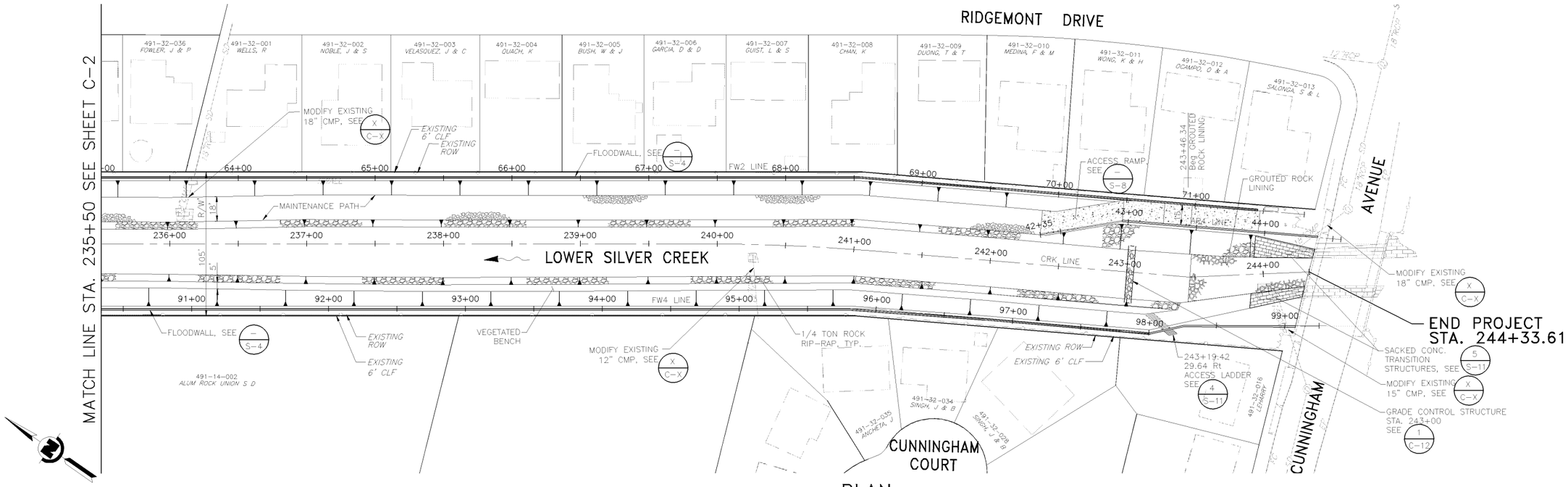

PLAN
SCALE: 1"=40'

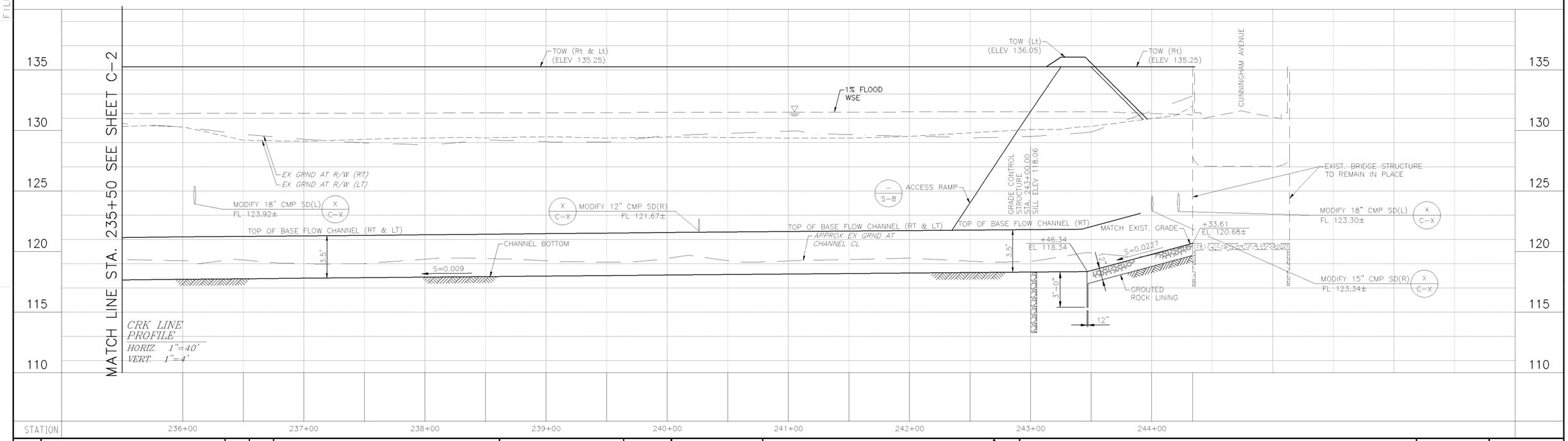

REV	DESCRIPTION	DATE	APPR

REFERENCE INFORMATION AND NOTES

MARK THOMAS & COMPANY, INC.
1960 ZANKER ROAD
SAN JOSE, CA 95112

DATE 03/26/10
DESIGN BP
DRAWN AB
CHECKED AZ

REGISTERED PROFESSIONAL ENGINEER
JIMMY W. SIMS
No. 35458
Exp. 09/30/11
CIVIL
STATE OF CALIFORNIA

Santa Clara Valley Water District

ACCEPTED BY DISTRICT

PROJECT MANAGER DATE

PROJECT NAME AND SHEET DESCRIPTION:
FINAL DESIGN FOR LOWER SILVER CREEK
REACH 6B-MOSS POINT DRIVE TO
CUNNINGHAM AVENUE
FINISH GRADING PLAN
STA. 235+50 TO STA. 244+33.61

SCALE
SCALE: 1"=40'

PROJECT NUMBER
40264008

VERIFY SCALES
0 1"
BAR IS ONE INCH ON ORIGINAL DRAWING IF NOT ONE INCH ON THIS SHEET, ADJUST SCALES ACCORDINGLY

SHEET CODE:
C-7

PAGE NUMBER:
15 OF 53

USERNAME: abarajas Mar 25, 2010-03:58:38pm
FILENAME:C5-C7 - Final Grading Plan & Prof.dwg

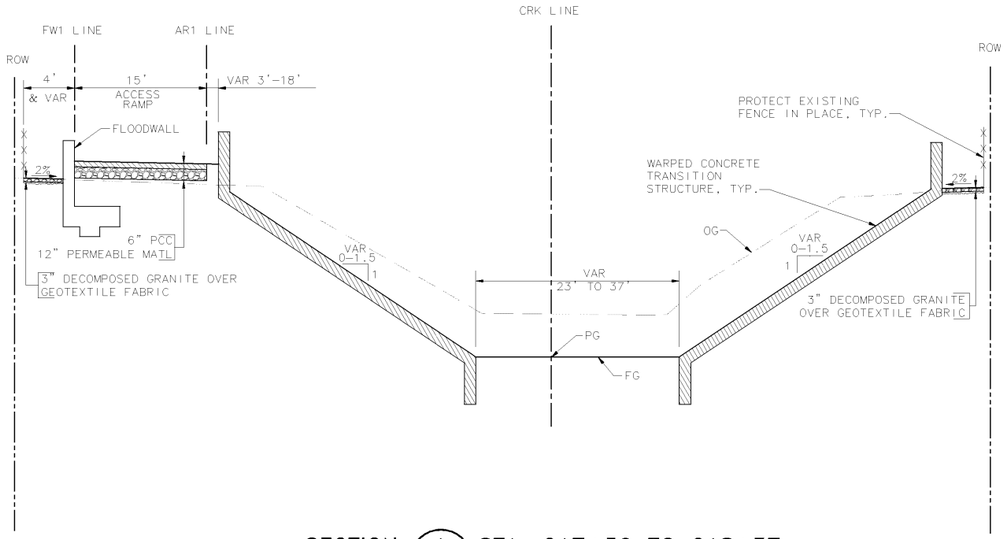

SECTION (A) STA. 217+50 TO 218+37

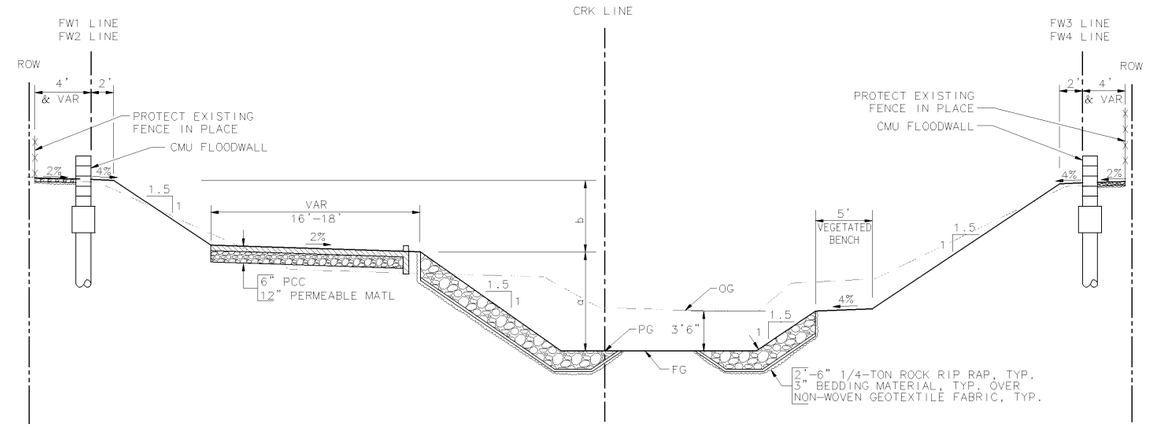

SECTION (B)

STA. 218+37 TO 219+09	a	b
STA. 228+51 TO 229+21	15.5'	10.8'
STA. 233+07 TO 233+63	14.6'	10.1'
STA. 242+35 TO 242+94	13.5'	

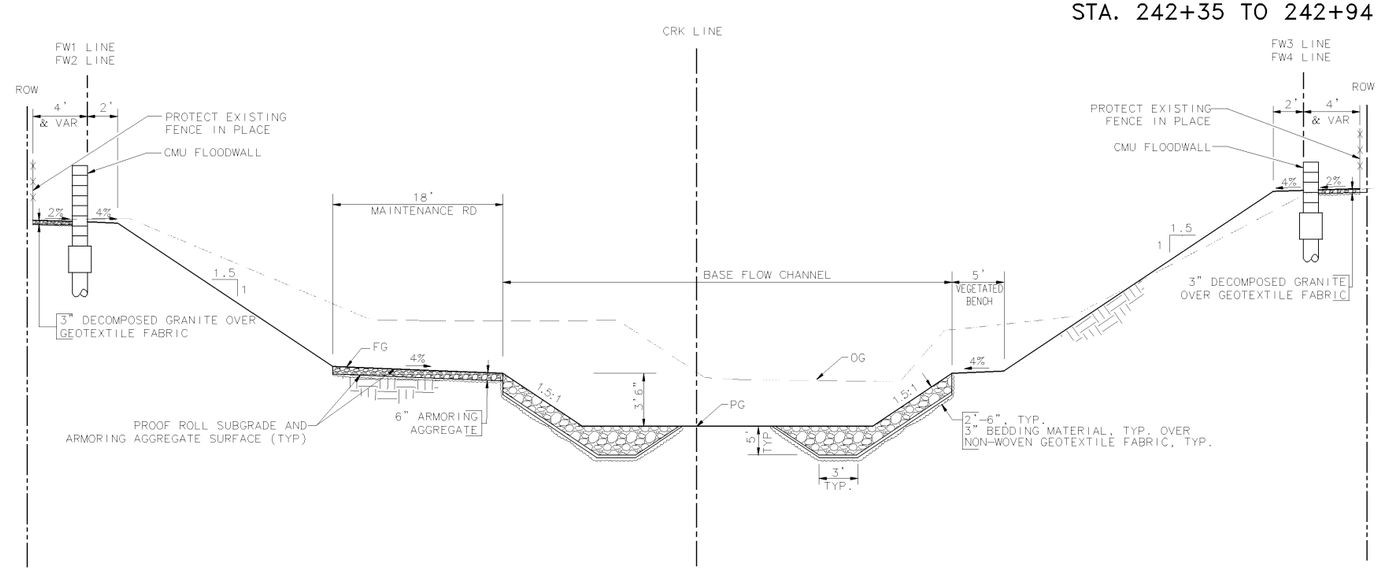

SECTION (C)

STA. 219+09 TO 228+51
STA. 233+63 TO 242+35

REV	DESCRIPTION	DATE	APPR

REFERENCE INFORMATION AND NOTES

1. WSE REPRESENTS THE PREVAILING WATER LEVEL DURING CONSTRUCTION.
2. ALL EXPOSED AREAS DISTURBED DURING CONSTRUCTION SHALL BE HYDROSEEDED.
3. GRADE EXISTING GROUND UNIFORMLY BEFORE PLACING EROSION CONTROL BLANKET.

MARK THOMAS & COMPANY, INC.
1960 ZANKER ROAD
SAN JOSE, CA 95112

DATE 03/26/10
DESIGN BP
DRAWN AB
CHECKED AZ

REGISTERED PROFESSIONAL ENGINEER
JIMMY W. SIMS
No. 35458
Exp. 09/30/11
CIVIL
STATE OF CALIFORNIA

Santa Clara Valley Water District

ACCEPTED BY DISTRICT

PROJECT MANAGER DATE

PROJECT NAME AND SHEET DESCRIPTION:

FINAL DESIGN FOR LOWER SILVER CREEK
REACH 6B-MOSS POINT DRIVE TO
CUNNINGHAM AVENUE
TYPICAL CROSS SECTIONS
STA. 218+00 TO STA. 244+33.61

SCALE: NOT TO SCALE

VERIFY SCALES 0 1"
BAR IS ONE INCH ON ORIGINAL DRAWING. IF NOT ONE INCH ON THIS SHEET, ADJUST SCALES ACCORDINGLY.

PROJECT NUMBER: 40264008

SHEET CODE: C-8

PAGE NUMBER: 16 OF 53

USERNAME: abarajas Mar 25, 2010-02:56:58pm
FILENAME:C8-C9 - Typ X-sections.dwg
DOCUMENT NUMBER: LOS-CY-C-4026-41831

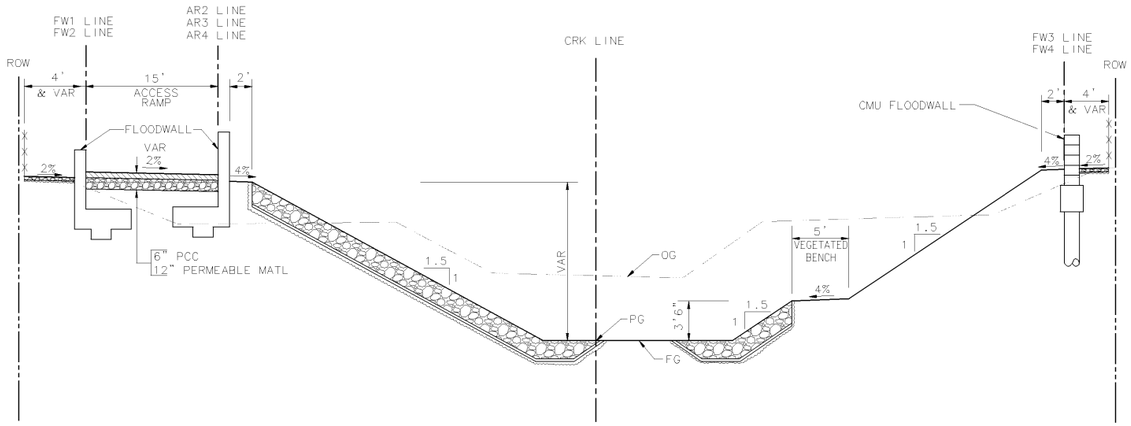

SECTION (D) STA. 229+21 TO 230+20
STA. 232+00 TO 233+07
STA. 242+94 TO 243+96

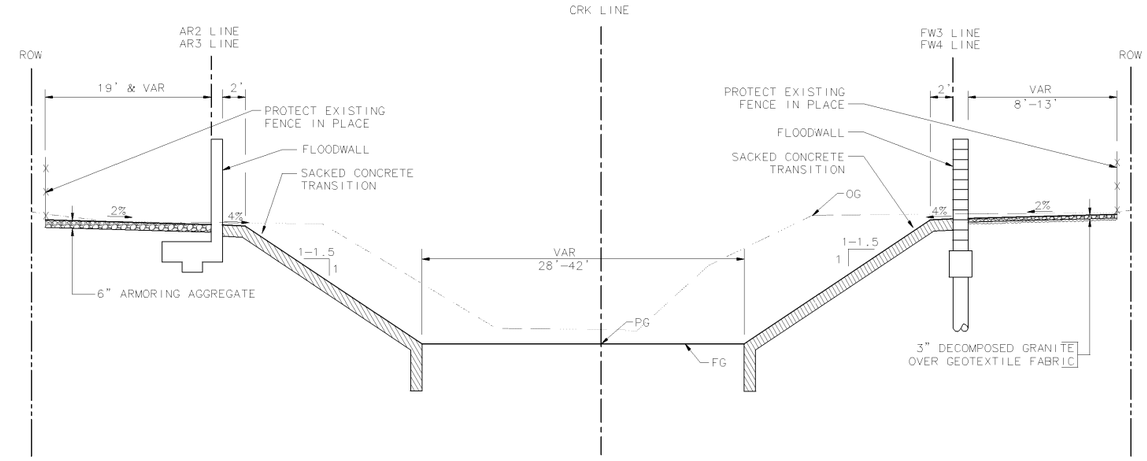

SECTION (E) STA. 230+20 TO 230+70
STA. 231+35 TO 232+00

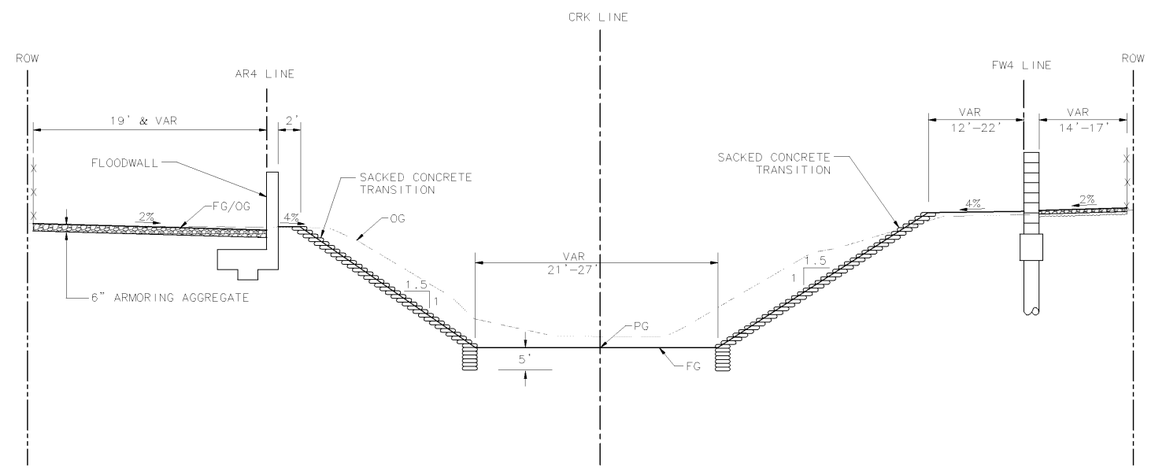

SECTION (F) STA. 243+96 TO 244+33.61

REV	DESCRIPTION	DATE	APPR

REFERENCE INFORMATION AND NOTES

1. WSE REPRESENTS THE PREVAILING WATER LEVEL DURING CONSTRUCTION.
2. ALL EXPOSED AREAS DISTURBED DURING CONSTRUCTION SHALL BE HYDROSEEDED.
3. GRADE EXISTING GROUND UNIFORMLY BEFORE PLACING EROSION CONTROL BLANKET.

MARK THOMAS & COMPANY, INC.
1960 ZANKER ROAD
SAN JOSE, CA 95112

DATE 03/26/10
DESIGN BP
DRAWN AB
CHECKED AZ

REGISTERED PROFESSIONAL ENGINEER
JIMMY W. SIMS
No. 35458
Exp. 09/30/11
CIVIL
STATE OF CALIFORNIA

Santa Clara Valley Water District

ACCEPTED BY DISTRICT

PROJECT MANAGER DATE

PROJECT NAME AND SHEET DESCRIPTION:
FINAL DESIGN FOR LOWER SILVER CREEK
REACH 6B-MOSS POINT DRIVE TO
CUNNINGHAM AVENUE
TYPICAL CROSS SECTIONS
STA. 218+00 TO STA. 244+33.61

SCALE NOT TO SCALE
VERIFY SCALES 0 1"
BAR IS ONE INCH ON ORIGINAL DRAWING IF NOT ONE INCH ON THIS SHEET, ADJUST SCALES ACCORDINGLY

PROJECT NUMBER 40264008
SHEET CODE: C-9
PAGE NUMBER: 17 OF 53

USERNAME: abarajas Mar 25, 2010-02:57:00pm
FILENAME:C8-C9 - Typ X-sections.dwg
DOCUMENT NUMBER: LOS-CY-C-4026-41831

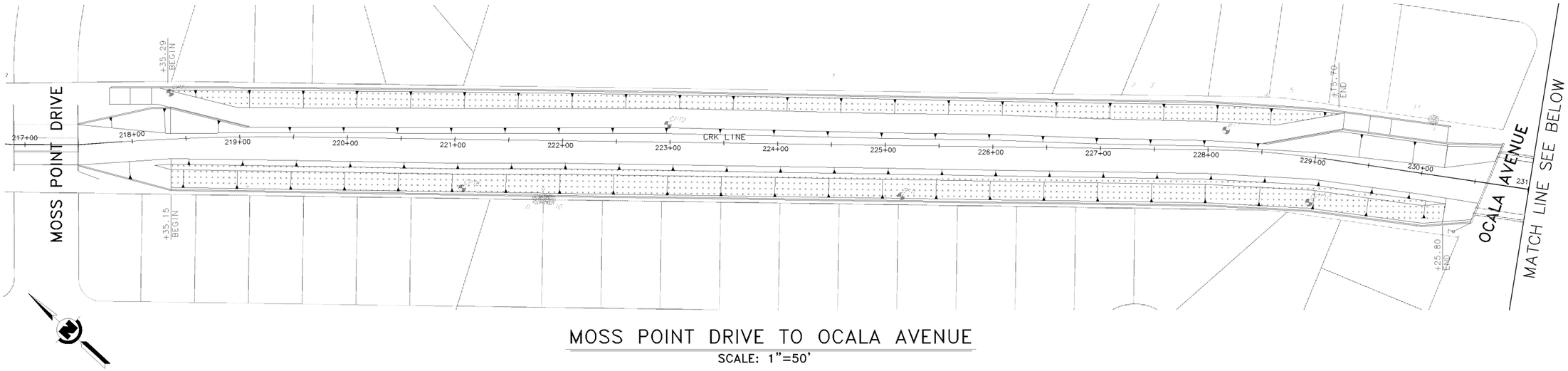

MOSS POINT DRIVE TO OCALA AVENUE

SCALE: 1"=50'

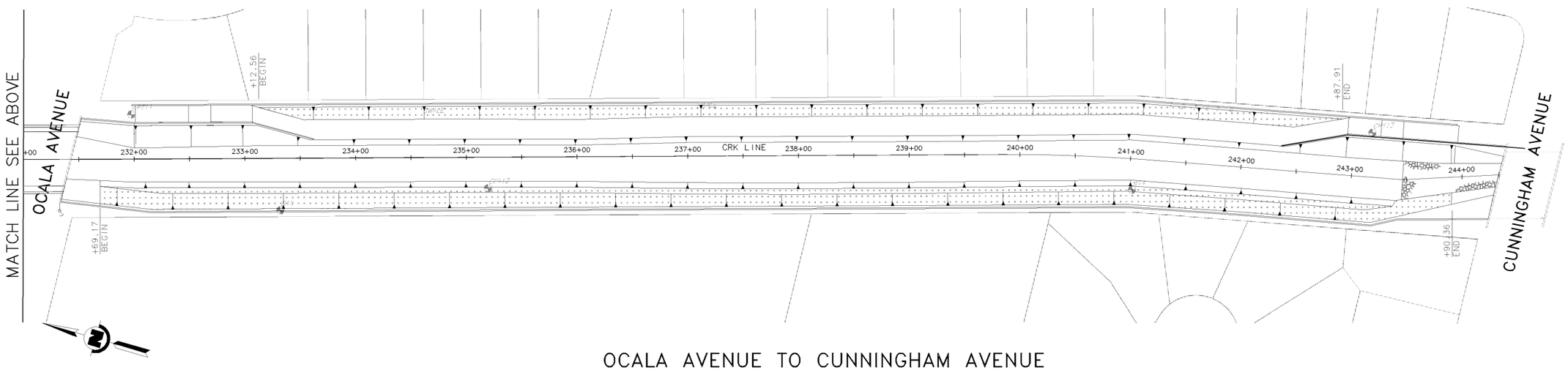

OCALA AVENUE TO CUNNINGHAM AVENUE

SCALE: 1"=50'

REV	DESCRIPTION	DATE	APPR	REFERENCE INFORMATION AND NOTES

MARK THOMAS & COMPANY, INC.
1960 ZANKER ROAD
SAN JOSE, CA 95112

DATE 03/26/10
DESIGN BP
DRAWN AB
CHECKED AZ

REGISTERED PROFESSIONAL ENGINEER
JIMMY W. SIMS
No. 35458
Exp. 09/30/11
CIVIL
STATE OF CALIFORNIA

Santa Clara Valley Water District

ACCEPTED BY DISTRICT

PROJECT MANAGER DATE

PROJECT NAME AND SHEET DESCRIPTION:

FINAL DESIGN FOR LOWER SILVER CREEK
REACH 6B–MOSS POINT DRIVE TO
CUNNINGHAM AVENUE

EROSION CONTROL LIMITS

SCALE: NOT TO SCALE

VERIFY SCALES: 0 — 1"
BAR IS ONE INCH ON ORIGINAL DRAWING. IF NOT ONE INCH ON THIS SHEET, ADJUST SCALES ACCORDINGLY

PROJECT NUMBER: 40264008

SHEET CODE: C–10

PAGE NUMBER: 18 OF 53

USERNAME: abarajas Mar 25, 2010–02:57:18pm
FILENAME:C10–C11 – Misc Details.dwg
DOCUMENT NUMBER: LOS–CY–C–4026–41834

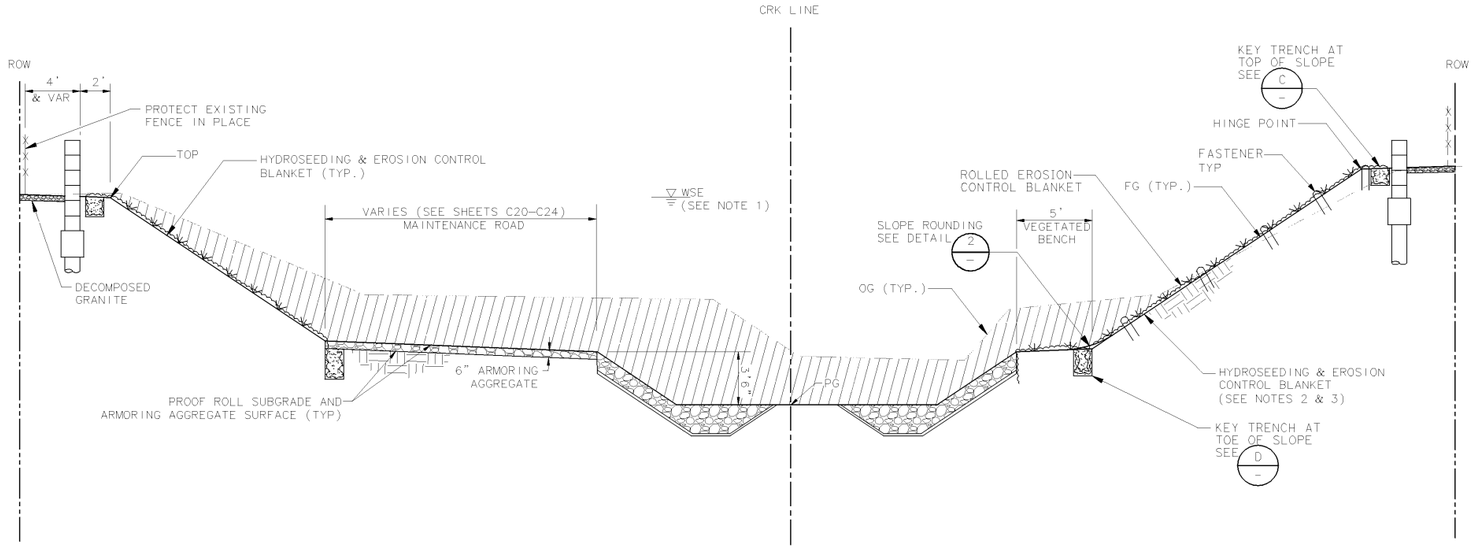

SECTION A TYPICAL EROSION CONTROL APPLICATION

CHANNEL EXCAVATION LIMITS

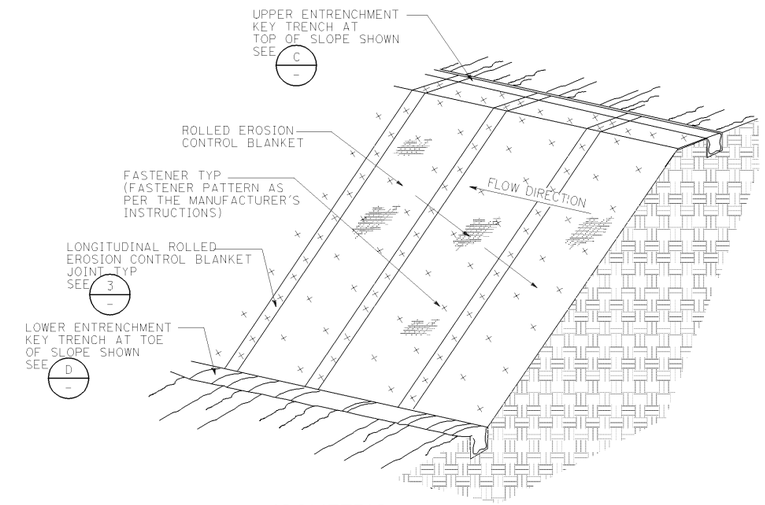

ISOMETRIC

DETAIL 1 ROLLED EROSION CONTROL BLANKET ON SLOPE

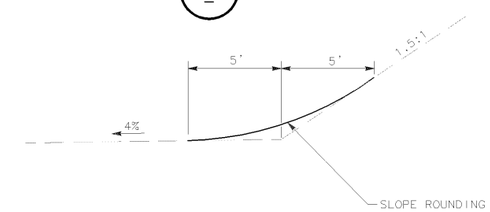

DETAIL 2 SLOPE ROUNDING

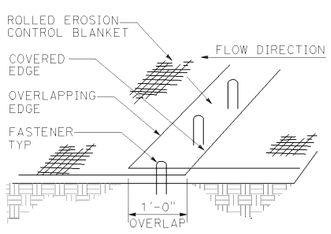

PERSPECTIVE

DETAIL 3 LONGITUDINAL ROLLED EROSION CONTROL BLANKET

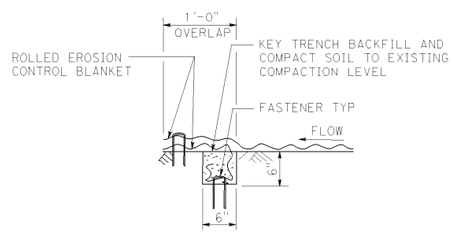

SECTION B TRANSVERSE ROLLED EROSION CONTROL BLANKET JOINT

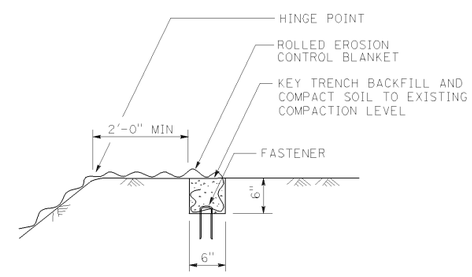

SECTION C KEY TRENCH AT TOP OF SLOPE

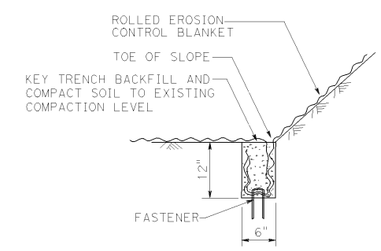

SECTION D KEY TRENCH AT TOE OF SLOPE

REV	DESCRIPTION	DATE	APPR

REFERENCE INFORMATION AND NOTES

1. WSE REPRESENTS THE PREVAILING WATER LEVEL DURING CONSTRUCTION.
2. ALL EXPOSED AREAS DISTURBED DURING CONSTRUCTION SHALL BE HYDROSEEDED.
3. GRADE EXISTING GROUND UNIFORMLY BEFORE PLACING EROSION CONTROL BLANKET.

MARK THOMAS & COMPANY, INC.
1960 ZANKER ROAD
SAN JOSE, CA 95112

DATE 03/26/10
DESIGN BP
DRAWN AB
CHECKED AZ

REGISTERED PROFESSIONAL ENGINEER
JIMMY W. SIMS
No. 35458
Exp. 09/30/11
CIVIL
STATE OF CALIFORNIA

Santa Clara Valley Water District

ACCEPTED BY DISTRICT

PROJECT MANAGER DATE

PROJECT NAME AND SHEET DESCRIPTION:
FINAL DESIGN FOR LOWER SILVER CREEK REACH 6B–MOSS POINT DRIVE TO CUNNINGHAM AVENUE
TYPICAL EROSION CONTROL APPLICATION

SCALE NOT TO SCALE
VERIFY SCALES 0 1"
BAR IS ONE INCH ON ORIGINAL DRAWING. IF NOT ONE INCH ON THIS SHEET, ADJUST SCALES ACCORDINGLY.

PROJECT NUMBER 40264008
SHEET CODE: C–11
PAGE NUMBER: 19 OF 53

USERNAME: abarajas Mar 25, 2010–02:57:26pm
FILENAME:C10–C11 – Misc Details.dwg
DOCUMENT NUMBER: LOS–CY–C–4026–41832

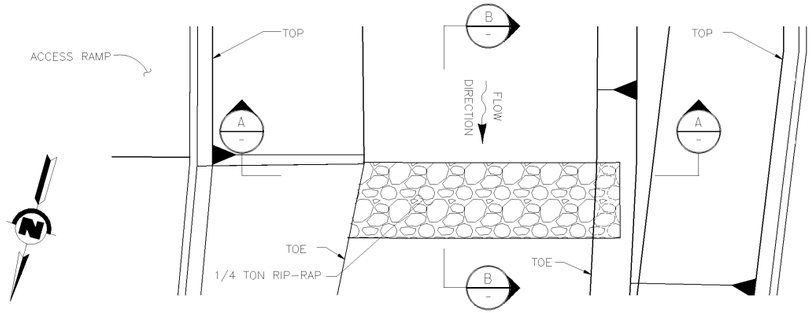

PLAN 1 GRADE CONTROL STRUCTURE
SCALE: 1"=10'

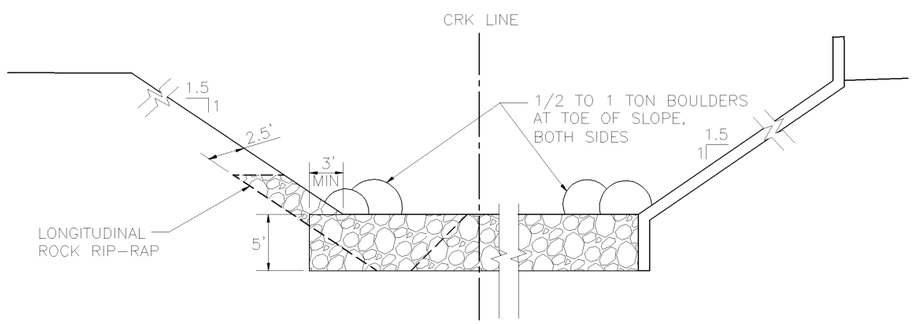

SECTION A GRADE CONTROL STRUCTURE
SCALE: NTS

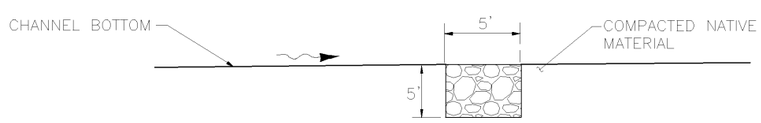

SECTION B GRADE CONTROL STRUCTURE
SCALE: NTS

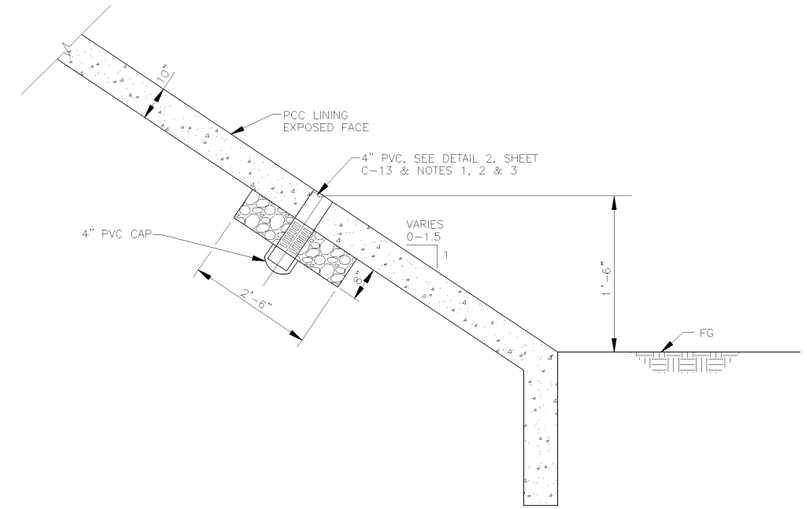

DETAIL 1 CONCRETE CHANNEL LINING WEEP HOLE
NTS

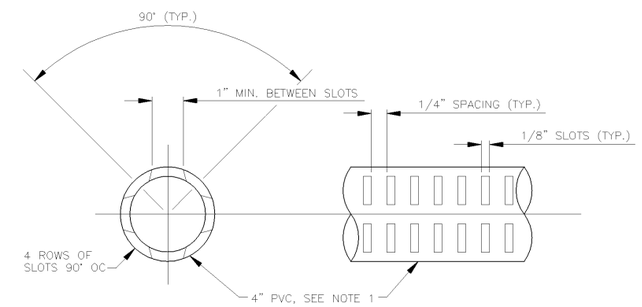

NOTES:
1. WEEP HOLES SHALL BE 4" POLYVINYL CHLORIDE (PVC) DRAIN PIPE.
2. SPACE WEEP HOLES LONGITUDINALLY AT 8' O.C. WITH A 1FT. THICK BLANKET OR PERMEABLE MATERIAL BENEATH CONCRETE CHANNEL LINING SIDE SLOPE.
3. CUT PVC FLUSH WITH FACE OF CONCRETE CHANNEL.

DETAIL 2 POLYVINYL CHLORIDE (PVC) DRAIN PIPE WEEP HOLES
NTS

REV	DESCRIPTION	DATE	APPR	REFERENCE INFORMATION AND NOTES

MARK THOMAS & COMPANY, INC.
1960 ZANKER ROAD
SAN JOSE, CA 95112

DATE 03/26/10
DESIGN BP
DRAWN AB
CHECKED AZ

REGISTERED PROFESSIONAL ENGINEER
JIMMY W. SIMS
No. 35458
Exp. 09/30/11
CIVIL
STATE OF CALIFORNIA

Santa Clara Valley Water District
ACCEPTED BY DISTRICT
PROJECT MANAGER DATE

PROJECT NAME AND SHEET DESCRIPTION:
FINAL DESIGN FOR LOWER SILVER CREEK
REACH 6B-MOSS POINT DRIVE TO
CUNNINGHAM AVENUE
MISCELLANEOUS DETAILS

SCALE AS SHOWN
VERIFY SCALES 0 1"
BAR IS ONE INCH ON ORIGINAL DRAWING IF NOT ONE INCH ON THIS SHEET, ADJUST SCALES ACCORDINGLY

PROJECT NUMBER 40264008
SHEET CODE: C-12
PAGE NUMBER: 20 OF 53

USERNAME: abarajas Mar 25, 2010-02:58:09pm
FILENAME:C12 - Grade Control Struct Detail.dwg
DOCUMENT NUMBER: LOS-CY-CD-4026-41835

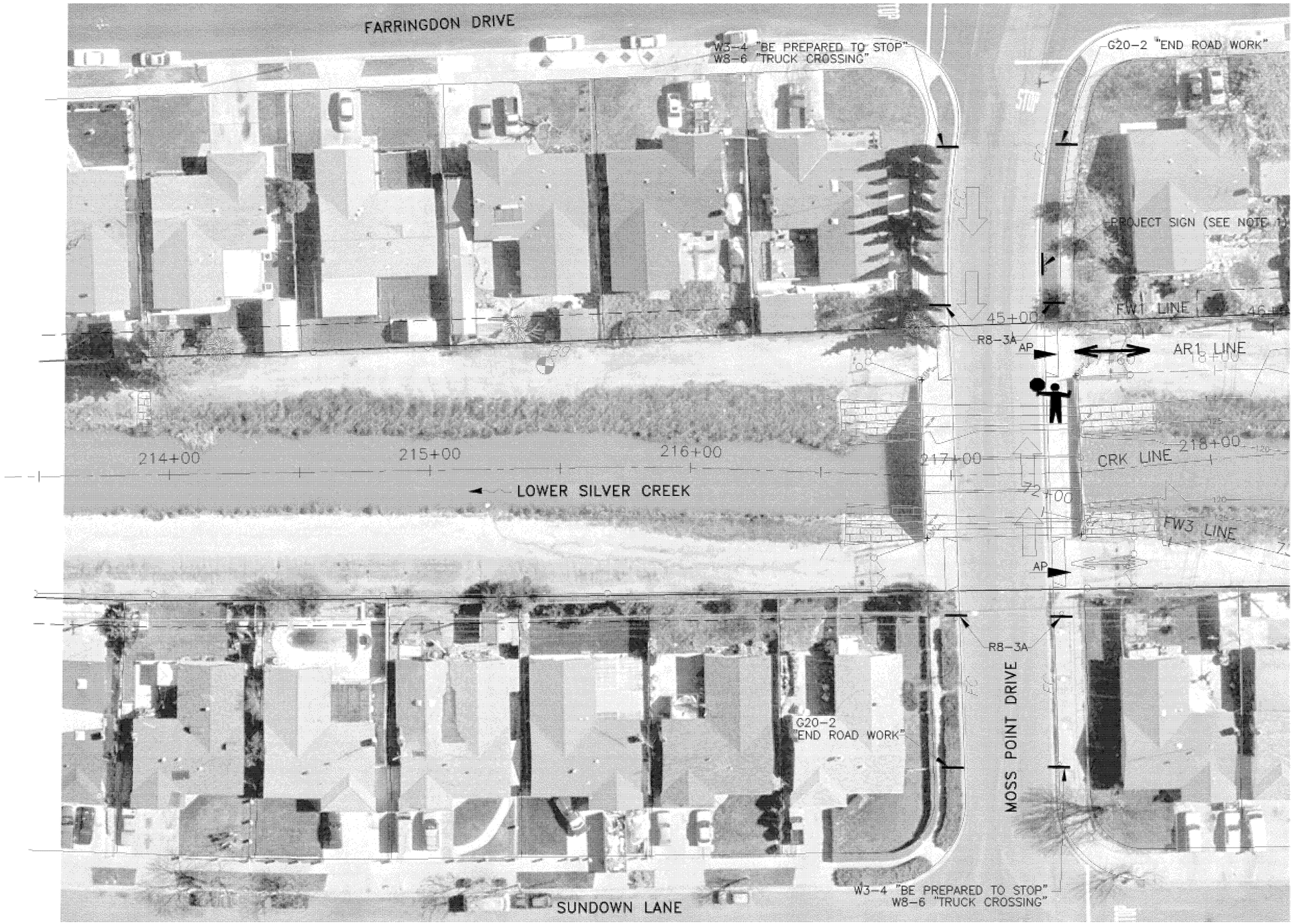

PLAN

SCALE: 1"=20'

GENERAL NOTES:

1. ALL TRAFFIC CONTROL DEVICES SUCH AS CONSTRUCTION SIGNS, BARRICADES, LIGHTS AND DELINEATORS SHALL BE FABRICATED IN ACCORDANCE WITH THE STATE OF CALIFORNIA DEPT. OF TRANSPORTATION MUTCD 2003 AND THE MUTCD 2003 CALIFORNIA SUPPLEMENT. ALL CONE SPACING AND TAPER SPACING AND SIGN SPACING SHALL BE IN ACCORDANCE WITH THE MUTCD 2003 CALIFORNIA SUPPLEMENT.
2. MOUNT SPECIAL SIGNS ON TYPE II BARRICADE.
3. MAINTAIN 12' MIN TRAFFIC LANES UNLESS OTHERWISE SPECIFIED.
4. KEEP DRIVEWAYS OPEN AT ALL TIMES UNLESS OTHERWISE SPECIFIED.
5. TRAINED FLAGGERS SHOULD BE PROVIDED.

TRAFFIC CONTROL LEGEND

CONSTRUCTION INGRESS / EGRESS

ALTERNATE INGRESS / EGRESS

CONSTRUCTION SIGN

TRAFFIC DIRECTION

FLAGGER

END ROAD WORK — G20-2

BE PREPARED TO STOP — W3-4

R8-3A

TRUCK CROSSING — W8-6

REV	DESCRIPTION	DATE	APPR

REFERENCE INFORMATION AND NOTES

1. APPROXIMATE LOCATION OF PROJECT SIGN INSTALLATION. THE CONTRACTOR SHALL COORDINATE WITH THE ENGINEER TO DETERMINE THE EXACT LOCATION AND ORIENTATION OF THE PROJECT SIGN.

MARK THOMAS & COMPANY, INC.
1960 ZANKER ROAD
SAN JOSE, CA 95112

DATE 03/26/10
DESIGN BP
DRAWN AB
CHECKED AZ

REGISTERED PROFESSIONAL ENGINEER
JIMMY W. SIMS
No. 35458
Exp. 09/30/11
CIVIL
STATE OF CALIFORNIA

Santa Clara Valley Water District

ACCEPTED BY DISTRICT

PROJECT MANAGER DATE

PROJECT NAME AND SHEET DESCRIPTION:
FINAL DESIGN FOR LOWER SILVER CREEK
REACH 6B-MOSS POINT DRIVE TO
CUNNINGHAM AVENUE
TRAFFIC CONTROL PLAN
MOSS POINT DRIVE

SCALE: AS SHOWN

VERIFY SCALES 0 1"
BAR IS ONE INCH ON ORIGINAL DRAWING. IF NOT ONE INCH ON THIS SHEET, ADJUST SCALES ACCORDINGLY

PROJECT NUMBER: 40264008

SHEET CODE: C-13

PAGE NUMBER: 21 OF 53

USERNAME: abarajas Mar 25, 2010-02:59:27pm
FILENAME:C13-C15 - Traffic Control.dwg
DOCUMENT NUMBER: LOS-CY-T-4026-41841

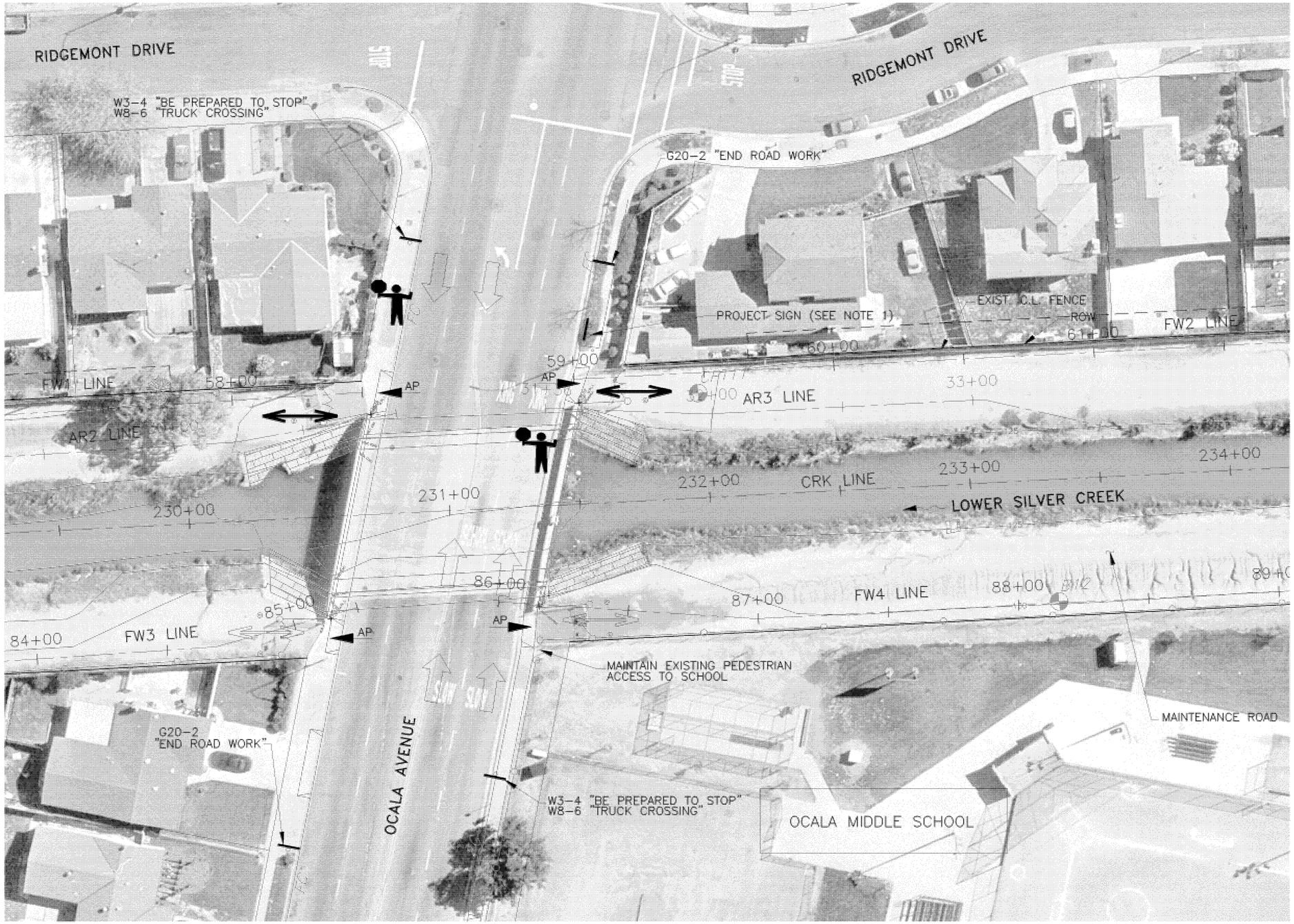

PLAN

SCALE: 1"=20'

GENERAL NOTES:

1. ALL TRAFFIC CONTROL DEVICES SUCH AS CONSTRUCTION SIGNS, BARRICADES, LIGHTS AND DELINEATORS SHALL BE FABRICATED IN ACCORDANCE WITH THE STATE OF CALIFORNIA DEPT. OF TRANSPORTATION MUTCD 2003 AND THE MUTCD 2003 CALIFORNIA SUPPLEMENT. ALL CONE SPACING AND TAPER SPACING AND SIGN SPACING SHALL BE IN ACCORDANCE WITH THE MUTCD 2003 CALIFORNIA SUPPLEMENT.
2. MOUNT SPECIAL SIGNS ON TYPE II BARRICADE.
3. MAINTAIN 12' MIN TRAFFIC LANES UNLESS OTHERWISE SPECIFIED.
4. KEEP DRIVEWAYS OPEN AT ALL TIMES UNLESS OTHERWISE SPECIFIED.
5. TRAINED FLAGGERS SHOULD BE PROVIDED.

TRAFFIC CONTROL LEGEND

- CONSTRUCTION INGRESS / EGRESS
- ALTERNATE INGRESS / EGRESS
- CONSTRUCTION SIGN
- TRAFFIC DIRECTION
- FLAGGER

END ROAD WORK — G20-2

BE PREPARED TO STOP — W3-4

R8-3A

TRUCK CROSSING — W8-6

REV	DESCRIPTION	DATE	APPR

REFERENCE INFORMATION AND NOTES

1. APPROXIMATE LOCATION OF PROJECT SIGN INSTALLATION. THE CONTRACTOR SHALL COORDINATE WITH THE ENGINEER TO DETERMINE THE EXACT LOCATION AND ORIENTATION OF THE PROJECT SIGN.

MARK THOMAS & COMPANY, INC.
1960 ZANKER ROAD
SAN JOSE, CA 95112

DATE 03/26/10
DESIGN BP
DRAWN AB
CHECKED AZ

REGISTERED PROFESSIONAL ENGINEER
JIMMY W. SIMS
No. 35458
Exp. 09/30/11
CIVIL
STATE OF CALIFORNIA

Santa Clara Valley Water District

ACCEPTED BY DISTRICT

PROJECT MANAGER DATE

PROJECT NAME AND SHEET DESCRIPTION:
FINAL DESIGN FOR LOWER SILVER CREEK
REACH 6B-MOSS POINT DRIVE TO
CUNNINGHAM AVENUE
TRAFFIC CONTROL PLAN
OCALA AVENUE

SCALE: AS SHOWN

VERIFY SCALES: 0 — 1"
BAR IS ONE INCH ON ORIGINAL DRAWING IF NOT ONE INCH ON THIS SHEET, ADJUST SCALES ACCORDINGLY

PROJECT NUMBER: 40264008

SHEET CODE: C-14

PAGE NUMBER: 22 OF 53

USERNAME: abarajas Mar 25, 2010-03:01:37pm
FILENAME:C13-C15 - Traffic Control.dwg
DOCUMENT NUMBER: LOS-CY-T-4026-41841

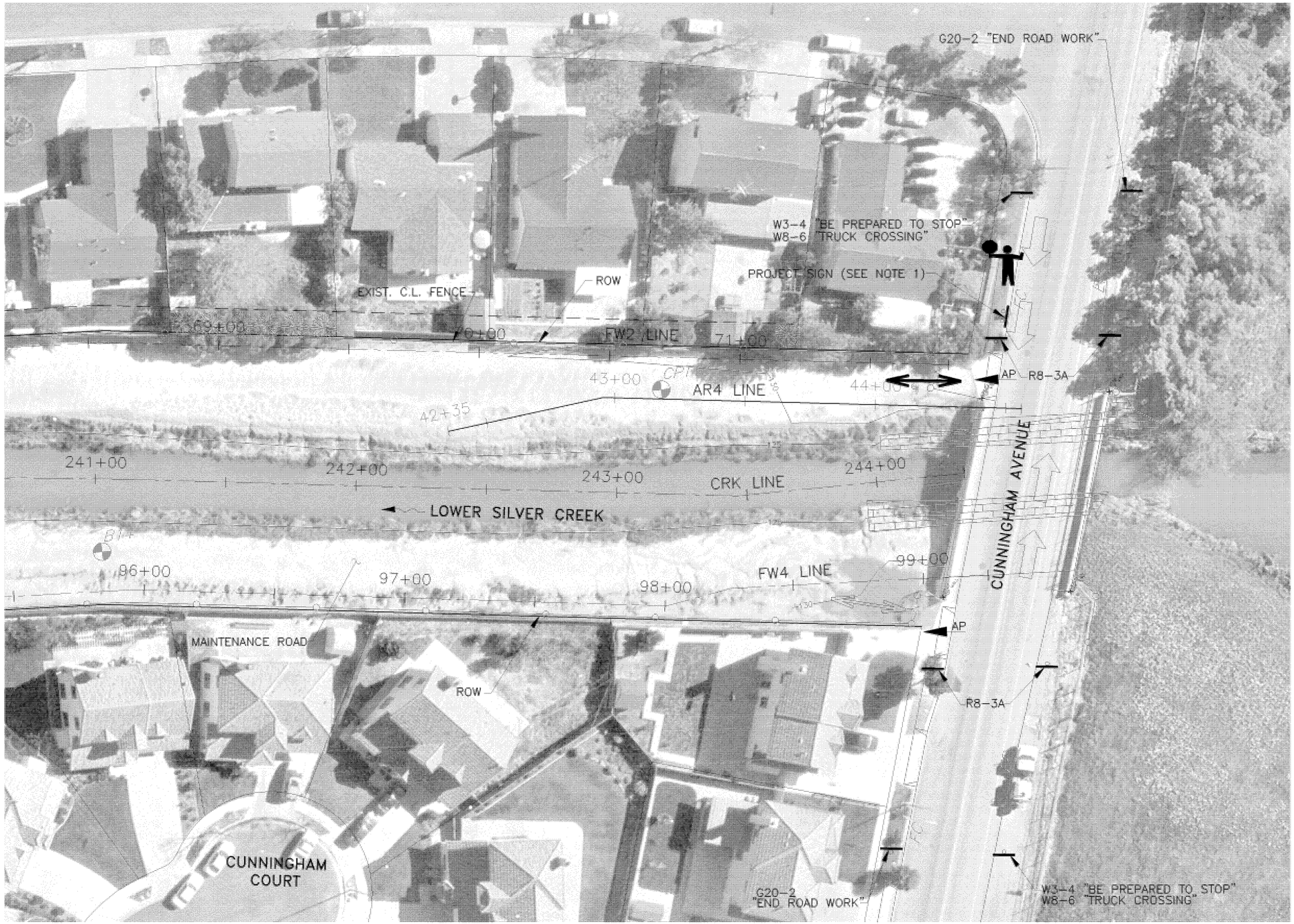

PLAN

SCALE: 1"=20'

GENERAL NOTES:

1. ALL TRAFFIC CONTROL DEVICES SUCH AS CONSTRUCTION SIGNS, BARRICADES, LIGHTS AND DELINEATORS SHALL BE FABRICATED IN ACCORDANCE WITH THE STATE OF CALIFORNIA DEPT. OF TRANSPORTATION MUTCD 2003 AND THE MUTCD 2003 CALIFORNIA SUPPLEMENT. ALL CONE SPACING AND TAPER SPACING AND SIGN SPACING SHALL BE IN ACCORDANCE WITH THE MUTCD 2003 CALIFORNIA SUPPLEMENT.
2. MOUNT SPECIAL SIGNS ON TYPE II BARRICADE.
3. MAINTAIN 12' MIN TRAFFIC LANES UNLESS OTHERWISE SPECIFIED.
4. KEEP DRIVEWAYS OPEN AT ALL TIMES UNLESS OTHERWISE SPECIFIED.
5. TRAINED FLAGGERS SHOULD BE PROVIDED.

TRAFFIC CONTROL LEGEND

CONSTRUCTION INGRESS / EGRESS

ALTERNATE INGRESS / EGRESS

CONSTRUCTION SIGN

TRAFFIC DIRECTION

FLAGGER

END ROAD WORK — G20-2

BE PREPARED TO STOP — W3-4

R8-3A

TRUCK CROSSING — W8-6

REV	DESCRIPTION	DATE	APPR

REFERENCE INFORMATION AND NOTES

1. APPROXIMATE LOCATION OF PROJECT SIGN INSTALLATION. THE CONTRACTOR SHALL COORDINATE WITH THE ENGINEER TO DETERMINE THE EXACT LOCATION AND ORIENTATION OF THE PROJECT SIGN.

MARK THOMAS & COMPANY, INC.
1960 ZANKER ROAD
SAN JOSE, CA 95112

DATE 03/26/10
DESIGN BP
DRAWN AB
CHECKED AZ

REGISTERED PROFESSIONAL ENGINEER
JIMMY W. SIMS
No. 35458
Exp. 09/30/11
CIVIL
STATE OF CALIFORNIA

Santa Clara Valley Water District

ACCEPTED BY DISTRICT

PROJECT MANAGER DATE

PROJECT NAME AND SHEET DESCRIPTION:

FINAL DESIGN FOR LOWER SILVER CREEK
REACH 6B-MOSS POINT DRIVE TO
CUNNINGHAM AVENUE
TRAFFIC CONTROL PLAN
CUNNINGHAM AVENUE

SCALE AS SHOWN

VERIFY SCALES 0 1"
BAR IS ONE INCH ON ORIGINAL DRAWING. IF NOT ONE INCH ON THIS SHEET, ADJUST SCALES ACCORDINGLY

PROJECT NUMBER 40264008

SHEET CODE: C-15

PAGE NUMBER: 23 OF 53

USERNAME: abarajas Mar 25, 2010-03:03:26pm
FILENAME:C13-C15 - Traffic Control.dwg
DOCUMENT NUMBER: LOS-CY-T-4026-41841

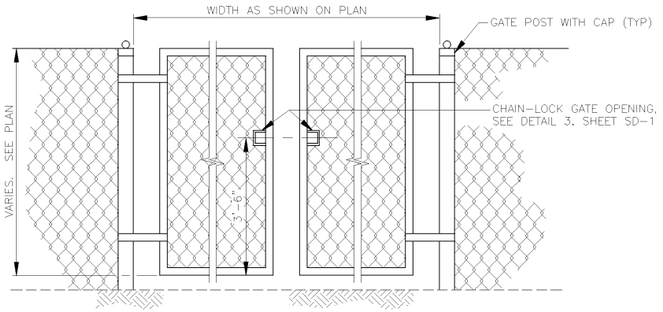

DETAIL 1 – DOUBLE SWING DOUBLE DRIVE GATE
NTS

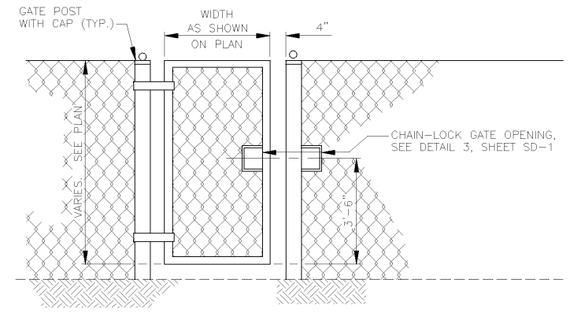

DETAIL 2 – SINGLE SWING GATE
NTS

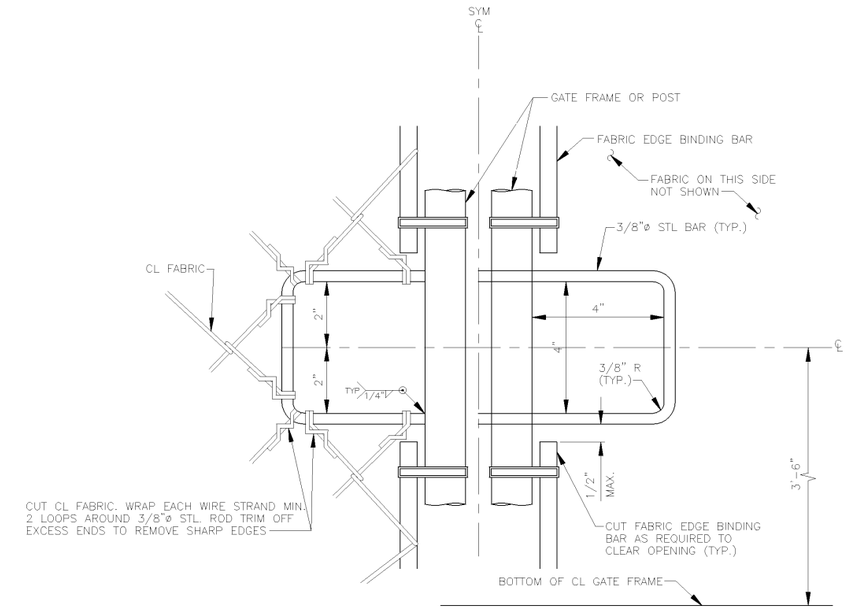

NOTE
CHAIN & LOCK SHALL BE FURNISHED & INSTALLED BY SCVWD

DETAIL 3 – CHAIN-LOCK GATE OPENING
NTS

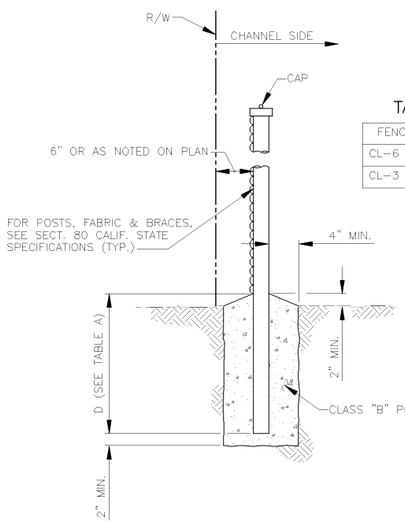

TABLE A

FENCE	D
CL-6	3'-0"
CL-3 1/2	2'-6"

DETAIL 4 – IN GROUND
NTS

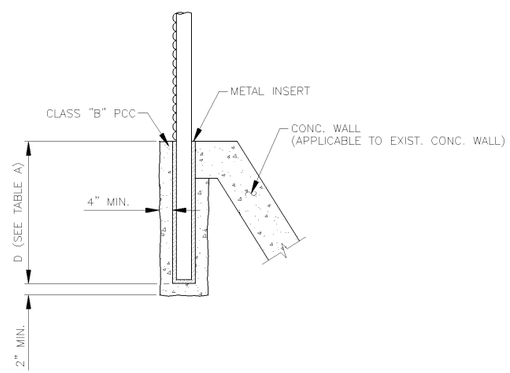

DETAIL 5 – ALONG VERTICAL CONC. WALL
NTS

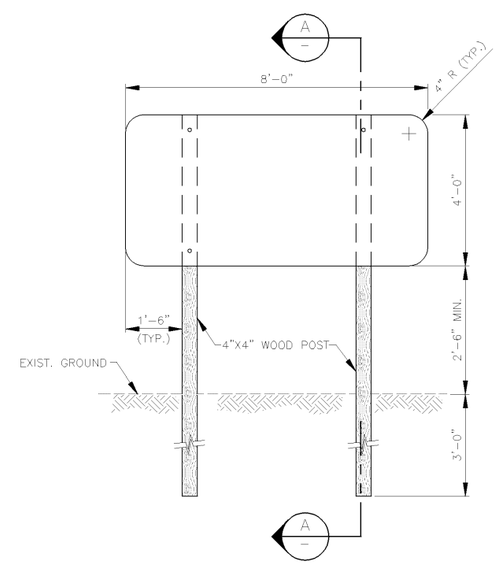

DETAIL 7 – PROJECT SIGN INSTALLATION
NTS

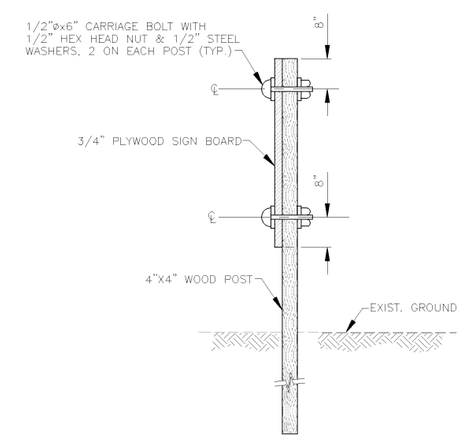

SECTION A – SIGN BOLTING
NTS

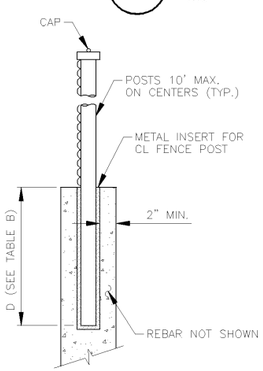

TABLE B

FENCE	D
CL-6	2'-0"
CL-5	1'-6"
CL-3 1/2	1'-0"

DETAIL 6 – IN CONCRETE WALL
NTS

REV	DESCRIPTION	DATE	APPR	REFERENCE INFORMATION AND NOTES

MARK THOMAS & COMPANY, INC.
1960 ZANKER ROAD
SAN JOSE, CA 95112

DATE 03/26/10
DESIGN BP
DRAWN AB
CHECKED AZ

REGISTERED PROFESSIONAL ENGINEER
JIMMY W. SIMS
No. 35458
Exp. 09/30/11
CIVIL
STATE OF CALIFORNIA

Santa Clara Valley Water District
ACCEPTED BY DISTRICT
PROJECT MANAGER DATE

PROJECT NAME AND SHEET DESCRIPTION:
FINAL DESIGN FOR LOWER SILVER CREEK
REACH 6B-MOSS POINT DRIVE TO
CUNNINGHAM AVENUE
SCVWD STANDARD DETAILS

SCALE: AS SHOWN
VERIFY SCALES 0 1"
BAR IS ONE INCH ON ORIGINAL DRAWING. IF NOT ONE INCH ON THIS SHEET, ADJUST SCALES ACCORDINGLY.

PROJECT NUMBER: 40264008
SHEET CODE: C-16
PAGE NUMBER: 24 OF 53

USERNAME: abarajas Mar 25, 2010-03:05:22pm
FILENAME:C16-C17 - SCVWD Details.dwg
DOCUMENT NUMBER: LOS-CY-SD-4026-41844

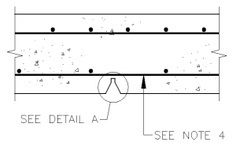

SECTION

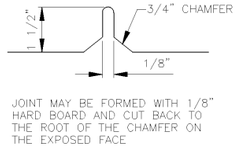

DETAIL A

DETAIL 1/– CONTRACTION OR WEAKENED PLANE JOINT
NTS

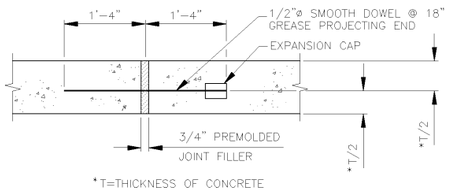

DETAIL 2/– EXPANSION JOINT
NTS

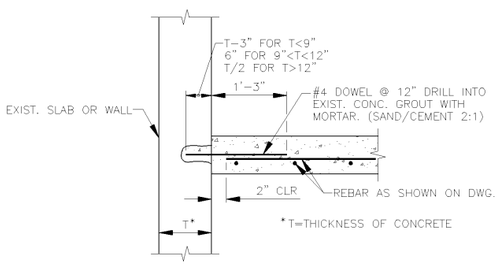

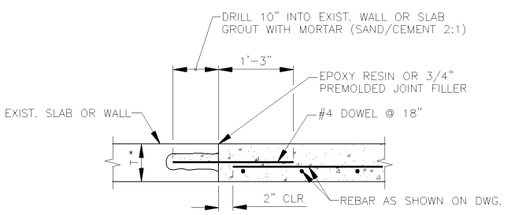

DETAIL 3/– CONSTRUCTION JOINT TO EXISTING CONCRETE
NTS

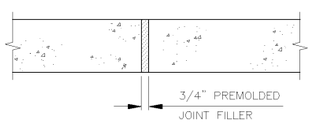

DETAIL 4/– SETTLEMENT JOINT
NTS

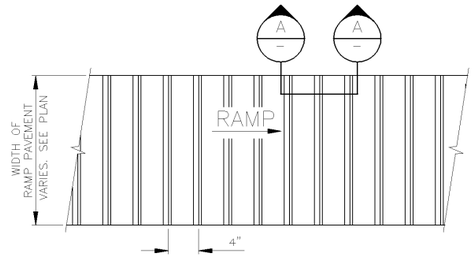

DETAIL 5/– PLAN – CONCRETE PAVEMENT GROOVING
NTS

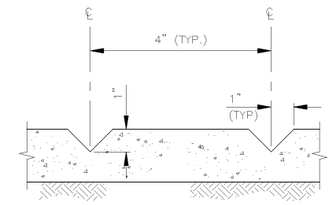

SECTION A/– GROOVING
NTS

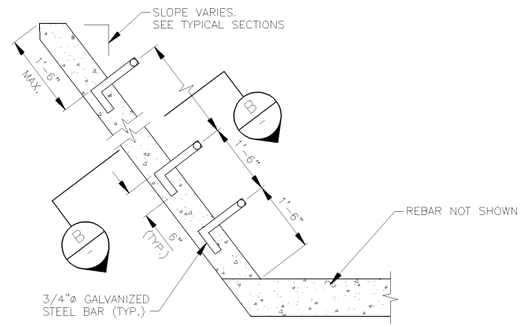

DETAIL 6/– LADDER
NTS

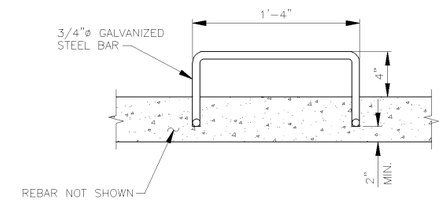

SECTION B/– LADDER RUNG
NTS

NOTES:

1. REFLECTIVE DEPTH MARKER SHALL BE INSTALLED AT THE STATIONS ON THE LEFT OR RIGHT BANK UPSTREAM AND DOWNSTREAM OF BRIDGE.
2. NUMBER IS TO REPRESENT VERTICAL DISTANCE IN FEET ABOVE CHANNEL INVERT IN ONE FOOT INCREMENTS.

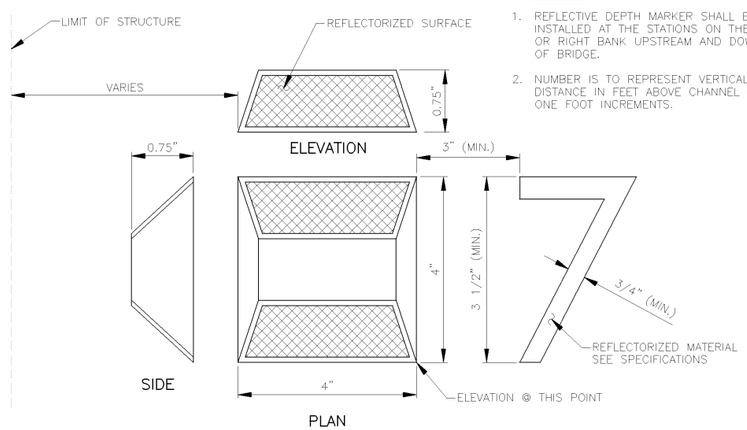

DETAIL 7/– REFLECTIVE DEPTH MARKER SEE NOTE 1
NTS

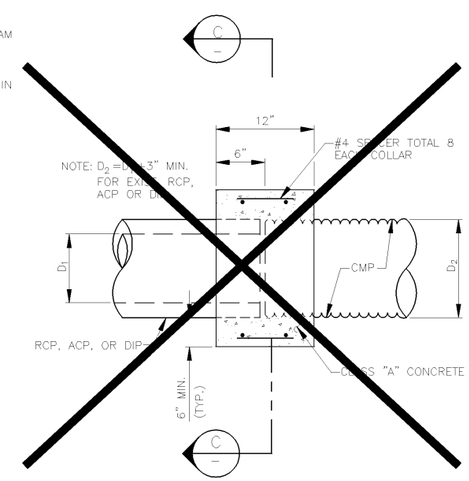

DETAIL 8/– CONCRETE COLLAR
NTS

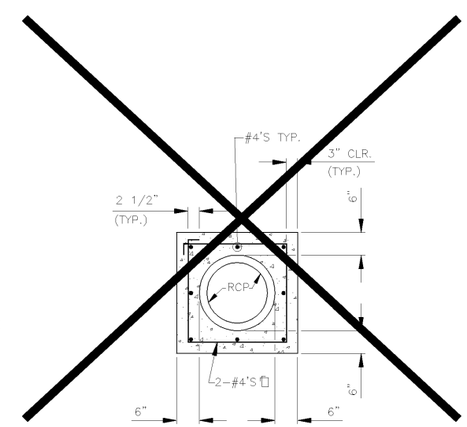

SECTION C/–
NTS

REV	DESCRIPTION	DATE	APPR	REFERENCE INFORMATION AND NOTES

MARK THOMAS & COMPANY, INC.
1960 ZANKER ROAD
SAN JOSE, CA 95112

DATE 03/26/10
DESIGN BP
DRAWN AB
CHECKED AZ

REGISTERED PROFESSIONAL ENGINEER
JIMMY W. SIMS
No. 35458
Exp. 09/30/11
CIVIL
STATE OF CALIFORNIA

Santa Clara Valley Water District
ACCEPTED BY DISTRICT
PROJECT MANAGER DATE

PROJECT NAME AND SHEET DESCRIPTION:
FINAL DESIGN FOR LOWER SILVER CREEK REACH 6B–MOSS POINT DRIVE TO CUNNINGHAM AVENUE
SCVWD STANDARD DETAILS

SCALE AS SHOWN
VERIFY SCALES 0 1"
BAR IS ONE INCH ON ORIGINAL DRAWING IF NOT ONE INCH ON THIS SHEET, ADJUST SCALES ACCORDINGLY

PROJECT NUMBER 40264008
SHEET CODE: C-17
PAGE NUMBER: 25 OF 53

USERNAME: abarajas Mar 25, 2010-03:05:23pm
FILENAME:C16-C17 – SCVWD Details.dwg
DOCUMENT NUMBER: LOS-CY-SD-4026-41844

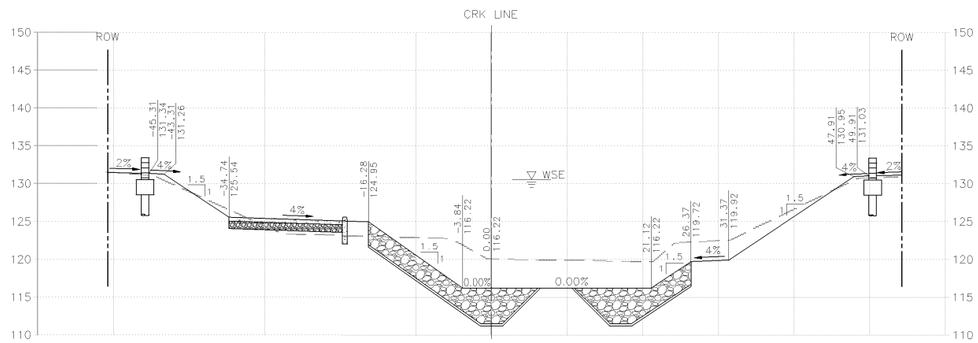

CROSS SECTION–STA. 219+00

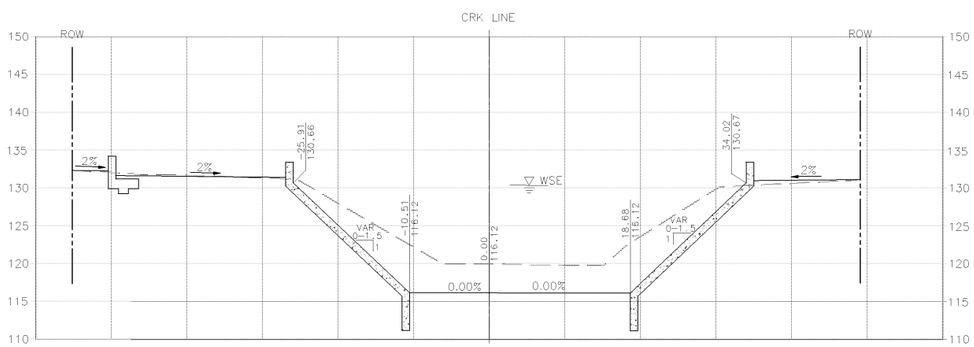

CROSS SECTION–STA. 218+00

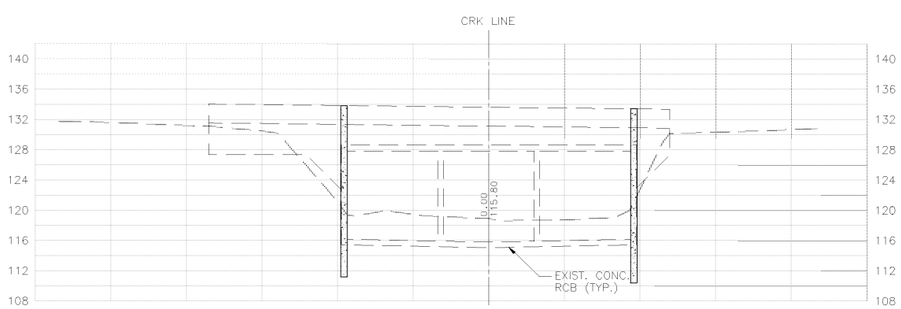

CROSS SECTION–STA. 217+50

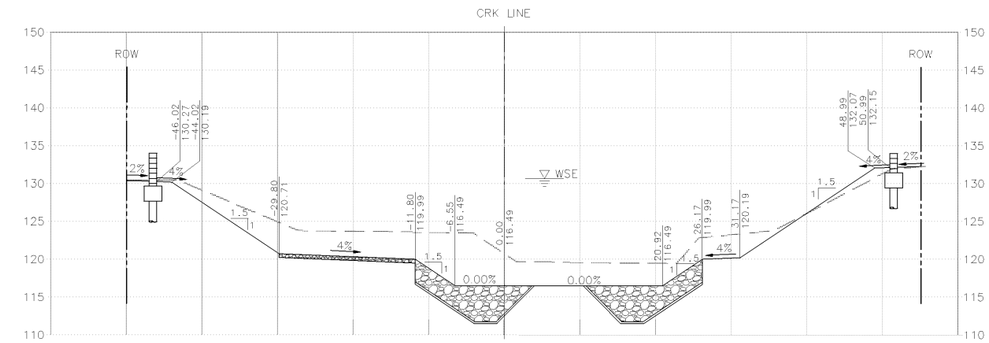

CROSS SECTION–STA. 222+00

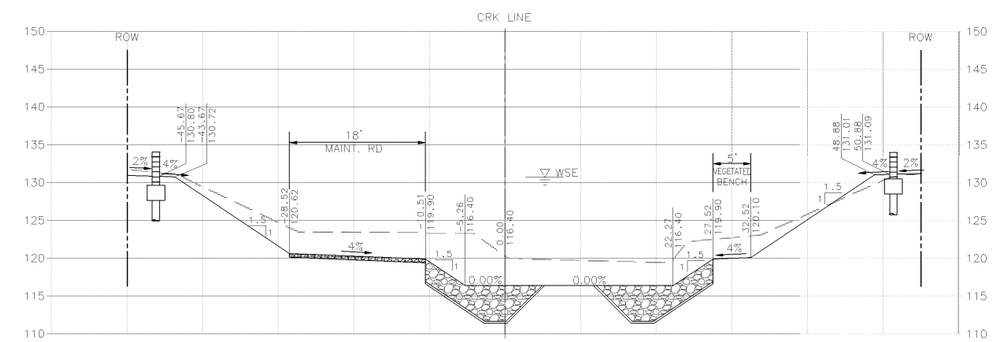

CROSS SECTION–STA. 221+00

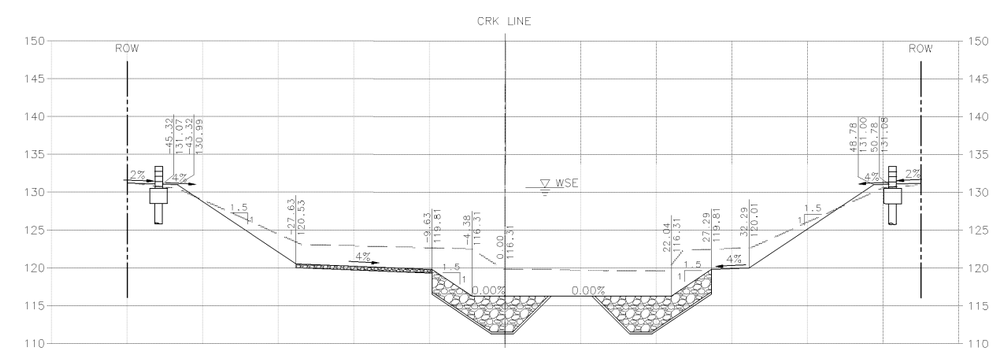

CROSS SECTION–STA. 220+00

REV	DESCRIPTION	DATE	APPR

REFERENCE INFORMATION AND NOTES

1. HORIZONTAL DIMENSIONS SHOWN ARE PERPENDICULAR TO CHANNEL BOTTOM (CONTROL).
2. FOR GEOMETRY AND LAYOUT OF CENTERLINE OF CHANNEL BOTTOM SEE SHT. C–5.
3. ALL STATIONING SHOWN ARE ALONG CRK LINE (NOT ALONG SURVEY P–LINE).
4. CROSS SECTIONS PROVIDED ARE FOR REFERENCE ONLY.

MARK THOMAS & COMPANY, INC.
1960 ZANKER ROAD
SAN JOSE, CA 95112

DATE 03/26/10
DESIGN BP
DRAWN AB
CHECKED AZ

REGISTERED PROFESSIONAL ENGINEER
JIMMY W. SIMS
No. 35458
Exp. 09/30/11
CIVIL
STATE OF CALIFORNIA

Santa Clara Valley Water District

ACCEPTED BY DISTRICT

PROJECT MANAGER DATE

PROJECT NAME AND SHEET DESCRIPTION:

FINAL DESIGN FOR LOWER SILVER CREEK
REACH 6B–MOSS POINT DRIVE TO
CUNNINGHAM AVENUE
CROSS SECTIONS
STA. 217+50 TO STA. 222+00

SCALE 1"=10'

VERIFY SCALES 0 1"
BAR IS ONE INCH ON ORIGINAL DRAWING. IF NOT ONE INCH ON THIS SHEET, ADJUST SCALES ACCORDINGLY

PROJECT NUMBER 40264008

SHEET CODE: C–18

PAGE NUMBER: 26 OF 53

USERNAME: abarajas Mar 25, 2010-03:05:39pm
FILENAME:C18-C22 – Cross Sections.dwg
DOCUMENT NUMBER: LOS-CY-XS-4026-41845

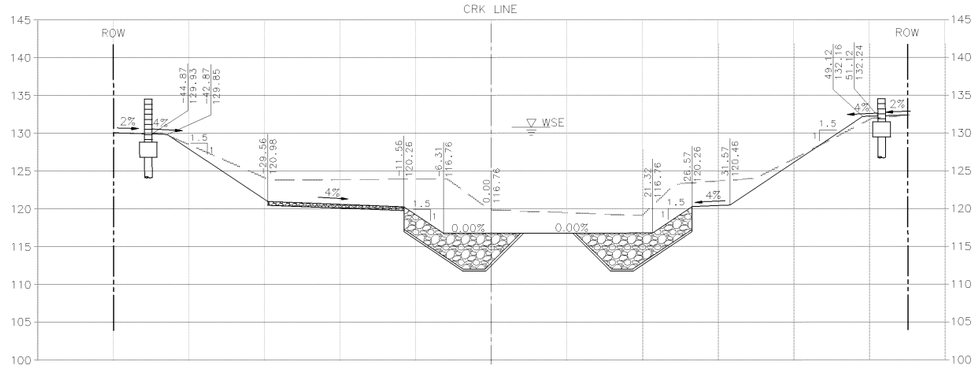

CROSS SECTION–STA. 225+00

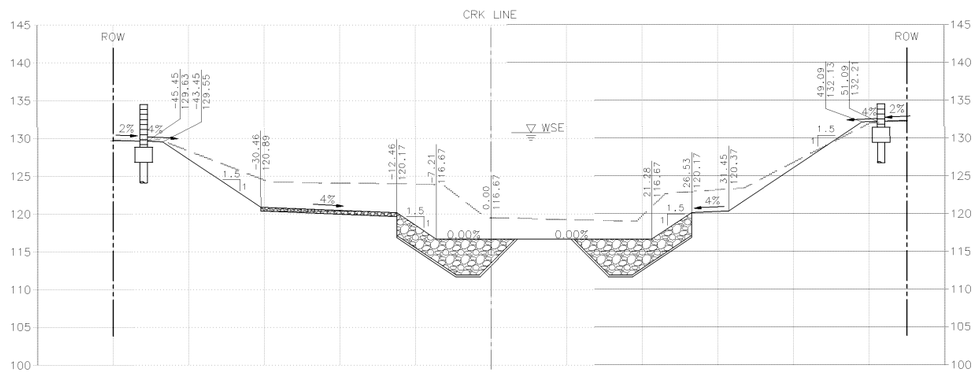

CROSS SECTION–STA. 224+00

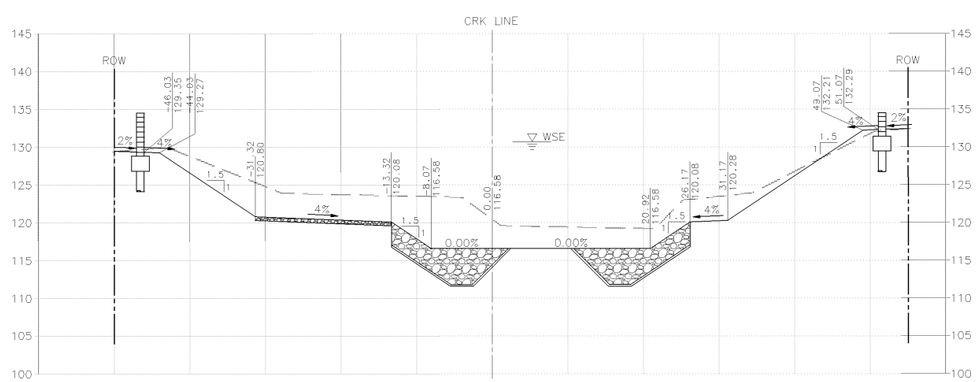

CROSS SECTION–STA. 223+00

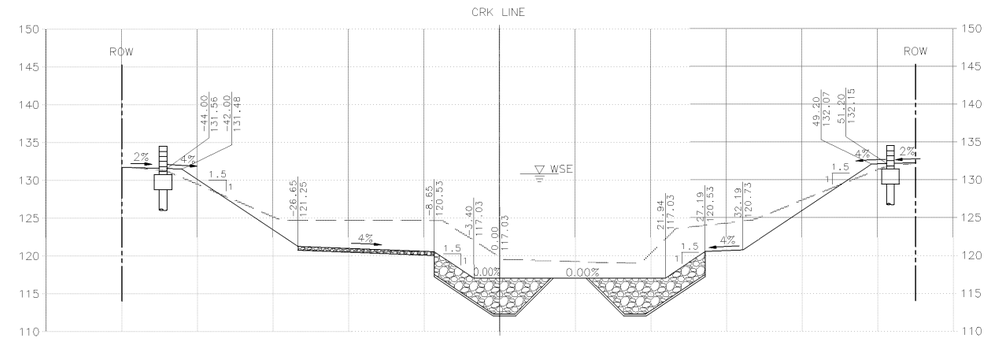

CROSS SECTION–STA. 228+00

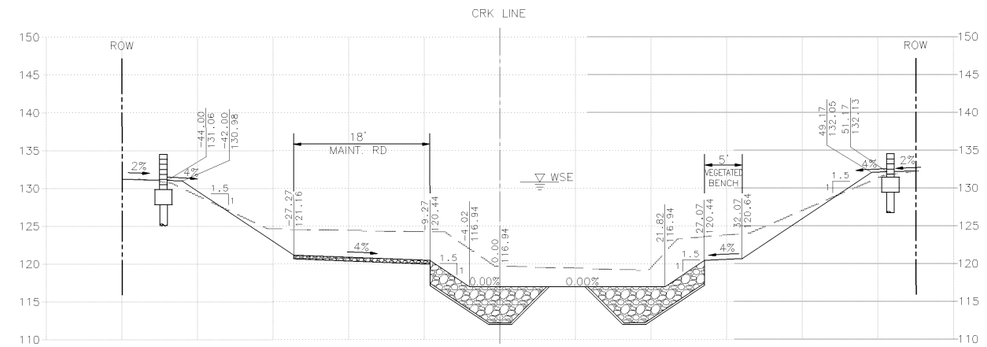

CROSS SECTION–STA. 227+00

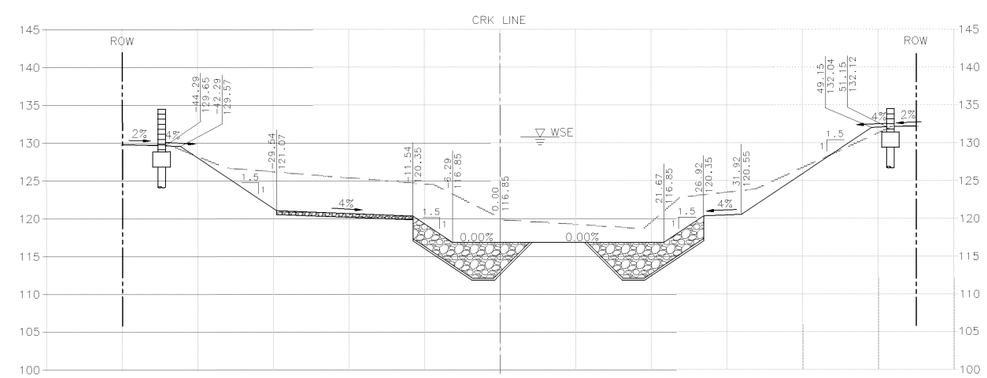

CROSS SECTION–STA. 226+00

REV	DESCRIPTION	DATE	APPR

REFERENCE INFORMATION AND NOTES

1. HORIZONTAL DIMENSIONS SHOWN ARE PERPENDICULAR TO CHANNEL BOTTOM (CONTROL).
2. FOR GEOMETRY AND LAYOUT OF CENTERLINE OF CHANNEL BOTTOM SEE SHT. C–5.
3. ALL STATIONING SHOWN ARE ALONG CRK LINE (NOT ALONG SURVEY P–LINE).
4. CROSS SECTIONS PROVIDED ARE FOR REFERENCE ONLY.

MARK THOMAS & COMPANY, INC.
1960 ZANKER ROAD
SAN JOSE, CA 95112

DATE 03/26/10
DESIGN BP
DRAWN AB
CHECKED AZ

REGISTERED PROFESSIONAL ENGINEER
JIMMY W. SIMS
No. 35458
Exp. 09/30/11
CIVIL
STATE OF CALIFORNIA

Santa Clara Valley Water District

ACCEPTED BY DISTRICT

PROJECT MANAGER DATE

PROJECT NAME AND SHEET DESCRIPTION:
FINAL DESIGN FOR LOWER SILVER CREEK
REACH 6B–MOSS POINT DRIVE TO
CUNNINGHAM AVENUE
CROSS SECTIONS
STA. 223+00 TO 228+00

SCALE 1"=10'

VERIFY SCALES
0 1"
BAR IS ONE INCH ON ORIGINAL DRAWING IF NOT ONE INCH ON THIS SHEET, ADJUST SCALES ACCORDINGLY

PROJECT NUMBER 40264008

SHEET CODE: C–19

PAGE NUMBER: 27 OF 53

USERNAME: abarajas Mar 25, 2010-03:05:47pm
FILENAME:C18-C22 – Cross Sections.dwg
DOCUMENT NUMBER: LOS-CY-XS-4026-41846

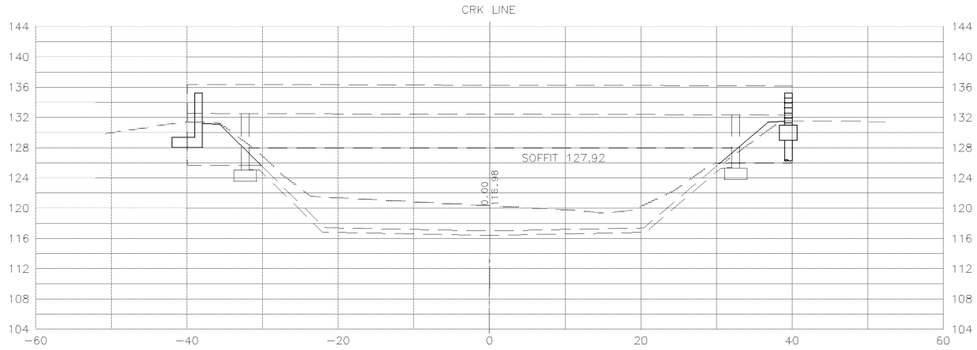

CROSS SECTION–STA. 230+60.73

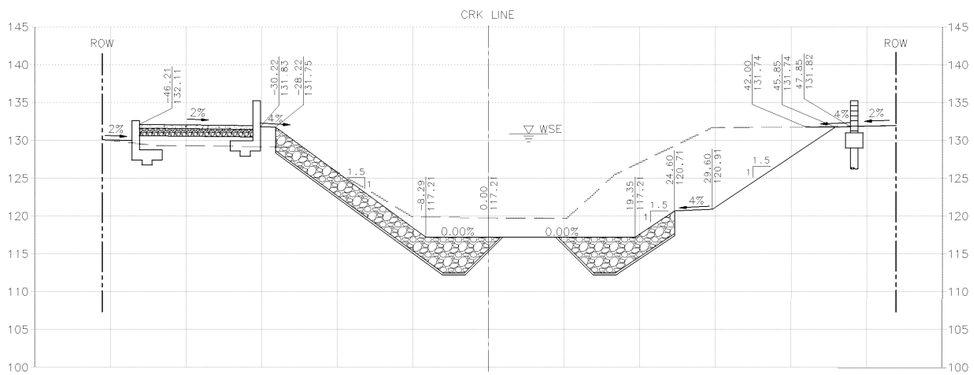

CROSS SECTION–STA. 230+00

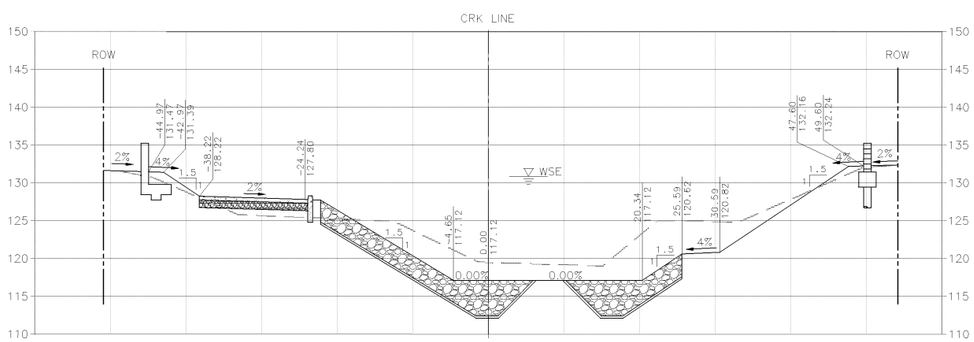

CROSS SECTION–STA. 229+00

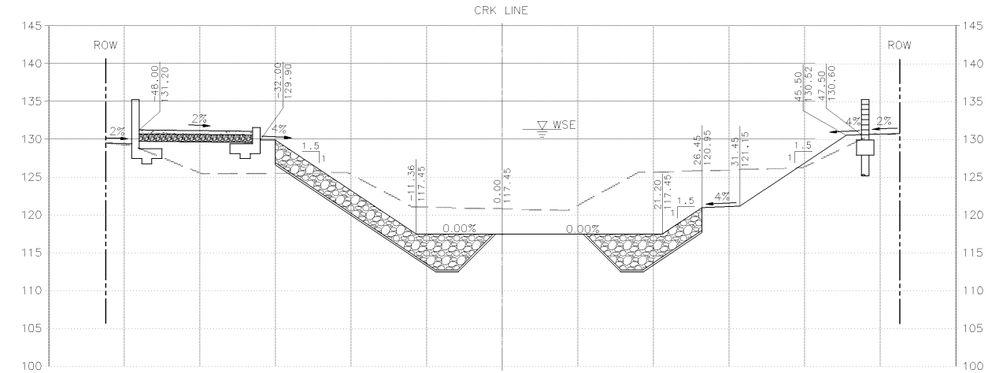

CROSS SECTION–STA. 233+00

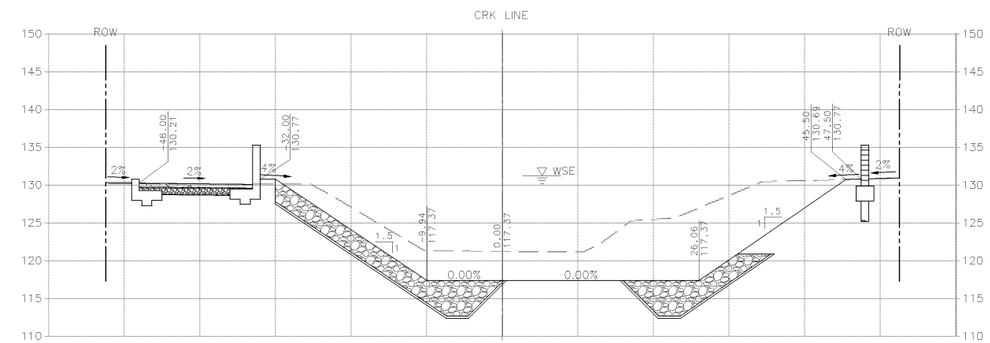

CROSS SECTION–STA. 232+00

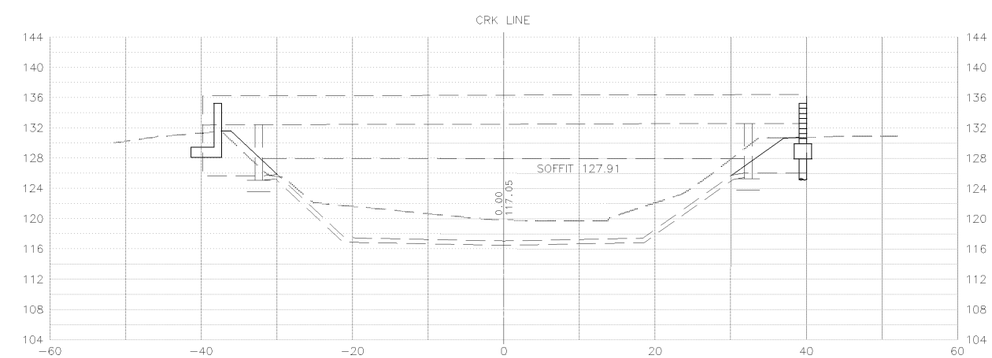

CROSS SECTION–STA. 231+43.10

REV	DESCRIPTION	DATE	APPR

REFERENCE INFORMATION AND NOTES

1. HORIZONTAL DIMENSIONS SHOWN ARE PERPENDICULAR TO CHANNEL BOTTOM (CONTROL).
2. FOR GEOMETRY AND LAYOUT OF CENTERLINE OF CHANNEL BOTTOM SEE SHT. C–5.
3. ALL STATIONING SHOWN ARE ALONG CRK LINE (NOT ALONG SURVEY P–LINE).
4. CROSS SECTIONS PROVIDED ARE FOR REFERENCE ONLY.

MARK THOMAS & COMPANY, INC.
1960 ZANKER ROAD
SAN JOSE, CA 95112

DATE 03/26/10
DESIGN BP
DRAWN AB
CHECKED AZ

REGISTERED PROFESSIONAL ENGINEER
JIMMY W. SIMS
No. 35458
Exp. 09/30/11
CIVIL
STATE OF CALIFORNIA

Santa Clara Valley Water District

ACCEPTED BY DISTRICT

PROJECT MANAGER DATE

PROJECT NAME AND SHEET DESCRIPTION:
FINAL DESIGN FOR LOWER SILVER CREEK
REACH 6B–MOSS POINT DRIVE TO
CUNNINGHAM AVENUE
CROSS SECTIONS
STA. 229+00 TO 233+00

SCALE 1"=10'

VERIFY SCALES
0 1"
BAR IS ONE INCH ON ORIGINAL DRAWING
IF NOT ONE INCH ON THIS SHEET, ADJUST SCALES ACCORDINGLY

PROJECT NUMBER 40264008

SHEET CODE: C–20

PAGE NUMBER: 28 OF 53

USERNAME: abarajas Mar 25, 2010–03:05:55pm
FILENAME:C18–C22 – Cross Sections.dwg
DOCUMENT NUMBER: LOS–CY–XS–4026–41847

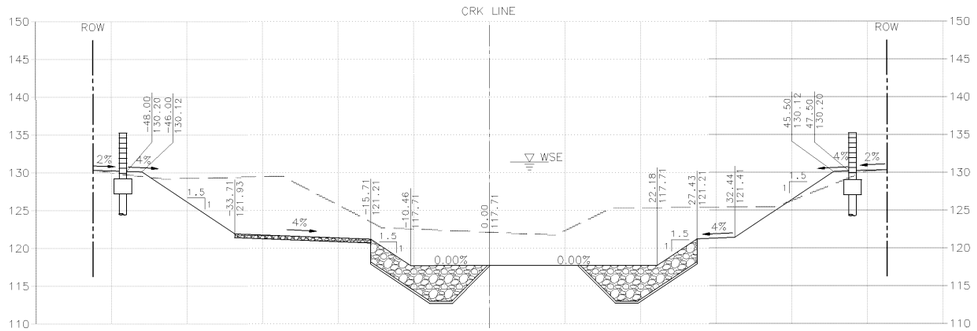

CROSS SECTION–STA. 236+00

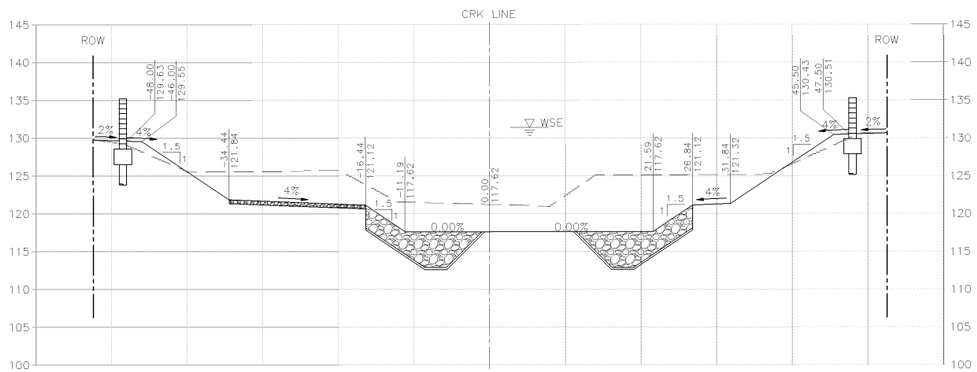

CROSS SECTION–STA. 235+00

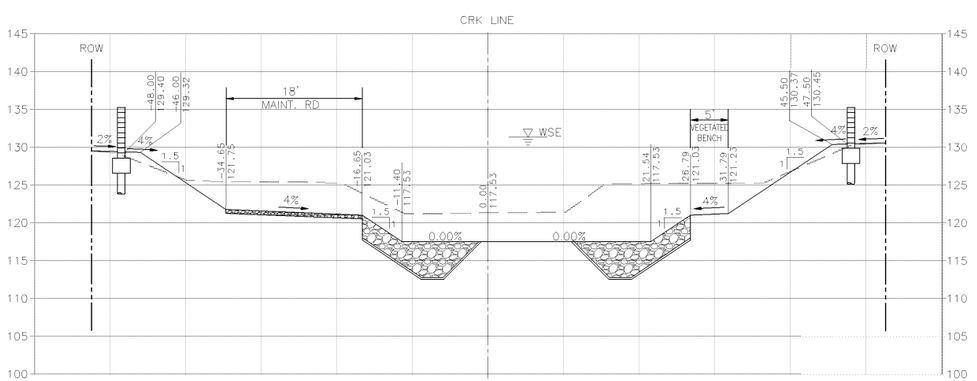

CROSS SECTION–STA. 234+00

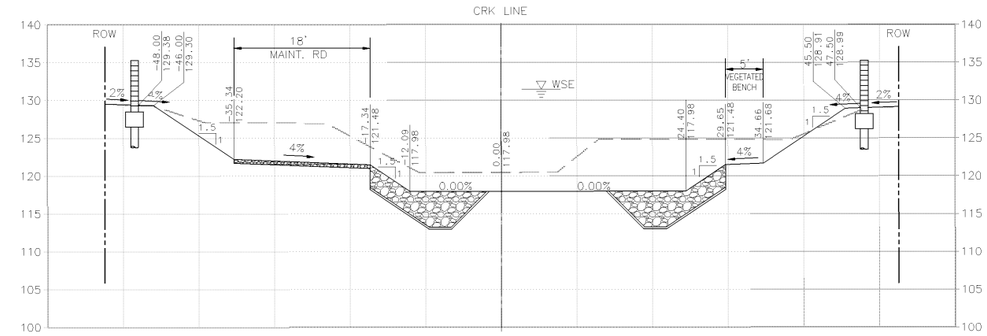

CROSS SECTION–STA. 239+00

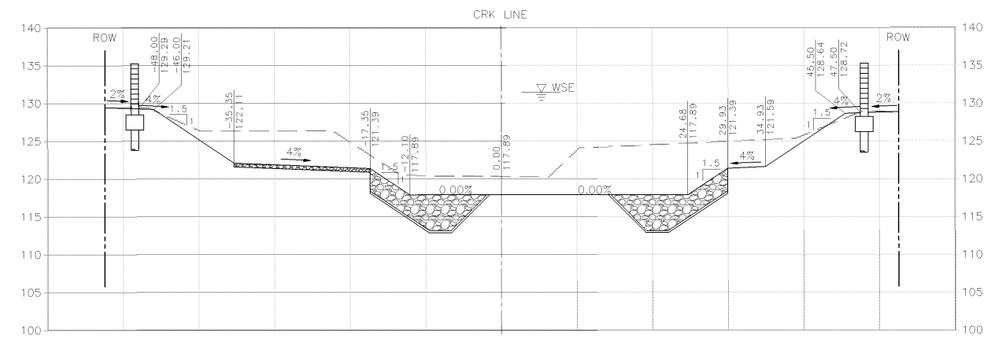

CROSS SECTION–STA. 238+00

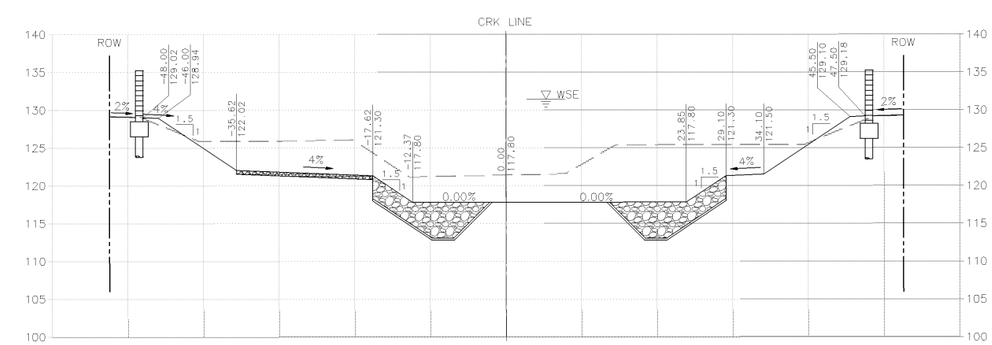

CROSS SECTION–STA. 237+00

REV	DESCRIPTION	DATE	APPR

REFERENCE INFORMATION AND NOTES

1. HORIZONTAL DIMENSIONS SHOWN ARE PERPENDICULAR TO CHANNEL BOTTOM (CONTROL).
2. FOR GEOMETRY AND LAYOUT OF CENTERLINE OF CHANNEL BOTTOM SEE SHT. C–5.
3. ALL STATIONING SHOWN ARE ALONG CRK LINE (NOT ALONG SURVEY P–LINE).
4. CROSS SECTIONS PROVIDED ARE FOR REFERENCE ONLY.

MARK THOMAS & COMPANY, INC.
1960 ZANKER ROAD
SAN JOSE, CA 95112

DATE 03/26/10
DESIGN BP
DRAWN AB
CHECKED AZ

REGISTERED PROFESSIONAL ENGINEER
JIMMY W. SIMS
No. 35458
Exp. 09/30/11
CIVIL
STATE OF CALIFORNIA

Santa Clara Valley Water District

ACCEPTED BY DISTRICT

PROJECT MANAGER DATE

PROJECT NAME AND SHEET DESCRIPTION:

FINAL DESIGN FOR LOWER SILVER CREEK
REACH 6B–MOSS POINT DRIVE TO
CUNNINGHAM AVENUE
CROSS SECTIONS
STA. 234+00 TO STA. 239+00

SCALE 1"=10'

VERIFY SCALES 0 1"
BAR IS ONE INCH ON ORIGINAL DRAWING. IF NOT ONE INCH ON THIS SHEET, ADJUST SCALES ACCORDINGLY.

PROJECT NUMBER 40264008

SHEET CODE: C–21

PAGE NUMBER: 29 OF 53

USERNAME: abarajas Mar 25, 2010-03:06:02pm
FILENAME:C18-C22 – Cross Sections.dwg
DOCUMENT NUMBER: LOS-CY-XS-4026-41848

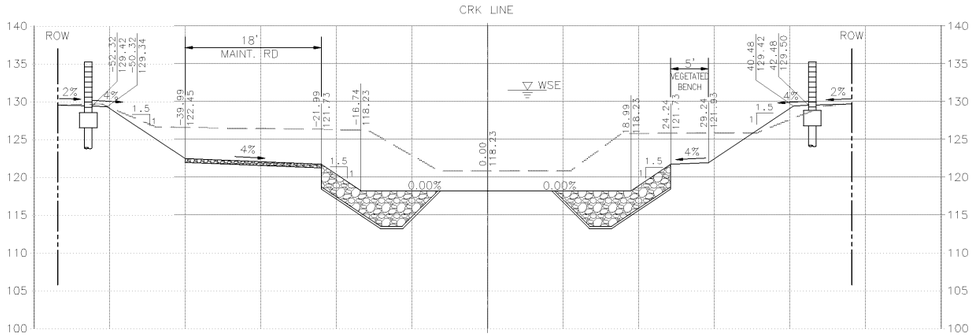

CROSS SECTION–STA. 242+00

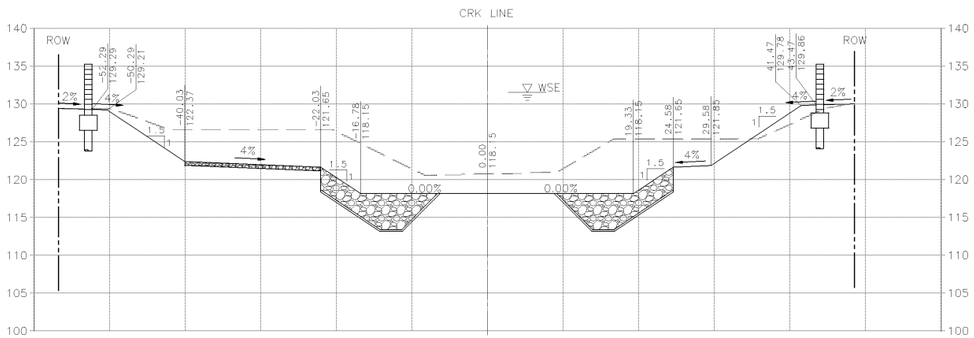

CROSS SECTION–STA. 241+00

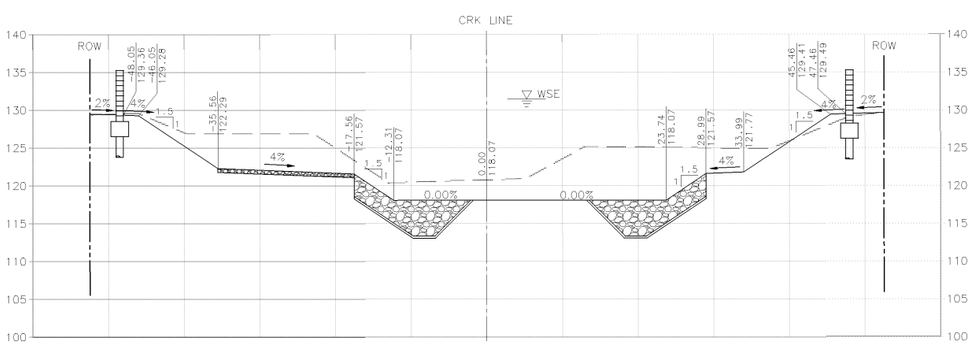

CROSS SECTION–STA. 240+00

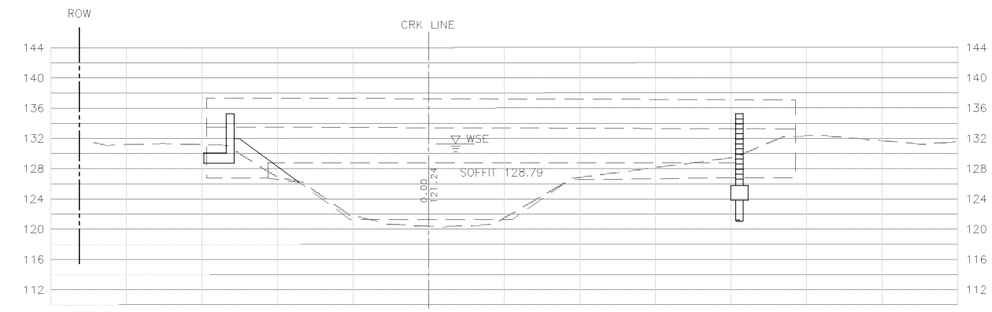

CROSS SECTION–STA. 244+33.61

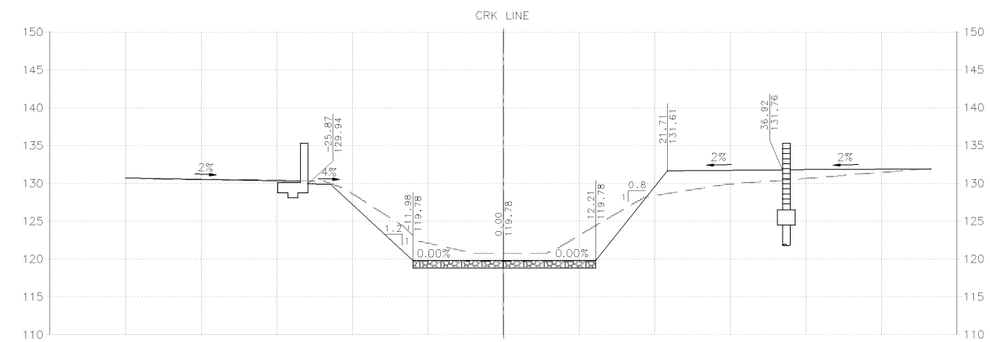

CROSS SECTION–STA. 244+00

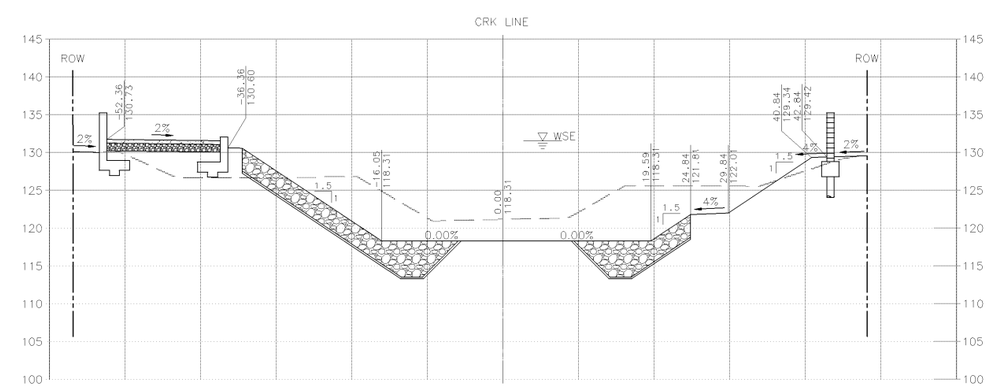

CROSS SECTION–STA. 243+00

REV	DESCRIPTION	DATE	APPR

REFERENCE INFORMATION AND NOTES

1. HORIZONTAL DIMENSIONS SHOWN ARE PERPENDICULAR TO CHANNEL BOTTOM (CONTROL).
2. FOR GEOMETRY AND LAYOUT OF CENTERLINE OF CHANNEL BOTTOM SEE SHT. C–5.
3. ALL STATIONING SHOWN ARE ALONG CRK LINE (NOT ALONG SURVEY P–LINE).
4. CROSS SECTIONS PROVIDED ARE FOR REFERENCE ONLY.

MARK THOMAS & COMPANY, INC.
1960 ZANKER ROAD
SAN JOSE, CA 95112

DATE 03/26/10
DESIGN BP
DRAWN AB
CHECKED AZ

REGISTERED PROFESSIONAL ENGINEER
JIMMY W. SIMS
No. 35458
Exp. 09/30/11
CIVIL
STATE OF CALIFORNIA

Santa Clara Valley Water District

ACCEPTED BY DISTRICT

PROJECT MANAGER DATE

PROJECT NAME AND SHEET DESCRIPTION:

FINAL DESIGN FOR LOWER SILVER CREEK
REACH 6B–MOSS POINT DRIVE TO
CUNNINGHAM AVENUE
CROSS SECTIONS
STA. 240+00 TO 244+33.61

SCALE 1"=10'

VERIFY SCALES 0 1"
BAR IS ONE INCH ON ORIGINAL DRAWING IF NOT ONE INCH ON THIS SHEET, ADJUST SCALES ACCORDINGLY

PROJECT NUMBER 40264008

SHEET CODE: C–22

PAGE NUMBER: 30 OF 53

DOCUMENT NUMBER: LOS-CY-XS-4026-41849
USERNAME: abarajas Mar 25, 2010-03:06:11pm
FILENAME:C18-C22 – Cross Sections.dwg

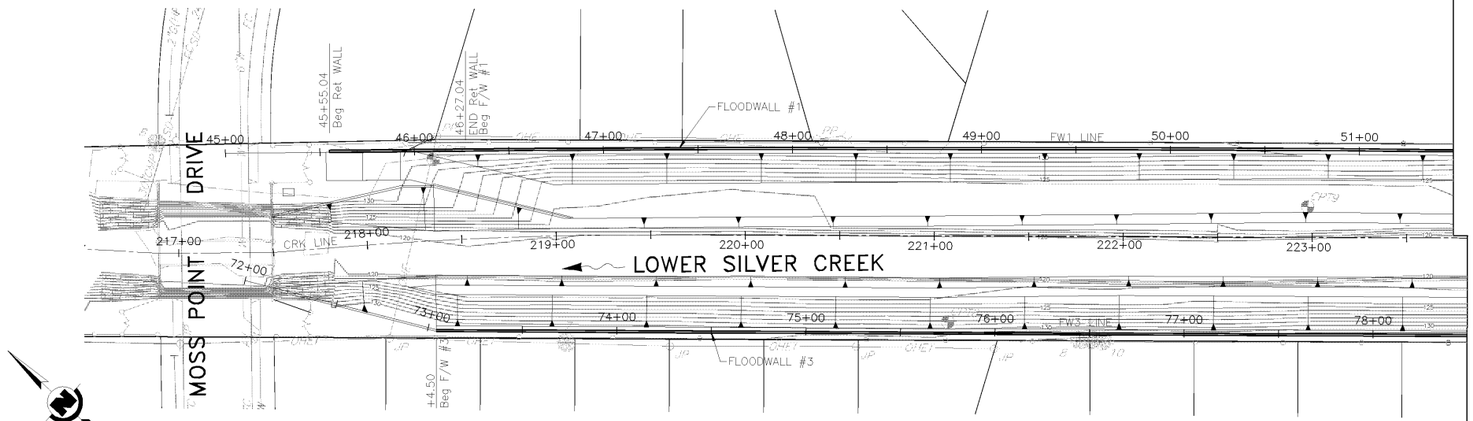

MATCH LINE STA. FW1 51+50, FW3 78+50
SEE SHEET S-2

PLAN
SCALE: 1"=40'

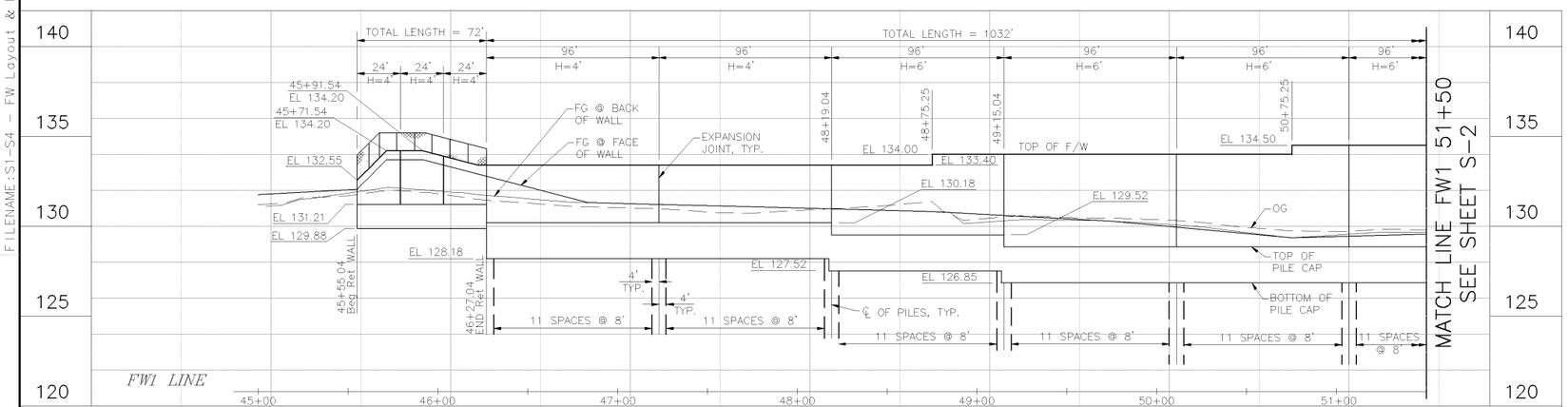

MATCH LINE FW1 51+50
SEE SHEET S-2

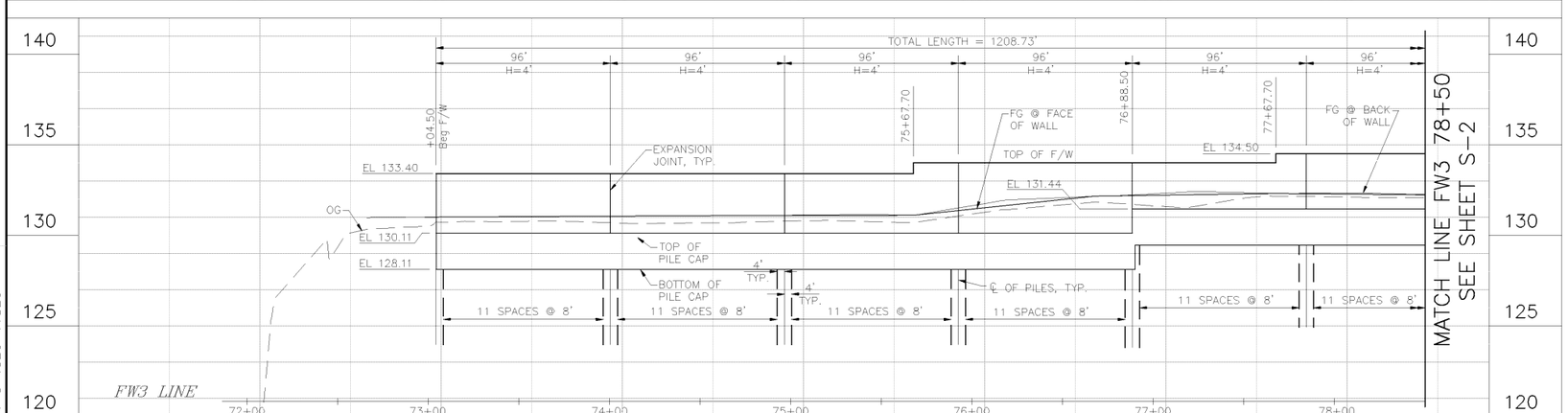

MATCH LINE FW3 78+50
SEE SHEET S-2

ELEVATION
SCALE: HORIZ:1"=40', VERT: 1"=4'

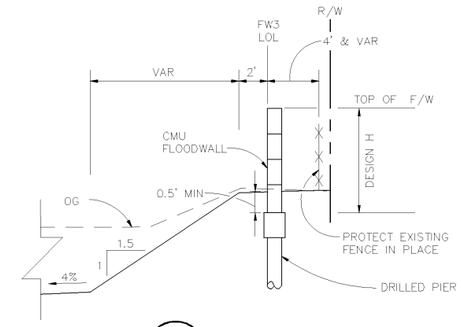

SECTION C – FW3 73+04.50 TO 85+13.23
SCALE:NTS

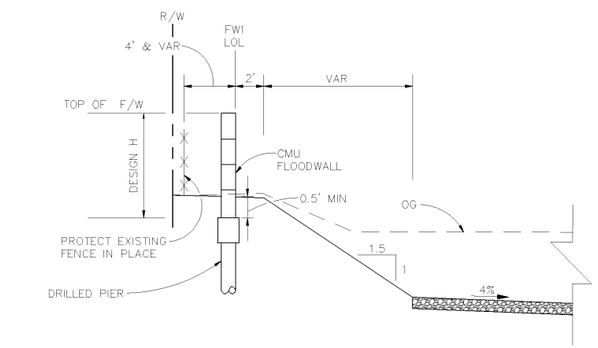

SECTION B – FW1 46+27.04 TO 56+59.04
SCALE:NTS

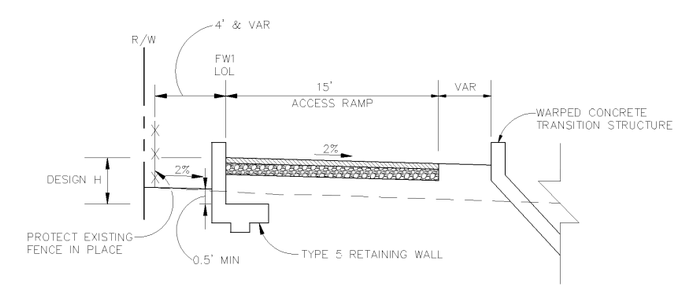

SECTION A – FW1 45+55.04 TO 46+27.04
SCALE:NTS

REV	DESCRIPTION	DATE	APPR

REFERENCE INFORMATION AND NOTES

MARK THOMAS & COMPANY, INC.
1960 ZANKER ROAD
SAN JOSE, CA 95112

DATE 03/26/10
DESIGN BP
DRAWN AB
CHECKED AZ

REGISTERED PROFESSIONAL ENGINEER
JIMMY W. SIMS
No. 35458
Exp. 09/30/11
CIVIL
STATE OF CALIFORNIA

Santa Clara Valley Water District

ACCEPTED BY DISTRICT

PROJECT MANAGER DATE

PROJECT NAME AND SHEET DESCRIPTION:
FINAL DESIGN FOR LOWER SILVER CREEK
REACH 6B-MOSS POINT DRIVE TO
CUNNINGHAM AVENUE
FLOODWALL LAYOUT AND ELEVATION
STA. FW1 45+00 TO 51+50 & FW3 72+00 TO 78+50

SCALE AS SHOWN

VERIFY SCALES 0 1"
BAR IS ONE INCH ON ORIGINAL DRAWING IF NOT ONE INCH ON THIS SHEET, ADJUST SCALES ACCORDINGLY

PROJECT NUMBER 40264008

SHEET CODE: S-1

PAGE NUMBER: 31 OF 53

USERNAME: abarajas Mar 25, 2010-03:07:26pm
FILENAME:S1-S4 - FW Layout & Elev.dwg
DOCUMENT NUMBER: LOS-CY-C-4026-41826

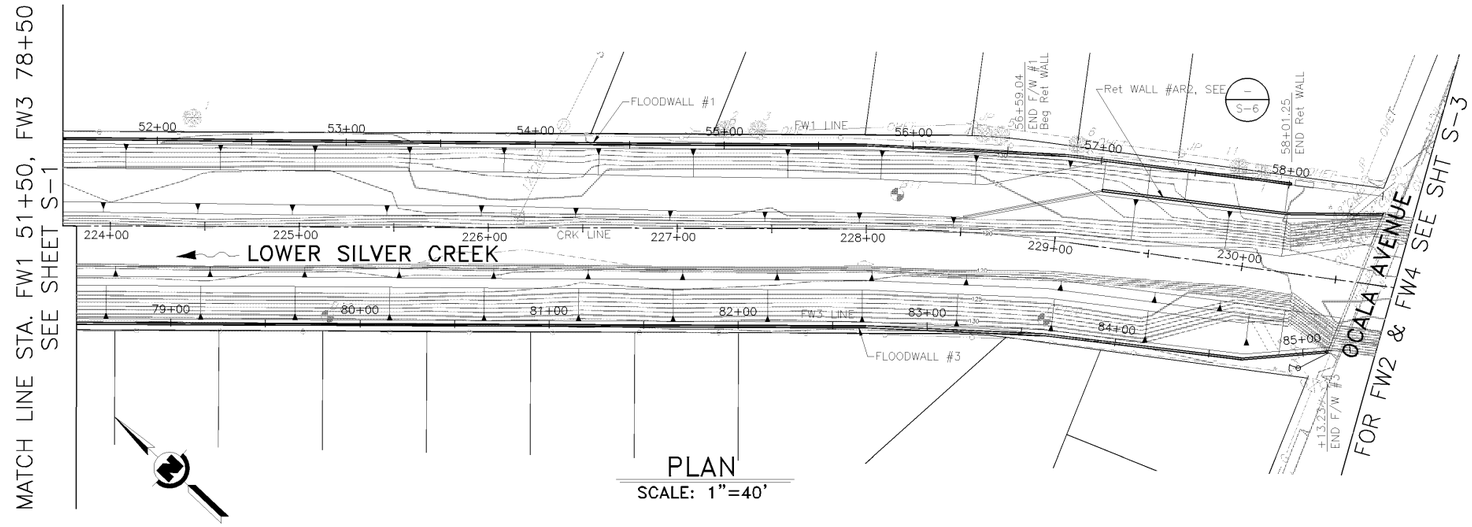

PLAN

SCALE: 1"=40'

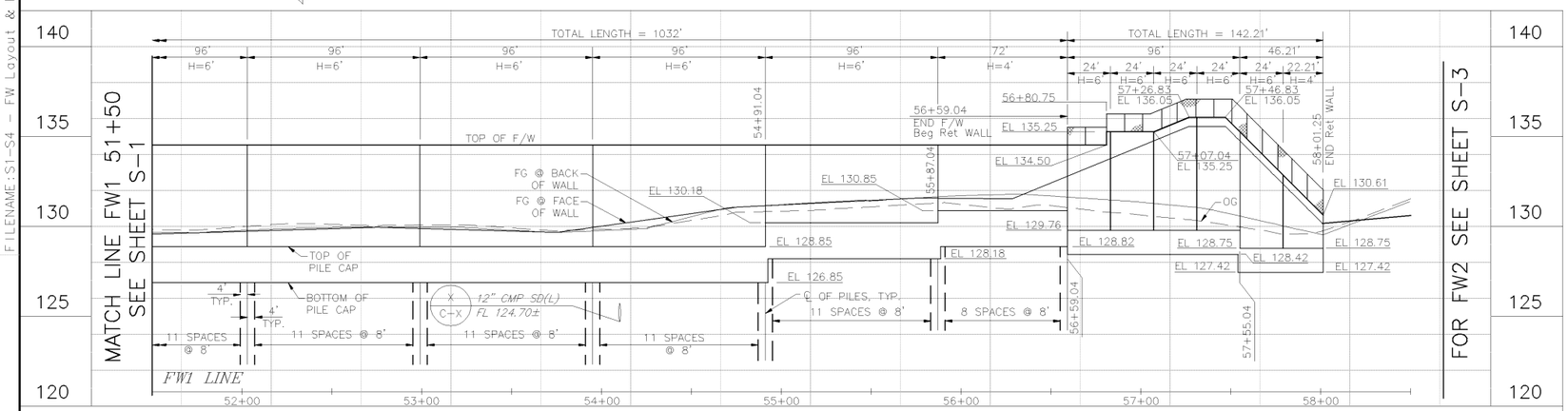

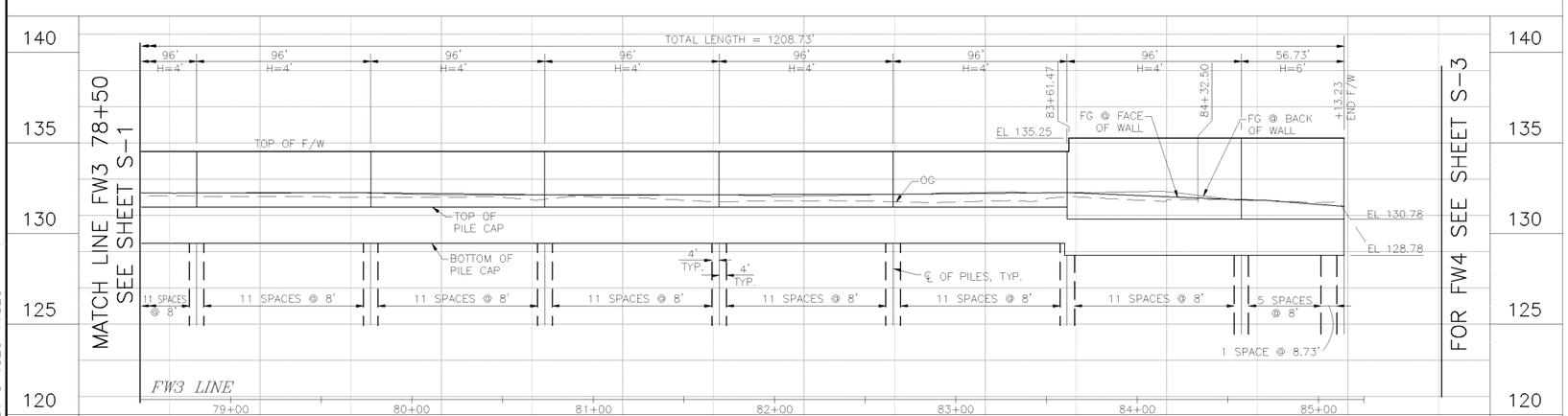

ELEVATION

SCALE: HORIZ:1"=40', VERT: 1"=4'

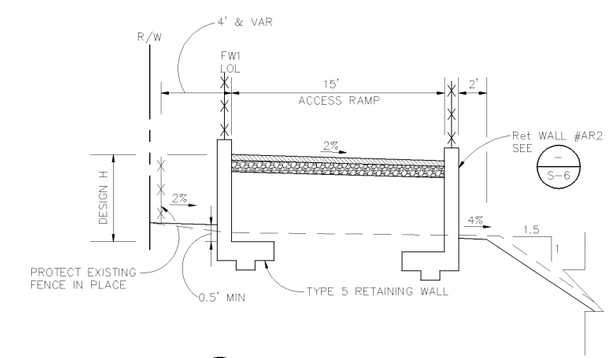

SECTION A – FW1 56+59.04 TO 58+01.25

SCALE:NTS

REV	DESCRIPTION	DATE	APPR	REFERENCE INFORMATION AND NOTES

MARK THOMAS & COMPANY, INC.
1960 ZANKER ROAD
SAN JOSE, CA 95112

DATE 03/26/10
DESIGN BP
DRAWN AB
CHECKED AZ

REGISTERED PROFESSIONAL ENGINEER
JIMMY W. SIMS
No. 35458
Exp. 09/30/11
CIVIL
STATE OF CALIFORNIA

Santa Clara Valley Water District

ACCEPTED BY DISTRICT

PROJECT MANAGER DATE

PROJECT NAME AND SHEET DESCRIPTION:

FINAL DESIGN FOR LOWER SILVER CREEK
REACH 6B-MOSS POINT DRIVE TO
CUNNINGHAM AVENUE
FLOODWALL LAYOUT AND ELEVATION
STA. FW1 51+50 TO 58+50 & FW3 78+50 TO 85+25

SCALE: AS SHOWN

VERIFY SCALES 0 1"
BAR IS ONE INCH ON ORIGINAL DRAWING. IF NOT ONE INCH ON THIS SHEET, ADJUST SCALES ACCORDINGLY

PROJECT NUMBER: 40264008

SHEET CODE: S-2

PAGE NUMBER: 32 OF 53

USERNAME: abarajas Mar 25, 2010-03:07:53pm
FILENAME:S1-S4 - FW Layout & Elev.dwg
DOCUMENT NUMBER: LOS-CY-C-4026-41826

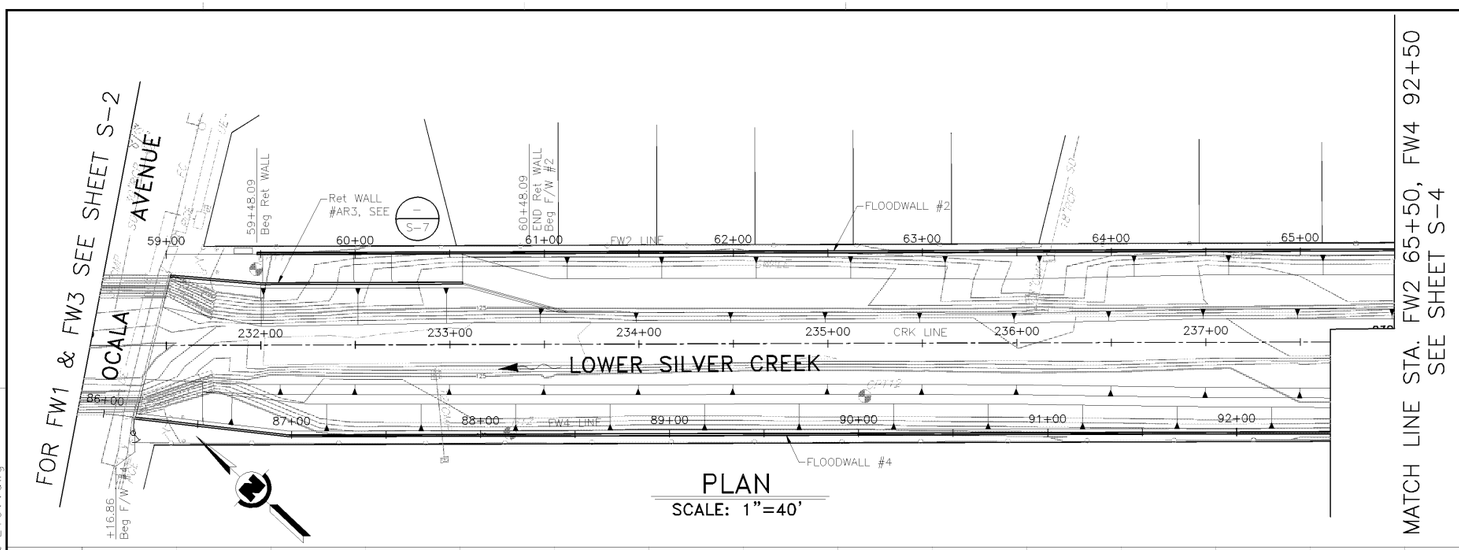

PLAN

SCALE: 1"=40'

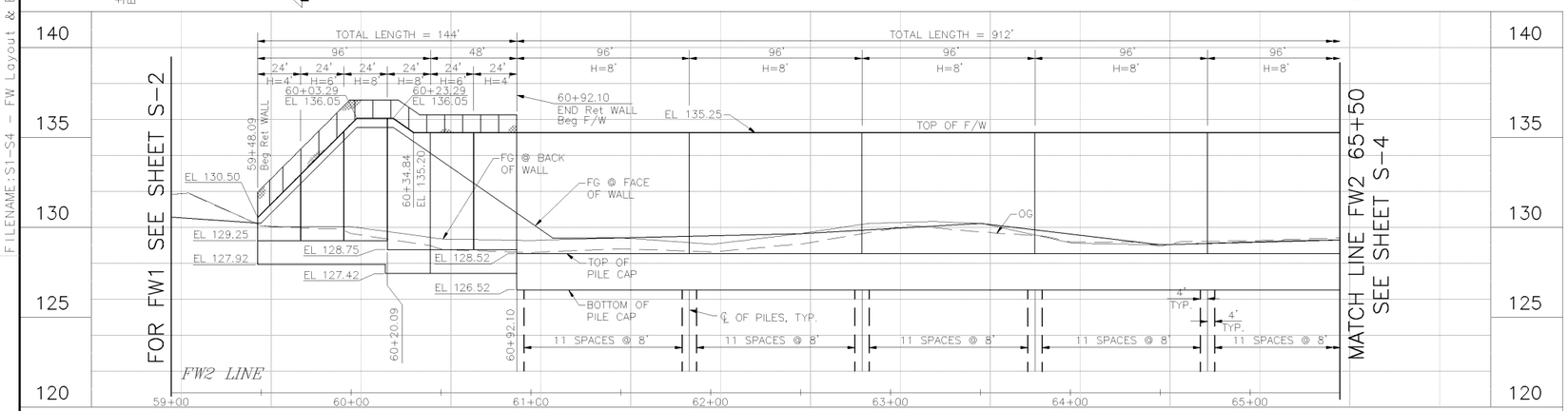

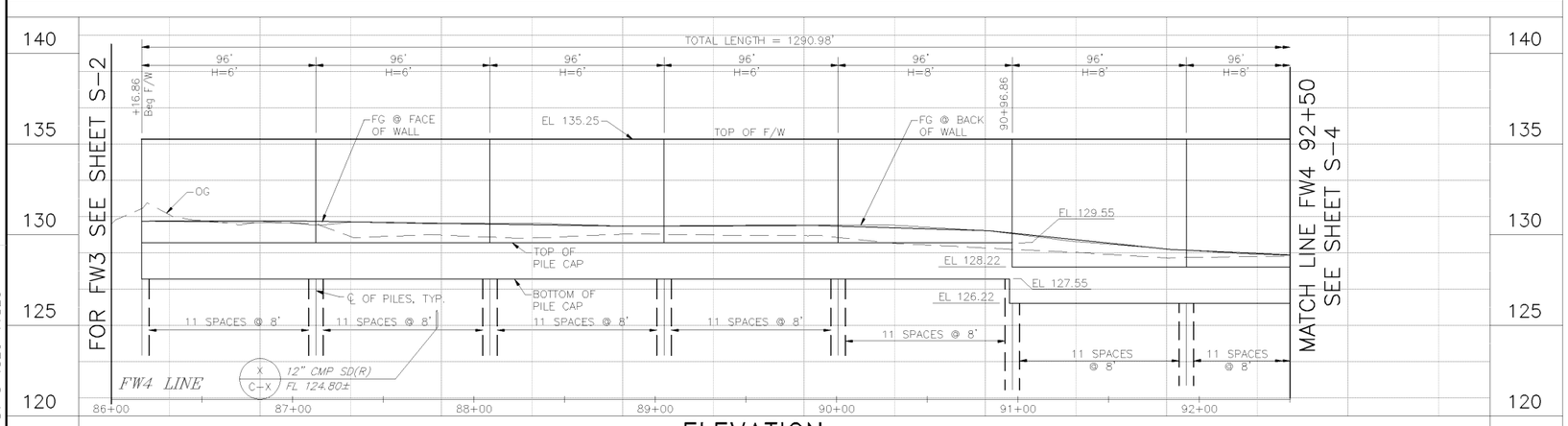

ELEVATION

SCALE: HORIZ:1"=40', VERT: 1"=4'

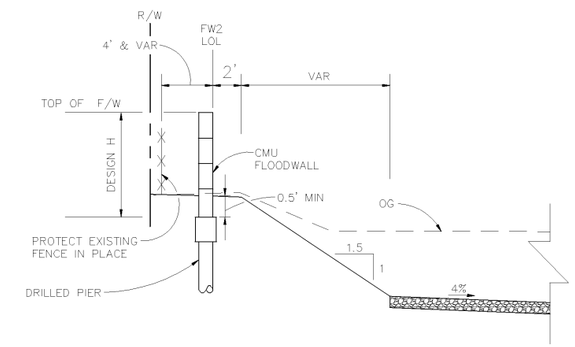

SECTION B FW2 60+92.09 TO 70+04.09
SCALE:NTS

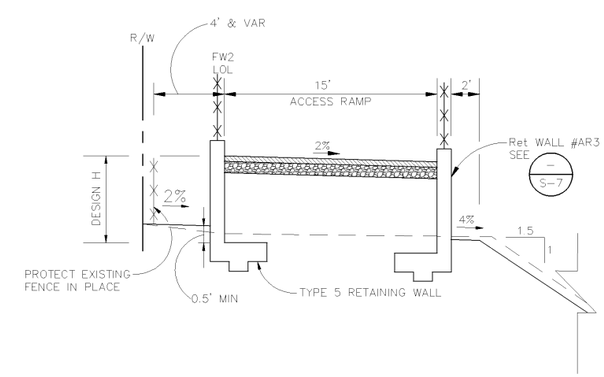

SECTION A FW2 59+48.09 TO 60.92.09
SCALE:NTS

REV	DESCRIPTION	DATE	APPR	REFERENCE INFORMATION AND NOTES

MARK THOMAS & COMPANY, INC.
1960 ZANKER ROAD
SAN JOSE, CA 95112

DATE 03/26/10
DESIGN BP
DRAWN AB
CHECKED AZ

REGISTERED PROFESSIONAL ENGINEER JIMMY W. SIMS No. 35458 Exp. 09/30/11 CIVIL STATE OF CALIFORNIA

Santa Clara Valley Water District

ACCEPTED BY DISTRICT

PROJECT MANAGER DATE

PROJECT NAME AND SHEET DESCRIPTION:
FINAL DESIGN FOR LOWER SILVER CREEK
REACH 6B-MOSS POINT DRIVE TO
CUNNINGHAM AVENUE
FLOODWALL LAYOUT AND ELEVATION
STA. FW2 59+00 TO 65+50 & FW4 86+00 TO 92+50

SCALE AS SHOWN

VERIFY SCALES 0 1"
BAR IS ONE INCH ON ORIGINAL DRAWING. IF NOT ONE INCH ON THIS SHEET, ADJUST SCALES ACCORDINGLY.

PROJECT NUMBER 40264008

SHEET CODE: S-3

PAGE NUMBER: 33 OF 53

USERNAME: abarajas Mar 25, 2010-03:08:24pm
FILENAME:S1-S4 - FW Layout & Elev.dwg
DOCUMENT NUMBER: LOS-CY-C-4026-41826

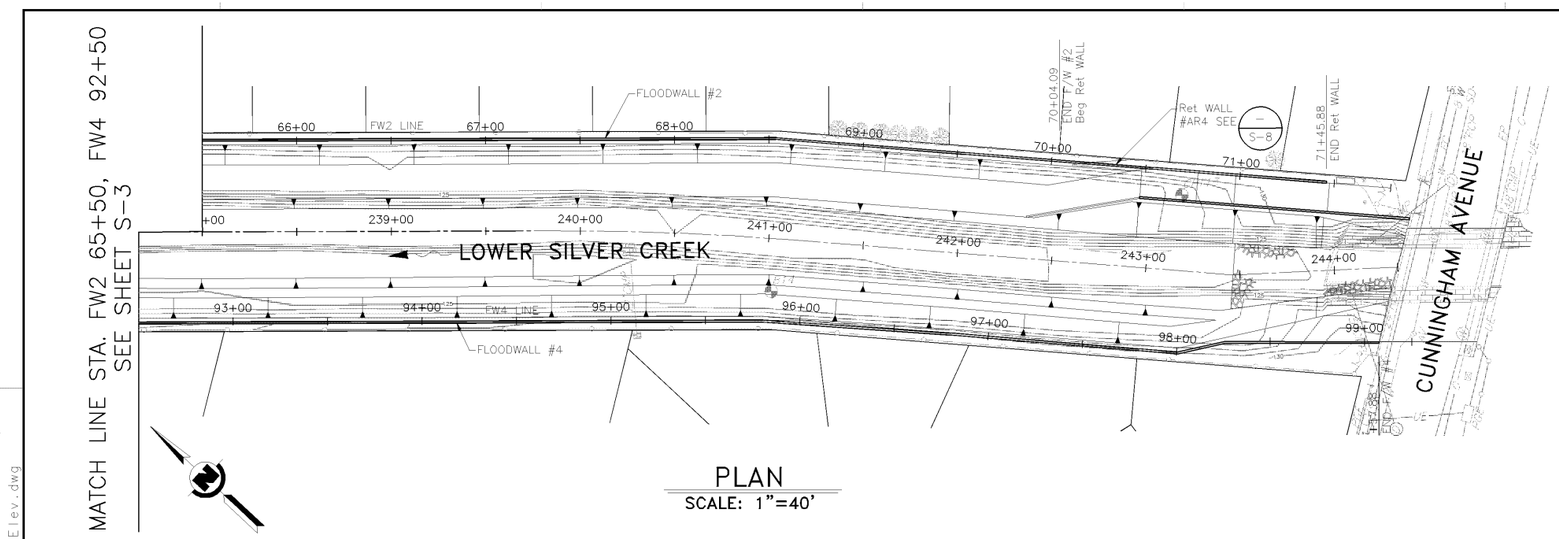

PLAN

SCALE: 1"=40'

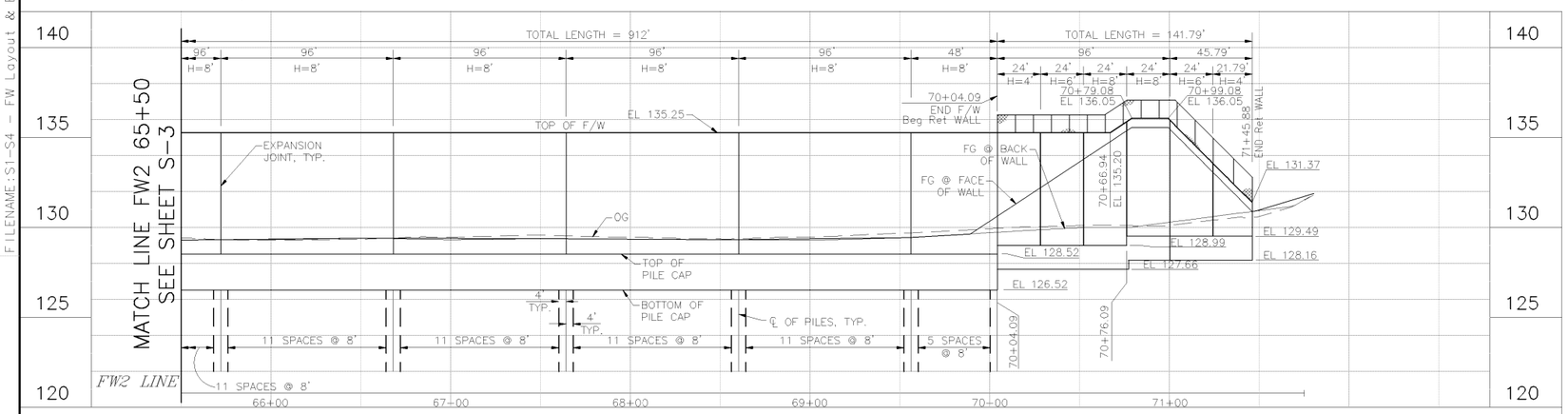

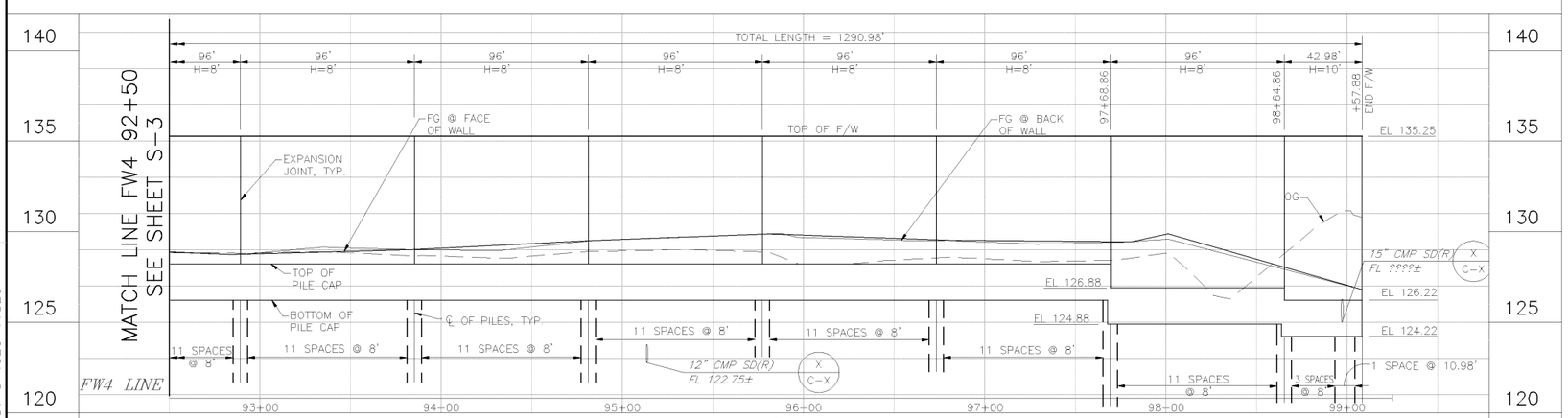

ELEVATION

SCALE: HORIZ:1"=40', VERT: 1"=4'

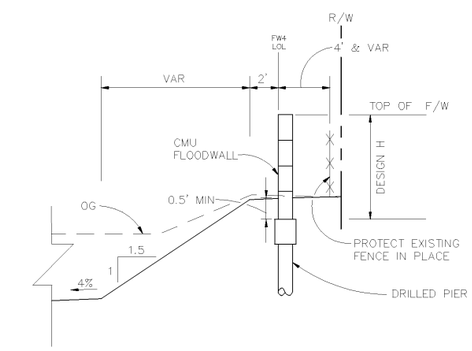

SECTION B – FW4 86+16.86 TO 99+07.84

SCALE:NTS

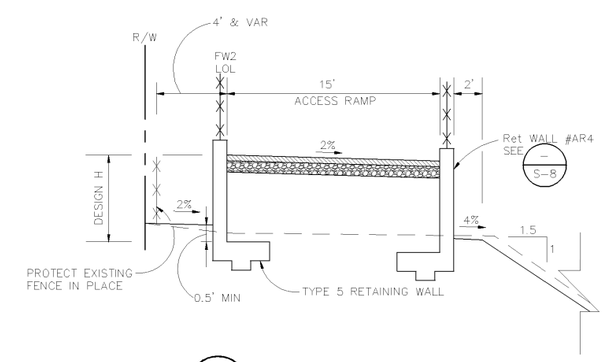

SECTION A – FW2 70+04.09 TO 71+45.88

SCALE:NTS

REV	DESCRIPTION	DATE	APPR

REFERENCE INFORMATION AND NOTES

MARK THOMAS & COMPANY, INC.
1960 ZANKER ROAD
SAN JOSE, CA 95112

DATE 03/26/10
DESIGN BP
DRAWN AB
CHECKED AZ

REGISTERED PROFESSIONAL ENGINEER
JIMMY W. SIMS
No. 35458
Exp. 09/30/11
CIVIL
STATE OF CALIFORNIA

Santa Clara Valley Water District

ACCEPTED BY DISTRICT

PROJECT MANAGER DATE

PROJECT NAME AND SHEET DESCRIPTION:

FINAL DESIGN FOR LOWER SILVER CREEK
REACH 6B-MOSS POINT DRIVE TO
CUNNINGHAM AVENUE
FLOODWALL LAYOUT AND ELEVATION
STA. FW2 65+50 TO 71+50 & FW4 92+50 TO 99+25

SCALE: AS SHOWN

VERIFY SCALES 0 1"
BAR IS ONE INCH ON ORIGINAL DRAWING IF NOT ONE INCH ON THIS SHEET, ADJUST SCALES ACCORDINGLY

PROJECT NUMBER: 40264008

SHEET CODE: S-4

PAGE NUMBER: 34 OF 53

USERNAME: abarajas Mar 25, 2010-03:08:55pm
FILENAME:S1-S4 - FW Layout & Elev.dwg
DOCUMENT NUMBER: LOS-CY-C-4026-41826

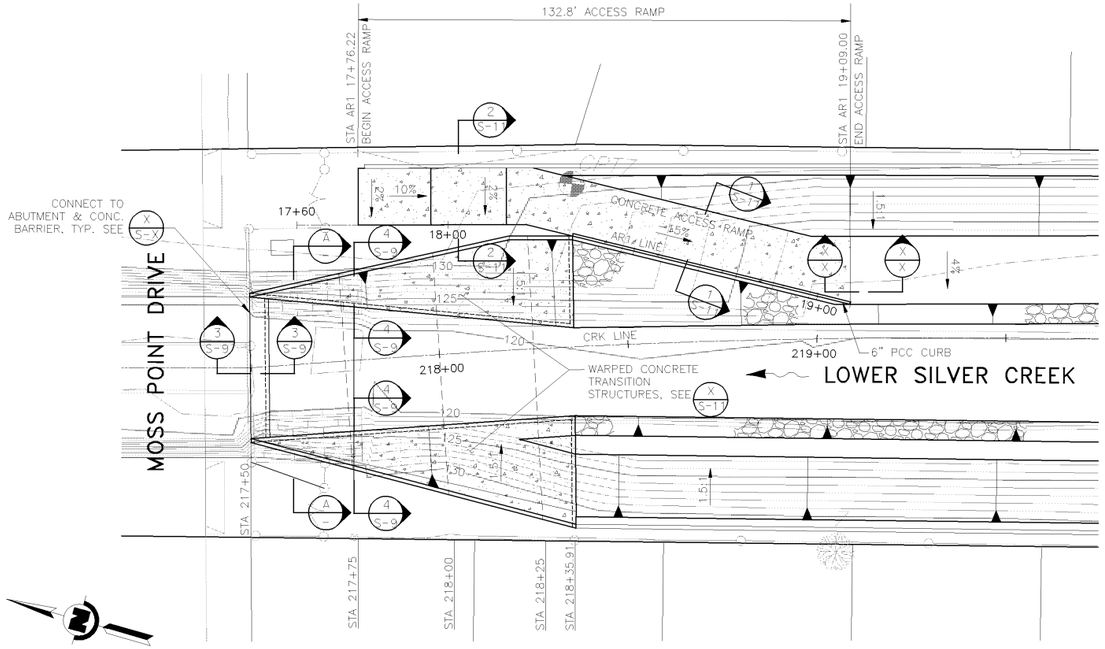

DETAIL 1/– ACCESS RAMP AND CHANNEL TRANSITION – SOUTH SIDE OF MOSS POINT DRIVE

SCALE: 1"=20'

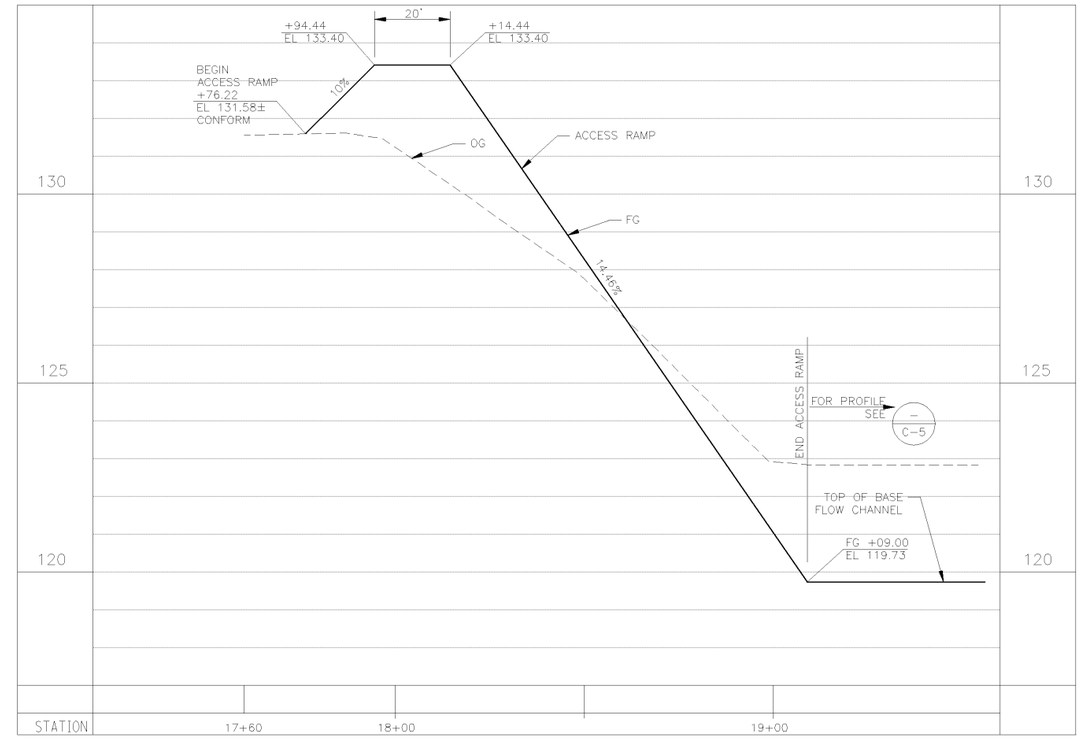

AR1 PROFILE

SCALE: HORIZ: 1"=20' VERT: 1"=2'

STATION	A		B		C		D		E		F		G		H		I		J	
	OFFSET (Lt)	ELEV	OFFSET (Lt)	ELEV	OFFSET (Lt)	ELEV	OFFSET (Lt)	ELEV	OFFSET (Rt)	ELEV	OFFSET (Rt)	ELEV	OFFSET (Rt)	ELEV	OFFSET (Rt)	ELEV	OFFSET (Rt)	ELEV	OFFSET (Rt)	ELEV
217+50	19.69	XX	18.67	XX	18.67	XX	18.67	XX	18.76	XX	N/A	N/A	N/A	N/A	18.76	XX	18.76	XX	19.76	XX
217+75	23.27	XX	22.26	XX	22.26	XX	14.62	XX	18.71	XX	N/A	N/A	N/A	N/A	27.50	XX	27.50	XX	28.50	XX
218+00	26.98	XX	25.97	XX	25.97	XX	10.48	XX	18.69	XX	N/A	N/A	N/A	N/A	35.96	XX	35.96	XX	36.96	XX
218+25	29.85	XX	28.84	XX	28.84	XX	6.60	XX	18.41	XX	23.66	XX	25.37	XX	44.19	XX	44.19	XX	45.21	XX
218+35.91	29.26	XX	28.27	XX	28.27	XX	4.99	XX	18.22	XX	23.47	XX	28.43	XX	46.96	XX	46.96	XX	47.96	XX

DETAIL 2/– WARPED CONCRETE TRANSITION CONTROLS

SCALE: NTS

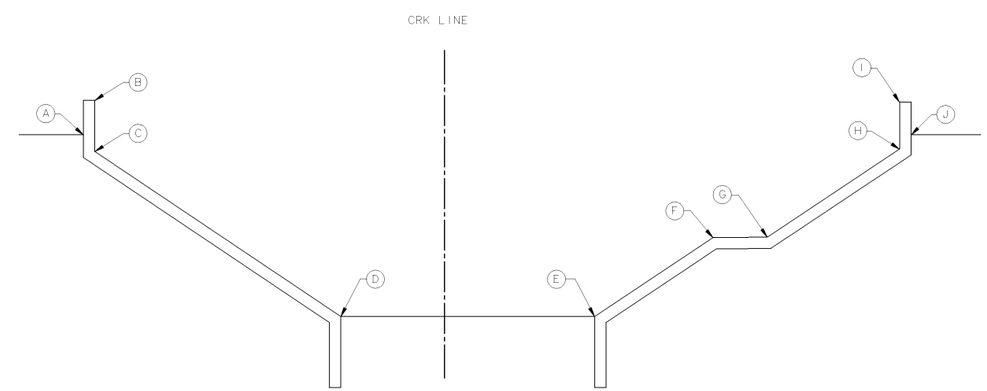

SECTION A/– WARPED CONCRETE TRANSITION

SCALE: N.T.S.

REV	DESCRIPTION	DATE	APPR	REFERENCE INFORMATION AND NOTES

MARK THOMAS & COMPANY, INC.
1960 ZANKER ROAD
SAN JOSE, CA 95112

DATE 03/26/10
DESIGN BP
DRAWN AB
CHECKED AZ

REGISTERED PROFESSIONAL ENGINEER
JIMMY W. SIMS
No. 35458
Exp. 09/30/11
CIVIL
STATE OF CALIFORNIA

Santa Clara Valley Water District

ACCEPTED BY DISTRICT

PROJECT MANAGER DATE

PROJECT NAME AND SHEET DESCRIPTION:

FINAL DESIGN FOR LOWER SILVER CREEK
REACH 6B–MOSS POINT DRIVE TO
CUNNINGHAM AVENUE
MOSS POINT DRIVE SOUTH ACCESS
RAMP AND CHANNEL TRANSITION

SCALE: AS SHOWN

VERIFY SCALES: 0 — 1"
BAR IS ONE INCH ON ORIGINAL DRAWING. IF NOT ONE INCH ON THIS SHEET, ADJUST SCALES ACCORDINGLY

PROJECT NUMBER: 40264008

SHEET CODE: S–5

PAGE NUMBER: 35 OF 53

USERNAME: abarajas Mar 25, 2010–03:59:45pm
FILENAME: S5–S8 – Ramp & Transition Det.dwg
DOCUMENT NUMBER: LOS–CY–CD–4026–41835

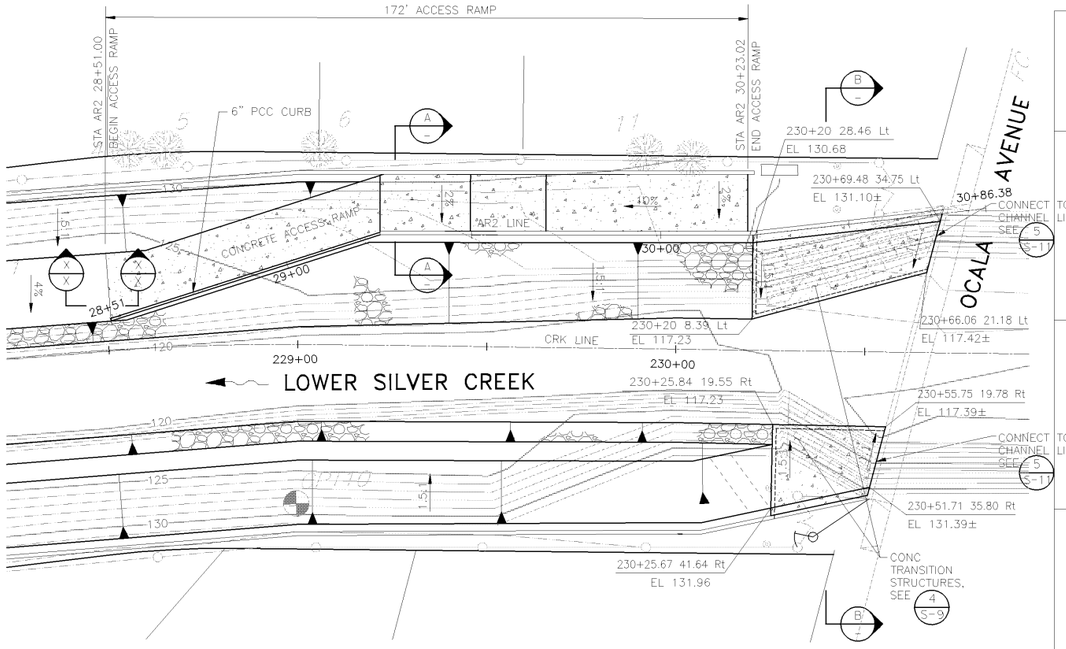

DETAIL 1 – ACCESS RAMP AND CHANNEL TRANSITION – NORTH SIDE OF OCALA AVENUE
SCALE: 1"=20'

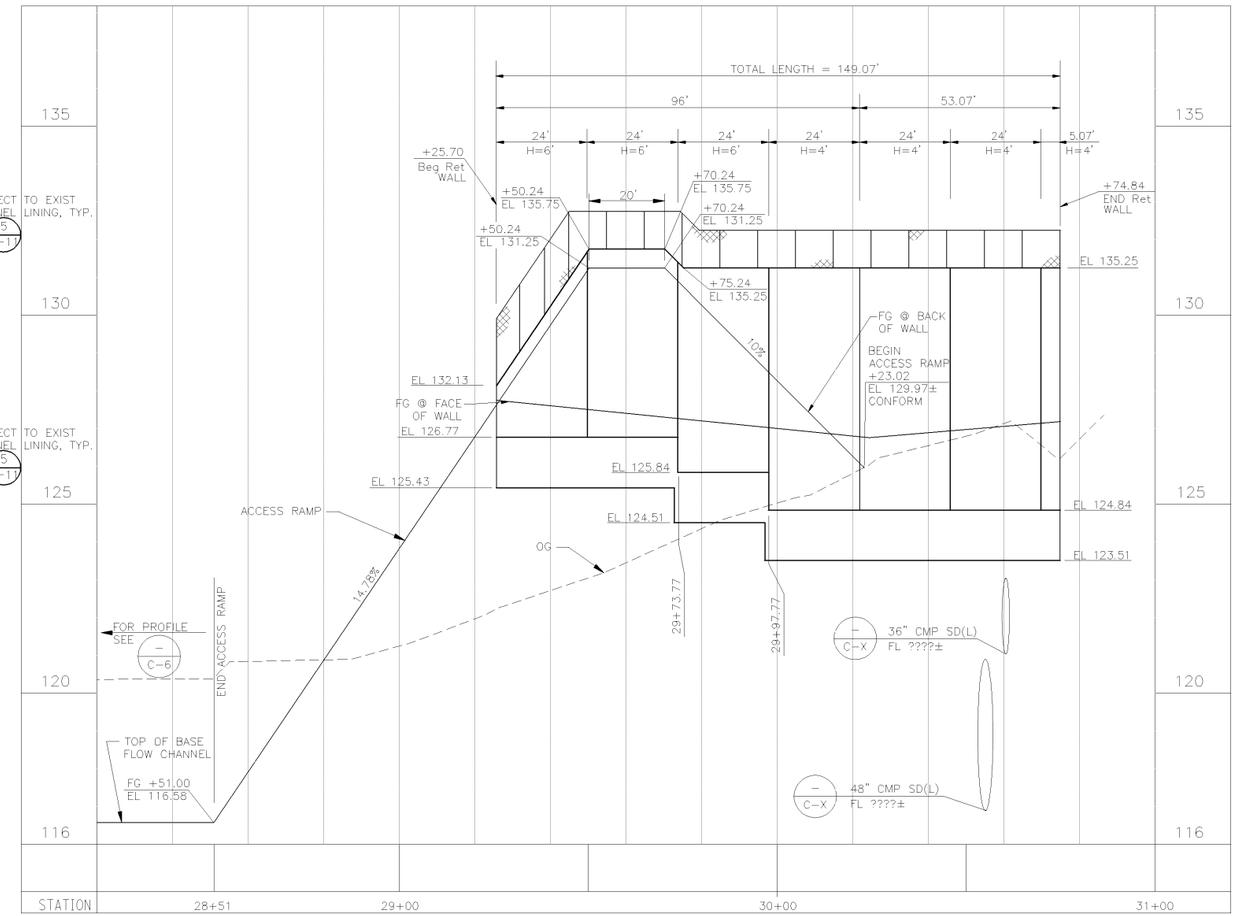

AR2 PROFILE
SCALE: HORIZ: 1"=20' VERT: 1"=2'

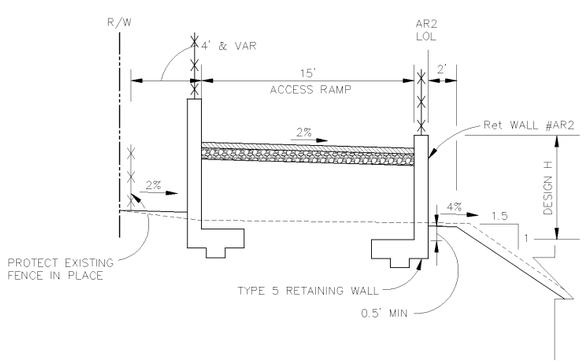

SECTION A – AR2 29+25.77 TO 30+24.34
SCALE: N.T.S.

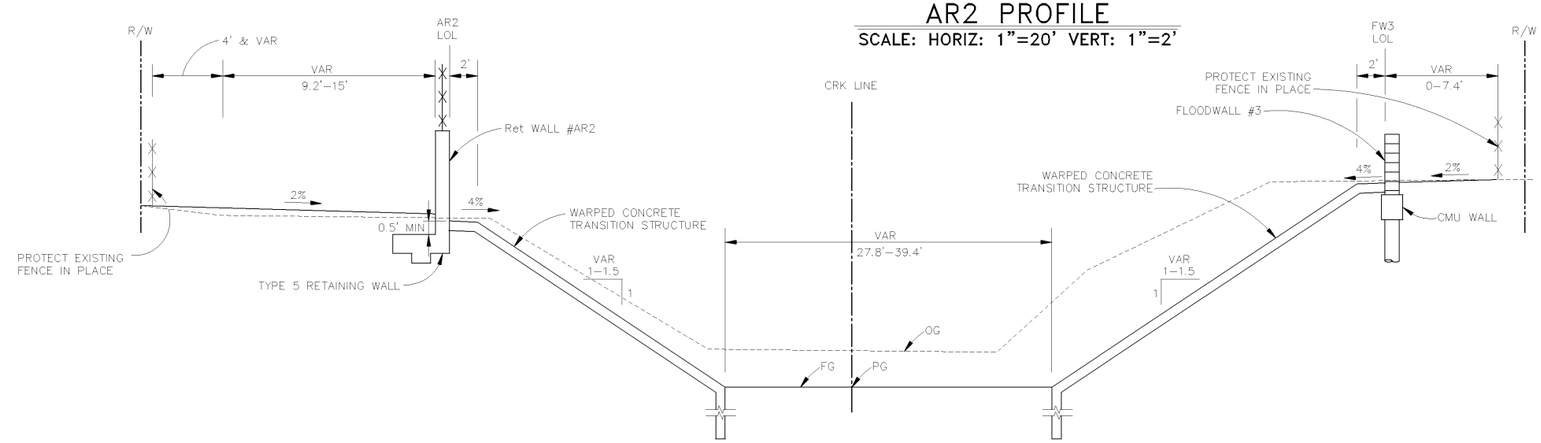

SECTION B – AR2 30+24.34 TO 30+74.84
SCALE: N.T.S.

REV	DESCRIPTION	DATE	APPR	REFERENCE INFORMATION AND NOTES

MARK THOMAS & COMPANY, INC.
1960 ZANKER ROAD
SAN JOSE, CA 95112

DATE 03/26/10
DESIGN BP
DRAWN AB
CHECKED AZ

REGISTERED PROFESSIONAL ENGINEER JIMMY W. SIMS No. 35458 Exp. 09/30/11 CIVIL STATE OF CALIFORNIA

Santa Clara Valley Water District
ACCEPTED BY DISTRICT
PROJECT MANAGER DATE

PROJECT NAME AND SHEET DESCRIPTION:
FINAL DESIGN FOR LOWER SILVER CREEK
REACH 6B-MOSS POINT DRIVE TO
CUNNINGHAM AVENUE
OCALA AVENUE NORTH ACCESS
RAMP AND CHANNEL TRANSITION

SCALE AS SHOWN
VERIFY SCALES 0 1"
BAR IS ONE INCH ON ORIGINAL DRAWING IF NOT ONE INCH ON THIS SHEET, ADJUST SCALES ACCORDINGLY

PROJECT NUMBER 40264008
SHEET CODE: S-6
PAGE NUMBER: 36 OF 53

USERNAME: abarajas Mar 25, 2010-04:00:19pm
FILENAME:S5-S8 - Ramp & Transition Det.dwg
DOCUMENT NUMBER: LOS-CY-CD-4026-41835

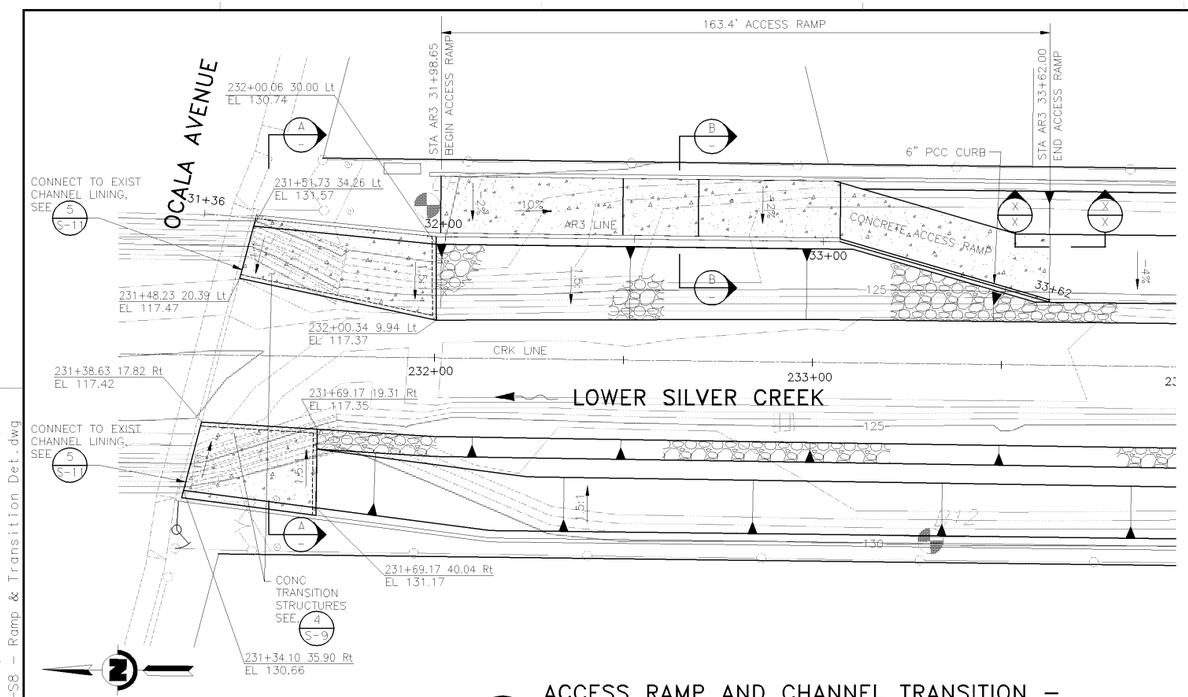

DETAIL 1 – ACCESS RAMP AND CHANNEL TRANSITION – SOUTH SIDE OF OCALA AVENUE
SCALE: 1"=20'

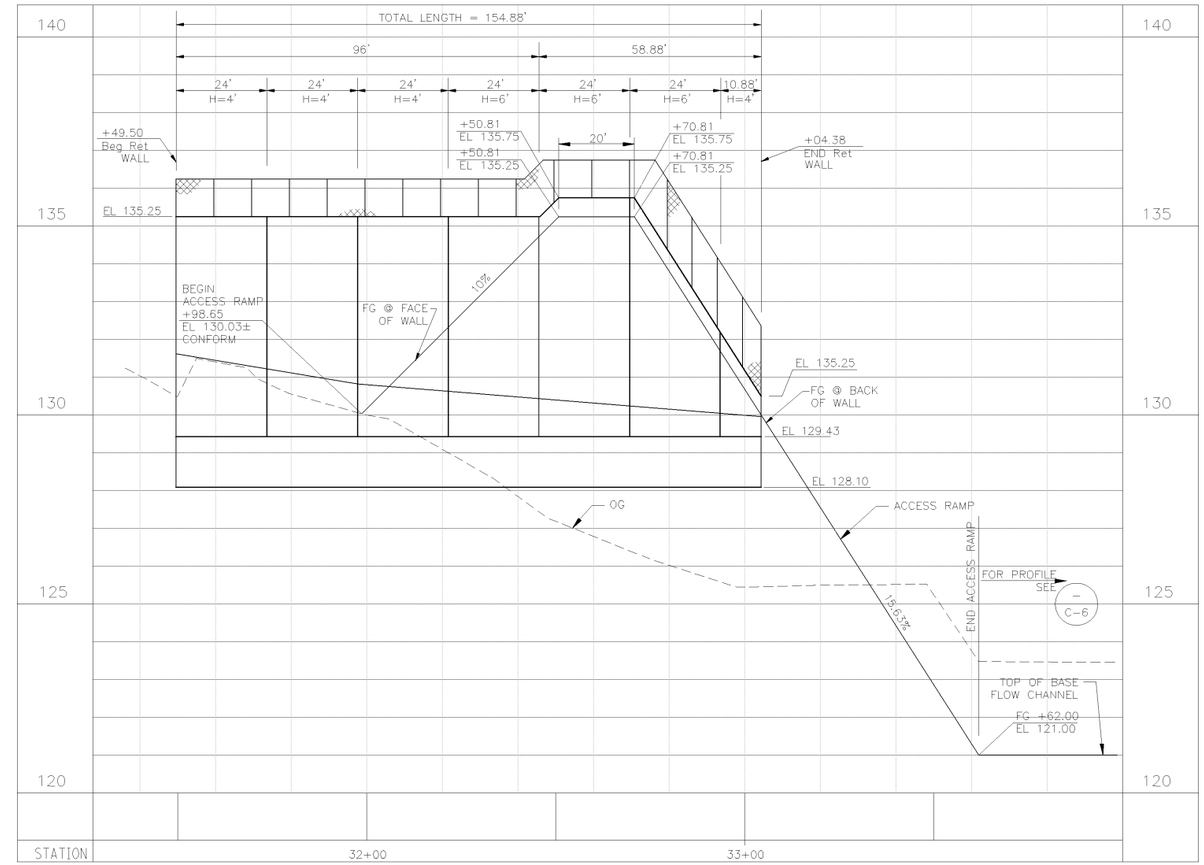

AR3 PROFILE
SCALE: HORIZ: 1"=20' VERT: 1"=2'

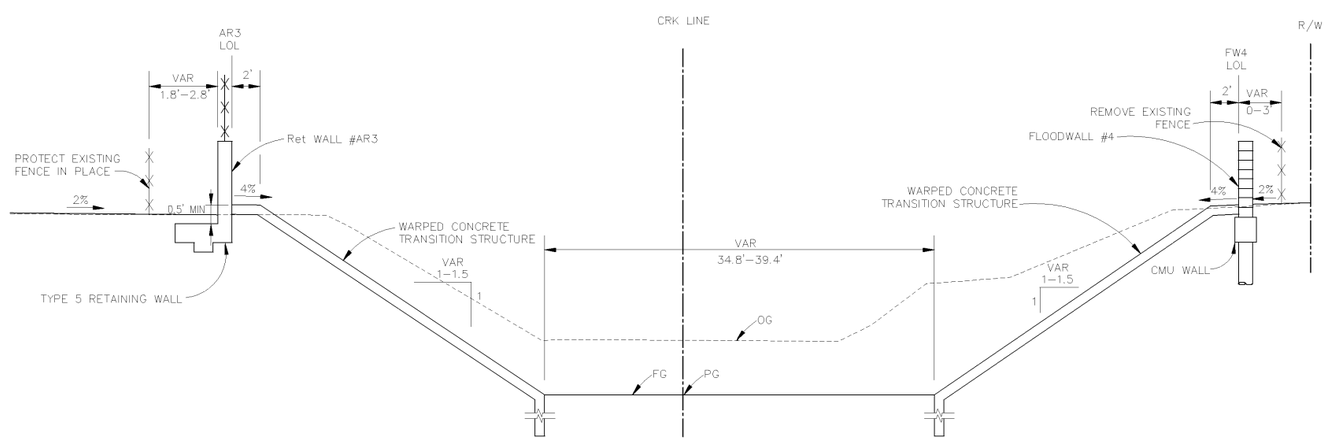

SECTION A – AR3 31+43.10 TO 31+49.50
SCALE: N.T.S.

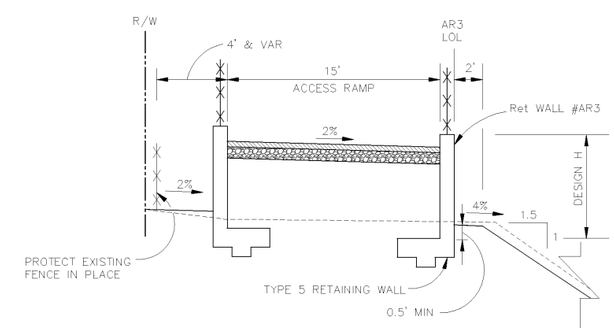

SECTION B – AR3 31+49.50 TO 33+04.38
SCALE: N.T.S.

REV	DESCRIPTION	DATE	APPR	REFERENCE INFORMATION AND NOTES

MARK THOMAS & COMPANY, INC.
1960 ZANKER ROAD
SAN JOSE, CA 95112

DATE 03/26/10
DESIGN BP
DRAWN AB
CHECKED AZ

REGISTERED PROFESSIONAL ENGINEER JIMMY W. SIMS No. 35458 Exp. 09/30/11 CIVIL STATE OF CALIFORNIA

Santa Clara Valley Water District

ACCEPTED BY DISTRICT
PROJECT MANAGER DATE

PROJECT NAME AND SHEET DESCRIPTION:
FINAL DESIGN FOR LOWER SILVER CREEK
REACH 6B–MOSS POINT DRIVE TO
CUNNINGHAM AVENUE
OCALA AVENUE SOUTH ACCESS
RAMP AND CHANNEL TRANSITION

SCALE AS SHOWN
VERIFY SCALES 0 1"
BAR IS ONE INCH ON ORIGINAL DRAWING. IF NOT ONE INCH ON THIS SHEET, ADJUST SCALES ACCORDINGLY.

PROJECT NUMBER 40264008
SHEET CODE: S–7
PAGE NUMBER: 37 OF 53

USERNAME: abarajas Mar 25, 2010-04:00:51pm
FILENAME:S5-S8 – Ramp & Transition Det.dwg
DOCUMENT NUMBER: LOS-CY-CD-4026-41835

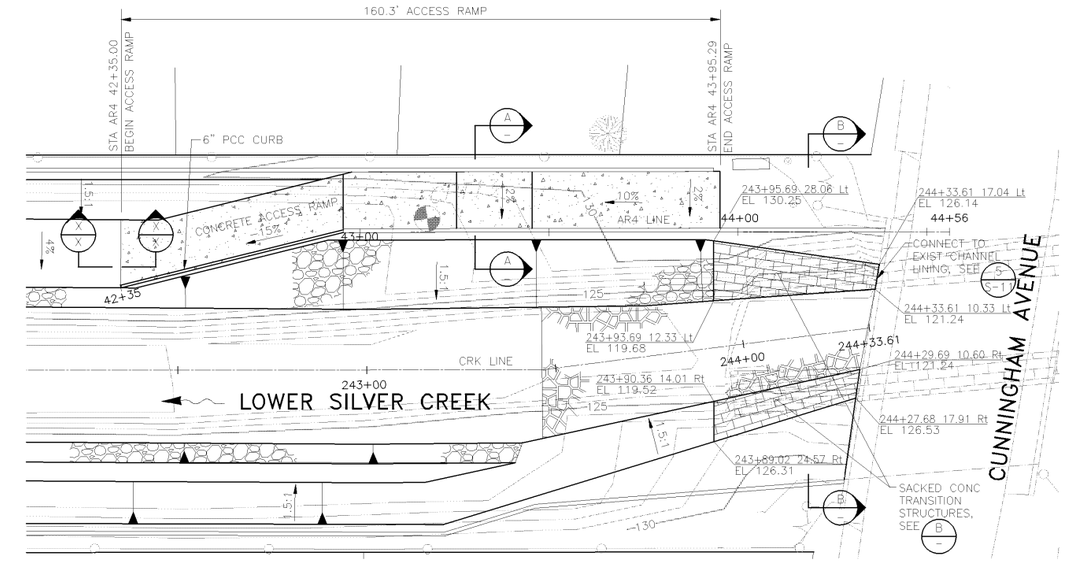

DETAIL 1 – ACCESS RAMP AND CHANNEL TRANSITION – NORTH SIDE OF CUNNINGHAM AVENUE

SCALE: 1"=20'

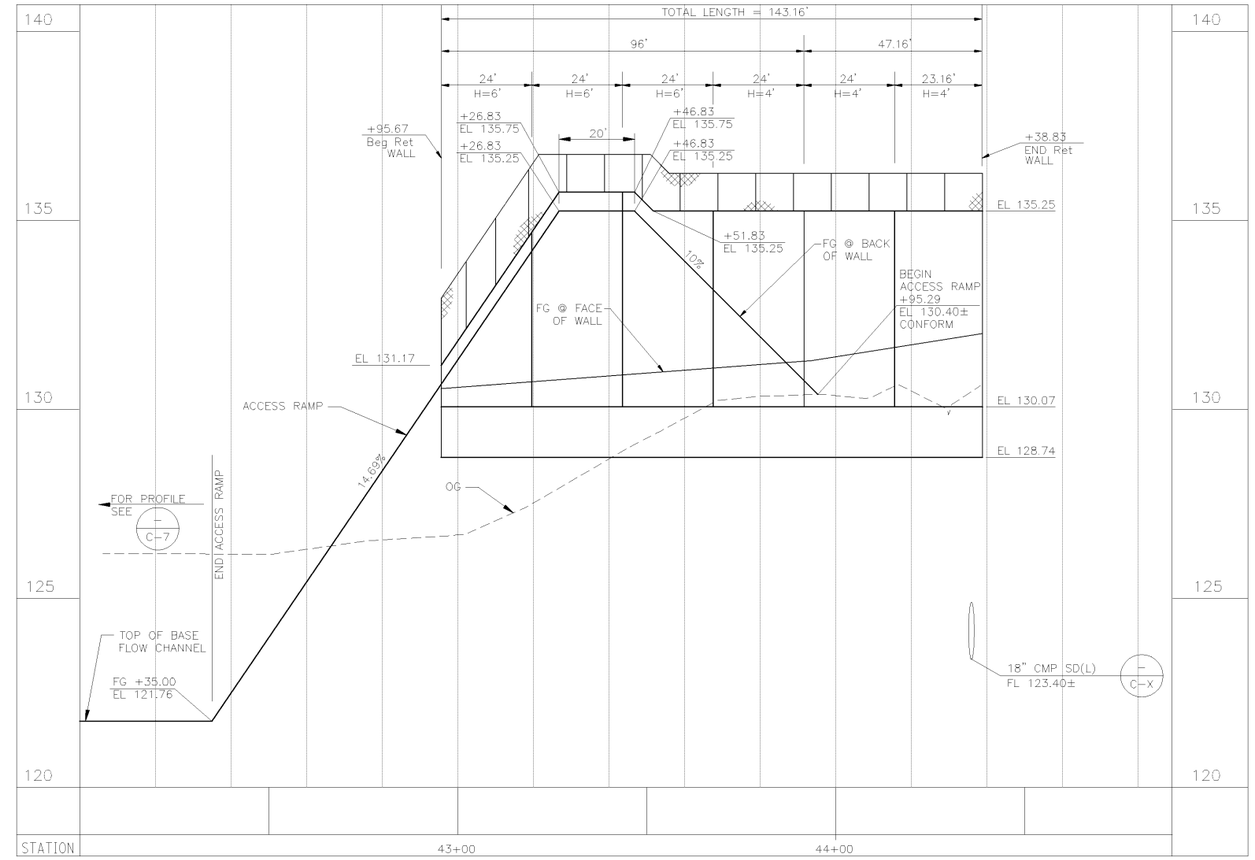

AR4 PROFILE

SCALE: HORIZ: 1"=20' VERT: 1"=2'

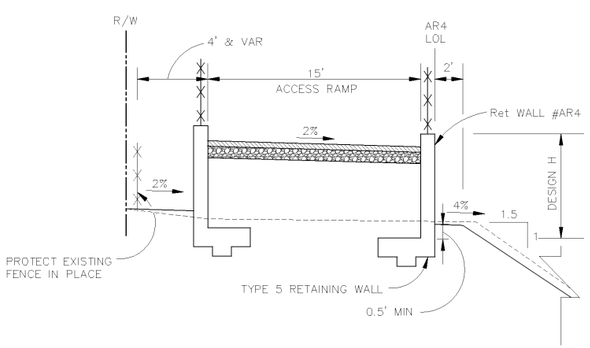

SECTION A – AR4 42+95.67 TO 44+38.83

SCALE: N.T.S.

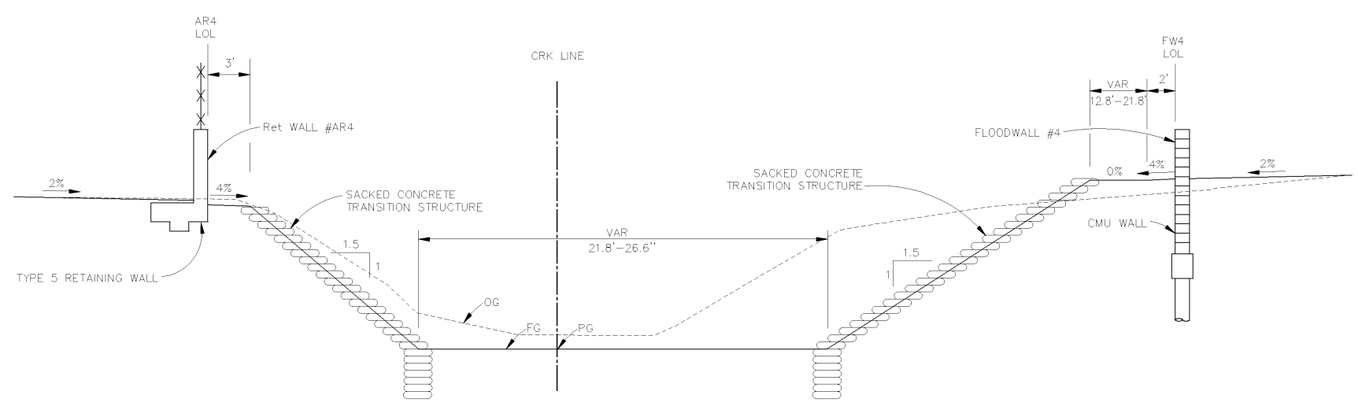

SECTION B – AR4 44+25.00 TO 44+33.61

SCALE: N.T.S.

REV	DESCRIPTION	DATE	APPR	REFERENCE INFORMATION AND NOTES

MARK THOMAS & COMPANY, INC.
1960 ZANKER ROAD
SAN JOSE, CA 95112

DATE 03/26/10
DESIGN BP
DRAWN AB
CHECKED AZ

REGISTERED PROFESSIONAL ENGINEER
JIMMY W. SIMS
No. 35458
Exp. 09/30/11
CIVIL
STATE OF CALIFORNIA

Santa Clara Valley Water District

ACCEPTED BY DISTRICT

PROJECT MANAGER DATE

PROJECT NAME AND SHEET DESCRIPTION:

FINAL DESIGN FOR LOWER SILVER CREEK
REACH 6B–MOSS POINT DRIVE TO
CUNNINGHAM AVENUE
CUNNINGHAM AVENUE NORTH ACCESS
RAMP AND CHANNEL TRANSITION

SCALE AS SHOWN

VERIFY SCALES 0 1"
BAR IS ONE INCH ON ORIGINAL DRAWING. IF NOT ONE INCH ON THIS SHEET, ADJUST SCALES ACCORDINGLY

PROJECT NUMBER 40264008

SHEET CODE: S–8

PAGE NUMBER: 38 OF 53

USERNAME: abarajas Mar 25, 2010–04:01:25pm
FILENAME:S5–S8 – Ramp & Transition Det.dwg

DOCUMENT NUMBER: LOS–CY–CD–4026–41835

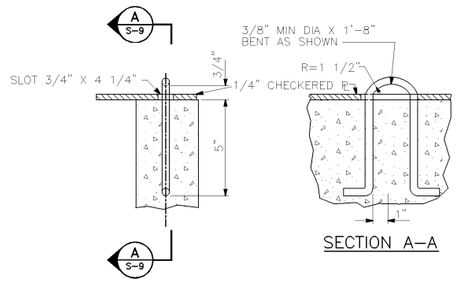

DETAIL 1 EYELET AT 200' INTERVALS
N.T.S

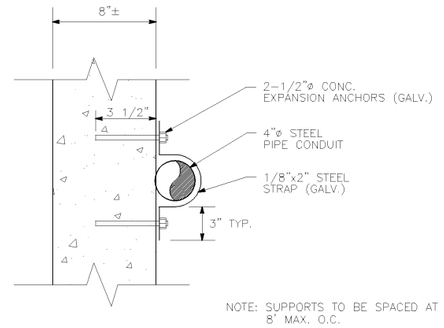

DETAIL 2 STEEL PIPE CONDUIT SUPPORT
N.T.S

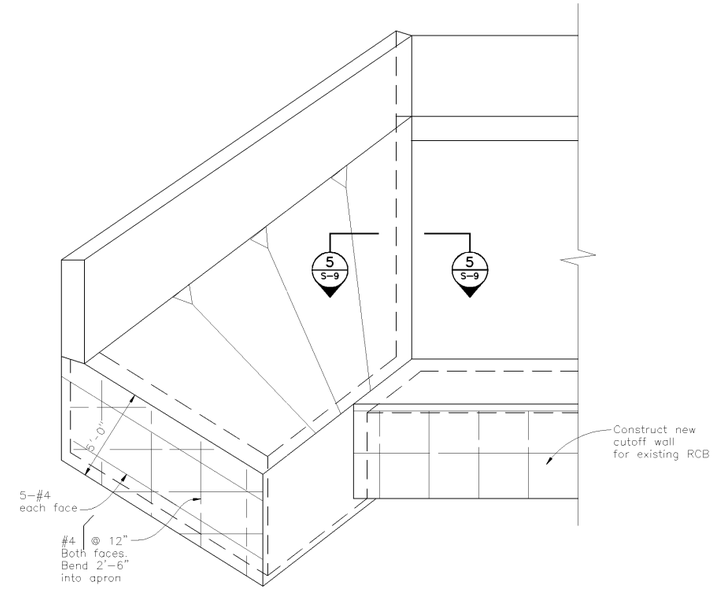

PERSPECTIVE 3 ELEVATION AT MOSS POINT DRIVE
N.T.S

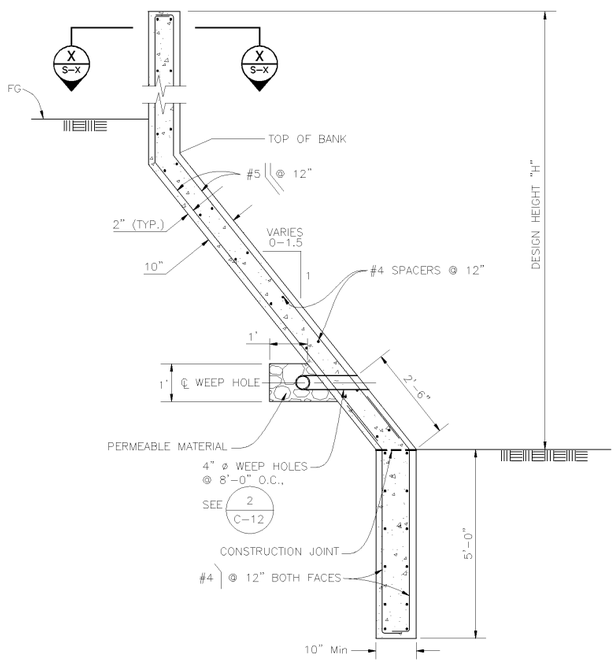

SECTION 4 APRON TYPICAL SECTION
N.T.S

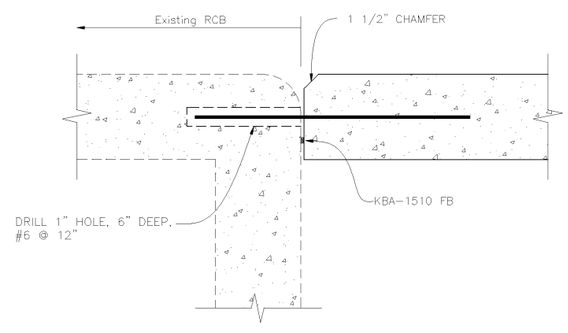

SECTION 5 CUT-OFF WALL
N.T.S

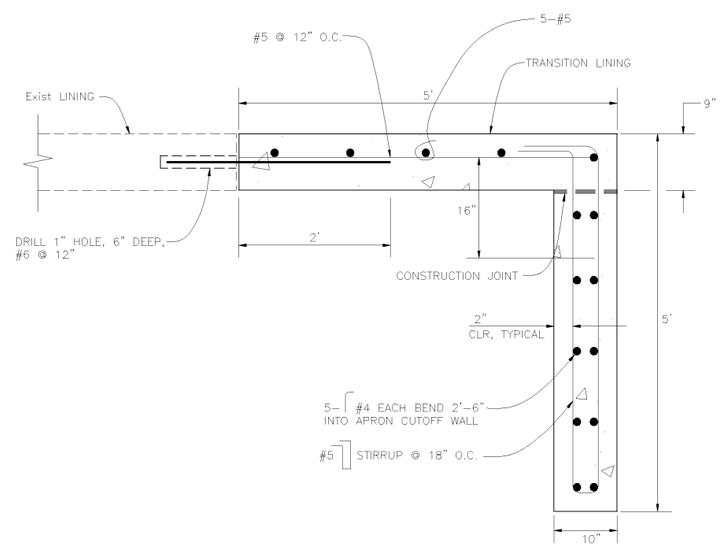

SECTION 6 CUT-OFF WALL AT MOSS POINT BOX CULVERT
N.T.S

REV	DESCRIPTION	DATE	APPR

REFERENCE INFORMATION AND NOTES
1. XXXX

MARK THOMAS & COMPANY, INC.
1960 ZANKER ROAD
SAN JOSE, CA 95112

DATE 03/26/10
DESIGN BP
DRAWN AB
CHECKED AZ

REGISTERED PROFESSIONAL ENGINEER
JIMMY W. SIMS
No. 35458
Exp. 09/30/11
CIVIL
STATE OF CALIFORNIA

Santa Clara Valley Water District

ACCEPTED BY DISTRICT

PROJECT MANAGER DATE

PROJECT NAME AND SHEET DESCRIPTION:
FINAL DESIGN FOR LOWER SILVER CREEK
REACH 6B-MOSS POINT DRIVE TO
CUNNINGHAM AVENUE
FLOODWALL AND RSP DETAILS

SCALE
NOT TO SCALE

VERIFY SCALES
0 1"
BAR IS ONE INCH ON ORIGINAL DRAWING IF NOT ONE INCH ON THIS SHEET, ADJUST SCALES ACCORDINGLY

PROJECT NUMBER
40264008

SHEET CODE:
S-9

PAGE NUMBER:
39 OF 53

USERNAME: abarajas Mar 25, 2010-03:12:15pm
FILENAME:S9-S11 - Floodwall & RSP Details.dwg
DOCUMENT NUMBER: LOS-CY-C-4026-41833

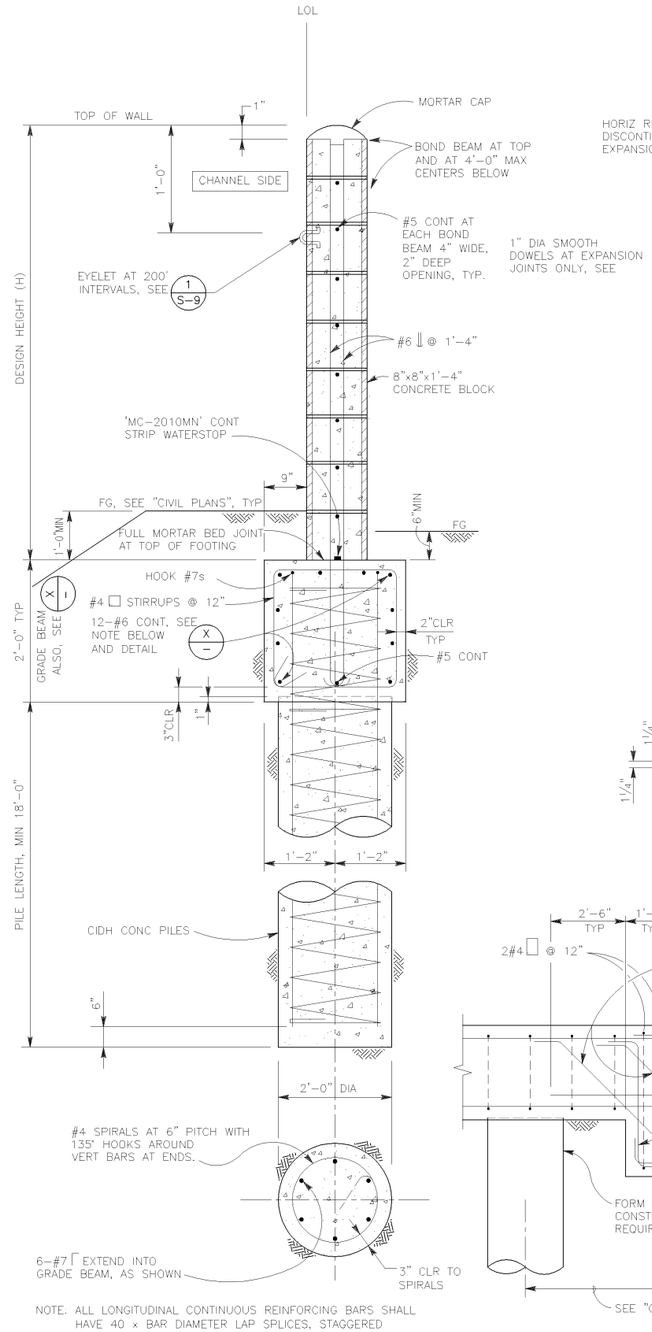

NOTE: ALL LONGITUDINAL CONTINUOUS REINFORCING BARS SHALL HAVE 40 x BAR DIAMETER LAP SPLICES, STAGGERED

DETAIL 1 (SCALE: 3/4"=1'-0") TYPICAL SECTION AT FLOOD WALL

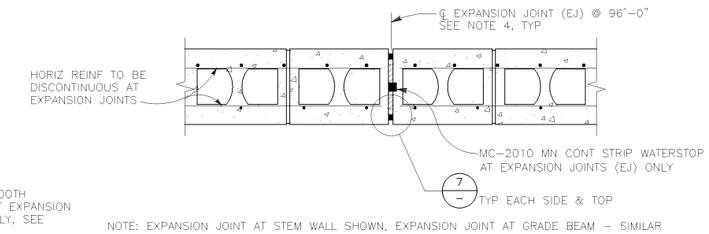

NOTE: EXPANSION JOINT AT STEM WALL SHOWN, EXPANSION JOINT AT GRADE BEAM – SIMILAR

DETAIL 8 (NO SCALE) EXPANSION JOINT (EJ) AT STEM & GR. BEAM

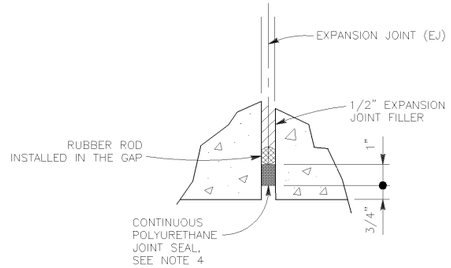

DETAIL 7 (NO SCALE) TYPICAL JOINT SEAL AT FLOOD WALL

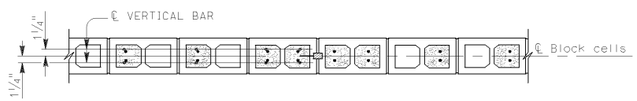

DETAIL 6 (NO SCALE) MASONRY BLOCK LAYOUT

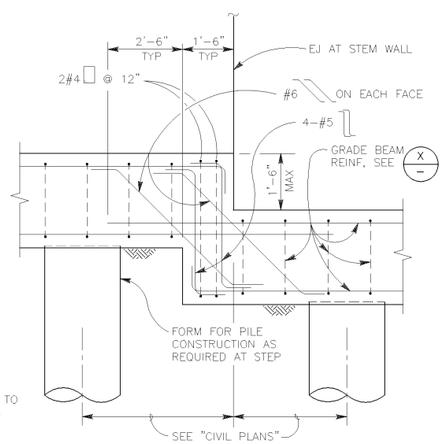

DETAIL 2 (NO SCALE) GRADE BEAM STEP AT FLOOD WALL

TYPE 5 RETAINING WALL

TABLE OF REINFORCING STEEL, DIMENSIONS AND DATA

Design H	4'	6'	8'
W	4'-0"	5'-0"	6'-6"
F Spread Footing	1'-4"	1'-4"	1'-6"
ⓐ bars, # @ in	#5 @ 16	#5 @ 16	#5 @ 8
ⓑ bars, # @ in	#5 @ 16	#5 @ 16	#5 @ 8

DETAIL 3 (NO SCALE) TYPE 5 RETAINING WALL DESIGN TABLE

NOTES:

1. FOR WATER PROOFING, "ADEKA ULTRA SEAL – STRIP WATERSTOP" PRODUCTS ARE SHOWN FOR UNIFORM BIDS. CONTRACTOR MAY SUBSTITUTE THEM WITH EQUAL OR BETTER PRODUCT. IN CASE OF SUBSTITUTION, CONTRACTOR SHALL SUBMIT ALL DOCUMENTATION NECESSARY TO PROVE THE PRODUCT EQUAL OR BETTER AND SHALL SUBMIT COMBINED WARRANTY BY THE MANUFACTURER AND THE CONTRACTOR ASSURING FULL WATERTIGHTNESS.
2. INSTALLATION OF STRIP WATERSTOP SHALL BE CONTINUOUS AS SHOWN ON PLANS AND AS PER PRODUCT MANUFACTURER'S RECOMMENDATIONS TO ENSURE FULL WATERTIGHTNESS.
3. UNLESS SHOWN OR NOTED ON THE PLANS, ALL JOINT FILLERS SHALL BE PRE-MOLDED ASPHALT IMPREGNATED JOINT FILLER MATERIAL, PRECUT PRECISELY FOR EACH LOCATION AND INSTALL AS SHOWN AND AS PER MANUFACTURER'S RECOMMENDATIONS.
4. JOINT SEALANT SHALL BE INSTALLED CONTINUOUS AT THE JOINTS AT TOP AND AT BOTH FACES OF THE WALLS. CLEAN CONCRETE SURFACES AND INSTALL SEALANT AS LATE AS PRACTICAL, PRIOR TO COMPLETION OF THE PROJECT.
5. HORIZONTAL JOINTS SHALL BE TOOLED CONCAVE OR MAY BE WEATHERED. VERTICAL JOINTS SHALL BE TOOLED CONCAVE OR MAY BE RAKED,

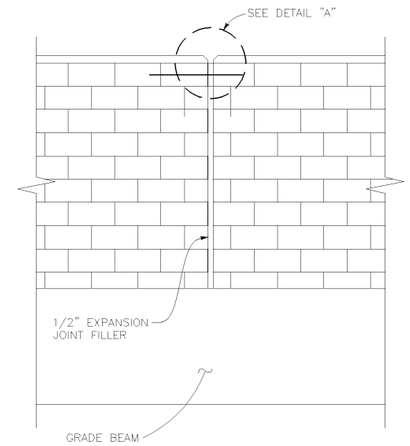

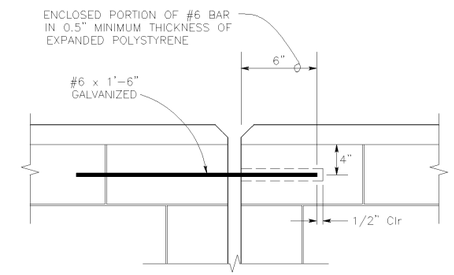

DETAIL A (NO SCALE)

DETAIL 9 (NO SCALE) WALL ELEVATION AT FLOOD WALL

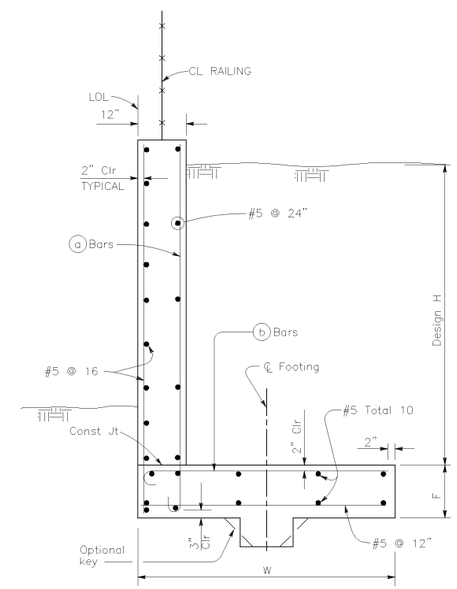

DETAIL 4 (NO SCALE) TYPE 5 RETAINING WALL

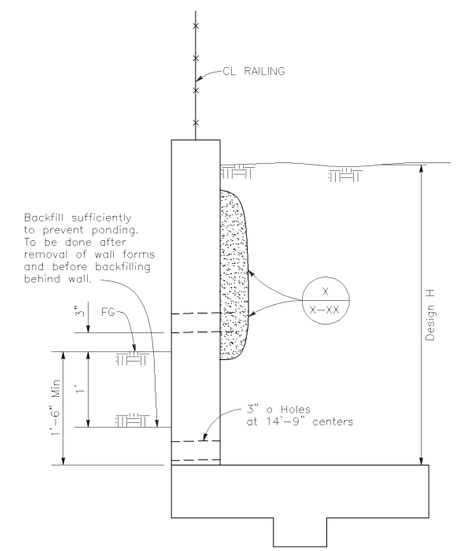

DETAIL 5 (NO SCALE) DRAINAGE AT RETAINING WALL

REV	DESCRIPTION	DATE	APPR

REFERENCE INFORMATION AND NOTES
1. XXXX

MARK THOMAS & COMPANY, INC.
1960 ZANKER ROAD
SAN JOSE, CA 95112

DATE 03/26/10
DESIGN BP
DRAWN AB
CHECKED AZ

REGISTERED PROFESSIONAL ENGINEER JIMMY W. SIMS No. 35458 Exp. 09/30/11 CIVIL STATE OF CALIFORNIA

Santa Clara Valley Water District

ACCEPTED BY DISTRICT
PROJECT MANAGER DATE

PROJECT NAME AND SHEET DESCRIPTION:
FINAL DESIGN FOR LOWER SILVER CREEK REACH 6B-MOSS POINT DRIVE TO CUNNINGHAM AVENUE
FLOODWALL AND RSP DETAILS

SCALE: NOT TO SCALE
VERIFY SCALES 0 1"
BAR IS ONE INCH ON ORIGINAL DRAWING. IF NOT ONE INCH ON THIS SHEET, ADJUST SCALES ACCORDINGLY

PROJECT NUMBER: 40264008
SHEET CODE: S-10
PAGE NUMBER: 40 OF 53

USERNAME: abarajas Mar 25, 2010-04:02:10pm
FILENAME:S9-S11 - Floodwall & RSP Details.dwg
DOCUMENT NUMBER: LOS-CY-C-4026-41833

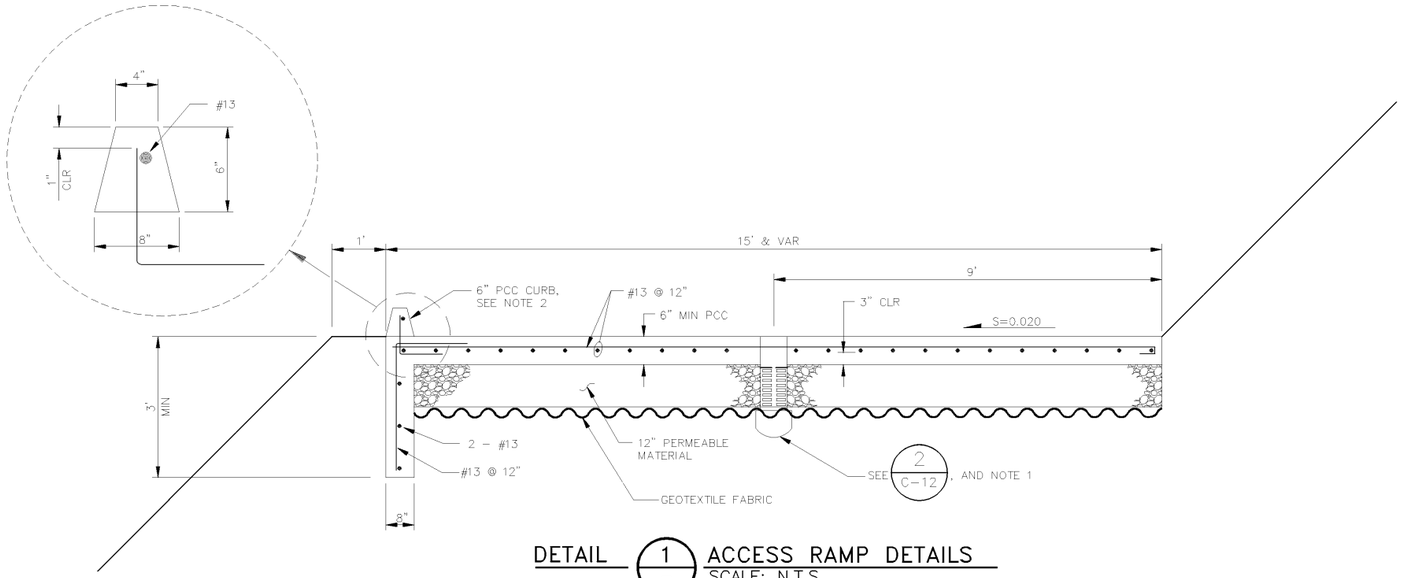

DETAIL 1/– ACCESS RAMP DETAILS
SCALE: N.T.S.

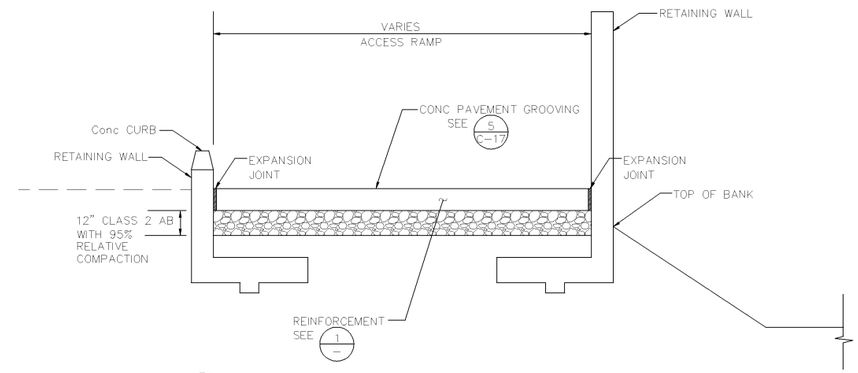

DETAIL 2/– ACCESS RAMP AT RETAINED SECTIONS
SCALE: N.T.S.

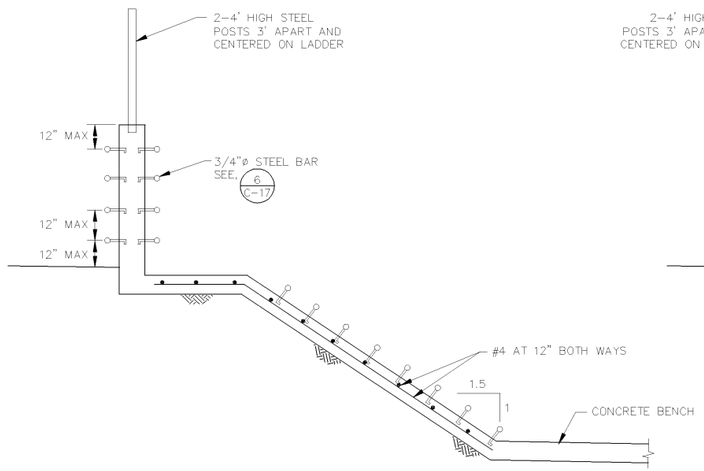

DETAIL 3/– ACCESS LADDER AT CONCRETE TRANSITION
N.T.S.

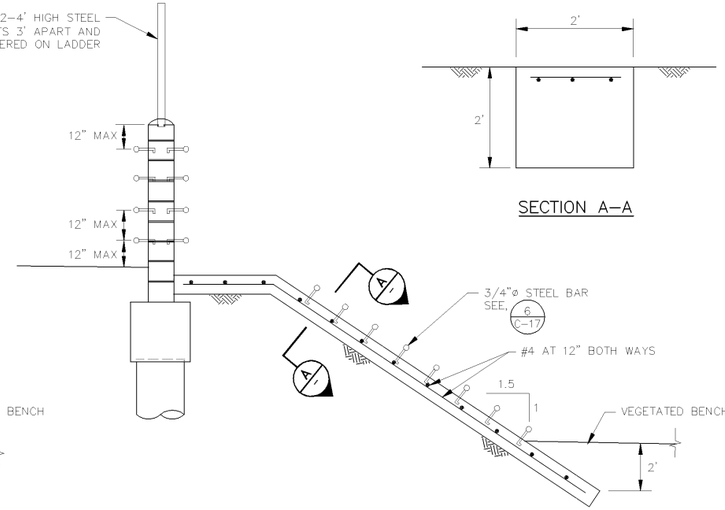

SECTION A–A

DETAIL 4/– ACCESS LADDER AT GRADED SURFACE
N.T.S.

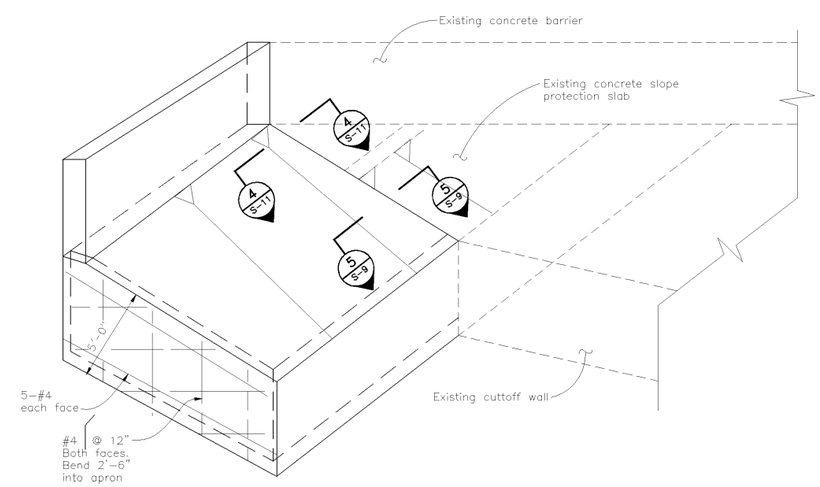

PERSPECTIVE 5/– SOUTH-WEST APRON ELEVATION AT OCALA AVE.
N.T.S
(OTHER THREE QUADRANTS SIMILAR)

REV	DESCRIPTION	DATE	APPR

REFERENCE INFORMATION AND NOTES
1. WEEP HOLE SHALL BE SPACED LONGITUDINALLY AT 12' O.C.
2. ALONG DEPRESSED MAINTENANCE ROADS (FLAT PROFILE), PCC CURB SHALL HAVE 6" GAPS @ 16' SPACINGS FOR DRAINAGE.

MARK THOMAS & COMPANY, INC.
1960 ZANKER ROAD
SAN JOSE, CA 95112

DATE 03/26/10
DESIGN BP
DRAWN AB
CHECKED AZ

REGISTERED PROFESSIONAL ENGINEER
JIMMY W. SIMS
No. 35458
Exp. 09/30/11
CIVIL
STATE OF CALIFORNIA

Santa Clara Valley Water District
ACCEPTED BY DISTRICT
PROJECT MANAGER DATE

PROJECT NAME AND SHEET DESCRIPTION:
FINAL DESIGN FOR LOWER SILVER CREEK REACH 6B–MOSS POINT DRIVE TO CUNNINGHAM AVENUE
FLOODWALL AND RSP DETAILS

SCALE: NOT TO SCALE
VERIFY SCALES 0 1"
BAR IS ONE INCH ON ORIGINAL DRAWING. IF NOT ONE INCH ON THIS SHEET, ADJUST SCALES ACCORDINGLY

PROJECT NUMBER 40264008
SHEET CODE: S-11
PAGE NUMBER: 41 OF 53

USERNAME: abarajas Mar 25, 2010-04:02:25pm
FILENAME:S9-S11 – Floodwall & RSP Details.dwg
DOCUMENT NUMBER: LOS-CY-C-4026-41833

USERNAME: rburnes Mar 24, 2010-03:28:29pm
FILENAME: 2010-03-23_LSC_3107.dwg

IRRIGATION NOTES:

1. THE DRAWINGS HAVE BEEN DESIGNED IN COMBINATION WITH A WRITTEN TECHNICAL SPECIFICATION BOOKLET. CONTRACTOR SHALL BE FAMILIAR WITH THESE DRAWINGS AND THE ASSOCIATED TECHNICAL SPECIFICATIONS BEFORE BEGINNING WORK.

2. THESE DRAWINGS ARE DIAGRAMMATIC. THE LOCATION OF THE POINT OF CONNECTION, ALL PIPING, VALVES, ETC. ARE DIAGRAMMATIC. EQUIPMENT SHOWN WITHIN ROADS OR PAVED AREAS IS FOR DESIGN CLARIFICATION ONLY. AVOID ANY CONFLICT BETWEEN THE IRRIGATION SYSTEM, PLANTING, AND ARCHITECTURAL OR ENGINEERING FEATURES.

3. DUE TO THE SCALE OF THE DRAWINGS, IT IS NOT POSSIBLE TO INDICATE ALL OFFSETS, FITTINGS, SLEEVES, ETC., WHICH MAY BE REQUIRED. THE CONTRACTOR SHALL CAREFULLY INVESTIGATE THE STRUCTURAL AND FINISHED CONDITIONS AFFECTING ALL OF THE WORK AND PLAN ACCORDINGLY, AND SHALL FURNISH MATERIAL REQUIRED TO MEET SUCH CONDITIONS.

4. THE IRRIGATION SYSTEM DESIGN IS BASED ON A STATIC WATER PRESSURE OF 65 PSI AT THE POINT OF CONNECTION. IRRIGATION MAXIMUM DEMAND IS 25 GPM. THE IRRIGATION CONTRACTOR SHALL VERIFY WATER PRESSURE PRIOR TO IRRIGATION SYSTEM INSTALLATION. ANY DIFFERENCES BETWEEN THE WATER PRESSURE INDICATED ABOVE AND THE ACTUAL PRESSURE READING AT THE POINT OF CONNECTION SHALL BE REPORTED TO THE PROJECT REPRESENTATIVE. CONTRACTOR SHALL AWAIT RECEIPT OF WRITTEN INSTRUCTIONS FROM THE PROJECT REPRESENTATIVE PRIOR TO PROCEEDING WITH CONSTRUCTION OF THE IRRIGATION SYSTEM.

5. IT IS THE RESPONSIBILITY OF THE IRRIGATION CONTRACTOR TO FAMILIARIZE THEMSELF WITH ALL GRADE DIFFERENCES, LOCATIONS OF WALLS, RETAINING WALLS, BRIDGES, CULVERTS, ETC. CONTRACTOR SHALL COORDINATE WORK TO BE DONE WITH THE GENERAL CONTRACTOR AND OTHER SUBCONTRACTORS FOR THE LOCATION AND INSTALLATION OF SLEEVES THROUGH WALLS, UNDER PAVING, STRUCTURES, BRIDGES, CULVERTS, ETC.

6. DO NOT WILLFULLY INSTALL THE IRRIGATION SYSTEMS AS SHOWN ON THE DRAWINGS WHEN IT IS OBVIOUS IN THE FIELD THAT OBSTRUCTIONS, GRADE DIFFERENCES, OR DIFFERENCES IN THE AREA DIMENSIONS EXIST. SUCH OBSTRUCTIONS, OR DIFFERENCES SHALL BE BROUGHT TO THE ATTENTION OF THE OWNER'S PROJECT REPRESENTATIVE. IN THE EVENT THAT THIS NOTIFICATION IS NOT PERFORMED, THE IRRIGATION CONTRACTOR SHALL ASSUME FULL RESPONSIBILITY FOR ANY REVISIONS NECESSARY.

IRRIGATION LEGEND

SYM	MANUFACTURER	MODEL NO.	DESCRIPTION
	GRISWOLD	2230L	MASTER VALVE
	RAINMASTER	FS 200	FLOW SENSOR
	IRRITROL	IBOC PLUS	CONTROLLER
	FEBCO	825Y BV	BACK FLOW PREVENTER
M	PROVIDED BY SAN JOSE WATER		METER
	RAINBIRD	44LRC	QUICK COUPLER VALVE ON MAINLINE
	RAINBIRD	44LRC	QUICK COUPLER VALVE ON LATERAL LINE (FOR USE DURING FORCE GERMINATION OF SEED)
	IRRITROL	700 SERIES	REMOTE CONTROL VALVE
	TORO	FB-25-PC	BUBBLER

MAINLINE
IRRIGATION ZONE
LATERAL LINE (RIGID PVC)
LATERAL LINE (3/4" FLEX HOSE)
LATERAL LINE (1/2" FLEX HOSE)
SLEEVE: GALVANIZED, ATTACH TO WALL OF BRIDGE
SLEEVE: PVC

X — VALVE NUMBER
X — VALVE SIZE
APPROXIMATE GALLONS PER MINUTE
VALVE SEQUENCE

IRRIGATION LATERAL LINE SIZING CHART

SIZE	MATERIAL	GPM
1/2"	IPS PVC FLEX HOSE	0-4
3/4"	IPS PVC FLEX HOSE	4-8
1"	SCH. 40 PVC	8-12
1 1/4"	SCH. 40 PVC	12-22
1 1/2"	CLASS 315 PVC	22-32

PRELIMINARY PLAN SET

NOT FOR CONSTRUCTION

REV	DESCRIPTION	DATE	APPR
	BASIS OF DESIGN SUBMITTAL	03/25/10	

REFERENCE INFORMATION AND NOTES

H. T. HARVEY & ASSOCIATES
ECOLOGICAL CONSULTANTS
H. T. HARVEY & ASSOCIATES
983 UNIVERSITY AVENUE, BLDG. D
LOS GATOS, CA 95032
PH. (408) 458-3200

DATE 03/25/10
DESIGN RB
DRAWN RB
CHECKED JH

Santa Clara Valley Water District
ACCEPTED BY DISTRICT
PROJECT MANAGER DATE

PROJECT NAME AND SHEET DESCRIPTION:
FINAL DESIGN FOR LOWER SILVER CREEK
REACH 6B-MOSS POINT DRIVE TO
CUNNINGHAM AVENUE
IRRIGATION NOTES
STA. 213+50 TO STA. 244+50

SCALE NO SCALE
VERIFY SCALES 0 1"
BAR IS ONE INCH ON ORIGINAL DRAWING IF NOT ONE INCH ON THIS SHEET, ADJUST SCALES ACCORDINGLY

PROJECT NUMBER 40264008
SHEET CODE: I-1
PAGE NUMBER: 42 OF 53

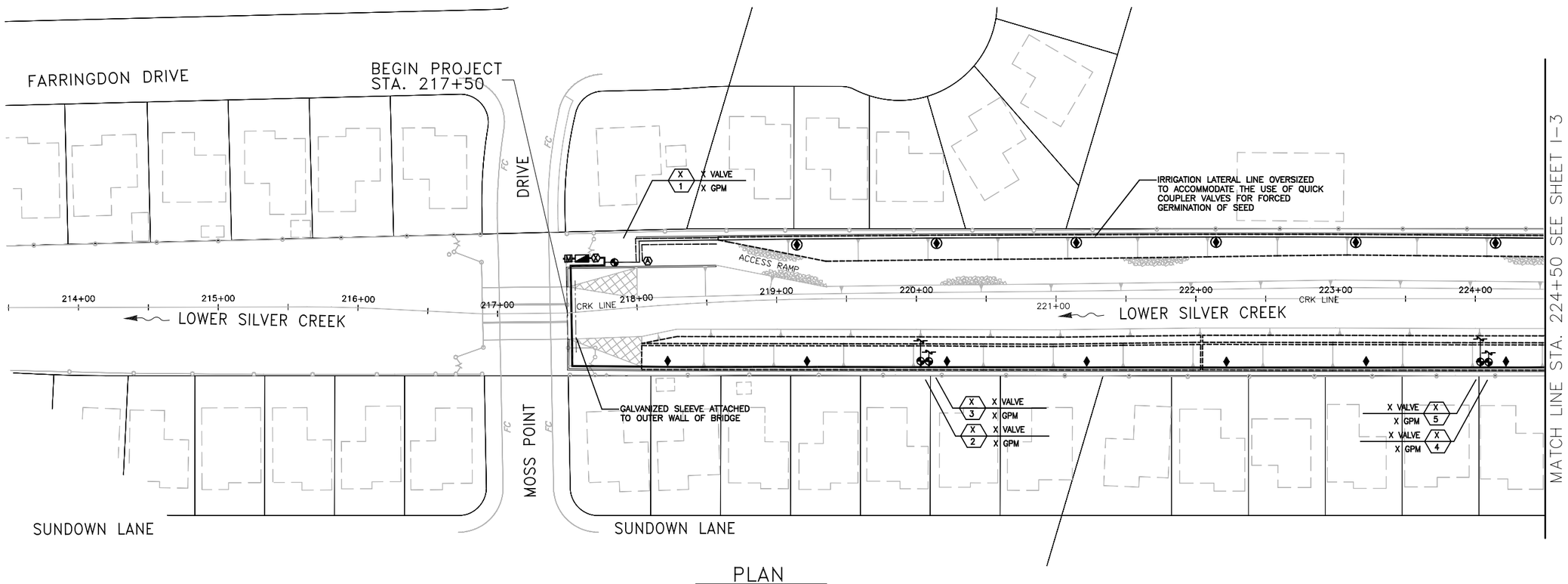

PLAN
SCALE: 1"=40'

PRELIMINARY PLAN SET

NOT FOR CONSTRUCTION

USERNAME: rburnes Mar 24, 2010-03:37:57pm
FILENAME: 2010-03-23_LSC_3107.dwg

REV	DESCRIPTION	DATE	APPR	REFERENCE INFORMATION AND NOTES
	BASIS OF DESIGN SUBMITTAL	03/25/10		

H. T. HARVEY & ASSOCIATES
ECOLOGICAL CONSULTANTS
H. T. HARVEY & ASSOCIATES
983 UNIVERSITY AVENUE, BLDG. D
LOS GATOS, CA 95032
PH. (408) 458-3200

DATE	03/25/10
DESIGN	RB
DRAWN	RB
CHECKED	JH

Santa Clara Valley Water District

ACCEPTED BY DISTRICT

PROJECT MANAGER DATE

PROJECT NAME AND SHEET DESCRIPTION:
FINAL DESIGN FOR LOWER SILVER CREEK
REACH 6B-MOSS POINT DRIVE TO
CUNNINGHAM AVENUE
IRRIGATION PLAN
STA. 213+50 TO STA. 224+50

SCALE
SCALE: 1"=40'

VERIFY SCALES
0 1"
BAR IS ONE INCH ON ORIGINAL DRAWING IF NOT ONE INCH ON THIS SHEET, ADJUST SCALES ACCORDINGLY

PROJECT NUMBER
40264008

SHEET CODE:
I-2

PAGE NUMBER:
43 OF 53

USERNAME: rburnes Mar 24, 2010-03:39:40pm
FILENAME: 2010-03-23_LSC_3107.dwg

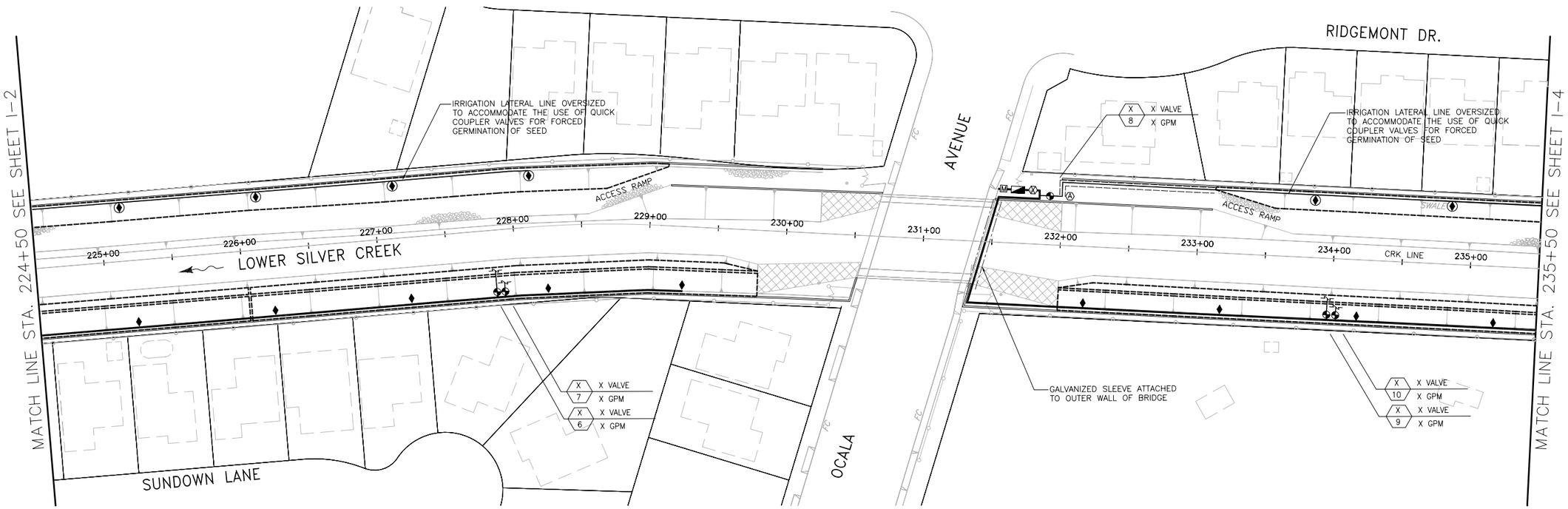

PLAN
SCALE: 1"=40'

PRELIMINARY PLAN SET
NOT FOR CONSTRUCTION

REV	DESCRIPTION	DATE	APPR	REFERENCE INFORMATION AND NOTES
	BASIS OF DESIGN SUBMITTAL	03/25/10		

H. T. HARVEY & ASSOCIATES
ECOLOGICAL CONSULTANTS
H. T. HARVEY & ASSOCIATES
983 UNIVERSITY AVENUE, BLDG. D
LOS GATOS, CA 95032
PH. (408) 458-3200

DATE	
03/25/10	
DESIGN	RB
DRAWN	RB
CHECKED	JH

Santa Clara Valley Water District
ACCEPTED BY DISTRICT
PROJECT MANAGER DATE

PROJECT NAME AND SHEET DESCRIPTION:
FINAL DESIGN FOR LOWER SILVER CREEK
REACH 6B-MOSS POINT DRIVE TO
CUNNINGHAM AVENUE
IRRIGATION PLAN
STA. 224+50 TO STA. 235+50

SCALE: SCALE: 1"=40'
VERIFY SCALES: 0 1"
BAR IS ONE INCH ON ORIGINAL DRAWING IF NOT ONE INCH ON THIS SHEET, ADJUST SCALES ACCORDINGLY

PROJECT NUMBER: 40264008
SHEET CODE: I-3
PAGE NUMBER: 44 OF 53

USERNAME: rburnes Mar 24, 2010-03:40:36pm
FILENAME: 2010-03-23_LSC_3107.dwg

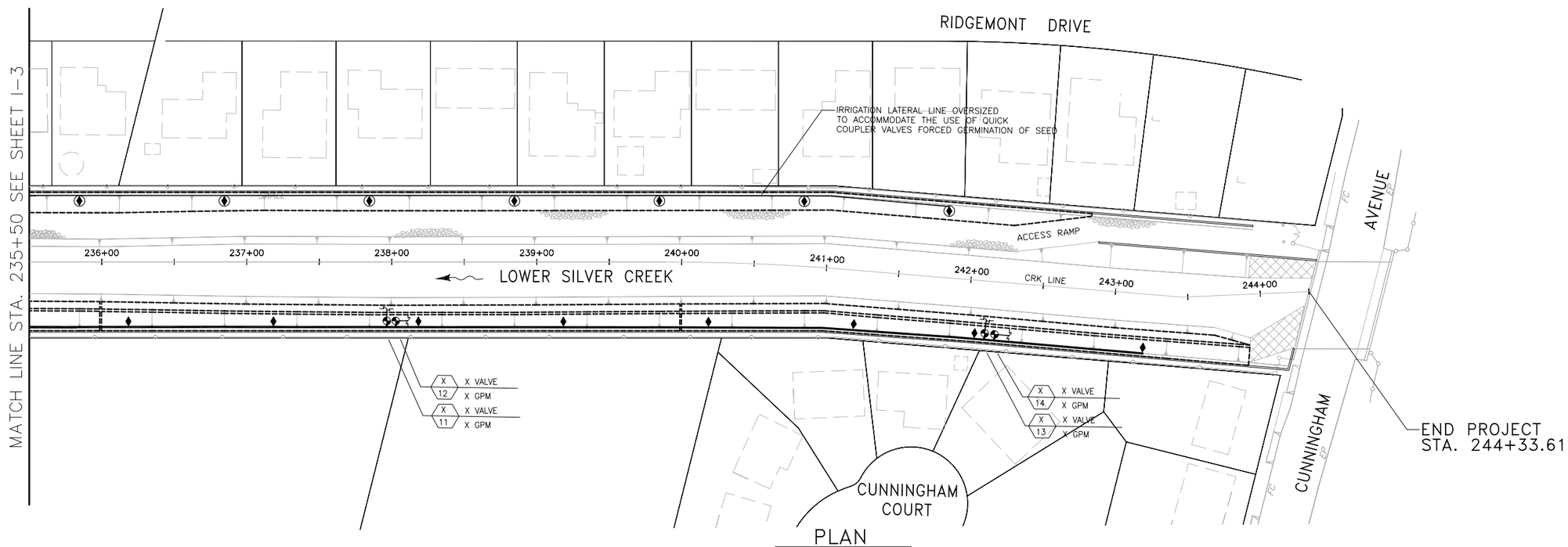

PLAN
SCALE: 1"=40'

PRELIMINARY PLAN SET

NOT FOR CONSTRUCTION

REV	DESCRIPTION	DATE	APPR	REFERENCE INFORMATION AND NOTES
	BASIS OF DESIGN SUBMITTAL	03/25/10		

H. T. HARVEY & ASSOCIATES
ECOLOGICAL CONSULTANTS
H. T. HARVEY & ASSOCIATES
983 UNIVERSITY AVENUE, BLDG. D
LOS GATOS, CA 95032
PH. (408) 458-3200

DATE	
03/25/10	
DESIGN RB	
DRAWN RB	
CHECKED JH	

Santa Clara Valley Water District

ACCEPTED BY DISTRICT

PROJECT MANAGER DATE

PROJECT NAME AND SHEET DESCRIPTION:
FINAL DESIGN FOR LOWER SILVER CREEK
REACH 6B-MOSS POINT DRIVE TO
CUNNINGHAM AVENUE
IRRIGATION PLAN
STA. 235+50 TO STA. 244+50

SCALE
SCALE: 1"=40'
VERIFY SCALES
0 1"
BAR IS ONE INCH ON ORIGINAL DRAWING IF NOT ONE INCH ON THIS SHEET, ADJUST SCALES ACCORDINGLY

PROJECT NUMBER
40264008

SHEET CODE:
I-4

PAGE NUMBER:
45 OF 53

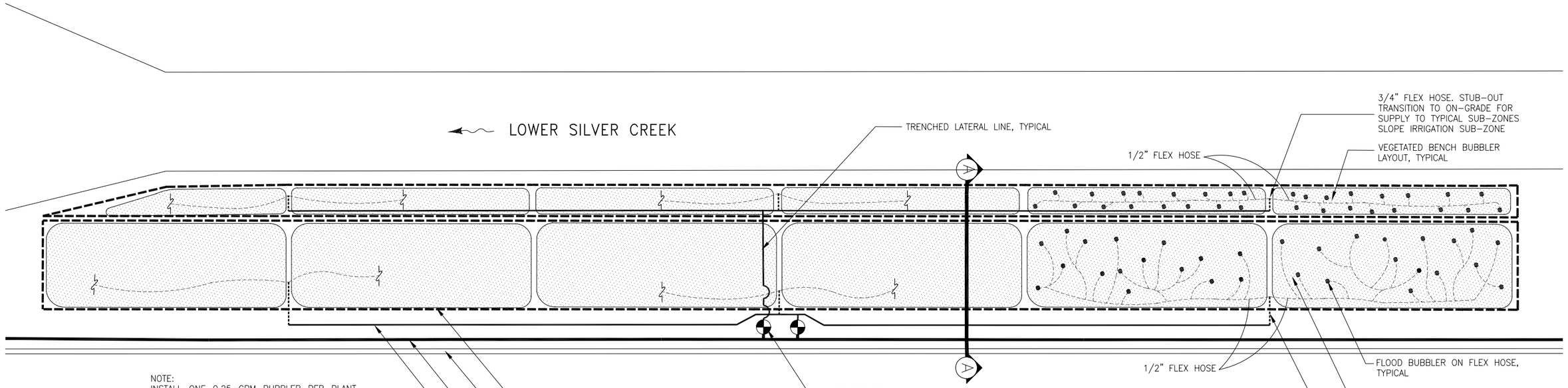

NOTE:
INSTALL ONE 0.25 GPM BUBBLER PER PLANT.
SIZE PIPE AS NEEDED SO AS NOT TO EXCEED
FLOW RATES INDICATED IN IRRIGATION LEGEND

PLAN
NTS

DETAIL 1 — CONCEPTUAL IRRIGATION LAYOUT

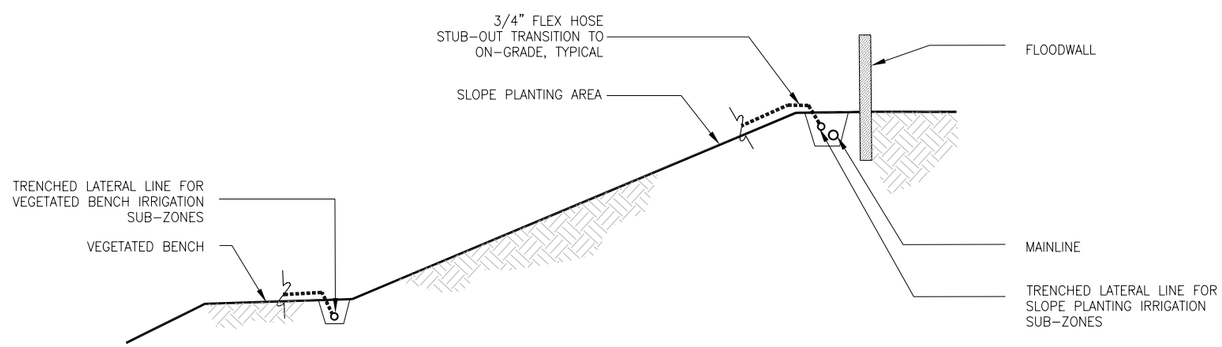

NOTE:
THIS SECTION IS DIAGRAMMATIC.
SCALES AND SYMBOLS HAVE BEEN
EXAGGERATED FOR GRAPHIC CLARITY

SECTION
NTS

SECTION A-A — CONCEPTUAL SLOPE SECTION

PRELIMINARY PLAN SET
NOT FOR CONSTRUCTION

USERNAME: rburnes Mar 24, 2010-03:41:06pm
FILENAME: 2010-03-23_LSC_3107.dwg

REV	DESCRIPTION	DATE	APPR
	BASIS OF DESIGN SUBMITTAL	03/25/10	

REFERENCE INFORMATION AND NOTES

H. T. HARVEY & ASSOCIATES
ECOLOGICAL CONSULTANTS
H. T. HARVEY & ASSOCIATES
983 UNIVERSITY AVENUE, BLDG. D
LOS GATOS, CA 95032
PH. (408) 458-3200

DATE 03/25/10
DESIGN RB
DRAWN RB
CHECKED JH

Santa Clara Valley Water District
ACCEPTED BY DISTRICT
PROJECT MANAGER DATE

PROJECT NAME AND SHEET DESCRIPTION:
FINAL DESIGN FOR LOWER SILVER CREEK
REACH 6B-MOSS POINT DRIVE TO
CUNNINGHAM AVENUE
IRRIGATION DETAILS

SCALE NTS
VERIFY SCALES 0 1"
BAR IS ONE INCH ON ORIGINAL DRAWING IF NOT ONE INCH ON THIS SHEET, ADJUST SCALES ACCORDINGLY

PROJECT NUMBER 40264008
SHEET CODE: I-5
PAGE NUMBER: 46 OF 53

NOTE:
NIPPLES AND FITTINGS TO BE SAME IPT SIZE AS BACKFLOW ASSEMBLY

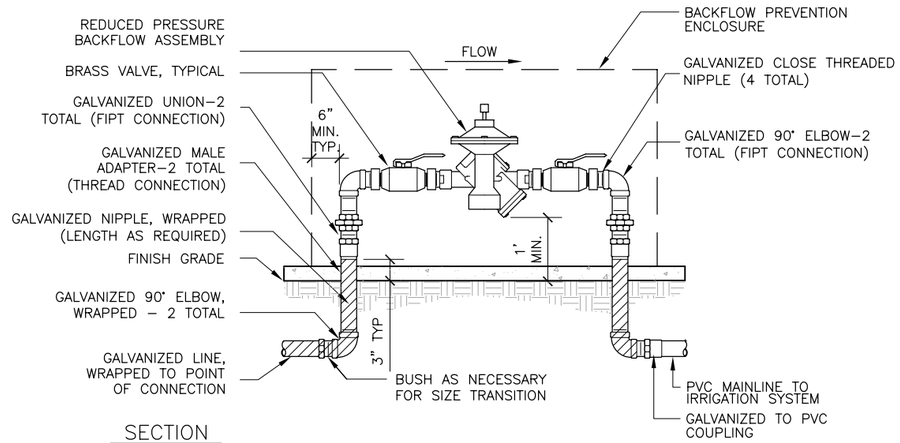

SECTION
NTS

DETAIL 1 – REDUCED PRESSURE BACKFLOW PREVENTER

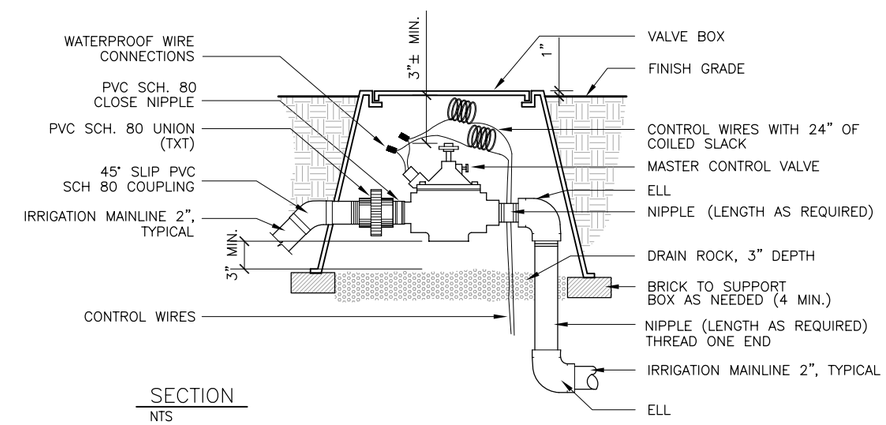

SECTION
NTS

DETAIL 3 – MASTER CONTROL VALVE

NOTE:
FLOW SENSOR CABLE MUST BE INSTALLED WITH INSERT (TOP) POSITIONED VERTICALLY AND BODY (TEE) POSITIONED HORIZONTALLY

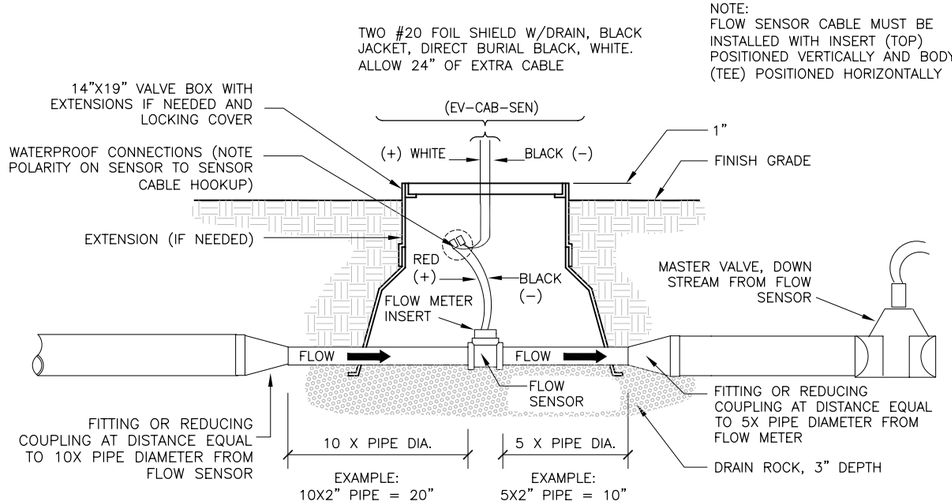

SECTION
NTS

DETAIL 2 – FLOW SENSOR

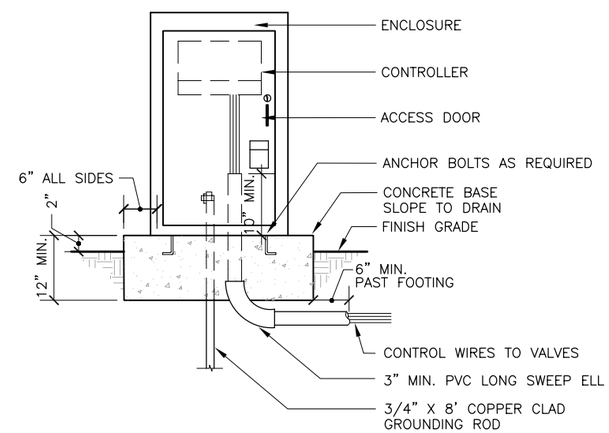

SECTION
NTS

DETAIL 4 – IRRIGATION CONTROLLER

PRELIMINARY PLAN SET

NOT FOR CONSTRUCTION

USERNAME: rburnes Mar 24, 2010–03:41:50pm
FILENAME: 2010–03–23_LSC_Details.dwg

REV	DESCRIPTION	DATE	APPR
	BASIS OF DESIGN SUBMITTAL	03/25/10	

REFERENCE INFORMATION AND NOTES

H. T. HARVEY & ASSOCIATES
ECOLOGICAL CONSULTANTS
H. T. HARVEY & ASSOCIATES
983 UNIVERSITY AVENUE, BLDG. D
LOS GATOS, CA 95032
PH. (408) 458–3200

DATE 03/25/10
DESIGN RB
DRAWN RB
CHECKED JH

Santa Clara Valley Water District
ACCEPTED BY DISTRICT

PROJECT NAME AND SHEET DESCRIPTION:
REACH 6B–MOSS POINT DRIVE TO CUNNINGHAM AVENUE
IRRIGATION DETAILS
K

SCALE NTS
VERIFY SCALES 0 1"
BAR IS ONE INCH ON ORIGINAL DRAWING IF NOT ONE INCH ON THIS SHEET, ADJUST SCALES ACCORDINGLY

PROJECT NUMBER 40264008
SHEET CODE: I–6
PAGE NUMBER: 47 OF 53

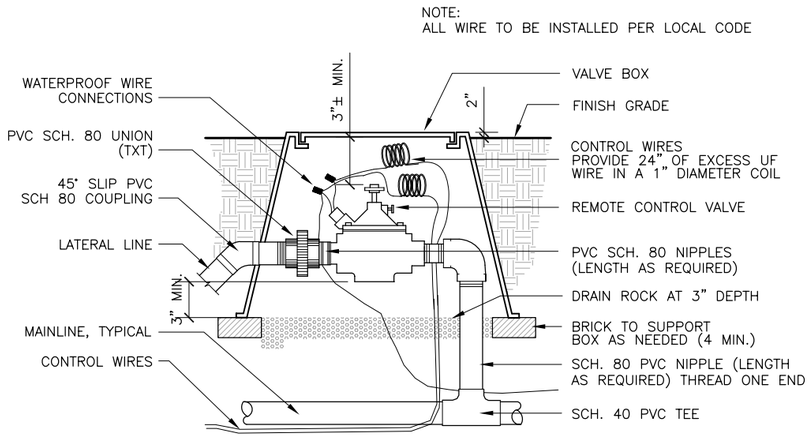

SECTION
NTS

DETAIL 1/– REMOTE CONTROL VALVE

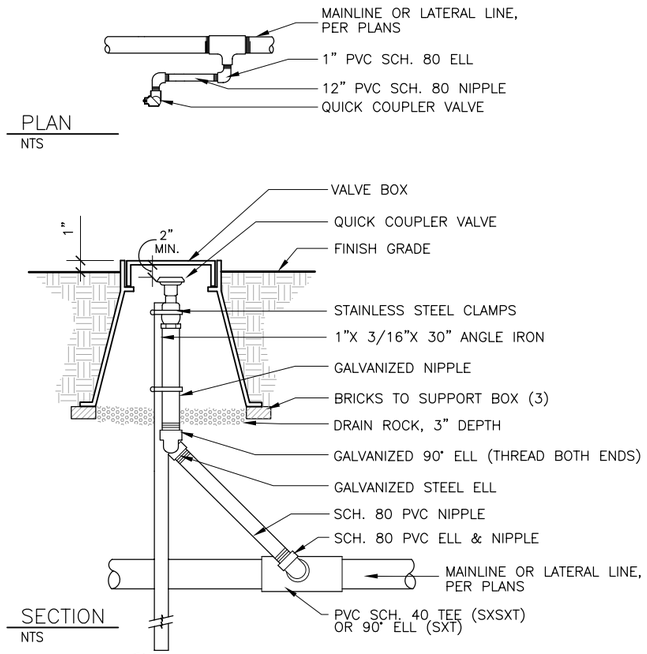

SECTION
NTS

DETAIL 3/– QUICK COUPLER VALVE FOR MAINLINE AND LATERAL LINE APPLICATION

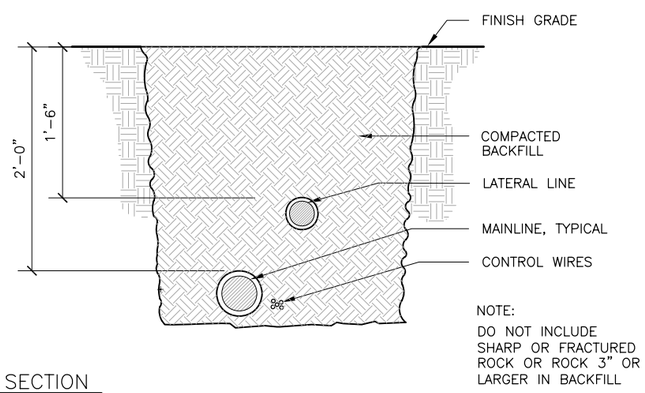

SECTION
NTS

DETAIL 2/– TRENCHED IRRIGATION LINES

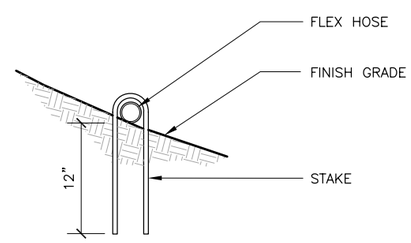

SECTION
NTS

DETAIL 4/– PIPE STAKE

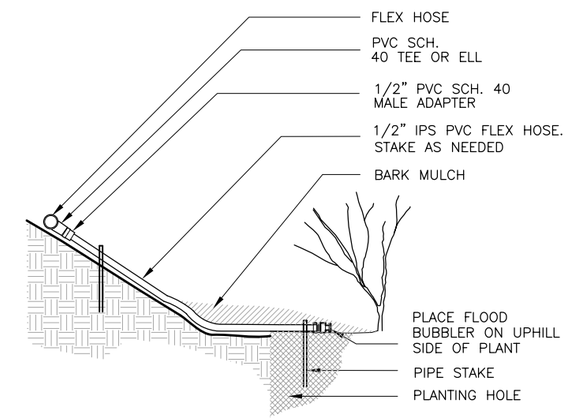

SECTION
NTS

DETAIL 5/– FLOOD BUBBLER ON FLEX HOSE

PRELIMINARY PLAN SET

NOT FOR CONSTRUCTION

USERNAME: rburnes Mar 24, 2010-03:42:48pm
FILENAME: 2010-03-23_LSC_Details.dwg

REV	DESCRIPTION	DATE	APPR	REFERENCE INFORMATION AND NOTES
	BASIS OF DESIGN SUBMITTAL	03/25/10		

H. T. HARVEY & ASSOCIATES
ECOLOGICAL CONSULTANTS
H. T. HARVEY & ASSOCIATES
983 UNIVERSITY AVENUE, BLDG. D
LOS GATOS, CA 95032
PH. (408) 458-3200

DATE 03/25/10
DESIGN RB
DRAWN RB
CHECKED JH

Santa Clara Valley Water District
ACCEPTED BY DISTRICT
PROJECT MANAGER DATE

PROJECT NAME AND SHEET DESCRIPTION:
FINAL DESIGN FOR LOWER SILVER CREEK
REACH 6B-MOSS POINT DRIVE TO
CUNNINGHAM AVENUE
IRRIGATION DETAILS

SCALE NTS
VERIFY SCALES 0 1"
BAR IS ONE INCH ON ORIGINAL DRAWING IF NOT ONE INCH ON THIS SHEET, ADJUST SCALES ACCORDINGLY

PROJECT NUMBER 40264008
SHEET CODE: I-7
PAGE NUMBER: 48 OF 53

USERNAME: rburnes Mar 24, 2010-03:43:24pm
FILENAME: 2010-03-23_LSC_3107.dwg

SLOPE REVEGETATION SCHEDULE

SYMBOL	BOTANICAL NAME	COMMON NAME	SIZE	APPROX. SPACING	FROM MOSS PT. DR.TO OCALA AVE.	FROM OCALA AVE. TO CUNNINGHAM AVE.	TOTAL PLANTS
	ACER NEGUNDO	BOX ELDER	–	–	–	–	–
	AESCULUS CALIFORNICA	CALIFORNIA BUCKEYE	–	–	–	–	–
	ARTEMESIA CALIFORNICA	CALIFORNIA SAGEBRUSH	–	–	–	–	–
	ARTEMESIA DOUGLASIANA	MUGWORT	–	–	–	–	–
	ASTER CHILENSIS	WESTERN ASTER	–	–	–	–	–
	BACCHARIS DOUGLASII	DOUGLAS' BACCHARIS	–	–	–	–	–
	BACCHARIS SALICIFOLIA	MULE FAT	–	–	–	–	–
	EUTHAMIA OCCIDENTALIS	WESTERN GOLDENROD	–	–	–	–	–
	LEYMUS TRITICOIDES	CREEPING WILD RYE	–	–	–	–	–
	PLATANUS RACEMOSA	CALIFORNIA SYCAMORE	–	–	–	–	–
	PRUNUS ILICIFOLIA	HOLLY-LEAF CHERRY	–	–	–	–	–
	QUERCUS AGRIFOLIA	COAST LIVE OAK	–	–	–	–	–
	QUERCUS LOBATA	VALLEY OAK	–	–	–	–	–
	RHAMNUS CALIFORNICA	COFFEEBERRY	–	–	–	–	–
	ROSA CALIFORNICA	CALIFORNIA ROSE	–	–	–	–	–
	RUBUS URSINUS	CALIFORNIA BLACKBERRY	–	–	–	–	–
	SAMBUCUS MEXICANA	BLUE ELDERBERRY	–	–	–	–	–
	SYMPHORICARPOS ALBUS	COMMON SNOWBERRY	–	–	–	–	–
	HYDROSEED MIX – INSTALL PER SPECIFICATIONS						

VEGETATED BENCH PLANTING SCHEDULE

SYMBOL	BOTANICAL NAME	COMMON NAME	SIZE	APPROX. SPACING	FROM MOSS PT. DR.TO OCALA AVE.	FROM OCALA AVE. TO CUNNINGHAM AVE.	TOTAL PLANTS
	ACER NEGUNDO	BOX ELDER	–	–	–	–	–
	ARTEMESIA DOUGLASIANA	MUGWORT	–	–	–	–	–
	BACCHARIS SALICIFOLIA	MULE FAT	–	–	–	–	–
	PLATANUS RACEMOSA	CALIFORNIA SYCAMORE	–	–	–	–	–
	POPULUS FREMONTII	FREMONT COTTONWOOD	–	–	–	–	–
	ROSA CALIFORNICA	CALIFORNIA ROSE	–	–	–	–	–
	SALIX EXIGUA	SANDBAR WILLOW	–	–	–	–	–
	SALIX LAEVIGATA	RED WILLOW	–	–	–	–	–
	SALIX LASIOLEPSIS	ARROYO WILLOW	–	–	–	–	–
	SYMPHORICARPOS ALBUS	COMMON SNOWBERRY	–	–	–	–	–
	HYDROSEED MIX – INSTALL PER SPECIFICATIONS						

EASTERN BANK TREE PLANTING

SYMBOL	BOTANICAL NAME	COMMON NAME	SIZE	APPROX. SPACING	FROM MOSS PT. DR.TO OCALA AVE.	FROM OCALA AVE. TO CUNNINGHAM AVE.	TOTAL PLANTS
	QUERCUS LOBATA	VALLEY OAK	–	–	–	–	–

WETLAND PLANTING SCHEDULE

SYMBOL	BOTANICAL NAME	COMMON NAME	SIZE	APPROX. SPACING	WESTERN BANK		EASTERN BANK		TOTAL PLANTS
					FROM MOSS PT. DR.TO OCALA AVE.	FROM OCALA AVE. TO CUNNINGHAM AVE.	FROM MOSS PT. DR.TO OCALA AVE.	FROM OCALA AVE. TO CUNNINGHAM AVE.	
	DISTICHLIS SPICATA	SALTGRASS	–	3 – 4 FT	–	–	–	–	–
	JUNCUS BALTICUS	BALTIC RUSH	–	3 – 4 FT	–	–	–	–	–
	JUNCUS MEXICANUS	MEXICAN RUSH	–	3 – 4 FT	–	–	–	–	–
	JUNCUS XIPHIOIDES	IRIS-LEAVED RUSH	–	3 – 4 FT	–	–	–	–	–

HYDROSEED ONLY

SYMBOL	BOTANICAL NAME	COMMON NAME	SIZE	APPROX. SPACING	WESTERN BANK		EASTERN BANK		TOTAL PLANTS
					FROM MOSS PT. DR.TO OCALA AVE.	FROM OCALA AVE. TO CUNNINGHAM AVE.	FROM MOSS PT. DR.TO OCALA AVE.	FROM OCALA AVE. TO CUNNINGHAM AVE.	
	HYDROSEED MIX – INSTALL PER SPECIFICATIONS								

PRELIMINARY PLAN SET

NOT FOR CONSTRUCTION

REV	DESCRIPTION	DATE	APPR
	BASIS OF DESIGN SUBMITTAL	03/25/10	

REFERENCE INFORMATION AND NOTES

H. T. HARVEY & ASSOCIATES
ECOLOGICAL CONSULTANTS
H. T. HARVEY & ASSOCIATES
983 UNIVERSITY AVENUE, BLDG. D
LOS GATOS, CA 95032
PH. (408) 458-3200

DATE 03/25/10
DESIGN RB
DRAWN RB
CHECKED JH

Santa Clara Valley Water District

ACCEPTED BY DISTRICT

PROJECT MANAGER DATE

PROJECT NAME AND SHEET DESCRIPTION:

FINAL DESIGN FOR LOWER SILVER CREEK REACH 6B-MOSS POINT DRIVE TO CUNNINGHAM AVENUE

PLANTING SCHEDULE & NOTES

SCALE NTS'

VERIFY SCALES 0 1"
BAR IS ONE INCH ON ORIGINAL DRAWING IF NOT ONE INCH ON THIS SHEET, ADJUST SCALES ACCORDINGLY

PROJECT NUMBER 40264008

SHEET CODE: L-1

PAGE NUMBER: 49 OF 53

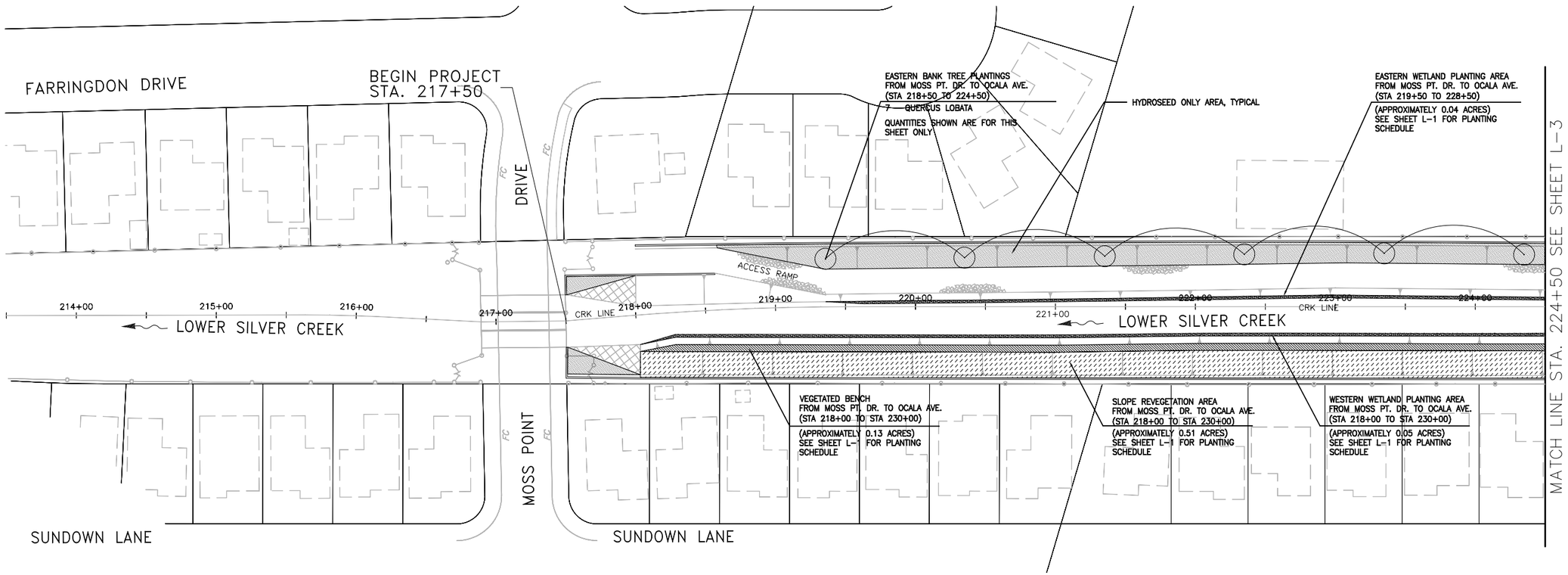

PLAN
SCALE: 1"=40'

PRELIMINARY PLAN SET

NOT FOR CONSTRUCTION

USERNAME: rburnes Mar 24, 2010-03:43:49pm
FILENAME: 2010-03-23_LSC_3107.dwg

REV	DESCRIPTION	DATE	APPR	REFERENCE INFORMATION AND NOTES
	BASIS OF DESIGN SUBMITTAL	03/25/10		

H. T. HARVEY & ASSOCIATES
ECOLOGICAL CONSULTANTS
H. T. HARVEY & ASSOCIATES
983 UNIVERSITY AVENUE, BLDG. D
LOS GATOS, CA 95032
PH. (408) 458-3200

DATE	03/25/10
DESIGN	RB
DRAWN	RB
CHECKED	JH

Santa Clara Valley Water District

ACCEPTED BY DISTRICT

PROJECT MANAGER DATE

PROJECT NAME AND SHEET DESCRIPTION:
FINAL DESIGN FOR LOWER SILVER CREEK
REACH 6B-MOSS POINT DRIVE TO
CUNNINGHAM AVENUE
PLANTING PLAN
STA. 213+50 TO STA. 224+50

SCALE
SCALE: 1"=40'

VERIFY SCALES
0 1"
BAR IS ONE INCH ON ORIGINAL DRAWING
IF NOT ONE INCH ON THIS SHEET, ADJUST SCALES ACCORDINGLY

PROJECT NUMBER
40264008

SHEET CODE:
L-2

PAGE NUMBER:
50 OF 53

USERNAME: rburnes Mar 24, 2010-03:44:49pm
FILENAME: 2010-03-23_LSC_3107.dwg

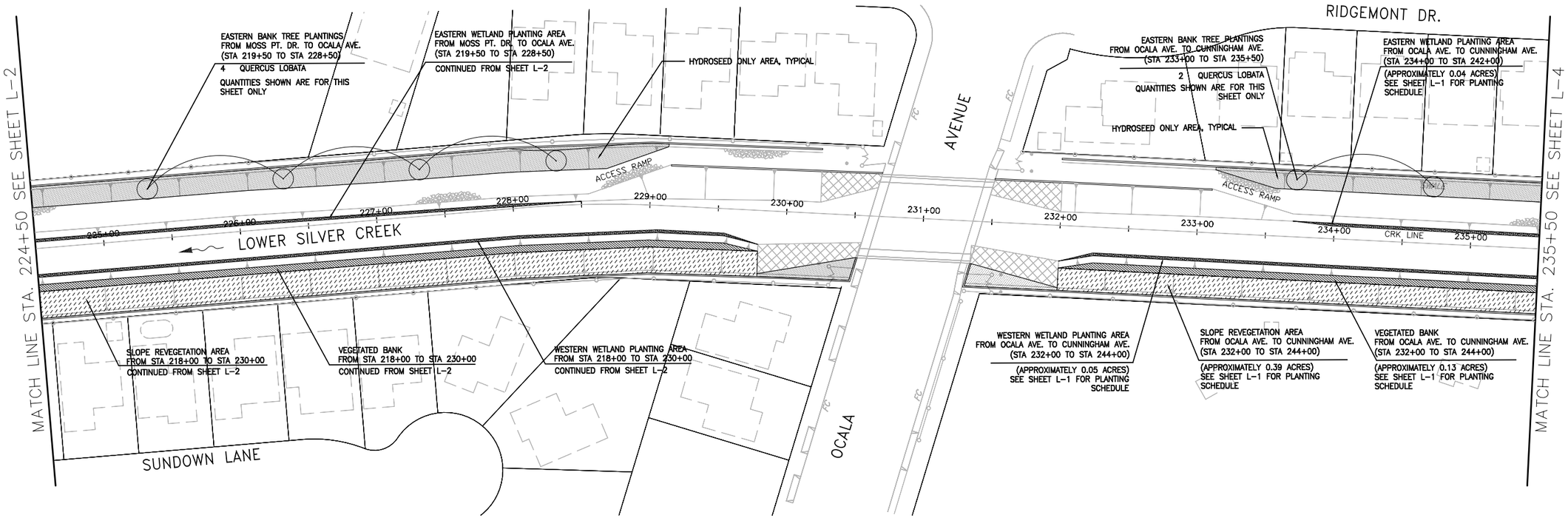

PLAN
SCALE: 1"=40'

PRELIMINARY PLAN SET
NOT FOR CONSTRUCTION

REV	DESCRIPTION	DATE	APPR
	BASIS OF DESIGN SUBMITTAL	03/25/10	

REFERENCE INFORMATION AND NOTES

H. T. HARVEY & ASSOCIATES
ECOLOGICAL CONSULTANTS
H. T. HARVEY & ASSOCIATES
983 UNIVERSITY AVENUE, BLDG. D
LOS GATOS, CA 95032
PH. (408) 458-3200

DATE	03/25/10
DESIGN	RB
DRAWN	RB
CHECKED	JH

Santa Clara Valley Water District
ACCEPTED BY DISTRICT
PROJECT MANAGER DATE

PROJECT NAME AND SHEET DESCRIPTION:
FINAL DESIGN FOR LOWER SILVER CREEK
REACH 6B-MOSS POINT DRIVE TO
CUNNINGHAM AVENUE
PLANTING PLAN
STA. 224+50 TO STA. 235+50

SCALE: SCALE: 1"=40'
VERIFY SCALES: 0 1"
BAR IS ONE INCH ON ORIGINAL DRAWING IF NOT ONE INCH ON THIS SHEET, ADJUST SCALES ACCORDINGLY

PROJECT NUMBER: 40264008
SHEET CODE: L-3
PAGE NUMBER: 51 OF 53

USERNAME: rburnes Mar 24, 2010-03:45:31pm
FILENAME: 2010-03-23_LSC_3107.dwg

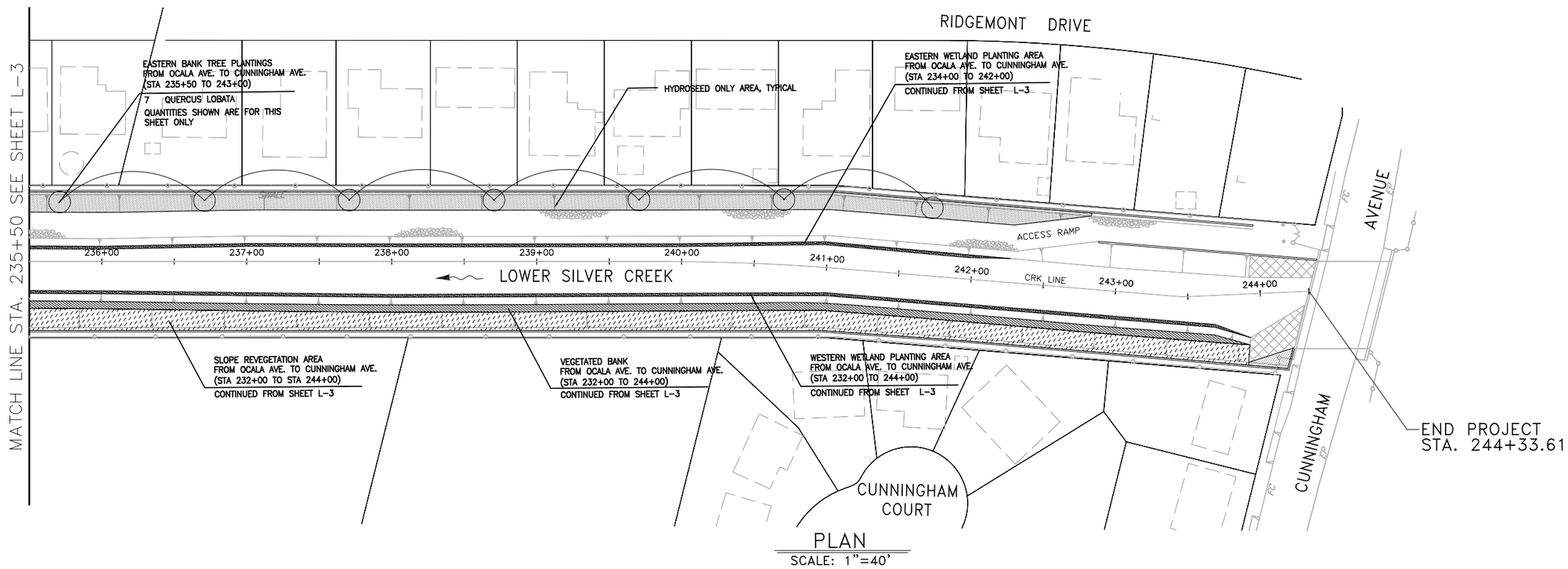

PLAN
SCALE: 1"=40'

PRELIMINARY PLAN SET
NOT FOR CONSTRUCTION

REV	DESCRIPTION	DATE	APPR
	BASIS OF DESIGN SUBMITTAL	03/25/10	

REFERENCE INFORMATION AND NOTES

H. T. HARVEY & ASSOCIATES
ECOLOGICAL CONSULTANTS
H. T. HARVEY & ASSOCIATES
983 UNIVERSITY AVENUE, BLDG. D
LOS GATOS, CA 95032
PH. (408) 458-3200

DATE 03/25/10
DESIGN RB
DRAWN RB
CHECKED JH

Santa Clara Valley Water District
ACCEPTED BY DISTRICT
PROJECT MANAGER DATE

PROJECT NAME AND SHEET DESCRIPTION:
FINAL DESIGN FOR LOWER SILVER CREEK
REACH 6B-MOSS POINT DRIVE TO
CUNNINGHAM AVENUE
PLANTING PLAN
STA. 235+50 TO STA. 244+50

SCALE
SCALE: 1"=40'
VERIFY SCALES
0 1"
BAR IS ONE INCH ON ORIGINAL DRAWING
IF NOT ONE INCH ON THIS SHEET, ADJUST SCALES ACCORDINGLY

PROJECT NUMBER
40264008
SHEET CODE:
L-4
PAGE NUMBER:
52 OF 53

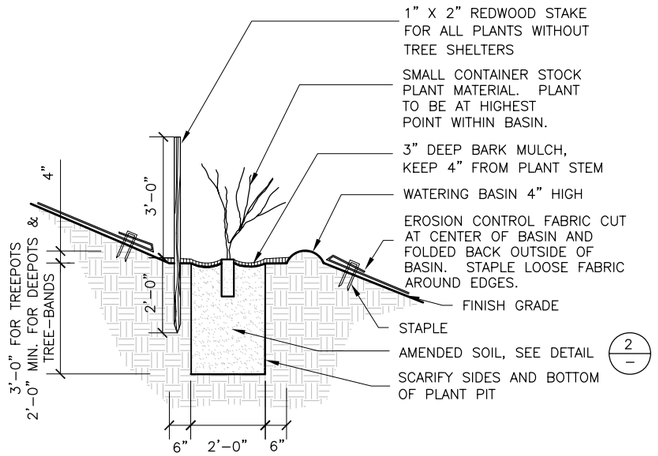

SECTION
NTS

DETAIL 1/– SMALL CONTAINER PLANTING

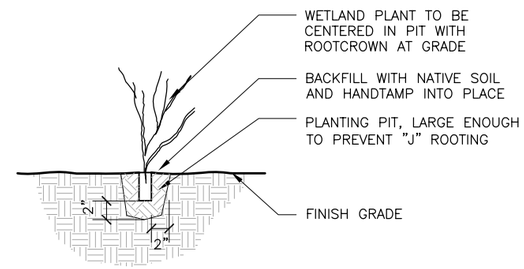

NOTE:
USE SPADE OR TROWEL TO DIG HOLE BY HAND

SECTION
NTS

DETAIL 3/– WETLAND PLUG PLANTING

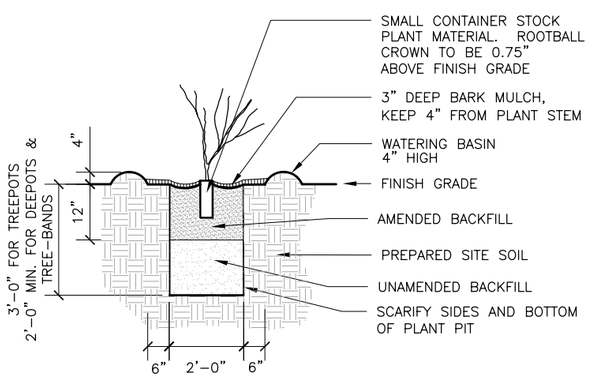

SECTION
NTS

DETAIL 2/– SOIL AMENDMENT

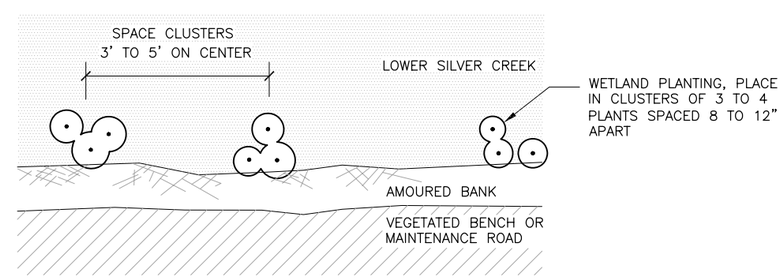

PLAN
NTS

DETAIL 4/– WETLAND CLUSTER PLANTING

PRELIMINARY PLAN SET

NOT FOR CONSTRUCTION

REV	DESCRIPTION	DATE	APPR
	BASIS OF DESIGN SUBMITTAL	03/25/10	

REFERENCE INFORMATION AND NOTES

H. T. HARVEY & ASSOCIATES
ECOLOGICAL CONSULTANTS
H. T. HARVEY & ASSOCIATES
983 UNIVERSITY AVENUE, BLDG. D
LOS GATOS, CA 95032
PH. (408) 458-3200

DATE	DESIGN	DRAWN	CHECKED
03/25/10	RB	RB	JH

Santa Clara Valley Water District
ACCEPTED BY DISTRICT
PROJECT MANAGER DATE

PROJECT NAME AND SHEET DESCRIPTION:
FINAL DESIGN FOR LOWER SILVER CREEK
REACH 6B-MOSS POINT DRIVE TO
CUNNINGHAM AVENUE
PLANTING DETAILS

SCALE: NTS
VERIFY SCALES 0 1"
BAR IS ONE INCH ON ORIGINAL DRAWING IF NOT ONE INCH ON THIS SHEET, ADJUST SCALES ACCORDINGLY

PROJECT NUMBER: 40264008
SHEET CODE: L-5
PAGE NUMBER: 53 OF 53

USERNAME: rburnes Mar 24, 2010-03:47:18pm
FILENAME: 2010-03-23_LSC_Details.dwg

APPENDIX 3C-7

60% ENGINEERING SPECS FOR REACH 6B

Santa Clara Valley Water District

OUTLINE SPECIFICATIONS

for

Lower Silver Creek – Reach 6B Final Design Project

(Moss Point Drive to Cunningham Avenue)

March 26, 2010

OUTLINE SPECIFICATIONS

STANDARD PROVISIONS

SECTION 1. DEFINITIONS .....

SECTION 2. INTERPRETATION OF CONTRACT .....

2.01. Precedence of Contract .....
2.02. Clarification of Contract .....
2.03. State Specifications and Plans .....

SECTION 3. PROPOSAL REQUIREMENTS AND CONDITIONS .....

3.01. Approximate Estimate .....
3.02. Examination of Drawings, Specifications, and Site of Work .....
3.03. Proposal Form .....
3.04. Queries on Bidding .....
3.05. Rejection of Proposals .....
3.06. Proposal Guarantee .....
3.07. Withdrawal of Proposals .....
3.08. Joint Proposals .....
3.09. Disqualification of Bidders .....
3.10. Addendum .....
3.11. Guaranty .....
3.12. Bid Protest .....

SECTION 4. AWARD OF CONTRACT .....

4.01. Award of Contract .....
4.02. Return of Bidder Security .....
4.03. Contract Bonds.....
4.04. Execution of Contract .....
4.05. Failure to Execute Contract .....

SECTION 5. SCOPE OF WORK .....

5.01. Work to be Done .....
5.02. Final Cleanup .....
5.03. Change in Work .....
5.03.01. Allowable Quantity Variations .....
5.04. Change in Contract Price .....
5.04.01. General .....
5.04.02. Cost of Work (Based on Time and Materials) .....
5.04.03. Special Services .....
5.04.04. Contractor's Fee .....
5.04.05. Compensation for Time Extensions .....
5.05. Change of Contract Time .....

OUTLINE SPECIFICATIONS

5.05.01. General .....
5.05.02. Extensions of Time for Delay Due to Excusable Inclement Weather .....
5.06. Changed Site Conditions .....
5.07. Cost Reduction Incentive .....
5.08. Disputes .....
5.08.01. Protest .....
5.08.02. Notice of Potential Claims .....
5.09. Claims .....
5.09.01. Claims Less Than Fifty Thousand Dollars .....
5.09.02. Claims From Fifty Thousand Dollars to Three Hundred and Seventy-Five Thousand Dollars .....
5.09.03. Informal Conferences .....
5.09.04. Civil Actions .....
5.10. Dispute Review Board (DRB) .....
5.10.01. General .....
5.10.02. DRB Qualifications .....
5.10.03. Establishment of the DRB .....
5.10.04. DRB Meetings .....
5.10.05. Dispute Resolution .....
5.11. Escrow Bid Documents .....
5.11.01. Introduction .....
5.11.02. Purpose .....
5.11.03. Format and Contents .....
5.11.04. Submittal .....
5.11.05. Storage .....
5.11.06. Examination .....
5.11.07. Final Deposition .....
5.12. Partnering .....
5.12.01. Partnering Relationship .....
5.12.02. Implementation .....
5.13. Dust Control .....
5.14. Excavation Safety Plans .....
5.15. Asbestos-Related Work .....
5.16. Substitutions .....

SECTION 6. LEGAL RELATIONS AND RESPONSIBILITY .....

6.01. Laws to be Observed.....
6.02 Equal Opportunity Requirements .....
6.03. Employment of Labor .....
6.04. Prevailing Wages .....
6.05. Hours of Labor.....
6.06. Apprentices .....
6.07. Permits and Licenses .....
6.08. Patents and Copyrights .....
6.09. Public Safety .....
6.10. Accident Prevention .....

OUTLINE SPECIFICATIONS

6.11. Explosives and Stream Pollution .....
6.12. Fires .....
6.13. Interference With Fire Hydrants, Highways, and Fences .....
6.14. Preservation of Property .....
6.15. Contractor's Responsibility for Work .....
6.16. Indemnification .....
6.17. Contractor's Insurance .....
6.17.01. General .....
6.17.02. Insurance on Work and Materials .....
6.18. Payment of Taxes .....
6.19. Cooperation With Others .....
6.20. Property Rights in Materials.....
6.21. Rights in Land and Improvements .....
6.22. Title to Materials Found on the Work .....
6.23. Trespass .....
6.24. Subcontracting .....
6.25. Tunnel Construction Safety .....
6.26. Assignment of Antitrust Claims .....
6.27. Burial Sites .....
6.28. Delay Due to Archeological Discovery .....
6.29. Noise Pollution and Vibration .....
6.30. Air Pollution .....
6.31. Spillage and Dust .....
6.32. Traffic Control .....
6.33. Water Quality .....
6.34. Regulated Material Management .....
6.34.01. Storage of Regulated Materials .....
6.34.02. Regulated Material Discharges or Releases .....
6.34.03. Hazardous Waste .....
6.35. Non-Regulated Materials .....
6.35.01. Disposal at Other Than State-Permitted Landfills .....
6.36. Imported Earthfill Material .....
6.37. Migratory Birds, Other Wildlife and Fish Species .....
6.38. Good Neighbor Requirements .....

SECTION 7. PROSECUTION AND PROGRESS OF WORK .....

7.01. Assignment .....
7.02. Notice to Begin Work .....
7.03. Commencement of Work .....
7.04. Work Progress Schedule .....
7.05. Temporary Suspension of Work .....
7.06. Liquidated Damages .....
7.07. Termination of Control .....
7.08. Termination of Contract .....
7.09. Contractor's Cost Data .....
7.10. Coordination With Utilities .....

OUTLINE SPECIFICATIONS

SECTION 8. MEASUREMENT AND PAYMENT .....

8.01. Measurement of Quantities .....
8.02. Deductions From Payments .....
8.03. Progress Payment .....
8.04. Final Payment .....
8.05. Scope of Payment .....
8.06. Acceptance of Final Payment Constitutes Release .....

SECTION 9. CONTROL OF WORK .....

9.01. Authority of Engineer .....
9.02. Submittals to be Furnished by the Contractor .....
9.02.01. Submittal Requirements .....
9.02.02. Submittal Review Procedures .....
9.03. Drawings and Data to be Furnished by the District .....
9.04. Superintendence .....
9.05. Character of Workers .....
9.06. Layout of Work and Surveys.....
9.07. Inspection .....
9.08. Defective and Unauthorized Works .....
9.09. Construction Equipment and Plant .....
9.10. Final Inspection and Acceptance of Work .....
9.11. Use Prior to Acceptance .....

SECTION 10. CONTROL OF MATERIALS AND INSTALLED EQUIPMENT .....

10.01. Furnishing and Quality of Materials and Equipment .....
10.02. Source of Materials and Equipment .....
10.03. Product Data and Samples .....
10.04. Storage of Materials and Equipment .....
10.05. Defective Materials .....
10.06. Trade Names and Alternatives .....
10.07. Testing Materials .....
10.08. Plant Inspection .....
10.09. District-Furnished Materials .....
10.10. Equal, Sole or Single Source, and Substitution .....

SPECIAIL PROVISIONS

SECTION 11. WORK AND SCHEDULE OF WORK .....

11.01. Summary of Work .....
11.02. Drawings .....
11.03. Site Maintenance and Clean-Up .....

OUTLINE SPECIFICATIONS

11.04. Time Allowance for Completion of Work .....
11.05. Excusable Inclement Weather Delays .....
11.06. Schedule of Work .....
11.06.01. Preliminary Schedule of Work .....
11.06.02. Detailed Schedule of Work .....
11.06.03. Payment .....
11.07. Liquidated Damages .....
11.08. Submittals and Withholding of Partial Payment .....
11.09. Fines .....
11.10. Bonus .....

SECTION 12. GENERAL REQUIREMENTS .....

12.01. Abbreviations and Acronyms .....
12.02. Definition of Key Terms .....
12.03. Site Investigation .....
12.04. District-Furnished Reports .....
12.04.01. Geotechnical Reports .....
Reference will be included at 90% submittal.
12.04.02. Environmental Report .....
To be provided by District.
12.04.03. Hazardous Materials Investigation Report .....
Reference will be included at 90% submittal.
12.04.04. Archeological Findings Report .....
To be provided by District.
12.04.05. As-Built Drawings .....
Reference to as-built drawings of the Moss Point Drive, Ocala Avenue, and Cunningham Avenue structures will be included at the 90% submittal.
12.05. Contractor's Engineering and Design .....
Temporary Water Diversion System.
12.05.01. Seismic Design Criteria .....
12.05.02. Wind Design Criteria .....
12.05.03. Hydraulic Design Criteria .....
12.05.04. Truck Loading .....

SECTION 13. SPECIAL REQUIREMENTS .....

13.01. Engineer .....
13.02. Project Signs .....
Project signs will be incorporated.
13.02.01. Payment .....
13.03. Office Facilities .....
13.03.01. Engineer's Office .....
Due to right of way limitation, no Engineer's Office requirements will be incorporated.
13.03.02. Contractor's Office .....

OUTLINE SPECIFICATIONS

Due to right of way limitation, no Contractor's Office requirements will be incorporated.
13.03.03. Removal and Disposal .....
13.03.04. Payment .....
13.04. Use of District Facilities .....
Use of District facilities will not be allowed.
13.05. Temporary Utilities .....
Electric power
Temporary Water
Temporary Sanitary Facilities
Solid and Liquid Waste Disposal
13.05.01. Payment .....
13.06. Staging Area .....
13.06.01. Payment .....
13.07. District Furnished Materials and Equipment .....
Sign panels
13.07.01. Assignment of Contract for District-Procured Materials .....
13.08. Salvaged Materials and Equipment .....
Chain link gates to be removes shall be salvaged.
~~13.09. Tools and Spare Parts~~ .....
~~13.10. Operation and Maintenance Documents~~ .....
~~13.10.01. Scope of Work~~ .....
~~13.10.02. Submittal Schedule~~ .....
~~13.10.03. Document Contents~~ .....
~~13.10.04. Document Format~~ .....
~~13.10.05. Equipment, Products, and Systems Requiring O&M Documents~~ .....
~~13.10.06. Payment~~ .....
~~13.10.07. Liquidated Damages~~ .....
~~13.10.08. Back Charges~~ .....
13.11. Maintenance of Record Documents .....
13.11.01. Record Drawings (Marked-Up Drawings) .....
13.12. Emergency Work .....
13.13. Dispute Review Board .....
District to confirm if this requirement is applicable.
13.14. Escrow Bid Documents .....
District to confirm if this requirement is applicable.
13.16. Insurance .....
13.16.01. Required Coverages .....
13.16.02. General Requirements .....

SECTION 14. GENERAL COORDINATION .....

14.01. Meeting Requirements .....
14.01.01. Preconstruction Meeting .....
14.01.02. Progress Meetings .....
14.01.03. Coordination and Special Meetings .....
~~14.02. Integration and Coordination With District Operations~~ .....

OUTLINE SPECIFICATIONS

~~14.02.01. Overview of Existing Systems and Facilities~~ .....
~~14.02.02. Requirements of an Operational Facility or System~~ .....
~~14.03. Coordination of Work Activities~~ .....
~~14.03.01. Work by Others~~ .....
~~14.03.02. Coordination With Others~~ .....
Unless otherwise indicated by District, no other activities by District or other contractors are assumed to occur during construction.
14.04. Construction Survey .....
Contractor needs to confirm flowlines elevations of the of the Moss Point Drive and Ocala Avenue structures after sediment removal.
14.05. Public Notification .....

SECTION 15. WORK CONSTRAINTS AND SITE RESTRICTIONS .....

15.01. General Work Constraints .....
15.02. Utilities .....
15.02.01. Utility Coordination .....
City of San Jose
PG& E Electric
15.02.02. Protection of Existing Utilities .....
15.02.03. Utility Installation/Relocation by Others .....
Guy wire relocation at Moss Point Drive.
15.03. Protection of Existing Improvements .....
Fences and gates.
15.03.01. Survey Monuments .....
15.04. Pre-Construction Surveys .....
15.04.01. Pre-Construction Survey Within the Project Limits .....
15.04.02. Surveys of Properties in the Vicinity of the Work .....
Discussion with District staff required to determine need and extent of surveys.
15.05. Rights of Way .....
15.05.01. District-Furnished Right of Way .....
15.05.02. Contractor-Furnished Right of Way .....
15.05.03. Temporary Construction Easement (TCE's) .....
No TCEs anticipated.
15.06. Access to Properties Owned by Others .....
15.07. Access to Job Site .....
15.08. Access Roads Within Job Site .....
15.09. District Use of Facilities/Premises Within the Work Area .....

SECTION 16. SAFETY AND SECURITY .....

16.01. Safety .....
16.01.01. Temporary Facilities .....
16.02. Safety and Health Program .....
16.02.01. Site-Specific Safety and Health Plan .....
16.02.02. Safety and Health Plan Implementation .....

OUTLINE SPECIFICATIONS

16.02.03. Submittals .....
~~16.03. Security Requirements at Job Site~~ .....
~~16.03.01. General~~ .....
~~16.03.02. Identification and Badging~~ .....
~~16.03.03. Background Checks~~ .....
~~16.03.04. Site Access Control~~ .....
~~16.03.05. Mail and Postal Deliveries to the Project Site~~ .....
~~16.03.06. Productivity Lost for Non-Compliance with Security Measures~~ .....
16.04. Payment .....

SECTION 17. PERMITS AND REGULATIONS .....

17.01. Permits and Agreements .....
17.01.01. District Obtained Permits .....
17.01.02. Contractor Obtained Permits .....
City of San Jose Haul Permit
17.01.03. Operation Regulations .....
17.02. Hours of Work .....
Work by Contractor - 8 am to 5 pm Monday through Friday.
Truck hauling - 9 am to 4 pm Monday through Friday.
17.03. Noise Pollution and Vibration .....
17.03.01. Noise .....
Weekdays: 7 a.m. to 7 p.m. 75 dBA
District to do Noise Monitoring?
17.03.02. Vibration Monitoring .....
17.04. Air Pollution .....
17.05. Spillage and Dust .....
17.06. Traffic Control .....
17.07. Truck Traffic and Hauling .....
17.07.01. Truck Arriving Early, Truck Idling and Queuing .....
17.08. Parking .....
17.09. Discovery of Archeological Artifacts and Human Remains .....
17.10. Aesthetic Requirements .....
17.11. Recreation .....
17.12. Utilities and Service System .....
17.13. Payment .....

SECTION 18. ENVIRONMENTAL .....

18.01. Water Quality .....
18.01.01. Discharges Covered Under NPDES General Permit .....
18.01.02. Other Discharge Permits .....
18.02. Compliance With NPDES General Permit *(Alternative 1)* **[Bid Item No. 1]**
18.02.01. General .....
18.02.02. Storm Water Pollution Prevention Plan .....
18.02.03. Implementation of BMPs .....
18.02.04. Monitoring and Reporting .....

OUTLINE SPECIFICATIONS

18.02.05. Regulatory Fines .....
18.02.06. Payment .....
~~18.03. Best Management Practices Action Plan *(Alternative 2)* .....~~
~~18.03.01. Submittal .....~~
~~18.03.02. Payment .....~~
18.04. Water Pollution Nuisance .....
18.05. Regulated Material Management .....
18.05.01. Asbestos Management .....
18.05.02. Lead Management .....
18.06. Solid Materials Management .....
18.06.01. Definitions .....
18.06.02. Construction and Demolition Waste Management .....
18.06.03. Post-Consumer Recycled Content Requirements .....
18.07. Migratory Birds .....
18.07.01. Regulatory Requirements .....
18.07.02. Scope of Work .....
18.07.03. Contractor Biologist .....
18.07.04. General Nesting Seasons .....
18.07.05. Migratory Bird Surveys .....
18.07.06. Protective Buffer Zones .....
18.07.07. Installation and Maintenance of Exclusion Devices .....
18.07.08. Vegetation Management for Nest Prevention .....
18.07.09. Monitoring .....
18.07.10. Submittals .....
18.07.11. Payment .....
18.08. Other Wildlife and Fish Species .....
18.09. Payment .....

SECTION 19. QUALITY ASSURANCE REQUIREMENTS .....

19.01. Submittal Procedures .....
19.01.01. General Requirements .....
19.01.02. Shop Drawings, Product Data, and Samples .....
19.02. Quality Control .....
19.02.01. Materials, Product, Equipment, and Workmanship .....
19.02.02. Inspection .....
19.02.03. Sampling of Materials .....
19.02.04. Testing Services .....
19.02.05. Testing by District .....
19.02.06. Plumbing and Piping Quality .....
19.02.07. Right of Rejection .....
19.02.08. Contractor’s Quality Assurance/Quality Control Requirements .....
19.03. Product Requirements .....
19.03.01. General Product Requirements .....
19.03.04. Transportation and Delivery .....
19.03.05. Storage and Protection .....

OUTLINE SPECIFICATIONS

SECTION 20. PAYMENT PROCEDURES .....

20.01. Schedule of Bid Items .....
20.01.01. General Requirements .....
20.01.02. Description of Bid Items .....
20.02. Progress Payments and Schedule of Values .....
20.02.01. Preparation .....
20.02.02. Submittals .....
20.02.03. Preliminary Schedule of Values .....
20.03. Cost Summaries .....
20.04. Partial Payment—Inclusion of Materials On-Site .....
20.05. Applications for Payment .....
20.05.01. General .....
20.05.02. Substantiating Data .....
20.05.03. Submittals .....

SECTION 21. CONTRACT CLOSEOUT .....

21.01. Project Completion and Acceptance .....
21.01.01. Use Before Acceptance .....
21.01.02. Contractor's Responsibility to Manage Incomplete and Deficient Work .....
21.01.03. Milestone Completion Preliminary Final Inspection .....
21.01.04. Milestone Completion Final Inspection .....
21.01.05. Project Completion .....
21.01.06. Acceptance of Work .....
21.02. Guaranty and Guaranty Bond .....
21.02.01. Guaranty .....
21.02.02. Guaranty Bond .....
21.03. Training .....
21.03.01. General Requirements .....
21.03.02. Submittals .....
21.04. Testing and Facility Startup .....
21.04.01. Testing and Startup Overview .....
21.04.02. Watertightness Testing .....
21.04.03. Operational Readiness Testing (ORT) .....
21.04.04. 3-Day Functional Testing (FT) .....
21.04.05. 7-Day System Commissioning Testing (SCT) .....
21.04.06. Submittals .....
21.05. Submission of Closeout Items .....
21.05.01. Record Drawings and Specifications .....
21.05.02. Closeout Documents .....
21.05.03. Keys .....
21.06. Final Cleaning .....
21.06.01. Schedule for Final Cleaning .....
21.06.02. Structures .....
21.06.03. Streets, Roadways, Concrete Slabs, Sidewalks, and Paved Areas .....
21.06.04. Storm Drainage Facilities .....

OUTLINE SPECIFICATIONS

21.06.05. Unpaved Areas .....

TECHNICAL PROVISIONS

SECTION 22. PREPARATORY WORK .....

22.01. Mobilization **[Bid Item No. 2]** .....
22.02. Clearing and Grubbing **[Bid Item No. 3]** .....
22.03. Sacked Concrete Structure Removal **[Bid Item No.4]** .....

SECTION 23. CONTROL OF WATER .....

23.01. Control of Water.....
23.02. Temporary Water Diversion **[Bid Item No. 5]** .....

SECTION 24. EARTHWORK .....

24.01. Channel Excavation **[Bid Item No.6]** .....
24.02. Structural Excavation.....
24.02.01. Structure Excavation (Grade Beam) **[Bid Item No. 7]**……
24.02.02. Structure Excavation (Retaining Wall) **[Bid Item No. 8]**……
24.02.03. Structure Excavation (Channel Lining) **[Bid Item No. 9]**……
24.03. Structural Backfill.....
24.03.01. Structural Backfill (Grade Beam) **[Bid Item No. 10]**…… ...
24.03.02. Structural Backfill (Retaining Wall) **[Bid Item No. 11]**……
24.03.03. Structural Backfill (Channel Lining) **[Bid Item No. 12]**……
24.04. Unsuitable Material.....
24.05. Permeable Material **[Bid Item No. 13]** .....
24.06. Bedding Material **[Bid Item No. 14]**.....……
24.07. Decomposed Granite **[Bid Item No. 15]**……
24.08. Armoring Aggregate **[Bid Item No. 16]**……
24.09. Geotextile Fabric **[Bid Item No. 17]** .....
24.10. Shoring .....

SECTION 25. EROSION CONTROL.....

25.01. Hydroseeding **[Bid Item No. 18]**……..
25.02. Rolled Erosion Control Blanket **[Bid Item No. 19]** .....

SECTION 26. Quarter-Ton Rock.....

26.01. Rock Lining **[Bid Item No. 20]**.....
26.02. Grouted Rock Lining **[Bid Item No. 21]**.....

OUTLINE SPECIFICATIONS

SECTION 27. STORM DRAINS .....

27.01. Storm Drain Outfall Modifications **[Bid Item No. 22]**….. .....

SECTION 28. FENCING AND GATES.....

28.01. Chain Link Fence Removal **[Bid Item No. 23]**……
Gate Removal **[Bid Item No. 24]** .....
28.02. Chain Link Fence (Type CL-6) **[Bid Item No. 25]** .....
28.03. Five-Foot Single Swing CL-6 Gate **[Bid Item No. 26]**.....

SECTION 29. TRAFFIC CONTROL.....

29.01. Traffic Control on Moss Point Drive, Ocala Drive and Cunningham Avenue **[Bid Item No. 27]** .....

SECTION 30. CONCRETE .....

30.01. Structural Concrete.....
30.01.01. Structural Concrete (Grade Beam) **[Bid Item No. 28]**……..
30.01.02. Structural Concrete (Retaining Wall) **[Bid Item No. 29]**……..
30.01.03. Structural Concrete (Access Ramp) **[Bid Item No. 30]**……..
30.01.04. Structural Concrete (Channel Lining) **[Bid Item No. 31]**……
30.01.05. Expansion Joints.....
30.02. Piling **[Bid Item No. 32]**……

SECTION 31. SPECIAL STRUCTURES.....

31.01. CMU Floodwalls **[Bid Item No. 33]**….....
31.03. Sacked Concrete **[Bid Item No. 34]**…….

SECTION 32. IRRIGATION **[Bid Item No. 35]** .....
32.01. Water Meter
32.02. Mounted Battery Operated Controller Assembly .....
32.03. Reduced Pressure Backflow Preventer and Enclosure
32.04. Valve Boxes
32.05. Master Valve and Flow Sensor
32.06. Remote Control Valves
32.07. Quick Coupler Valves
32.08. Wire
32.09. Mainline
32.10. Trenched Lateral Lines
32.11. Sleeves –Trenched Under Roads and Walls
32.12. Sleeves – Above Grade Attached to Structure
32.13. On Grade Bubbler System
32.14. As-built Drawings

OUTLINE SPECIFICATIONS

SECTION 33. REVEGETATION **[Bid Item No. 36]** .....

33.01. Revegetation Soil Preparation
33.02. Native Hydroseeding .....
33.03. Hole Auguring / Backfill and Amendment
33.04. Mulch .....
33.05. Planting - Live Cuttings / Direct Seeding .....
33.06. Planting – Large Container Material .....
33.07. Planting – Wetland Plugs.....
33.08. Plant Staking

SECTION 34. PLANT ESTABLISHMENT PERIOD **[Bid Item No. 37]** .....

34.01. Weed Control
34.02. Irrigation.....
34.03. Basin Maintenance .....
34.04. Replacement Planting.....
34.05. Maintenance Log Book .....
34.06. Monthly inspections .....

APPENDIX 3D-1

404 PERMIT - USACE

Avg area = 300 + 250 + 350 + 400 ÷ 4 = 325 ft²

Reach 4 compared to "Alt 4, Sect 3"

STA: 130+00 140+00 153+00 164+00

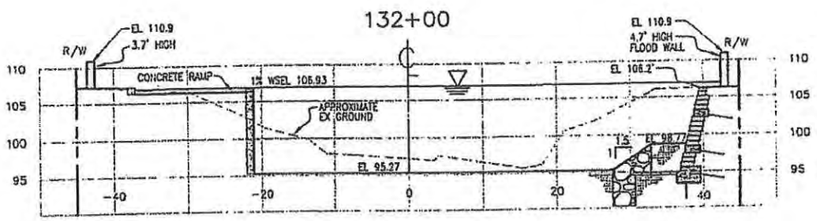

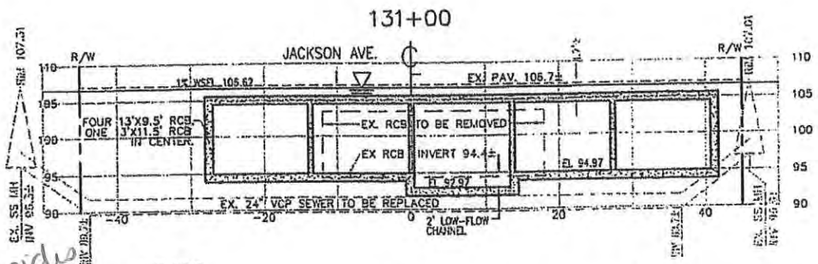

Revised profile = Solid pile walls both sides

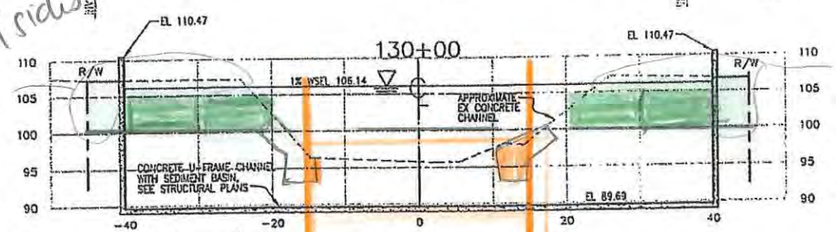

128+00 to 135+00

OHWL = 30'

Area Fill = Ø

Rock = 23ft²

Area = 4(50) + 2(50) = 300 ft²

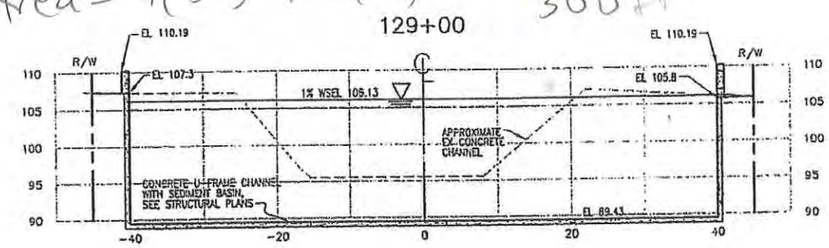

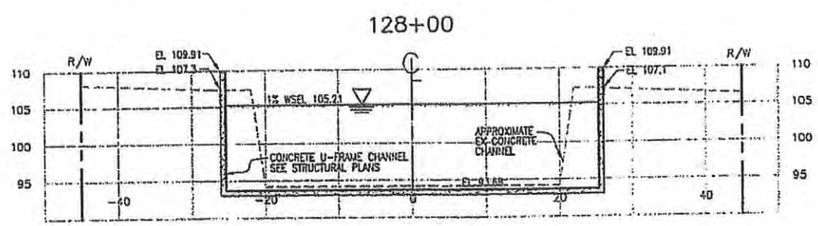

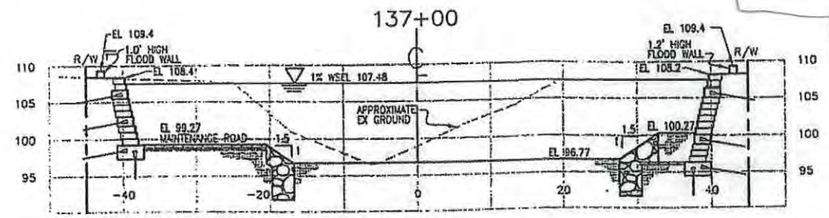

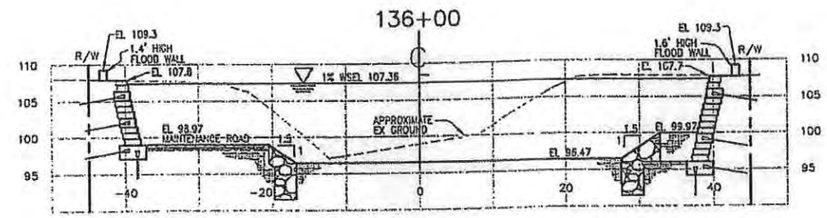

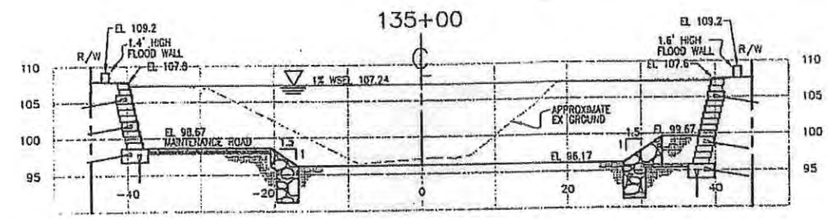

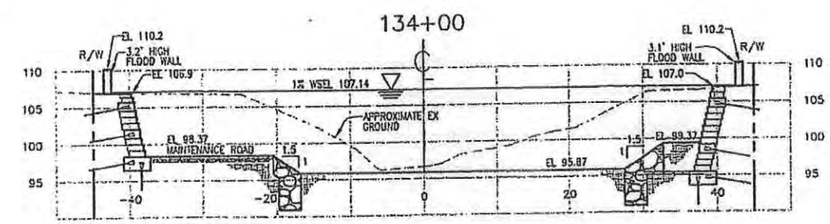

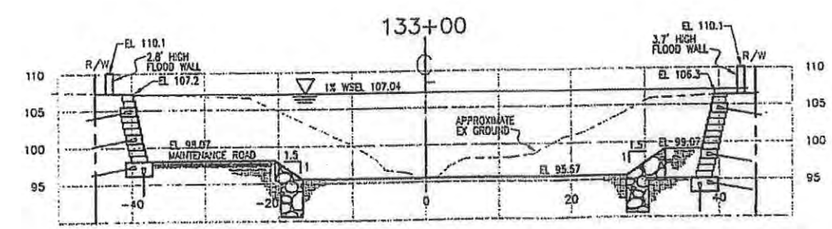

PRELIMINARY - NOT FOR CONSTRUCTION

REV	DESCRIPTION	DATE	APPR	REFERENCE INFORMATION AND NOTES

Ruggeri - Jensen Azar & Associates

DATE	SEP 2002
DESIGN	E.A
DRAWN	E.A
CHECKED	M.R.

Santa Clara Valley Water District

ACCEPTED BY DISTRICT — DATE

SENIOR PROJECT MANAGER

LOWER SILVER CREEK REACH 4
CROSS SECTIONS
STA.128+00 TO STA 137+00

VERIFY SCALES 0 — 1"

BAR IS ONE INCH ON ORIGINAL DRAWING IF NOT ONE INCH ON THIS SHEET, ADJUST SCALES ACCORDINGLY

SCALE 1"=10'

SHEET XS-1

47 OF 71

90% SUBMITTAL SET 9/12/02

TIME: 11:48AM
PATH: G:\JOBS00\002009\FINAL\90PERCENT\

DATE: 09/20/2002
DRAWING: X-SECT.DWG

142+00

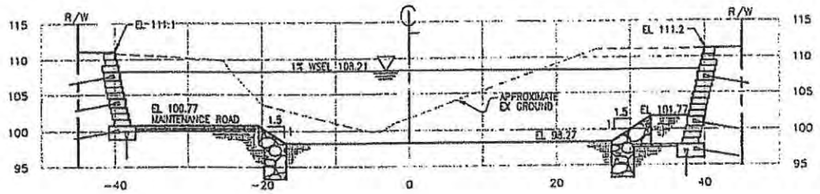

141+00

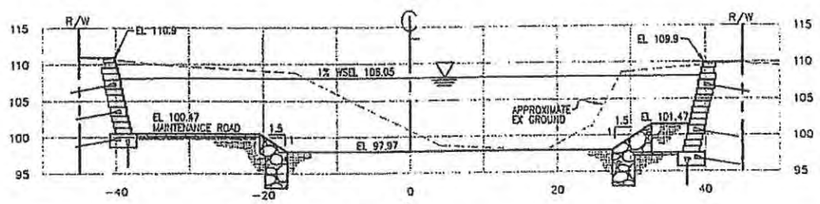

140+00

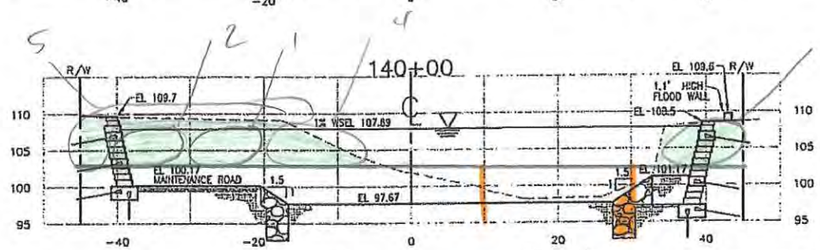

135+00 to 145+00

OHWL = 20'
Fill = Ø
Rock =

Area = 0 (50) + 5 (50) = 250 ft²

$(5 \times 4) + (\frac{1}{2} \times 1 \times 4) = 22 ft^2$

139+00

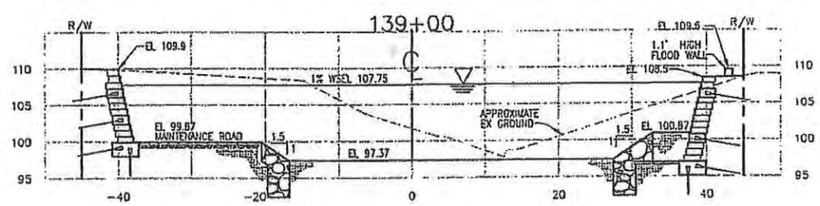

138+00

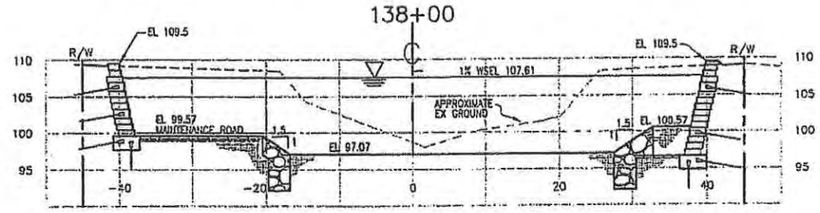

147+00

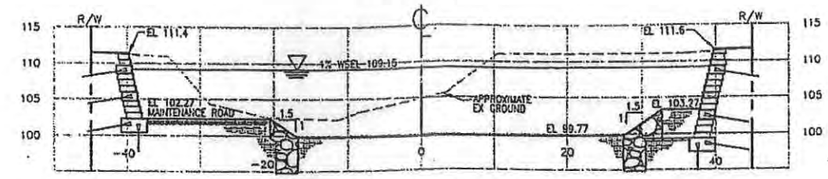

146+00

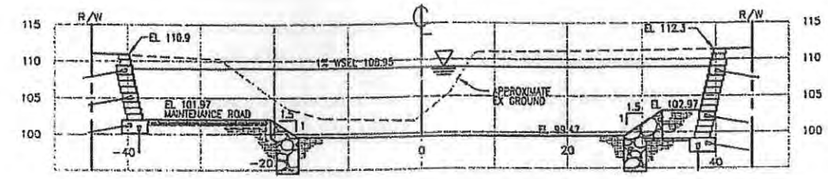

145+00

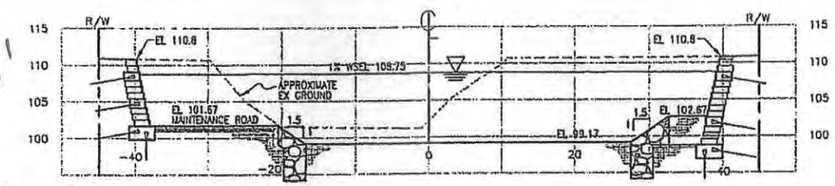

144+00

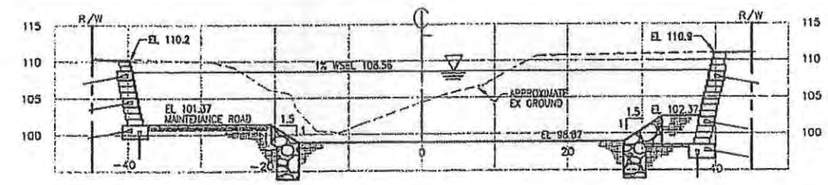

143+00

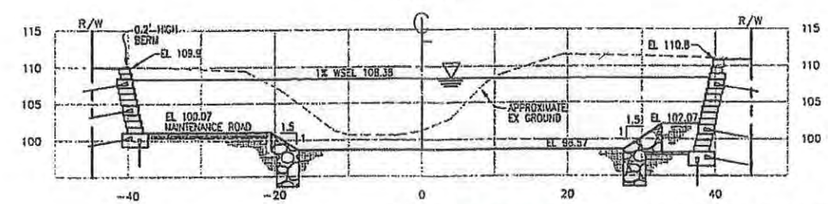

PRELIMINARY - NOT FOR CONSTRUCTION

REV	DESCRIPTION	DATE	APPR	REFERENCE INFORMATION AND NOTES

Ruggeri - Jensen Azar & Associates
5353 CAMINO ARROYO DRIVE • GILROY, CA 95020
PHONE (408) 848-3300 • FAX (408) 848-3302

DATE	SEP 2002
DESIGN	E.A
DRAWN	E.A
CHECKED	M.R.

Santa Clara Valley Water District

ACCEPTED BY DISTRICT

DATE

SENIOR PROJECT MANAGER

LOWER SILVER CREEK
REACH 4
CROSS SECTIONS
STA.138+00 TO STA 147+00

VERIFY SCALES 0 1"

BAR IS ONE INCH ON ORIGINAL DRAWING IF NOT ONE INCH ON THIS SHEET, ADJUST SCALES ACCORDINGLY

SCALE 1"=10'

SHEET XS-2

48 OF 71

90% SUBMITTAL SET 9/12/02

TIME: 11:48AM
PATH: G:\JOBS00\002009\FINAL\90PERCENT\

DATE: 09/20/2002
DRAWING: X-SECT.DWG

= remove

Reach 4

Compared to "Alt 4, Sect 3"

152+00

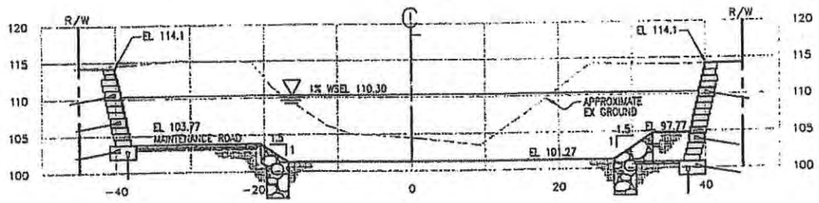

151+00

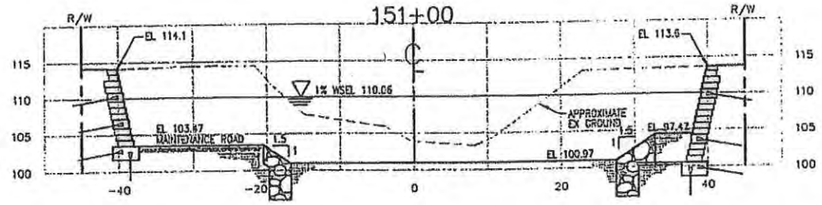

150+00

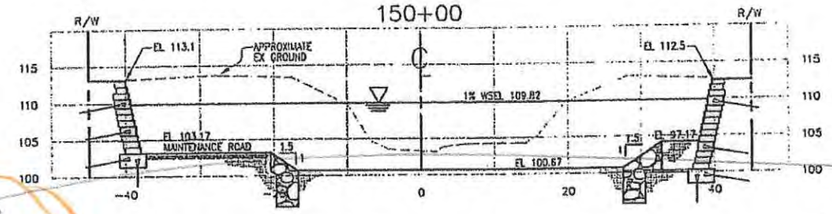

145+00 to 160+00
OHWL = 25'
Fill = ∅
Rock = ∅

Area = 0 (50) + 5 (50) = 250 ft²

149+00

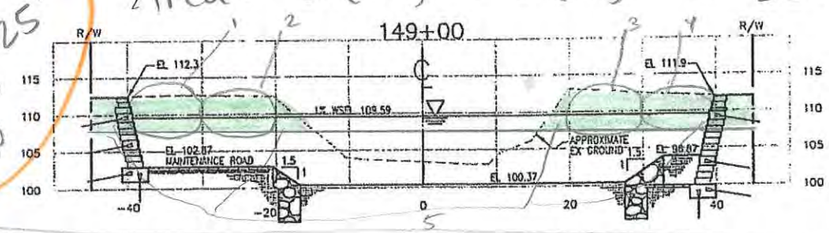

148+00

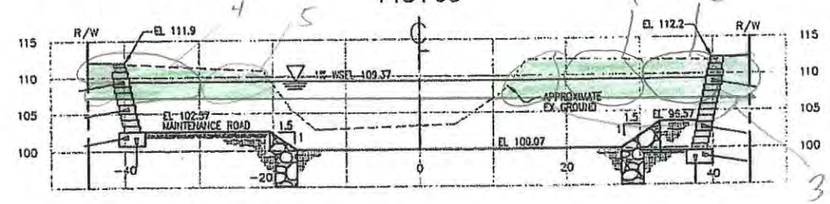

Area = 0 (50) + 5 (50) = 250 ft²

157+00

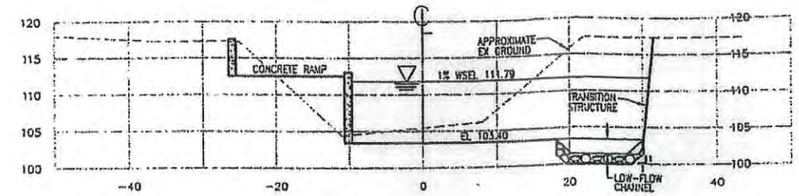

156+00

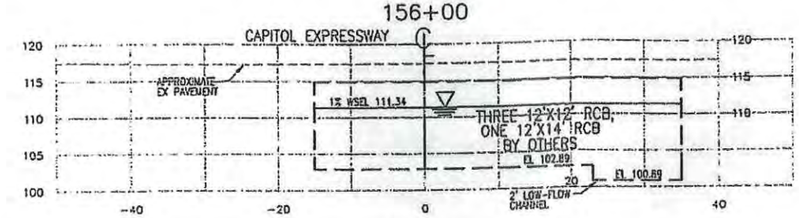

155+00

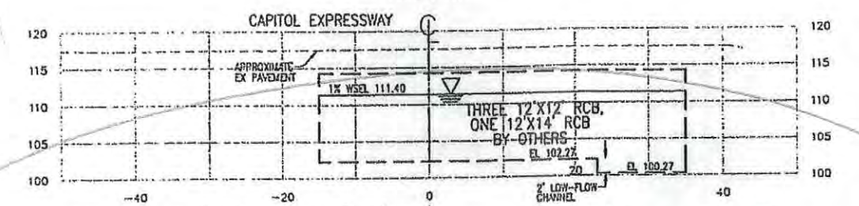

Area = 4 (50) + 5 (50) = 450 ft²
dark green lt. green

154+00

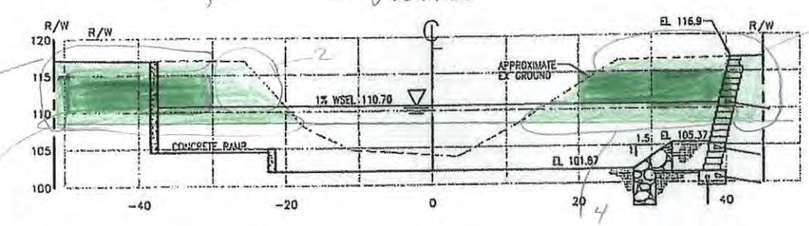

Area = 4 (50) + 3 (50) = 350 ft²

153+00

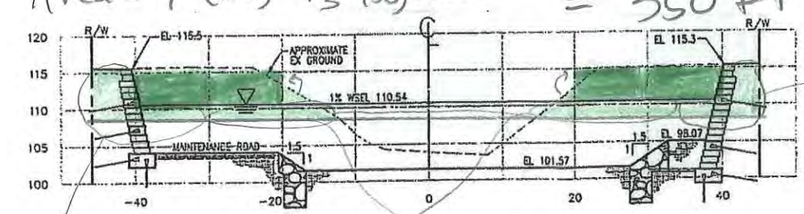

PRELIMINARY - NOT FOR CONSTRUCTION

REV	DESCRIPTION	DATE	APPR

REFERENCE INFORMATION AND NOTES

Ruggeri-Jensen-Azar & Associates

DATE SEP 2002
DESIGN EA
DRAWN EA
CHECKED M.R.

Santa Clara Valley Water District

ACCEPTED BY DISTRICT

DATE

SENIOR PROJECT MANAGER

LOWER SILVER CREEK REACH 4
CROSS SECTIONS
STA. 148+00 TO STA 157+00

VERIFY SCALES 0 1"
BAR IS ONE INCH ON ORIGINAL DRAWING IF NOT ONE INCH ON THIS SHEET, ADJUST SCALES ACCORDINGLY

SCALE 1"=10'

SHEET XS-3

49 OF 71

90% SUBMITTAL SET 9/12/02

TIME: 11:48AM
PATH: G:\J03500\002009\FINAL\90PERCENT\

DATE: 09/20/2002
DRAWING: X-SECT.DWG

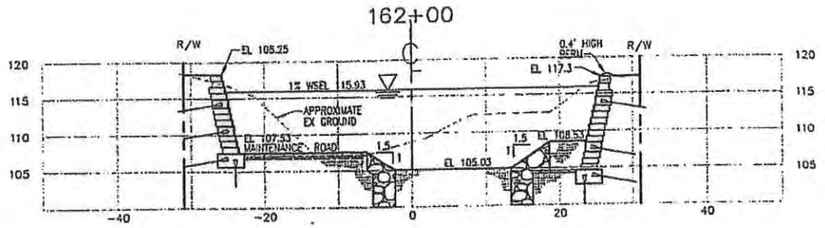

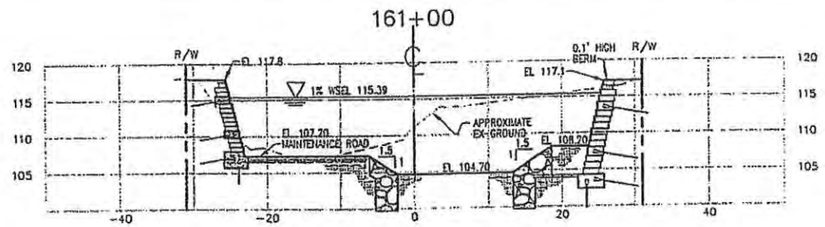

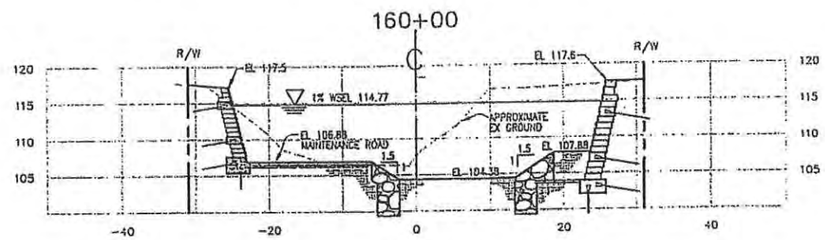

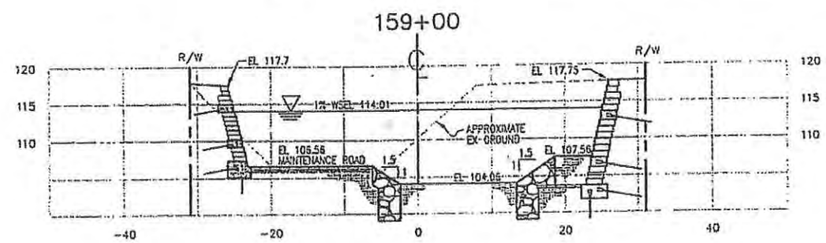

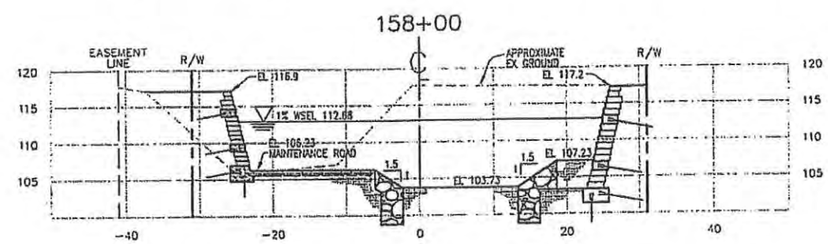

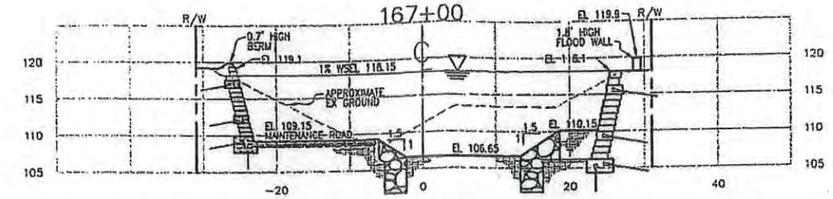

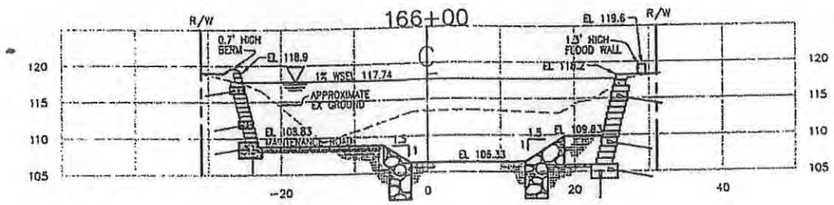

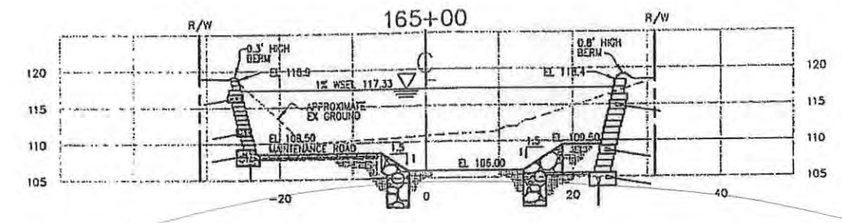

160+00 to
170+00
OHWL=18
Rock=23 ft²
Fill=13x2=26 ft²

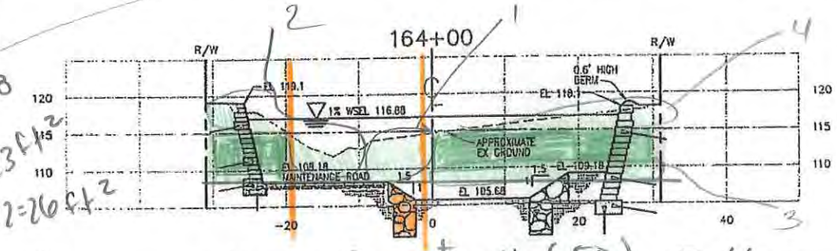

Area = 4 (50) + 4 (50) = 400

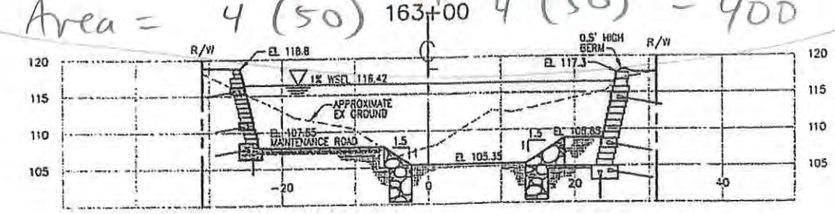

PRELIMINARY - NOT FOR CONSTRUCTION

REV	DESCRIPTION	DATE	APPR

REFERENCE INFORMATION AND NOTES

Ruggeri - Jensen Azar & Associates
5353 CAMINO ALMADEN DRIVE • SAN JOSE, CA. 95123
PHONE (408) 840-0200 • FAX (408) 840-0202

DATE	SEP 2002
DESIGN	EA
DRAWN	EA
CHECKED	M.R.

Santa Clara Valley Water District

ACCEPTED BY DISTRICT

DATE

SENIOR PROJECT MANAGER

LOWER SILVER CREEK
REACH 4
CROSS SECTIONS
STA.158+00 TO STA 167+00

VERIFY SCALES 0 1"

BAR IS ONE INCH ON ORIGINAL DRAWING IF NOT ONE INCH ON THIS SHEET, ADJUST SCALES ACCORDINGLY

SCALE 1"=10'

SHEET XS-4

50 OF 71

90% SUBMITTAL SET 9/12/02

TIME: 11:48AM
PATH: G:\JOBS00\002005\FINAL\90PERCENT\

DATE: 09/20/2002
DRAWING: X-SECT.DWG

Corps estimate

OHWL = 20'
Fill = Ø
Rip = 23ft²

Reach 5

compared to "Alt 4, Sec 2"

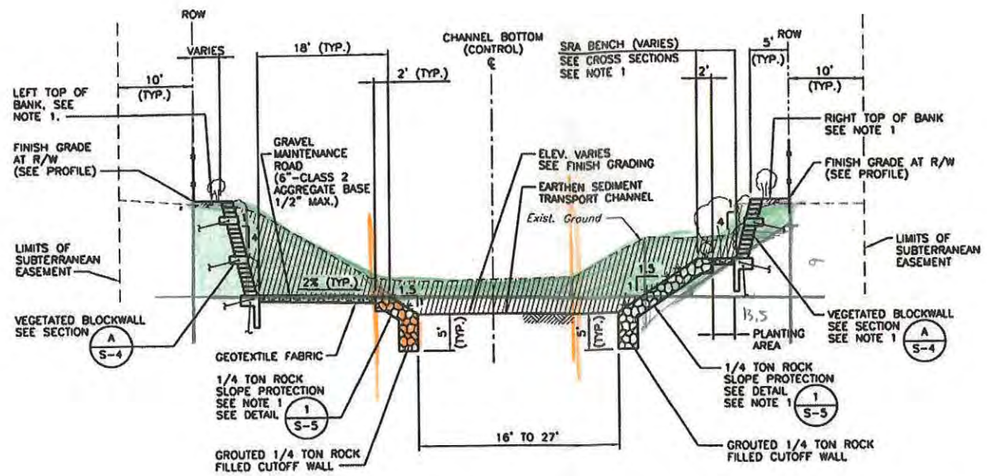

1 TYP. TYPICAL SECTION
LOWER SILVER CREEK–REACH 5
STA. 170+07.79 TO STA. 199+54.30
N.T.S.

CHANNEL EXCAVATION LIMITS

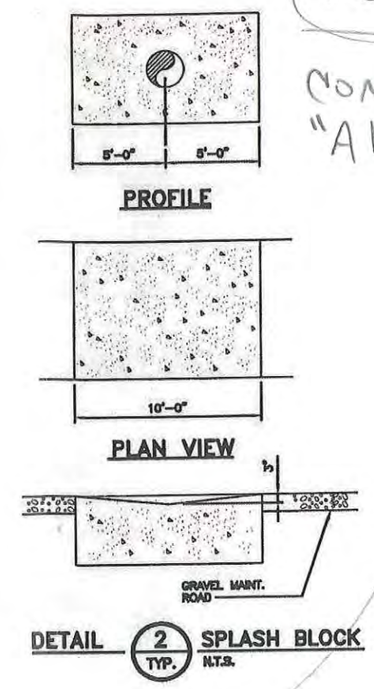

DETAIL 2 TYP. SPLASH BLOCK
N.T.S.

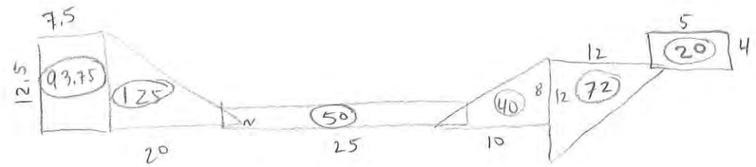

A = 93.75 + 125 + 50 + 40 + 72 + 20 = 400.75

~ 400 sqft

Note: this is the only cross section that shows existing!

= remove.

REV	DESCRIPTION	DATE	APPR
0	FINAL DESIGN SUBMITTAL	3/15/03	VMB

REFERENCE INFORMATION AND NOTES
1. FOR REVEGETATION FEATURES SEE SHEET L-7.
2. WHERE FLOODWALLS ARE REQUIRED INSTALL SUBSURFACE DRAIN PER SPECIFICATION.
3. ALL STATIONING SHOWN ARE ALONG CHANNEL BOTTOM CENTERLINE (NOT ALONG SURVEY P-LINE).

MAY 14, 2003 – 11:50am cad\dwg\SCVWD\PHASE 2\C-8.dwg

PARSONS
WALNUT CREEK, CALIFORNIA
(925) 941-3700

REGISTERED PROFESSIONAL ENGINEER VINOD M. BADANI C-041281 EXP. DATE 3/31/07 STATE OF CALIFORNIA

	DATE
	3/15/03
DESIGN	RMB/AW
DRAWN	MD
CHECKED	VMB

Santa Clara Valley Water District
ACCEPTED BY DISTRICT — DATE
SENIOR PROJECT MANAGER

LOWER SILVER CREEK
REACH 5 – NORTH BABB CREEK TO MURTHA DRIVE
TYPICAL CROSS SECTION
STA. 170+07.79 TO 199+54.3

VERIFY SCALES 0 — 1"
BAR IS ONE INCH ON ORIGINAL DRAWING IF NOT ONE INCH ON THIS SHEET, ADJUST SCALES ACCORDINGLY

SCALE N.T.S.
SHEET C-8
16 OF 46

whole blocks. parts estimate

Area = 21 (20) + 5.5 (20) = 530
(dark green) (light green)

Reach 6A

Compare to "Alt 4 Sect 2"

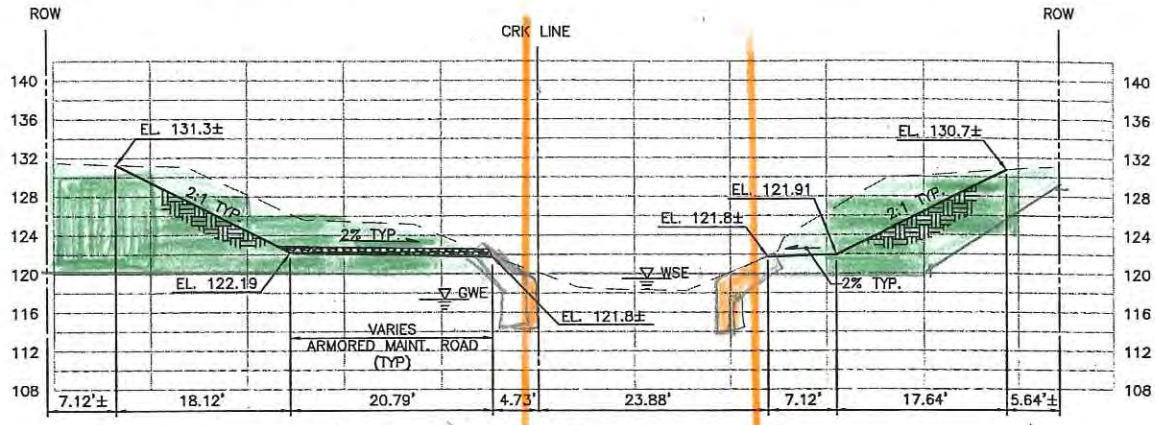

CROSS SECTION–STA. 219+00

Corps est

Corps = 23 ft²

OHWL = 25

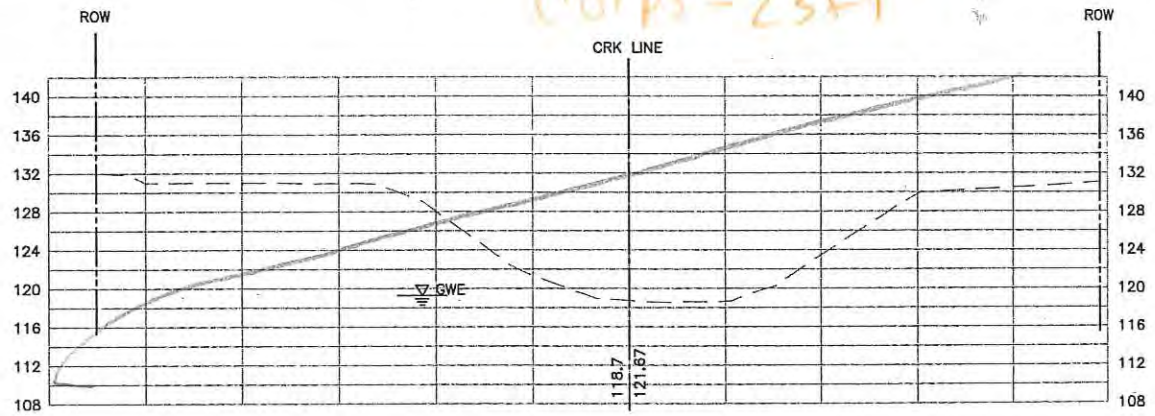

CROSS SECTION–STA. 218+00

For 200+00 to 217+00

RipRap = 23 ft²
per "Alt 4, Sect 2"

For 217+00 to 24+00

RipRap = 46 ft²
per "Alt 4, Sect 1"

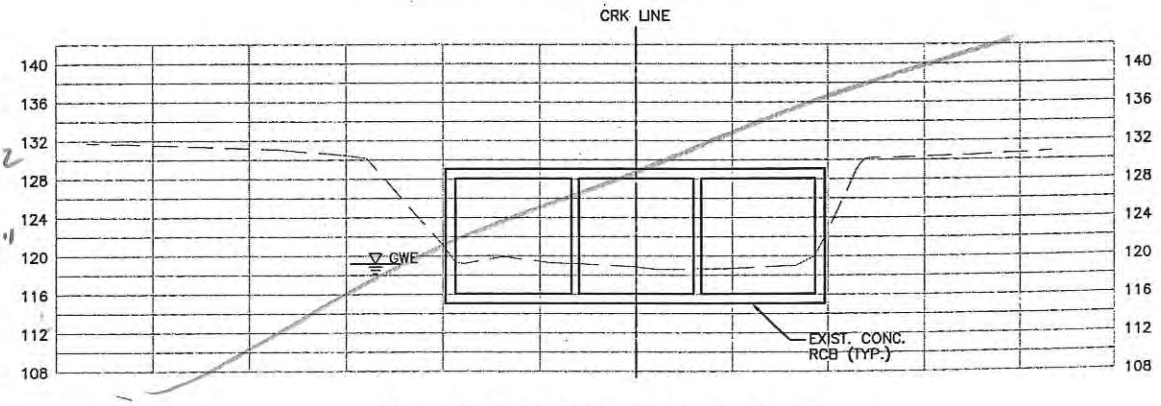

CROSS SECTION–STA. 217+50

DESCRIPTION	DATE	APPR

REFERENCE INFORMATION AND NOTES
1. HORIZONTAL DIMENSIONS SHOWN ARE PERPENDICULAR TO CHANNEL BOTTOM (CONTROL).
2. FOR GEOMETRY AND LAYOUT OF CENTERLINE OF CHANNEL BOTTOM SEE SHT. C–5.

DATE 7/10/09
DESIGN BP
DRAWN

REGISTERED PROFESSIONAL ENGINEER JIMMY W. SIMS No. 35458 09/30/09

Santa Clara

ACCEPTED BY DISTRIC

Avg area = $\frac{340+320}{2}$ = 330 Reach 6B

compare to "Alt 4, Sect 1"

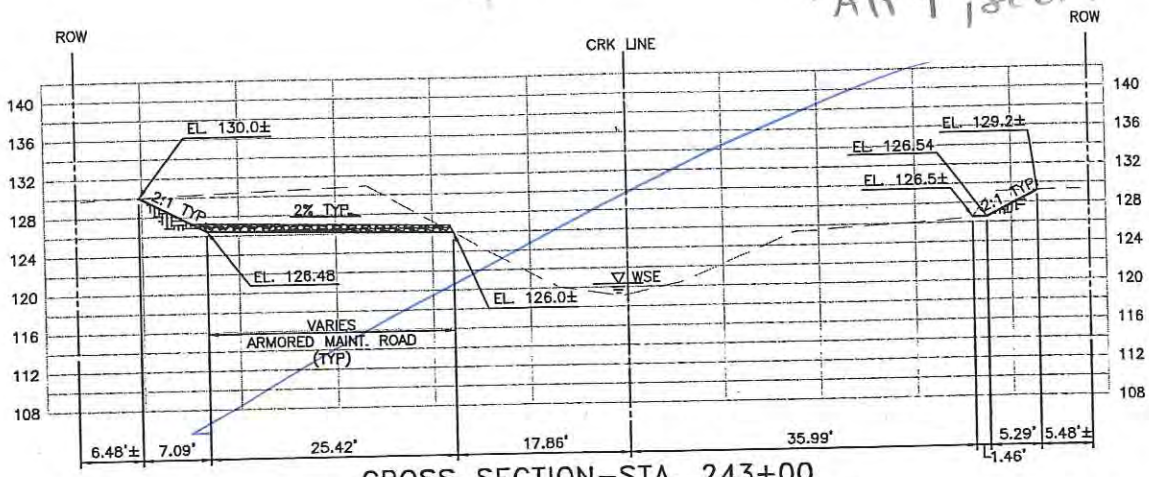

CROSS SECTION–STA. 243+00

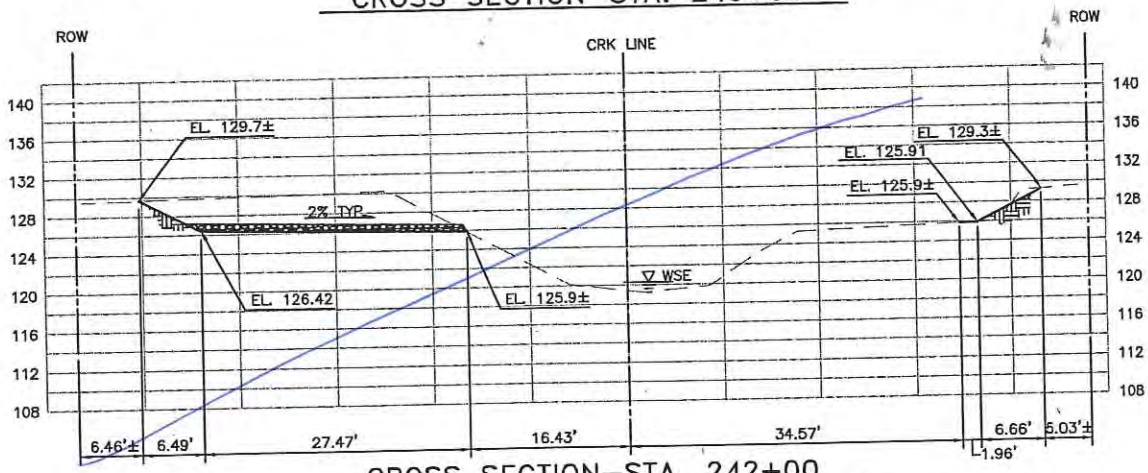

CROSS SECTION–STA. 242+00

Corps = 46 ft²

Assume for STA 217+00 ~~231+00~~ to 244+00

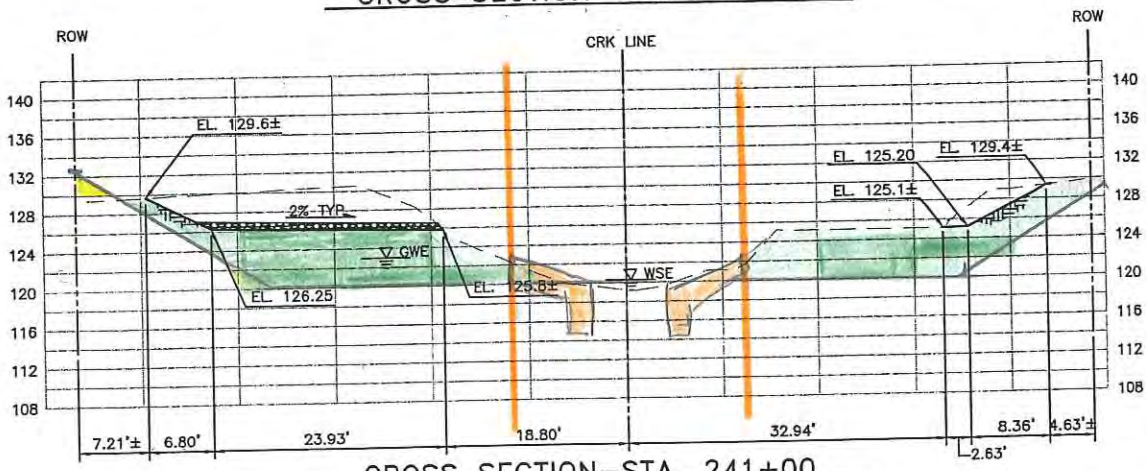

CROSS SECTION–STA. 241+00

remove

add

Area = 10(20) + 7 (20) = 340

(dark gr) (lt. green) (I used 330)

DESCRIPTION	DATE	APPR

REFERENCE INFORMATION AND NOTES

1. HORIZONTAL DIMENSIONS SHOWN ARE PERPENDICULAR TO CHANNEL BOTTOM (CONTROL).
2. FOR GEOMETRY AND LAYOUT OF CENTERLINE OF CHANNEL BOTTOM SEE SHT. C–5.
3. ALL STATIONING SHOWN ARE ALONG CRK LINE (NOT ALONG SURVEY P–LINE).

MARK THOMAS & COMPANY, INC.
1960 ZANKER ROAD

DATE 7/10/09
DESIGN BP
DRAWN AB/RF
CHECKED

REGISTERED PROFESSIONAL ENGINEER
JIMMY W. SIMS
No. 35458
Exp. 09/30/09
CIVIL
STATE OF CALIFORNIA

Santa Clara Vall

ACCEPTED BY DISTRICT

PROJECT MANAGER

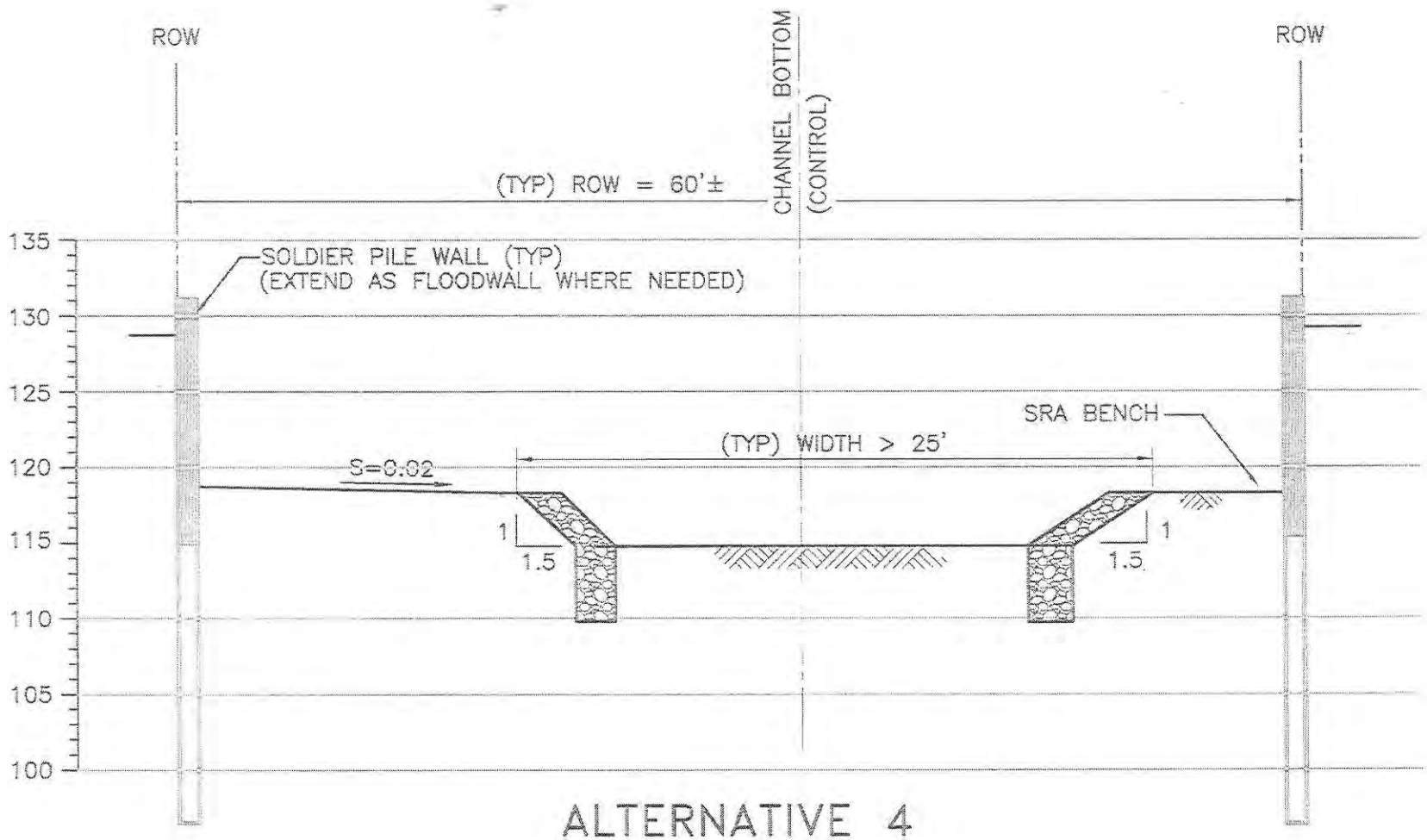

ALTERNATIVE 4

TYP SECTION 3 – SOLDIER PILE WALLS BOTH SIDES

R4 STA. 157+00 TO STA. 180+00

NTS

Weisheim

~~Scito~~ @ 155/157

Jackson @ 131

Dobein Bridge @ 143

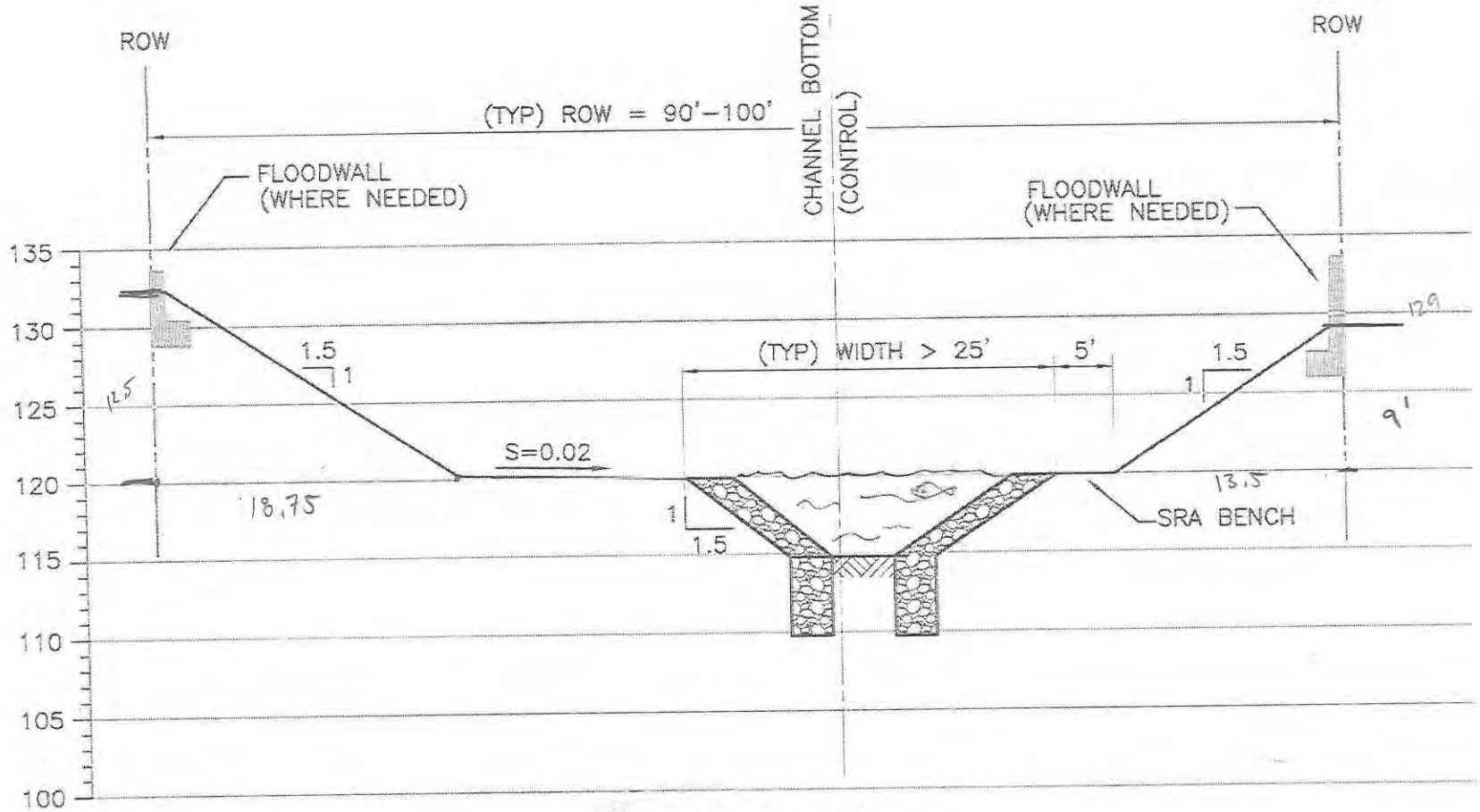

ALTERNATIVE 4

TYP SECTION 1 – 1.5:1 SLOPE BOTH SIDES

STA. 133+00 TO STA. 154.00 AND

R6 → STA. 219+00 TO STA. 245+00 (Scale @ STA 33.)

(Cunningham @ STA 244)

NTS

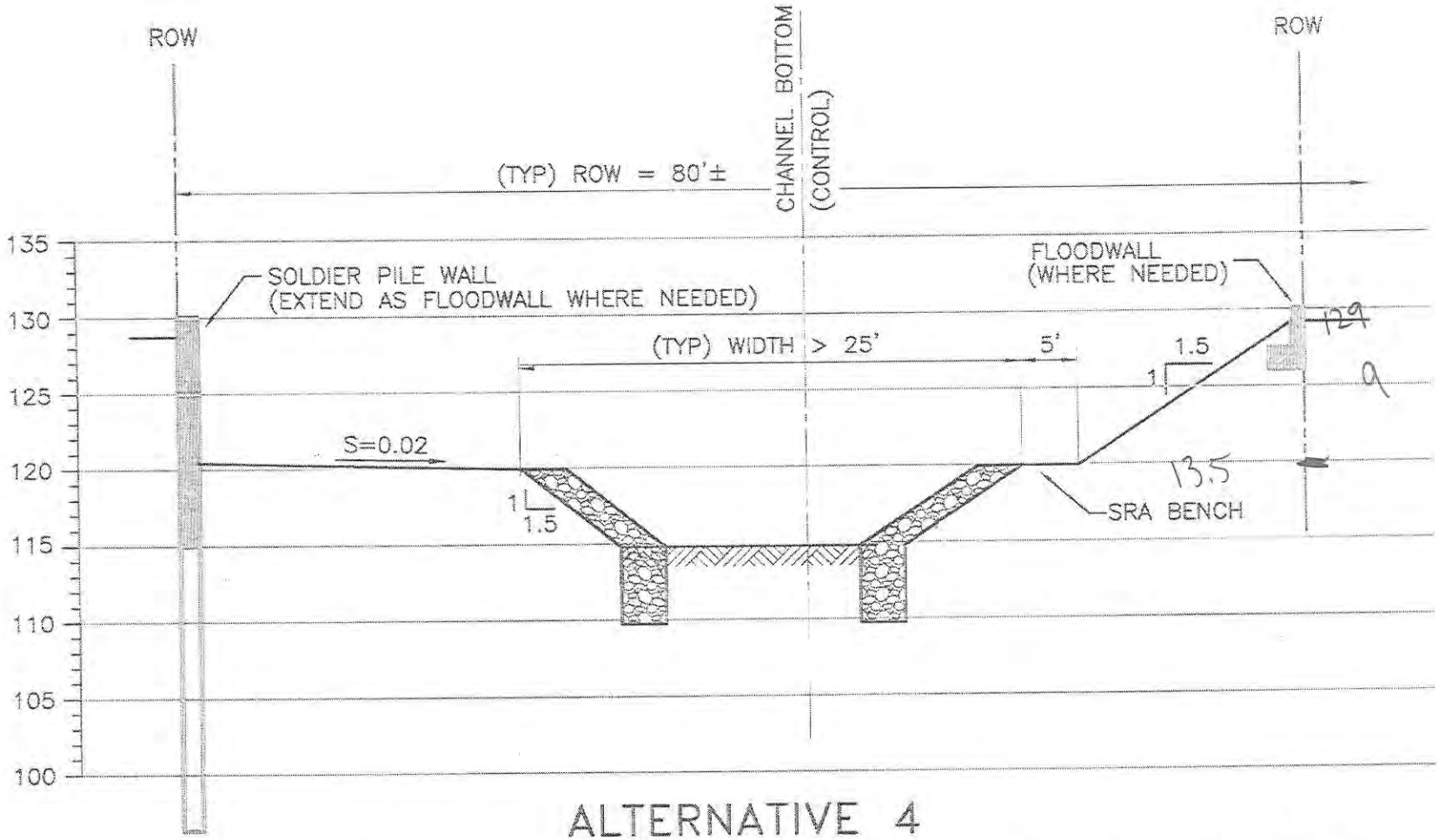

ALTERNATIVE 4

TYP SECTION 2 – SOLDIER PILE W/ 1.5:1 SLOPE

R5 → STA. 184+00 TO STA. 216+00 → (Moss Pt. @ 217)

NTS

photo → (Martha @ 214) upstream

→ (Stem @ 182) upstream

DEPARTMENT OF THE ARMY PERMIT

Permittee: **Santa Clara Valley Water Distict**

Permit No.: **24317S**

Issuing Office: **San Francisco District**

NOTE. The term "you" and its derivatives, as used in this permit, means the permittee or any future transferee. The term "this office" refers to the appropriate district or division office of the Corps of Engineers having jurisdiction over the permitted activity or the appropriate official of that office acting under the authority of the commanding officer.

You are authorized to perform work in accordance with the terms and conditions specified below.

Project Description:

You are authorized to discharge 35,000 cubic yards of earth, concrete and rock fill into 4.17 acres of wetlands and 4.1 acres of waters of the U.S. to construct: concrete lined channels; vegetated hybrid block channels; fishery improvement structures and a fish ladder at Quimby Road; recontoured channel banks; and wetlands. A detailed description of the work is contained in attachment 1. Work shall be carried out in accordance with the attached plans and drawings labeled: "Coyote Watershed, Santa Clara Valley Water District, Lower Silver Creek Watershed Project, December 2001 Update" in 21 sheets.

Project Location:

The project site is located in Lower Silver Creek from Lake Cunningham to the confluence with Coyote Creek in the City of San Jose, Santa Clara County, California.

Permit Conditions:

General Conditions:

1. The time limit for completing the work authorized ends on **1 February, 2010**. If you find that you need more time to complete the authorized activity, submit your request for a time extension to this office for consideration at least one month before the above date is reached.

2. You must maintain the activity authorized by this permit in good condition and in conformance with the terms and conditions of this permit. You are not relieved of this requirement if you abandon the permitted activity, although you may make a good faith transfer to a third party in compliance with General Condition 4 below. Should you wish to cease to maintain the authorized activity or should you desire to abandon it without a good faith transfer, you must obtain a modification of this permit from this office, which may require restoration of the area.

3. If you discover any previously unknown historic or archeological remains while accomplishing the activity authorized by this permit, you must immediately notify this office of what you have found. We will initiate the Federal and state coordination required to determine if the remains warrant a recovery effort or if the site is eligible for listing in the National Register of Historic Places.

4. If you sell the property associated with this permit, you must obtain the signature of the new owner in the space provided and forward a copy of the permit to this office to validate the transfer of this authorization.

5. If a conditioned water quality certification has been issued for your project, you must comply with the conditions specified in the certification as special conditions to this permit. For your convenience, a copy of the certification is attached if it contains such conditions.

6. You must allow representatives from this office to inspect the authorized activity at any time deemed necessary to ensure that it is being or has been accomplished in accordance with the terms and conditions of your permit.

Special Conditions:

Mitigation shall be carried out in accordance with the "Lower Silver Creek Watershed Project, Mitigation and Monitoring Program", prepared by Rene' Langis, Program Biologist, Santa Clara Valley Water District, dated December 2001 and subsequent Corps approved revisions.

Further Information:

1. Congressional Authorities: You have been authorized to undertake the activity described above pursuant to:

( ) Section 10 of the Rivers and Harbors Act of 1899 (33 U.S.C. 403).

(X) Section 404 of the Clean Water Act (33 U.S.C. 1344).

( ) Section 103 of the Marine Protection, Research and Sanctuaries Act of 1972 (33 U.S.C. 1413).

2. Limits of this authorization.

a. This permit does not obviate the need to obtain other Federal, state, or local authorizations required by law.

b. This permit does not grant any property rights or exclusive privileges.

c. This permit does not authorize any injury to the property or rights of others.

d. This permit does not authorize interference with any existing or proposed Federal project.

3. Limits of Federal Liability. In issuing this permit, the Federal Government does not assume any liability for the following:

a. Damages to the permitted project or uses thereof as a result of other permitted or unpermitted activities or from natural causes.

b. Damages to the permitted project or uses thereof as a result of current or future activities undertaken by or on behalf of the United States in the public interest.

c. Damages to persons, property, or to other permitted or unpermitted activities or structures caused by the activity authorized by this permit.

d. Design or construction deficiencies associated with the permitted work.

c. Damage claims associated with any future modification, suspension, or revocation of this permit.

4. Reliance on Applicant's Data: The determination of this office that issuance of this permit is not contrary to the public interest was made in reliance on the information you provided.

5. Reevaluation of Permit Decision. This office may reevaluate its decision on this permit at any time the circumstances warrant. Circumstances that could require a reevaluation include, but are not limited to, the following:

a. You fail to comply with the terms and conditions of this permit.

b. The information provided by you in support of your permit application proves to have been false, incomplete, or inaccurate (See 4 above).

c. Significant new information surfaces which this office did not consider in reaching the original public interest decision.

Such a reevaluation may result in a determination that it is appropriate to use the suspension, modification, and revocation procedures contained in 33 CFR 325.7 or enforcement procedures such as those contained in 33 CFR 326.4 and 326.5. The referenced enforcement procedures provide for the issuance of an administrative order requiring you to comply with the terms and conditions of your permit and for the initiation of legal action where appropriate. You will be required to pay for any corrective measures ordered by this office, and if you fail to comply with such directive, this office may in certain situations (such as those specified in 33 CFR 209.170) accomplish the corrective measures by contract or otherwise and bill you for the cost.

6. Extensions. General condition 1 establishes a time limit for the completion of the activity authorized by this permit. Unless there are circumstances requiring either a prompt completion of the authorized activity or a reevaluation of the public interest decision, the Corps will normally give favorable consideration to a request for an extension of this time limit.

Your signature below, as permittee, indicates that you accept and agree to comply with the terms and conditions of this permit.

Stanley M. Williams 4/23/2002

(Permittee) (Date)

This permit becomes effective when the Federal official, designated to act for the Secretary of the Army, has signed below.

5/7/2002

(District Engineer) Timothy S. O'Rourke, LTC, EN (Date)

When the structures or work authorized by this permit are still in existence at the time the property is transferred, the terms and conditions of this permit will continue to be binding on the new owner(s) of the property. To validate the transfer of this permit and the associated liabilities associated with compliance with its terms and conditions, have the transferee sign and date below.

(Transferee) (Date)

Attachment 1.
Lower Silver Creek Watershed Project Description by Reach

Reach 1a
The two-stage earth channel is 900 feet long and includes a 400-foot section with gabion protection on the north bank and a 3-foot deep sediment transport channel. Native riparian trees and shrubs would be planted on the south bank for shade. Bio-engineering techniques for slope stabilization and habitat value enhancement will be implemented where feasible. One 2-foot, 5-foot high grade control structure with a low-flow notch will be incorporated. A meandering base-flow channel would form within the sediment transport channel. The channel invert elevation would be 6 inches to 12 inches above water table to support emergent marsh. The maintenance road, constructed 3 feet above the channel invert would be made of semi-permeable material (either a Class 2 aggregate base or of 6 to 8 inch deep honeycomb cells filled with granular soil). Approximately 18,000 cubic yards of earth would be excavated.

Reach 1b
The vegetated gabions channel with earthen invert would be 300 feet long. As with other earth bottom reaches, emergent marsh vegetation would be allowed to naturally colonize the bottom of the sediment transport channel. Shaded riverine aquatic (SRA) vegetation would be planted along the south bank of the sediment transport channel and upland trees and shrubs would be planted on top of both banks. A meandering base-flow channel would form within the sediment transport channel. A new bridge is planned at Wooster Avenue. Approximately 19,000 cubic yards of earth would be excavated.

Reach 1c
The vegetated gabions channel (due to tight 120-foot right-of-way) with earth bottom would be 1,100 feet long. The low flows would be concentrated in a naturally formed meandering base-flow channel. Native upland trees, shrubs, and vines would be planted along top of bank, vines and grasses on the gabions, and trees and shrubs would be planted at the base of the south bank gabions to provide shaded riverine aquatic cover. A meandering base-flow channel would form within the sediment transport channel. Approximately 22,100 cubic yards of earth would be excavated.

Reach 1d
The two-stage earth channel with 4-foot high floodwalls for freeboard would be 1,200 feet long and include a 600-foot section with vegetated gabions on the north bank. Sediment transport channel width would be 62 feet and right-of-way would be 170 feet. Riparian species would be planted for shade and habitat. Emergent wetland vegetation would naturally colonize the sediment transport channel and maintenance access would be constructed 6 feet above the channel bottom. A meandering base-flow channel would form within the sediment transport channel. Approximately 35,500 cubic yards of earth would be excavated.

Reach 2
The architecturally treated rectangular concrete channel, due to very tight 65-foot right-of-way, would be 1,200 feet long. The channel would include a low-flow channel to allow continuity of base flows. Sediment would be periodically removed. Native trees and vines would be planted on top of the south bank to shade the channel. Approximately 10,500 cubic yards of earth would be excavated.

Reach 3a
The earth channel would be 1,600 feet long. Emergent marsh vegetation would naturally colonize the bottom of the sediment transport channel. Floodwalls (approx. 4 feet high) would be constructed for freeboard on the residential side. A combination of floodwalls and overland flow and park access would be constructed on the other side. Riparian trees and shrubs would be planted on south bank. A meandering base-flow channel would form within the sediment transport channel. Approximately 21,100 cubic yards of earth would be excavated.

Reach 3b
The architecturally treated rectangular concrete channel, due to very tight 68-foot right-of-way, would be 925 feet long. The channel would include a low-flow channel to allow continuity of base flows. Native trees, shrubs, and vines would be planted along top of banks. Approximately 22,700 cubic yards of earth would be excavated.

Reach 3c
The existing trapezoidal concrete channel in a very narrow 45-foot right-of-way would be replaced with a 725-foot rectangular concrete channel (similar to Reach 3b) followed by a 475 foot-long section with gabion protection on the right bank and a 2:1 earth slope on the left bank, 95 feet long made possible by a planned purchase of additional right-of-way. The gabion/earth bank section would include a naturally formed base-flow channel, a sediment transport channel, and riparian vegetation on the south bank. Approximately 30,600 cubic yards of earth would be excavated.

Reach 3d
The gabion/earth bank channel, made possible through the planned purchase of additional right-of-way, would be 300 feet long and would include a naturally formed base-flow channel, a sediment transport channel, and riparian vegetation on the south bank. Approximately 19,500 cubic yards of earth would be excavated.

Reach 3e
The earth channel with 60 to 75-foot bottom width and 130-foot right-of-way would be 655 feet long. Riparian habitat would be planted along the south bank. Emergent marsh vegetation would naturally colonize the bottom of the sediment transport channel. Floodwalls would be installed for freeboard on the residential side. A combination of floodwalls and overland flow and park access would be created on the other side. The fish resting pool would be located away from public access to limit predation. Riparian trees and shrubs would be planted on south bank; native upland trees would be planted on top of the north bank. A meandering base-flow channel would naturally form within the sediment transport channel. Kammerer Avenue Bridge would be replaced with pedestrian bridge. Approximately 20,000 cubic yards of earth would be excavated.

Reach 3f
The earth channel with 110-foot bottom width and 170-foot right-of-way would be 900 feet long. Additional right-of-way would be purchased from the nearby school. Riparian habitat, including SRA cover, would be planted along the south bank. Emergent marsh vegetation would naturally colonize the bottom of the sediment transport channel. An environmental classroom and channel access road would be constructed on the south bank. Approximately 23,000 cubic yards of earth would be excavated.

Reach 4a
The U-frame concrete channel with sediment trap would be 220 feet long. The existing concrete channel would be removed. Trees and shrubs would be planted on top of both banks. A new bridge

would be built on Jackson Avenue. Four-foot high floodwalls required for freeboard would be constructed. Approximately 3,800 cubic yards of earth would be excavated.

Reach 4b

The hybrid vegetated block wall and/or gabion lined channel with earthen invert would be 2,200 feet long. Emergent marsh vegetation would naturally colonize the bottom of the sediment transport channel. Riparian trees and shrubs, providing SRA cover, would be planted along the south bank. Four-foot high floodwalls required for freeboard would be constructed. A meandering base-flow channel would form in the sediment transport channel bottom. Approximately 28,000 cubic yards of earth would be excavated.

Reach 4c

The hybrid vegetated block wall and/or gabion protected channel with earthen invert would be 1,700 feet long. Bottom width would be 34 feet and right- of-way would be 62 feet. Emergent marsh vegetation would naturally colonize the bottom of the sediment transport channel. A maintenance access road would be constructed approximately 2 feet above the channel bottom. Riparian trees and shrubs would be planted along the south bank of the sediment transport channel. A meandering base-flow channel would form in the sediment transport channel bottom. Four-foot high floodwalls required for freeboard would be constructed. Approximately 8,000 cubic yards of earth would be excavated.

Reach 5a

The hybrid vegetated block and/or gabion protected wall channel with earthen invert would be 240 feet long. Emergent marsh vegetation would naturally colonize the bottom of the sediment transport channel. A maintenance access road would be constructed approximately 2 feet above the channel bottom. Riparian trees and shrubs would be planted along the south bank of the sediment transport channel. A meandering base-flow channel would form in the sediment transport channel bottom. The North Babb Creek channel transition structure would be constructed. Approximately 2,700 cubic yards of earth would be excavated

Reach 5b

The hybrid vegetated block wall and/or gabion protected channel with earthen invert would be 800 feet long. The bottom width would be 37 feet and right-of-way would be 65 feet. Emergent marsh vegetation would naturally colonize the bottom of the sediment transport channel. A maintenance access road would be constructed approximately 2 feet above the channel bottom. Riparian trees and shrubs would be planted along the south bank of the sediment transport channel. A meandering base-flow channel would form in the sediment transport channel bottom. Trees and shrubs would be planted on top of the north bank. Four-foot high floodwalls required for freeboard would be constructed. Approximately 7,000 cubic yards of earth would be excavated.

Reach 5c

The hybrid vegetated block wall and/or gabion protected channel with earthen invert would be 1,830 feet long. The bottom width would be 50 feet and right-of-way would be 80 feet. Emergent marsh vegetation would naturally colonize the bottom of the sediment transport channel. A maintenance access road would be constructed approximately 2 feet above the channel bottom. Riparian trees and shrubs would be planted along the south bank of the sediment transport channel. A meandering base-flow channel would form in the sediment transport channel bottom. Four-foot high floodwalls required for freeboard would be constructed. Approximately 16,500 cubic yards of earth would be excavated

Reach 6a

The hybrid vegetated block wall and/or gabion protected channel with earthen invert would be 1,480 feet long. The bottom width would be 34 feet and right-of-way would be 62 feet. Emergent marsh vegetation would naturally colonize the bottom of the sediment transport channel. A maintenance access road would be constructed approximately 2 feet above the channel bottom. Riparian trees and shrubs would be planted along the south bank of the sediment transport channel. A meandering base-flow channel would form in the sediment transport channel bottom. Four-foot high floodwalls required for freeboard would be constructed. Approximately 25,500 cubic yards of earth would be excavated.

Reach 6b

The channel with hybrid vegetated block wall and/or gabion protection on the north bank and 2:1 earth slope on the south bank channel and earthen invert would be 2,540 feet long. The bottom width would be 80 feet and right-of-way would be 105 feet. Emergent marsh vegetation would naturally colonize the bottom of the sediment transport channel. A maintenance access road would be constructed approximately 2 feet above the channel bottom. Riparian trees and shrubs would be planted along the south bank. A meandering base-flow channel would form in the sediment transport channel bottom. Four-foot high floodwalls required for freeboard would be constructed. Approximately 53,500 cubic yards of earth would be excavated.

Santa Clara Valley Water District

5750 ALMADEN EXPWY
SAN JOSE, CA 95118-3686
TELEPHONE (408) 265-2600
FACSIMILE (408) 266-0271
www.valleywater.org
AN EQUAL OPPORTUNITY EMPLOYER

December 24, 2009

Mr. Bob Smith
United States Army Corps of Engineers
1455 Market Street, 16th Floor
San Francisco, CA 94103-1398

Subject: Permit Extension Request for the Lower Silver Creek Watershed Project Permit No. 24317S

Dear Mr. Smith:

The U.S. Army Corps of Engineers (Corps) issued a Section 404 Permit (Permit) to the Santa Clara Valley Water District (District) in 2002 for the Lower Silver Creek Watershed Project (Project). A copy of the Permit is enclosed with this letter for your reference. The permit will expire on February 1, 2010 and we are writing to request an extension for this Permit for another five years or until February 1, 2015. This extension would allow the District to complete the project as currently permitted.

The Project consists of various improvements to six reaches of Lower Silver Creek. The District completed the improvements for Reaches 1 through 3 in 2006. Improvements for Reaches 4 through 6 are currently in the design phase, with construction scheduled to begin in Summer 2010 and be completed in 5 years.

In our phone conversation of October 2, 2009, I mentioned that the District is considering several changes that will further improve the Project, and is investigating the viability of the new alternatives. The District is in the process of updating the Project Description for Reaches 4 to 6 to reflect the changes, and will provide the revised Project Description to the Corps when it is completed in March or April 2010 for the Corps to evaluate whether a permit modification would be needed.

Thank you for your consideration of this request for extension of the existing permit. Please contact me at (510) 587-7774 should you have any questions or would like to discuss this request.

Sincerely,

Rene Langis, PhD
Senior Environmental Planner
Coyote Watershed Program

Enclosure: Copy of the Section 404 Permit (**No. 24317S**)

cc: Mr. Dennis Cheong
Senior Project Manager
Santa Clara Valley Water District
5750 Almaden Expressway
San Jose, CA 95118

Mr. David Dunlap
Senior Environmental Planner
Santa Clara Valley Water District
5750 Almaden Expressway
San Jose, CA 95118

Mr. Steve Bui
Coyote Watershed Program
RMC Water and Environment
2290 North First Street, Suite 212
San Jose, CA 95131

DEPARTMENT OF THE ARMY PERMIT

Permittee: **Santa Clara Valley Water Distict**

Permit No.: **24317S**

Issuing Office: **San Francisco District**

NOTE. The term "you" and its derivatives, as used in this permit, means the permittee or any future transferee. The term "this office" refers to the appropriate district or division office of the Corps of Engineers having jurisdiction over the permitted activity or the appropriate official of that office acting under the authority of the commanding officer.

You are authorized to perform work in accordance with the terms and conditions specified below.

Project Description:

You are authorized to discharge 35,000 cubic yards of earth, concrete and rock fill into 4.17 acres of wetlands and 4.1 acres of waters of the U.S. to construct: concrete lined channels; vegetated hybrid block channels; fishery improvement structures and a fish ladder at Quimby Road; recontoured channel banks; and wetlands. A detailed description of the work is contained in attachment 1. Work shall be carried out in accordance with the attached plans and drawings labeled: "Coyote Watershed, Santa Clara Valley Water District, Lower Silver Creek Watershed Project, December 2001 Update" in 21 sheets.

Project Location:

The project site is located in Lower Silver Creek from Lake Cunningham to the confluence with Coyote Creek in the City of San Jose, Santa Clara County, California.

Permit Conditions:

General Conditions:

1. The time limit for completing the work authorized ends on **1 February, 2010**. If you find that you need more time to complete the authorized activity, submit your request for a time extension to this office for consideration at least one month before the above date is reached.

2. You must maintain the activity authorized by this permit in good condition and in conformance with the terms and conditions of this permit. You are not relieved of this requirement if you abandon the permitted activity, although you may make a good faith transfer to a third party in compliance with General Condition 4 below. Should you wish to cease to maintain the authorized activity or should you desire to abandon it without a good faith transfer, you must obtain a modification of this permit from this office, which may require restoration of the area.

3. If you discover any previously unknown historic or archeological remains while accomplishing the activity authorized by this permit, you must immediately notify this office of what you have found. We will initiate the Federal and state coordination required to determine if the remains warrant a recovery effort or if the site is eligible for listing in the National Register of Historic Places.

4. If you sell the property associated with this permit, you must obtain the signature of the new owner in the space provided and forward a copy of the permit to this office to validate the transfer of this authorization.

5. If a conditioned water quality certification has been issued for your project, you must comply with the conditions specified in the certification as special conditions to this permit. For your convenience, a copy of the certification is attached if it contains such conditions.

6. You must allow representatives from this office to inspect the authorized activity at any time deemed necessary to ensure that it is being or has been accomplished in accordance with the terms and conditions of your permit.

Special Conditions:

Mitigation shall be carried out in accordance with the "Lower Silver Creek Watershed Project, Mitigation and Monitoring Program", prepared by Rene' Langis, Program Biologist, Santa Clara Valley Water District, dated December 2001 and subsequent Corps approved revisions.

Further Information:

1. Congressional Authorities: You have been authorized to undertake the activity described above pursuant to:

( ) Section 10 of the Rivers and Harbors Act of 1899 (33 U.S.C. 403).

(X) Section 404 of the Clean Water Act (33 U.S.C. 1344).

( ) Section 103 of the Marine Protection, Research and Sanctuaries Act of 1972 (33 U.S.C. 1413).

2. Limits of this authorization.

a. This permit does not obviate the need to obtain other Federal, state, or local authorizations required by law.

b. This permit does not grant any property rights or exclusive privileges.

c. This permit does not authorize any injury to the property or rights of others.

d. This permit does not authorize interference with any existing or proposed Federal project.

3. Limits of Federal Liability. In issuing this permit, the Federal Government does not assume any liability for the following:

a. Damages to the permitted project or uses thereof as a result of other permitted or unpermitted activities or from natural causes.

b. Damages to the permitted project or uses thereof as a result of current or future activities undertaken by or on behalf of the United States in the public interest.

c. Damages to persons, property, or to other permitted or unpermitted activities or structures caused by the activity authorized by this permit.

d. Design or construction deficiencies associated with the permitted work.

c. Damage claims associated with any future modification, suspension, or revocation of this permit.

4. Reliance on Applicant's Data: The determination of this office that issuance of this permit is not contrary to the public interest was made in reliance on the information you provided.

5. Reevaluation of Permit Decision. This office may reevaluate its decision on this permit at any time the circumstances warrant. Circumstances that could require a reevaluation include, but are not limited to, the following:

a. You fail to comply with the terms and conditions of this permit.

b. The information provided by you in support of your permit application proves to have been false, incomplete, or inaccurate (See 4 above).

c. Significant new information surfaces which this office did not consider in reaching the original public interest decision.

Such a reevaluation may result in a determination that it is appropriate to use the suspension, modification, and revocation procedures contained in 33 CFR 325.7 or enforcement procedures such as those contained in 33 CFR 326.4 and 326.5. The referenced enforcement procedures provide for the issuance of an administrative order requiring you to comply with the terms and conditions of your permit and for the initiation of legal action where appropriate. You will be required to pay for any corrective measures ordered by this office, and if you fail to comply with such directive, this office may in certain situations (such as those specified in 33 CFR 209.170) accomplish the corrective measures by contract or otherwise and bill you for the cost.

6. Extensions. General condition 1 establishes a time limit for the completion of the activity authorized by this permit. Unless there are circumstances requiring either a prompt completion of the authorized activity or a reevaluation of the public interest decision, the Corps will normally give favorable consideration to a request for an extension of this time limit.

Your signature below, as permittee, indicates that you accept and agree to comply with the terms and conditions of this permit.

Stanley M. Williams 4/23/2002

(Permittee) (Date)

This permit becomes effective when the Federal official, designated to act for the Secretary of the Army, has signed below.

5/7/2002

(District Engineer) Timothy S. O'Rourke, LTC, EN (Date)

When the structures or work authorized by this permit are still in existence at the time the property is transferred, the terms and conditions of this permit will continue to be binding on the new owner(s) of the property. To validate the transfer of this permit and the associated liabilities associated with compliance with its terms and conditions, have the transferee sign and date below.

(Transferee) (Date)

Attachment 1.
Lower Silver Creek Watershed Project Description by Reach

Reach 1a
The two-stage earth channel is 900 feet long and includes a 400-foot section with gabion protection on the north bank and a 3-foot deep sediment transport channel. Native riparian trees and shrubs would be planted on the south bank for shade. Bio-engineering techniques for slope stabilization and habitat value enhancement will be implemented where feasible. One 2-foot, 5-foot high grade control structure with a low-flow notch will be incorporated. A meandering base-flow channel would form within the sediment transport channel. The channel invert elevation would be 6 inches to 12 inches above water table to support emergent marsh. The maintenance road, constructed 3 feet above the channel invert would be made of semi-permeable material (either a Class 2 aggregate base or of 6 to 8 inch deep honeycomb cells filled with granular soil). Approximately 18,000 cubic yards of earth would be excavated.

Reach 1b
The vegetated gabions channel with earthen invert would be 300 feet long. As with other earth bottom reaches, emergent marsh vegetation would be allowed to naturally colonize the bottom of the sediment transport channel. Shaded riverine aquatic (SRA) vegetation would be planted along the south bank of the sediment transport channel and upland trees and shrubs would be planted on top of both banks. A meandering base-flow channel would form within the sediment transport channel. A new bridge is planned at Wooster Avenue. Approximately 19,000 cubic yards of earth would be excavated.

Reach 1c
The vegetated gabions channel (due to tight 120-foot right-of-way) with earth bottom would be 1,100 feet long. The low flows would be concentrated in a naturally formed meandering base-flow channel. Native upland trees, shrubs, and vines would be planted along top of bank, vines and grasses on the gabions, and trees and shrubs would be planted at the base of the south bank gabions to provide shaded riverine aquatic cover. A meandering base-flow channel would form within the sediment transport channel. Approximately 22,100 cubic yards of earth would be excavated.

Reach 1d
The two-stage earth channel with 4-foot high floodwalls for freeboard would be 1,200 feet long and include a 600-foot section with vegetated gabions on the north bank. Sediment transport channel width would be 62 feet and right-of-way would be 170 feet. Riparian species would be planted for shade and habitat. Emergent wetland vegetation would naturally colonize the sediment transport channel and maintenance access would be constructed 6 feet above the channel bottom. A meandering base-flow channel would form within the sediment transport channel. Approximately 35,500 cubic yards of earth would be excavated.

Reach 2
The architecturally treated rectangular concrete channel, due to very tight 65-foot right-of-way, would be 1,200 feet long. The channel would include a low-flow channel to allow continuity of base flows. Sediment would be periodically removed. Native trees and vines would be planted on top of the south bank to shade the channel. Approximately 10,500 cubic yards of earth would be excavated.

Reach 3a
The earth channel would be 1,600 feet long. Emergent marsh vegetation would naturally colonize the bottom of the sediment transport channel. Floodwalls (approx. 4 feet high) would be constructed for freeboard on the residential side. A combination of floodwalls and overland flow and park access would be constructed on the other side. Riparian trees and shrubs would be planted on south bank. A meandering base-flow channel would form within the sediment transport channel. Approximately 21,100 cubic yards of earth would be excavated.

Reach 3b
The architecturally treated rectangular concrete channel, due to very tight 68-foot right-of-way, would be 925 feet long. The channel would include a low-flow channel to allow continuity of base flows. Native trees, shrubs, and vines would be planted along top of banks. Approximately 22,700 cubic yards of earth would be excavated.

Reach 3c
The existing trapezoidal concrete channel in a very narrow 45-foot right-of-way would be replaced with a 725-foot rectangular concrete channel (similar to Reach 3b) followed by a 475 foot-long section with gabion protection on the right bank and a 2:1 earth slope on the left bank, 95 feet long made possible by a planned purchase of additional right-of-way. The gabion/earth bank section would include a naturally formed base-flow channel, a sediment transport channel, and riparian vegetation on the south bank. Approximately 30,600 cubic yards of earth would be excavated.

Reach 3d
The gabion/earth bank channel, made possible through the planned purchase of additional right-of-way, would be 300 feet long and would include a naturally formed base-flow channel, a sediment transport channel, and riparian vegetation on the south bank. Approximately 19,500 cubic yards of earth would be excavated.

Reach 3e
The earth channel with 60 to 75-foot bottom width and 130-foot right-of-way would be 655 feet long. Riparian habitat would be planted along the south bank. Emergent marsh vegetation would naturally colonize the bottom of the sediment transport channel. Floodwalls would be installed for freeboard on the residential side. A combination of floodwalls and overland flow and park access would be created on the other side. The fish resting pool would be located away from public access to limit predation. Riparian trees and shrubs would be planted on south bank; native upland trees would be planted on top of the north bank. A meandering base-flow channel would naturally form within the sediment transport channel. Kammerer Avenue Bridge would be replaced with pedestrian bridge. Approximately 20,000 cubic yards of earth would be excavated.

Reach 3f
The earth channel with 110-foot bottom width and 170-foot right-of-way would be 900 feet long. Additional right-of-way would be purchased from the nearby school. Riparian habitat, including SRA cover, would be planted along the south bank. Emergent marsh vegetation would naturally colonize the bottom of the sediment transport channel. An environmental classroom and channel access road would be constructed on the south bank. Approximately 23,000 cubic yards of earth would be excavated.

Reach 4a
The U-frame concrete channel with sediment trap would be 220 feet long. The existing concrete channel would be removed. Trees and shrubs would be planted on top of both banks. A new bridge

would be built on Jackson Avenue. Four-foot high floodwalls required for freeboard would be constructed. Approximately 3,800 cubic yards of earth would be excavated.

Reach 4b

The hybrid vegetated block wall and/or gabion lined channel with earthen invert would be 2,200 feet long. Emergent marsh vegetation would naturally colonize the bottom of the sediment transport channel. Riparian trees and shrubs, providing SRA cover, would be planted along the south bank. Four-foot high floodwalls required for freeboard would be constructed. A meandering base-flow channel would form in the sediment transport channel bottom. Approximately 28,000 cubic yards of earth would be excavated.

Reach 4c

The hybrid vegetated block wall and/or gabion protected channel with earthen invert would be 1,700 feet long. Bottom width would be 34 feet and right- of-way would be 62 feet. Emergent marsh vegetation would naturally colonize the bottom of the sediment transport channel. A maintenance access road would be constructed approximately 2 feet above the channel bottom. Riparian trees and shrubs would be planted along the south bank of the sediment transport channel. A meandering base-flow channel would form in the sediment transport channel bottom. Four-foot high floodwalls required for freeboard would be constructed. Approximately 8,000 cubic yards of earth would be excavated.

Reach 5a

The hybrid vegetated block and/or gabion protected wall channel with earthen invert would be 240 feet long. Emergent marsh vegetation would naturally colonize the bottom of the sediment transport channel. A maintenance access road would be constructed approximately 2 feet above the channel bottom. Riparian trees and shrubs would be planted along the south bank of the sediment transport channel. A meandering base-flow channel would form in the sediment transport channel bottom. The North Babb Creek channel transition structure would be constructed. Approximately 2,700 cubic yards of earth would be excavated

Reach 5b

The hybrid vegetated block wall and/or gabion protected channel with earthen invert would be 800 feet long. The bottom width would be 37 feet and right-of-way would be 65 feet. Emergent marsh vegetation would naturally colonize the bottom of the sediment transport channel. A maintenance access road would be constructed approximately 2 feet above the channel bottom. Riparian trees and shrubs would be planted along the south bank of the sediment transport channel. A meandering base-flow channel would form in the sediment transport channel bottom. Trees and shrubs would be planted on top of the north bank. Four-foot high floodwalls required for freeboard would be constructed. Approximately 7,000 cubic yards of earth would be excavated.

Reach 5c

The hybrid vegetated block wall and/or gabion protected channel with earthen invert would be 1,830 feet long. The bottom width would be 50 feet and right-of-way would be 80 feet. Emergent marsh vegetation would naturally colonize the bottom of the sediment transport channel. A maintenance access road would be constructed approximately 2 feet above the channel bottom. Riparian trees and shrubs would be planted along the south bank of the sediment transport channel. A meandering base-flow channel would form in the sediment transport channel bottom. Four-foot high floodwalls required for freeboard would be constructed. Approximately 16,500 cubic yards of earth would be excavated

Reach 6a

The hybrid vegetated block wall and/or gabion protected channel with earthen invert would be 1,480 feet long. The bottom width would be 34 feet and right-of-way would be 62 feet. Emergent marsh vegetation would naturally colonize the bottom of the sediment transport channel. A maintenance access road would be constructed approximately 2 feet above the channel bottom. Riparian trees and shrubs would be planted along the south bank of the sediment transport channel. A meandering base-flow channel would form in the sediment transport channel bottom. Four-foot high floodwalls required for freeboard would be constructed. Approximately 25,500 cubic yards of earth would be excavated.

Reach 6b

The channel with hybrid vegetated block wall and/or gabion protection on the north bank and 2:1 earth slope on the south bank channel and earthen invert would be 2,540 feet long. The bottom width would be 80 feet and right-of-way would be 105 feet. Emergent marsh vegetation would naturally colonize the bottom of the sediment transport channel. A maintenance access road would be constructed approximately 2 feet above the channel bottom. Riparian trees and shrubs would be planted along the south bank. A meandering base-flow channel would form in the sediment transport channel bottom. Four-foot high floodwalls required for freeboard would be constructed. Approximately 53,500 cubic yards of earth would be excavated.

DEPARTMENT OF THE ARMY
SAN FRANCISCO DISTRICT, U.S. ARMY CORPS OF ENGINEERS
1455 MARKET STREET
SAN FRANCISCO, CALIFORNIA 94103-1398

FEB 22 2010

Regulatory Division

SUBJECT: File Number 24317S

TIME EXTENSION

Mr. Dennis Cheong
Santa Clara Valley Water District
5750 Almaden Expressway
San Jose, California 95118-3686

Dear Mr. Cheong:

This letter is written in response to your request dated December 24, 2009 for a time extension of Permit Number 24317S, issued by this office on May 7, 2002 authorizing you to construct a flood damage reduction and riparian restoration project on Lower Silver Creek in the City of San Jose, Santa Clara County, California.

You are hereby granted Department of the Army authorization to extend to February 1, 2015 the completion date specified in General Condition No. 1 of Department of the Army Permit Number 24317S. If the work authorized is not completed on or before February 1, 2015, this authorization, if not previously revoked or specifically extended, shall automatically expire. Except for General Condition No. 1, all conditions of the original permit remain in full force and effect.

Should you have any questions regarding this matter, please call Bob Smith of our Regulatory Division at (415) 503-6792. Please address all correspondence to the Regulatory Division and refer to the File Number at the head of this letter.

Sincerely,

for Laurence M. Farrell
Lieutenant Colonel, US Army
Commanding

APPENDIX 3D-2

401 CERT - RWQCB

CALIFORNIA REGIONAL WATER QUALITY CONTROL BOARD
SAN FRANCISCO BAY REGION

ORDER R2-2002-0012

WASTE DISCHARGE REQUIREMENTS AND WATER QUALITY CERTIFICATION FOR:

SANTA CLARA VALLEY WATER DISTRICT, LOWER SILVER CREEK WATERSHED PROJECT, CITY OF SAN JOSE, SANTA CLARA COUNTY

The California Regional Water Quality Control Board, San Francisco Bay Region, hereinafter Board, finds that:

1. The Santa Clara Valley Water District (hereinafter Discharger) applied to the Board on August 14, 2001, for Water Quality Certification under Section 401 of the Clean Water Act for the Lower Silver Creek Watershed Project (hereinafter the Project). The Discharger has applied to conduct activities to provide 100-year flood protection along Lower Silver Creek, a tributary to Coyote Creek, which flows into the southern extent of San Francisco Bay.

2. The floodplain of Lower Silver Creek is 95% developed with residential and commercial property and will be inundated by floodwaters during a 100-year flood event.

Project Description, Impacts and Mitigation

3. Lower Silver Creek currently flows in an excavated diversion channel that was built in the early 1950's to drain wetlands and expand agricultural lands around Lake Cunningham in the City of San Jose. The channel has been modified several times to improve flood control.

4. Channel banks in Lower Silver Creek are composed of low cohesion alluvial materials that are unstable and prone to excessive erosion. Riparian vegetation is minimal in the Project reaches.

5. The Project would involve modifications to approximately 4.6 miles (24,442 linear feet) of stream channel between the Creek's downstream confluence with Coyote Creek and the upstream extent where the Creek reaches the upstream end of the Cunningham Avenue crossing in the City of San Jose. Modifications to Coyote Creek would not occur as part of the Project.

6. The Project has been divided into six major reaches and will be constructed in four phases over a 5-year period beginning with reaches 1 and 2 at the downstream extent and ending with reaches 5 and 6 at the upstream extent.

7. The Project will result in the excavation and removal of 450,000 cubic yards of material.

8. Existing channel banks and maintenance roads will be excavated to widen the channel to the maximum extent to accommodate the reconfiguration of the channel cross-section to provide improved channel geometry. Where right-of-way is sufficient, the constructed channel cross-section will include a sediment transport channel that is designed to transport discharge and sediment of channel forming flows that are expected to occur at approximately 1.5-year intervals. The sediment transport channel design emulates natural active channel cross-sectional geometry and is expected to reduce erosion and sedimentation, and resulting maintenance activities of the existing channel. Cross-sectional dimension and sinuosity of the low-flow channel will be allowed to form naturally within the sediment transport channel. A single maintenance road of pervious material will be located in the channel floodplain, above the sediment transport channel.

9. Rock erosion barriers will be buried along the outside of the sediment transport channel in earth bottomed reaches where lateral erosion and migration of the bed and bank(s) could cause damage to riparian vegetation, the maintenance road, and top-of-bank structures.

10. Paved maintenance ramps will be constructed on the upstream and downstream side of 13 road crossings to provide access to the in-channel maintenance road. All ramps will be located on the left bank (looking upstream) to avoid impacts to Project plantings and the sediment transport channel.

11. Conceptual channel cross-sections have been submitted by reach, as part of the Project application (Appendix A).

12. Modifications, by reach, include the following:

    a. Reach 1 is approximately 3700 feet long and will be modified from an existing earth trapezoidal channel to an earth-bottomed, two-stage channel with a sediment transport channel, areas for wetlands, floodplain, riparian plantings, and a raised maintenance road. Gabions will be used where banks are over steepened. Floodwalls will be placed at the top of banks through part of the reach. Combining the length of all bank treatments, the total length of earthen banks will equal 2950 linear feet, and gabions will equal 4450 linear feet over a total of 7400 linear feet of channel bank.

    b. Reach 2 is approximately 1300 feet long and will be modified from an earth trapezoidal channel to a rectangular concrete channel with a low-flow channel.

    c. Reach 3 is approximately 7080 feet long and is currently composed of 4360 feet of earth trapezoidal channel and 2720 feet of concrete trapezoidal channel. The Project will result in 4480 linear feet of earth-bottomed, two-stage channel with a sediment transport channel, areas for wetlands, floodplain, riparian plantings, and a raised maintenance road and 2600 linear feet of rectangular concrete channel with low-flow channel. Gabions will be used where banks are over steepened. Floodwalls will be placed at the top of banks through part of the reach. Combining the linear feet of all bank treatments, the total length of earthen banks will equal 7685 linear feet, gabions

will equal 2550 linear feet, and concrete will equal 5200 linear feet over a total length of 14,160 linear feet of channel bank.

d. Reach 4 is approximately 3820 feet long and is currently composed of 3600 feet of earth trapezoidal channel and 220 feet of concrete trapezoidal channel. The Project will result in 3600 feet of earth-bottomed, two-stage channel with a sediment transport channel, areas for wetlands, floodplain, riparian plantings, and a raised maintenance road and 220 feet of U-frame concrete with low-flow channel. Gabions and/or concrete blocks will be used where banks are over steepened. Floodwalls will be placed at the top of banks through part of the reach. Combining the linear feet of all bank treatments, the total length of gabions and/or concrete blocks will equal 7200 linear feet, and concrete will equal 440 linear feet over a total length of 7640 linear feet of channel bank.

e. Reach 5 is approximately 3125 feet long and is currently composed of 2870 feet of earth trapezoidal channel and 250 feet of concrete culvert road crossing. The Project will result in 3025 feet of earth-bottomed, two-stage channel with a sediment transport channel, areas for wetlands, floodplain, riparian plantings, and a raised maintenance road and new 100-foot long concrete culvert with low-flow channel road crossing. Gabions and/or concrete blocks will be used where banks are over steepened. Floodwalls will be placed at the top of banks through part of the reach. Combining the linear feet of all bank treatments, the total length of gabions and/or concrete blocks will equal 6050 linear feet, and concrete will equal 200 linear feet over a total length of 6250 linear feet of channel bank.

f. Reach 6 is approximately 4170 feet long and is currently composed of earth trapezoidal channel. The Project will result in 4170 feet of earth-bottomed, two-stage channel with a sediment transport channel, areas for wetlands, floodplain, riparian plantings, and a raised maintenance road. Gabions and/or concrete blocks will be used where banks are over steepened. Floodwalls will be placed at the top of banks through part of the reach. Combining the linear feet of both channel banks, the total length of earthen banks will equal 2600 linear feet, and gabions will equal 5740 linear feet over a total length of 8340 linear feet of channel bank.

13. The potential and existing beneficial uses for Lower Silver Creek, as a tributary to Coyote Creek, as set forth in the Basin Plan include:
    a. Cold Freshwater Habitat
    b. Fish Migration
    c. Preservation of Rare and Endangered Species
    d. Water Contact Recreation
    e. Noncontact Water Recreation
    f. Fish Spawning
    g. Warm Freshwater Habitat
    h. Wildlife Habitat

14. Project construction will impact the following beneficial uses of Lower Silver Creek:

a. Noncontact Water Recreation
b. Warm Fresh Water Habitat
c. Wildlife Habitat

15. The Basin Plan lists the following beneficial uses for the Santa Clara Valley and Coyote Groundwater Basins which includes the Lower Silver Creek Watershed:
    a. Municipal and Domestic Water Supply
    b. Industrial Process Water Supply
    c. Industrial Service Water Supply
    d. Agricultural Water Supply

16. Project construction is unlikely to impact beneficial uses of the Lower Silver Creek Watershed's groundwater.

17. Project impacts will result in the loss of 4.7 acres of in-stream, freshwater wetlands and 4.1 acres of open waters of the State.

18. The Discharger will mitigate impacts to beneficial uses resulting from Project activities through the implementation of the Lower Silver Creek Watershed Project, Updated Mitigation and Monitoring Program, dated August 2001, and the December 4, 2001, addendum (Appendix B).

19. Mitigation for Project impacts includes creation of 12.7 acres of in-stream freshwater wetlands and open waters within the Project reaches of Lower Silver Creek (Table 1). The mitigation measures will be located in the sediment transport channel. Because the sediment transport channel and the naturally formed low-flow channel are dynamic elements of the Project, the individual wetland and open water acreage amounts are not predicted, and may fluctuate from year to year.

20. To compensate for impacts to 2 acres of existing non-jurisdictional upland trees and shrubs, the Discharger will plant 2 acres of native riparian upland trees and shrubs and 4 acres of native riparian top-of-bank plantings within the Project reaches.

21. Additional enhancement measures to improve beneficial uses in Lower Silver Creek include planting approximately 5 acres of shaded riverine aquatic habitat (SRA) and riparian vegetation. SRA will be planted in earth bottomed channel reaches that can accommodate increased channel roughness due to vegetation and will be located along a bench above the sediment transport channel on the right bank (looking upstream) to optimize shading of the low-flow channel. Riparian vegetation will be planted to top of bank in earth-lined sections.

22. The Discharger will make efforts to vegetate amongst all gabions and concrete blocks used for channel banks; however vegetation success is not guaranteed for gabion or concrete block slopes steeper than 1:1.

Table 1. Lower Silver Creek Watershed Project
Impacts and Mitigation

Jurisdictional Area	Impacts (acres)	Mitigation (acres)
Wetlands	**4.7**	**not estimated***
Open Waters	**4.1**	**not estimated***
Total	**8.8**	**12.7**

*Area may vary due to physical changes in the dynamic sediment transport channel, with a minimum of 4.7 acres of wetland mitigation required over the life of the Project mitigation program.

23. The Discharger has submitted sediment and soil characterization reports, dated October and November 2000, and March and July 2001, for approval by the Board's Executive Officer. The reports are intended to characterize soil and sediment prior to excavation to determine appropriate disposal and/or reuse and to assure no constituents of concern in the excavated channel.

24. The Discharger has submitted its Final Self-Monitoring Program Water Quality Sampling Plan for the San Francisco Bay Region Multi-Year Stream Maintenance Program (Plan) dated December 2001 (Appendix C). The methods and protocols of the Verification and Compliance Monitoring section of the Plan will apply to the Project. The purpose of the Plan is to identify sampling and analysis procedures, quality assurance/quality control protocols, and record keeping and reporting procedures to be followed to document compliance with the requirements of this Order. The Plan may be amended with the written approval of the Executive Officer.

25. The Discharger has submitted its Best Management Practices for the Lower Silver Creek Watershed Project dated December 2001 (Appendix D). These best management practices (BMPs) will be applied during project construction. Post-project maintenance will comply with all applicable BMPs in the Final Best Management Practices Manual for the San Francisco Bay Area Region Multi-Year Stream Maintenance Program (BMP Manual) dated December 2001 (Appendix D), upon approval. The BMP Manual identifies practices to be implemented by the Discharger that will minimize impacts to water quality and beneficial uses of waters of the State during sediment removal, vegetation management, bank stabilization, and specific minor maintenance activities. The BMP Manual may be revised with the written approval of the Executive Officer.

26. The Discharger has submitted its Lower Silver Creek Watershed Project Updated Mitigation and Monitoring Program (Program) dated August 2001, and the December 4, 2001 addendum (Appendix B). The purpose of the Program is to identify mitigation to compensate for impacts to wetlands and waters of the State resulting from the Project. The Program also describes Project enhancement measures, and monitoring and success criteria for mitigation and enhancement measures included in the Project.

27. The Discharger has submitted its Lower Silver Creek Watershed Project Maintenance Plan (Plan) dated August 2001 (Appendix E). The purpose of the plan is to provide maintenance guidelines for all activities not covered under the Discharger's Multi-Year Stream Maintenance Program (SMP) that is currently under development. The Plan also includes maintenance prescriptions and protocols specific to the long-term operation and

function of the Project. Upon approval, the SMP will provide conditional approval for sediment removal, vegetation management, bank erosion repair, and a list of specific minor maintenance activities in Santa Clara County streams, including Lower Silver Creek, for a period of 10 years.

28. A discharge of water (effluent) could result from the handling and placement of excavated material at an off-site temporary stockpile site (if used). Any effluent discharged during material placement and temporary storage is referred to as "decant water." This Order regulates effluent discharged as a result of excavated material placement and temporary storage as described in Provision 6.

29. Certification is conditioned upon total payment of any fee required under 23 CCR and owed by the Discharger.

Regulatory Framework

30. The Board, on June 21, 1995, adopted, in accordance with Section 13244 et. seq. of the California Water Code, a revised Water Quality Control Plan, San Francisco Bay Basin (Basin Plan). The State Water Resources Control Board and the Office of Administrative Law approved this updated and consolidated revised Basin Plan on July 20, 1995, and November 13, 1995, respectively. A summary of the revisions to the regulatory provisions is contained in 23 CCR 3912. The Basin Plan defines beneficial uses and water quality objectives for waters of the State, including surface waters and groundwater. This Order is in compliance with the Basin Plan.

31. The Basin Plan Wetland Fill Policy establishes that there is to be no net loss of wetland acreage and no net loss of wetland value when a project and any proposed mitigation are evaluated together, and that mitigation for wetland fill projects is to be located in the same area of the Region, wherever possible, as the project. The Policy further establishes that wetland disturbances should be avoided whenever possible, and if not possible, should be minimized, and only after avoidance and minimization of impacts should mitigation for lost wetlands be considered. The Discharger has submitted documentation to show that appropriate effort was made to avoid and then to minimize wetland disturbance, as required by the Basin Plan. The Board concurs with this finding.

32. The California Environmental Quality Act (CEQA) requires all discretionary projects approved by public agencies to be in full compliance with CEQA, and requires a lead agency to prepare an appropriate environmental document for such projects. In July 1983, the Discharger, as a public agency undertaking a project subject to CEQA, adopted a Final Environmental Impact Report. In December 2000, the Discharger adopted a Negative Declaration for the Project (SCH # 2000102034) to reflect modifications to the original design that reduced project impacts and improved stream habitat. On October 2, 2001, the Discharger adopted the Lower Silver Creek Watershed Project 1998 Plan Update Addendum to the Negative Declaration and Environmental Assessment/Finding of No Significant Impact to reflect further project modifications to improve the channel design and increase stream habitat. The Regional Board, as a

responsible agency, has considered the Project's potential environmental impacts as set forth in these environmental documents. The Regional Board finds that the Project, with implementation of the water quality mitigation measures described in this Order, will not have a significant impact on water quality.

33. Pursuant to Title 23, California Code of Regulations Section 3857 and 3859, the Board is issuing Waste Discharge Requirements (WDRs) and Water Quality Certification for the Project.

34. The Regional Board has notified the Discharger and interested parties of its intent to issue WDRs and Water Quality Certification for the Project.

35. The Board, in a public meeting, heard and considered all comments pertaining to the discharge.

IT IS HEREBY ORDERED that, with the implementation of the following conditions and requirements, the Board certifies that the Project described herein will comply with the applicable provisions of sections 301, 302, 303, 306 and 307 of the Clean Water Act. It is further ordered that, pursuant to California Water Code sections 13263 and 13267, Discharger shall comply with the following:

A. Discharge Prohibitions

1. Project activities that result in the direct discharge of waste, as described in Section 13050(d), of the California Water Code, from construction sites to surface waters or surface water drainage courses are prohibited.

2. Project activities subject to these requirements shall not cause a nuisance as defined in Section 13050(m) of the California Water Code.

3. Excavated material shall remain within designated disposal areas at all times. The designated disposal areas are: (a) an off-site temporary or permanent location in accordance with federal and state regulations, (b) any on-site temporary location provided material will be isolated and contained to prevent impacts to jurisdictional waters, and beneficial uses, or (c) a permitted landfill.

4. The discharge of decant water from any temporary excavated material stockpile or storage areas to surface waters or surface water drainage courses outside of the active excavation site is prohibited except where BMPs are adopted to comply with effluent and receiving water limitations.

5. Groundwater beneficial uses shall not be degraded as a result of the Project.

B. Effluent Limitations

Wastewater (decant water and/or runoff water), and diverted water that drains to waters of the State shall not exceed the following limits of quality at any time:

pH: 0.5 pH units above or below ambient levels
Settleable matter: 1.0 ml/l/hr
Dissolved sulfide: 0.1 mg/l

C. <u>Receiving Water Limitations</u>

1. The Project's activities shall not cause:

   a. The temperature of any waters providing cold or warm freshwater habitat to be increased by more than 5º F above natural temperatures unless a qualified biologist can demonstrate that such alteration in temperature does not adversely affect beneficial uses.

   b. Floating, suspended or deposited macroscopic particulate matter or foam in waters of the State at any place more than 100 feet from the point of discharge of diverted flow or decant water.

   c. Alteration of apparent color beyond present natural background levels in waters of the State at any place more than 100 feet from the point of discharge of diverted flow or decant water.

   d. Visible floating, suspended, or deposited oil or other products of petroleum origin in waters of the State at any place more than 100 feet from the point of discharge of diverted flow or decant water.

   e. The diverted flow or decant water shall not cause waters of the State to exceed the following water quality limits at 100 feet downstream from the point of discharge of diverted flow or decant water, as defined under the receiving water limitations in the Discharger's Self-Monitoring Program Water Quality Sampling Plan:

      i. Dissolved Oxygen: 5.0 mg/l minimum in Lower Silver Creek and 7.0 mg/l in Coyote Creek. When natural factors cause lesser concentrations, then this discharge shall not cause further reduction in the concentration of dissolved oxygen.

      ii. pH: A variation of natural ambient pH by more than 0.5 pH units.

      iii. Toxic or other deleterious substances: None shall be present in concentrations or quantities which may cause deleterious effects on aquatic biota, wildlife or waterfowl, or which render any of these unfit for human consumption either at levels created in the receiving waters or as a result of biological concentrations.

2. Turbidity of the waters of the State, as measured in NTUs, 100 feet downstream from the point of discharge of diverted flow and decant water, as defined under the receiving water limitations in the Discharger's Self-Monitoring Program Water Quality Sampling Plan, shall not increase above background levels by more than the following at any time:

Receiving Waters Background	Incremental Increase
< 50 units	5 NTUs
≥ 50 units	10% of background, maximum

D. Provisions

Project Provisions

1. Project impacts shall not be greater than listed in Table 1 of this Order.

2. The Discharger shall not modify the channel of Coyote Creek or divert Coyote Creek flows as part of the Project

3. Project-related activities in jurisdictional areas shall not occur from October 15th to April 15th unless notification and approval of the Executive Officer for a later date is obtained in advance.

4. Disturbed soil related to Project activities will be stabilized, winterized, and revegetated with appropriate native vegetation or appropriate non-native sterile seed mix no later than October 15th without notification and approval of the Executive Officer.

5. The Discharger shall implement and comply with the following submittals:
   a. Final Self-Monitoring Program Water Quality Sampling Plan for the San Francisco Bay Area Region Multi-Year Stream Maintenance Program dated December 2001,
   b. Best Management Practices for the Lower Silver Creek Watershed Project dated December 2001,
   c. Lower Silver Creek Watershed Project, Updated Mitigation and Monitoring Program dated August 2001, and the December 4, 2001 addendum, and
   d. Lower Silver Creek Watershed Project Maintenance Plan dated August 2001.

6. If, based on the reports submitted as described in Finding 23, additional soil and sediment characterization data is warranted, the Discharger shall submit an adequate soil and sediment characterization plan for Executive Officer approval 60 days prior to excavation, and analytical results 30 days prior to excavation.

7. The Discharger may temporarily stockpile excavated material prior to disposal or reuse provided that appropriate BMPs are implemented to protect water quality and beneficial uses. The excavated material may be stockpiled on-site for Project reuse or for loading into trucks for off-site disposal. The Discharger shall contain temporary on-site stockpiled material so that runoff, sediment, or decant water from the excavated material will not contact waters of the State outside the active excavation site without first being treated to meet receiving water limitations described in this Order.

8. The discharge of any hazardous, designated or non-hazardous waste as defined in Title 27, Division 2, Subdivision 1, Chapter 2 of the California Code of Regulations shall be conducted in accordance with applicable state and federal laws and regulations.

9. The Discharger shall remove and properly dispose of any wastes that are discharged at any sites in violation of this Order.

10. The Discharger shall file with the Board a report of any material change or proposed change in the character, location, or quantity of this waste discharge. For the purpose of these requirements, this includes any proposed change in the boundaries of the designed disposal areas.

11. A delineation of existing jurisdictional waters of the State and United States at any temporary excavated material disposal site verified according to U.S. Army Corps of Engineers delineation standards shall be conducted by a qualified biologist prior to the construction of an impoundment at the site and submitted to the Executive Officer prior to the disposal of excavated material at the site(s).

12. The Discharger shall ultimately dispose of dewatered excavated material at a permitted landfill, upland disposal site, or at a reuse site in accordance with applicable state and federal regulations including applicable provisions of this Order.

13. The Discharger will vegetate amongst all gabions and concrete blocks with native riparian species and provide maintenance until vegetation is established, unless the Discharger provides an adequate determination that vegetation will jeopardize Project objectives, or that site conditions will not support vegetation. Slopes that are steeper than 1:1 will be vegetated to the extent possible but successful establishment will not be required.

14. The Discharger shall implement and comply with BMPs during the entirety of the Project.

15. The Discharger shall implement BMPs to prevent pollutants from draining into waters of the State, including the discharge of pollutants from temporary stockpiles of excavated material, during transport of excavated material, from application of herbicides and pesticides, and from vegetation and construction related materials.

16. The Discharger shall divert any flow at the site (hereinafter diverted flow) around the active construction site in a non-erosive manner using a pipe, or other BMP measure such that the flow does not flow across the active construction site.

17. The Discharger shall halt work activities if dead or dying fish or fish exhibiting stress are observed within 1,000 feet of work activity or discharge. The Discharger shall immediately assign a qualified biologist to investigate the cause of the problem and define an acceptable corrective action plan, if the cause is related to Project activities. The Discharger shall immediately report all incidences involving dead or dying fish or fish exhibiting stress, as well as prescribed action plans to the Board and the California Department of Fish and Game.

18. The Discharger shall ensure that all individuals working on the Project at the site, including any and all contractors and sub-contractors, are familiar with the contents and requirements of this Order, and all relevant plans and BMPs, and shall keep copies of these documents at Project work site so as to be readily available at all times to site operating personnel and workers.

19. The Discharger is responsible for correcting any and all problems, which arise in the event of Project failure, including a failure to meet the conditions of this Order, that result in an unauthorized release of waste or wastewater.

20. The Discharger shall permit the Board or its authorized representative, upon presentation of credentials:

    a. Entry on to the premises on which Project activities are planned or underway, wastes are located, or in which records are kept.

    b. Access to copy any records required to be kept under the terms and conditions of this Order.

    c. Access to inspect any treatment equipment, monitoring equipment or monitoring method required by this Order.

    d. Access to sample any discharge or surface water covered by this Order.

Mitigation, Monitoring and Reporting Provisions

21. The Discharger shall implement and conduct monitoring according to the Lower Silver Creek Watershed Project, Updated Mitigation and Monitoring Program (Program), dated August 2001, and the December 4, 2001, addendum. Any substantive changes to the Program or its addendum must be approved in writing in advance by the Executive Officer. In addition, the Discharger will sample dissolved oxygen (DO) in Coyote Creek, 100 feet upstream and downstream of the confluence with Lower Silver Creek to ensure that construction activities do not reduce DO concentrations in Coyote Creek below 7.0 mg/l or ambient conditions, whichever is lower.

22. To ensure no net loss of wetlands and to comply with the Basin Plan Wetland Fill Policy, the Discharger shall maintain a minimum of 4.7 acres of wetland mitigation over the life of the Project, regardless of the dynamic nature of the designed sediment transport channel.

23. If wetland mitigation has not developed in accordance with the performance criteria established in the Program by year 10 after completion of reach construction, the Discharger shall prepare a revised mitigation plan acceptable to the Executive Officer, addressing corrective action, outlining additional monitoring, or proposing new mitigation that will comply with the performance criteria. The revised mitigation plan will be submitted for Executive Officer approval no later than 90 days following the final 10-year monitoring report.

24. If riparian and SRA plantings do not meet the success criteria described in the Program by year 10 following revegetation of each Project phase, the Discharger shall prepare and submit for Executive Officer approval, a remedial action plan to meet success criteria.

25. Additional monitoring will be conducted to evaluate the condition of gabions, concrete blocks, and the elevated maintenance road. Monitoring locations should be selected to represent each sub-reach where such structures are located. Monitoring should consist of photographs, measurements of erosion, and qualitative assessments of structural conditions.

26. No later than 60 days prior to the start of construction for each of the four Project phases, the Discharger will submit 90% design plans to the Executive Officer.

27. The Discharger shall submit mitigation monitoring reports by January 1st of each year for years 1, 2, 3, 5, 7, and 10 following completion of each Project phase, or until the mitigation success criteria specified in the Program have been achieved. Monitoring reports for year 10 will include a notice of mitigation completion including a plan, acceptable to the Executive Officer, for long-term maintenance and management of the Project mitigation. After submittal of the acceptable notice of mitigation completion, submittal of annual mitigation monitoring reports is no longer required. Monitoring reports will be provided for the following:

    a. Sediment transport channel performance,
    b. Wetlands and open water mitigation,
    c. Upland plantings, and,
    d. Riparian and SRA enhancement plantings.

28. Additional reporting shall be submitted by January 1st of each year for years 1, 5, and 10 following completion of each Project phase, describing the general condition of gabions, concrete blocks, and the maintenance road within the Project reaches.

General Provisions

29. Certification is not intended and shall not be construed to apply to any activity involving a hydroelectric facility and requiring a FERC license or an amendment to a FERC license unless the pertinent certification application was filed pursuant to 23 CCR Subsection 3855(b) and that application specifically identified that a FERC license or amendment to a FERC license for a hydroelectric facility was being sought.
30. This Order does not authorize commission of any act causing injury to the property of another or of the public; does not convey any property rights; does not remove liability under federal, state or local laws, regulations or rules of other programs and agencies nor does this Order authorize the discharge of wastes without appropriate permits from other agencies or organizations.

31. The Discharger shall comply with all necessary approvals and/or permits for the Project from applicable government agencies, including, but not limited to, the California Department of Fish and Game and the United States Army Corps of Engineers, and submit copies of such approvals and/or permits to the Board's Executive Officer prior to Project implementation.

32. The Discharger shall comply with all of this Order in its entirety immediately upon adoption of this Order, unless otherwise provided in this Order.

33. Every certification action is subject to modification or revocation upon administrative or judicial review, including review and amendment pursuant to Section 13330 of the California Water Code and Section 3867 of Title 23 of the California Code of Regulations.

I, Loretta Barsamian, Executive Officer, do hereby certify that the foregoing is a full, complete and correct copy of an Order adopted by the California Regional Water Quality Control Board, San Francisco Bay Region, on January 23, 2002.

_____

Loretta Barsamian
Executive Officer

Appendices:

Appendix A, Lower Silver Creek Watershed Project Conceptual Cross-Sections by Reach,
Appendix B, Lower Silver Creek Watershed Project Updated Mitigation and Monitoring Program dated August 2001, and the December 4, 2001, addendum,
Appendix C, Final Self-Monitoring Program Water Quality Sampling Plan for the San Francisco Bay Region Multi-Year Stream Maintenance Program dated December 2001,
Appendix D, Best Management Practices for the Lower Silver Creek Watershed Project dated December 2001, and Final Best Management Practices Manual for the San Francisco Bay Area Region Multi-Year Stream Maintenance Program dated December 2001, and,
Appendix E, Lower Silver Creek Watershed Project Maintenance Plan dated August 2001.

APPENDIX 3D-3

1600 SSA - CDFG

California Natural Resources Agency
DEPARTMENT OF FISH AND GAME
Bay Delta Region
Post Office Box 47
Yountville, California 94599
(707) 944-5520
www.dfg.ca.gov

ARNOLD SCHWARZENEGGER, Governor
JOHN McCAMMAN, Director

May 18, 2010

Katherine Oven
Santa Clara Valley Water District
5750 Almaden Expressway
San Jose, CA 95118

Subject: Amendment of Lake or Streambed Alteration Agreement
Notification No. 1600-2001-0132-R3
Lower Silver Creek

Dear Ms. Oven:

The Department of Fish and Game (Department) has received your request to amend Lake or Streambed Alteration Agreement 1600-2001-0132-R3 (Agreement) and the required fee in the amount of $560.25 for a major amendment. Table 1 describes the proposed project elements as of May 2010:

TABLE 1
Reach by Reach Description of Proposed Project Improvements
Lower Silver Creek Plan

Reach	Stationing	Approx. Length (LF)	Proposed Cross-Section Type and Transitions
4a	127+90 – 130+00	210	Concrete U-frame with 2-foot deep low flow channel/sediment collection area.
Transition	130+40 – 133+00	260	Bank transition at Jackson Rd with earthen channel bottom for ~ 150 LF, 90 LF concrete box culvert (with ~20 LF apron).
4b	133+00 – 154+00	2,100	Earthen channel with 1.5:1 grass-covered slope on both sides with riparian vegetation on south bank including a 5-foot vegetated bench. Top of bank future recreational trail opportunity. Relocation of gas utility pipeline at Dobern Bridge location. Rip-rap protection at gas utility pipe crossing ~ 60 LF, relocation might require the pipes to be concrete encased. Raising of the existing Dobern Pedestrian Bridge by approx. 2.5 feet.
Transition	154+00 - 157+00	300	200 LF concrete box culvert at Capitol Expy (with ~100 LF apron).

TABLE 1
Reach by Reach Description of Proposed Project Improvements
Lower Silver Creek Plan

Reach	Stationing	Approx. Length (LF)	Proposed Cross-Section Type and Transitions
4c/5a/5b	157+00 – 180+00	2,300	Soldier pile walls on both banks with a vegetated bench on south bank (with ~70 LF of grouted rock lining at North Babb). Replacement of Lyndale Pedestrian Bridge.
Transition	180+00 – 184+00	400	Bank transition with concrete box culvert at Story Rd (with apron ~190 LF).
5c	184+00 – 197+00	1,300	Soldier pile on north-east bank and riparian vegetated slope on south-west bank including a 5-foot vegetated bench.
Transition	197+00 – 201+00	400	Bank transition at Murtha Dr. Bridge.
6a	201+00 – 216+00	1,500	Soldier pile on north-east bank and riparian vegetated slope on south-west bank including a 5-foot vegetated bench (with ~ 100 LF of grouted rock lining at South Babb.
Transition	216+00 – 219+00	300	Bank transition at Moss Point Dr. and existing concrete box culvert.
6b	219+00 – 229+00	1,000	Earthen channel1.5:1 slopes on both banks; riparian vegetated slope on south-west bank including a 5-foot vegetated bench.
Transition	229+00 – 233+00	400	Bank transition at Ocala Ave. Bridge.
6b	233+00 – 245+00	1,200	Earthen channel1.5:1 slopes on both banks; riparian vegetated slope on south-west bank including a 5-foot vegetated bench.
Total (LF)		11,670	

Your request to amend the Agreement includes the changes as shown in Table 2:

TABLE 2
Qualitative Comparison of the Project Permitted under R-2001-0132 and 2010 Proposed Design Improvements
Lower Silver Creek Plan

Reach	Permitted Project	Proposed Design: 2010 Project
4a	Hybrid Vegetated Concrete Block Wall	U-Frame Concrete Channel w/ low flow

TABLE 2
Qualitative Comparison of the Project Permitted under R-2001-0132 and 2010 Proposed Design Improvements
Lower Silver Creek Plan

Reach	Permitted Project	Proposed Design: 2010 Project
	w/topsoil over rip-rap at invert.	channel/sediment collection area.
4b	Hybrid Vegetated Concrete Block Wall w/topsoil over rip-rap at invert, bioengineered rip-rap bank toe protection, and 5-foot riparian bench on one bank, native shrub plantings on top of bank inside the floodwalls.	Earthen Channel with 1.5:1 grassy earthen slopes, bioengineered rip-rap bank toe protection, riparian habitat on south bank including a 5-foot riparian bench, and an 8-foot set-back for an optional path (to be constructed by others) on the north side.
4c	Hybrid Vegetated Concrete Block Wall w/topsoil over rip-rap at invert, bioengineered rip-rap bank toe protection, and 5-foot riparian bench on one bank, native shrub plantings on top of bank inside the floodwalls.	Soldier Pile Wall Channel w/ earthen bottom, 5-foot riparian bench on south bank, and bioengineered rip-rap bank toe protection.
5a	Hybrid Vegetated Concrete Block Wall w/topsoil over rip-rap at invert, bioengineered rip-rap bank toe protection, and 5-foot riparian bench on one bank, native tree and shrub plantings on top of bank inside the floodwall.	Soldier Pile Wall Channel w/ earthen bottom, 5-foot riparian bench on south bank, and bioengineered rip-rap bank toe protection.
5b	Hybrid Vegetated Concrete Block Wall w/topsoil over rip-rap at invert, bioengineered rip-rap bank toe protection, and 5-foot riparian bench on one bank, native trees and shrub plantings on top of bank inside the floodwall.	Soldier Pile Wall Channel w/ earthen bottom, 5-foot riparian bench on south-west bank, and bioengineered rip-rap bank toe protection.
5c	Hybrid Vegetated Concrete Block Wall w/topsoil over rip-rap at invert, bioengineered rip-rap bank toe protection, and 5-foot riparian bench on one bank, native trees and shrub plantings on top of bank inside the floodwall.	Combined Earthen/Soldier Pile Wall Channel w/ earthen bottom, bioengineered rip-rap bank toe protection, and riparian habitat on south-west bank including a 5-foot riparian bench.

TABLE 2
Qualitative Comparison of the Project Permitted under R-2001-0132 and 2010 Proposed Design Improvements
Lower Silver Creek Plan

Reach	Permitted Project	Proposed Design: 2010 Project
6a	Hybrid Vegetated Concrete Block Wall w/topsoil over rip-rap at invert, bioengineered rip-rap bank toe protection, and 5-foot riparian bench on one bank, native trees and shrub plantings on top of bank inside the floodwall.	Combined Earthen/Soldier Pile Wall Channel w/ earthen bottom, bioengineered rip-rap bank toe protection, and riparian habitat on south-west bank including a 5-foot (minimum) riparian bench.
6b	Hybrid Vegetated Concrete Block Wall w/topsoil over rip-rap at invert, bioengineered rip-rap bank toe protection, and 2:1 earthen slope with riparian habitat on west bank inside floodwall.	Earthen Channel with grassy earthen slopes, bioengineered rip-rap bank toe protection, and riparian habitat on south-west bank including a 5-foot riparian bench.

The changes in the potential habitat that would be created as a result of the modified project are described in Table 3:

TABLE 3
Summary of Potential Habitat Created in Reaches 4, 5, and 6 under the Project Permitted by R-2001-0132 and Under the 2010 Proposed Project Improvements
Lower Silver Creek Plan

Created Habitat	Permitted Project	2010 Proposed Project Improvements
Riparian (ac)	2.6	4.3
Potential SRA (LF)	7,200	9,400
Grassy Slopes (ac)	0	1.5
Wetland and Open Water Habitat (ac)	6.5	7.3
Top of Bank Plantings (ac)	2.2	0.7

The Department hereby agrees to amend the agreement with addition of the following conditions:

1. Concrete Curing. Poured concrete shall be excluded from the wetted channel for a period of 30 days after it is poured. During that time the poured concrete shall be kept moist, and runoff from the concrete shall not be allowed to enter a live

stream. Commercial sealants may be applied to the poured concrete surface where difficulty in excluding water flow for a long period may occur. If sealant is used, water shall be excluded from the site until the sealant is dry.

2. Covering of the Exposed Areas in the Event of Rain. The contractor shall have readily available plastic sheeting or visquine and shall cover exposed spoil piles and exposed areas to prevent these areas from losing loose soil into the stream. These covering materials shall be applied when it is evident rainy conditions threaten to erode loose soils into the stream.

3. Spill Kits. Prior to entering the work site, all field personnel shall know the location of spill kits and trained in their appropriate use.

4. No Dumping of Litter or Debris. The contractor shall not dump any litter or construction debris within the riparian/stream zone. All such debris and waste shall be picked up daily and properly disposed of at an appropriate site.

5. Nesting Bird Buffers. In the event that an active bird nest is discovered in the construction area during construction, or in adjacent areas considered to have the potential to be disturbed by construction, a protective buffer zone shall be established around the nest. A 50-foot radius protective buffer zone shall be established around the nest of any non-raptor, ground-nesting bird. A 50-foot radius protective buffer shall be established around nests in shrubs, tree, on structures, on equipment, etc., except for raptor nests. A 250-foot radius protective buffer zone shall be established around nests for hawks, owls, (including burrowing owls), herons, and egrets. Fencing shall be installed at the boundary of each new protective buffer zone. All protective buffer zones shall be maintained, and no entrance shall be allowed into protective buffer zones, until the nest becomes inactive.

6. California Red-Legged Frog. Within 48 hours prior to construction, the project site shall be surveyed for California red-legged frog (*Rana aurora draytonii*) by a qualified biologist. If this species is detected within the project area during construction, all work shall cease within the vicinity and the Department (Tami Schane, Environmental Scientist at (415) 831-4640) contacted for further guidance.

7. Western Pond Turtle. Within 48 hours prior to construction, the project site shall be surveyed for western pond turtle (*Actinemys marmorata*) by a qualified biologist. If this species is detected within the project area during construction, all work shall cease within the vicinity until a qualified biologist can move the individual(s) to the nearest DFG-approved habitat outside of the project area.

8. San Francisco Dusky-Footed Woodrat. Within two weeks prior to construction, the project site shall be surveyed for San Francisco dusky-footed woodrat (*Neotoma fuscipes annectens*) nests by a qualified biologist. Where possible, woodrat nests shall be protected with a buffer of at least 50 feet by placing environmentally sensitive area fencing between the nests and any construction activity, including staging. This fencing shall be checked and repaired as needed on a weekly basis. If any woodrats are detected within the project area during construction, all work shall cease within the vicinity of the woodrat until it moves out of the area of active construction. If any woodrat nests can not be avoided, the District shall contact the Department (Tami Schane, Environmental Scientist at (415) 831-4640) for further guidance. No nest disturbance or removal is authorized under this agreement.

All other conditions in the Agreement remain in effect unless otherwise noted herein.

Please sign and return one copy of this letter to acknowledge the amendment. Copies of the Agreement and this amendment must be readily available at project worksites and must be presented when requested by a Department representative or agency with inspection authority.

If you have any questions regarding this matter, please contact Tami Schane, Environmental Scientist at (415) 831-4640 or tschane@dfg.ca.gov.

Sincerely,

Scott Wilson
Environmental Program Manager

cc: Tami Schane, Environmental Scientist

ACKNOWLEDGEMENT

I hereby agree to the above-referenced amendment.

Print Name: Katherine Oven Date: 5/19/2010

Signature: Katherine Oven

1600-2001-0132

FOR DEPARTMENT USE ONLY				
Date Received	Fee Enclosed	Approved?	Date Approved	Expiration Date
5/10/10	$560.25	☐ Yes ☐ No		

Ck # 310
John Ryan
Wendy M. Ryan

Schane
Neres

STATE OF CALIFORNIA
DEPARTMENT OF FISH AND GAME

REQUEST TO AMEND LAKE OR STREAMBED ALTERATION AGREEMENT

Complete EACH field and include all required enclosures. Attach additional pages, if necessary.

1. APPLICANT REQUESTING AMENDMENT

If the applicant is a business, agency, or utility, please include the name of the applicant's representative, who should be an employee of the applicant.

Name	Katherine Oven c/o Dennis Cheong		
Business/Agency	Santa Clara Valley Water District		
Street Address	5750 Almaden Expressway		
City, State, Zip	San Jose, CA 95118		
Telephone	(408) 265-2600	Fax	(408) 979-5631
Email	dcheong@valleywater.org		

RECEIVED
MAY 10 2010
DEPARTMENT OF FISH AND GAME

2. PROJECT INFORMATION

Agreement Number	Notification Number R3-2001-0132
Expiration Date	12/31/2011

3. AMENDMENT REQUEST AND FEE

Check the applicable box below and refer to the current fee schedule to determine the appropriate amendment fee.

- A minor amendment is one that would not significantly modify the scope or nature of any project covered by the agreement or any measure included in the agreement to protect fish and wildlife resources.
- A major amendment is one that would significantly modify the scope or nature of any project covered by the agreement or any measure included in the agreement to protect fish and wildlife resources, or require additional environmental review.

☐ Minor Amendment ☑ Major Amendment

Note: The Department may not process requests for amendments until it receives the correct fee.

4. AMENDMENT DESCRIPTION

A. Describe the amendment in detail

- Include any structures (e.g., rip-rap, culverts, or channel clearing) that will be placed, built, or completed in or near the stream, river, or lake.
- Specify the type and volume of materials that will be used.
- If water will be diverted or drafted, specify the purpose or use.

Enclose diagrams, drawings, plans, and/or maps that provide all of the following: site specific construction details; the dimensions of each structure and/or extent of each activity in the bed, channel, bank or floodplain; an overview of the entire project area (i.e., "bird's-eye view") showing the location of each structure and/or activity, significant area features, and where the equipment/machinery will enter and exit the project area.

See attached.

☑ Continued on additional page(s)

B. Explain the reason(s) for the amendment request

See attached.

☑ Continued on additional page(s)

3. SIGNATURE

I hereby certify that to the best of my knowledge the information in this amendment request ("request") is true and correct and that I am authorized to sign this request as, or on behalf of, the applicant. I understand that if any information in this request is found to be untrue or incorrect, the Department may suspend processing this request or suspend or revoke any draft or final Lake or Streambed Alteration Agreement issued pursuant to this request. I understand also that if any information in this request is found to be untrue or incorrect and the changes described in this request has already begun, I and/or the applicant may be subject to civil or criminal prosecution. I understand that this notification applies only to the project(s) described herein and that I and/or the applicant may be subject to civil or criminal prosecution for undertaking any project not described herein, unless the Department has been separately notified of that project in accordance with Fish and Game Code section 1602 or 1611.

Katherine Oven

Signature of Applicant or Applicant's Authorized Representative

May 6, 2010

Date

Katherine Oven

Print Name

Note: If approved, a copy of this form must be available at the work site with the original agreement.

2001-0132-3

STATE OF CALIFORNIA THE RESOURCES AGENCY

ARNOLD SCHWARZENEGGER, GOVERNOR

DEPARTMENT OF FISH AND GAME
CENTRAL COAST REGION
(707) 944-5520
Mailing address:
POST OFFICE BOX 47
YOUNTVILLE CALIFORNIA 94599
Street address:
7329 SILVERADO TRAIL
NAPA CALIFORNIA 94558

December 22, 2006

Notification Number: R3-2001-0132

Mr. Marc Klemencic
Santa Clara Valley Water District
5750 Almaden Expressway
San Jose, CA 95118

Streambed Alteration Agreement Extension
Lower Silver Creek
Santa Clara County

Dear Mr. Klemencic:

By this letter, the Department of Fish and Game is renewing the above agreement until December 31, 2011 with the construction period to occur between April 30 and October 15. All of the conditions of the original agreement (Notification Number R3-2001-0132) are to remain in effect.

Please keep this letter and the attached copy of your agreement (Notification Number R3-2001-0132) available on site for inspection by Department personnel.

Sincerely,

Cindy Catalano

Charles Armor
Acting Regional Manager
Central Coast Region

Enclosure: Notification Number R3-2001-0132

cc: Tami Schane
Lieutenant Nores
Scott Wilson
Greg Martinelli

FOR DEPARTMENT USE ONLY				
Date Received	Fee Enclosed	Approved?	Date Approved	Expiration Date
11/30/06	$ 200.00	☐ Yes ☐ No		

1549
ERIC M. EVANS

SCHANE
LT. NORES

STATE OF CALIFORNIA
DEPARTMENT OF FISH AND GAME

REQUEST TO EXTEND
LAKE OR STREAMBED ALTERATION AGREEMENT

Complete EACH field and attach additional pages if necessary. Please refer to the fee schedule and submit the correct fee with extension request.

1. APPLICANT REQUESTING EXTENSION

If the applicant is a business, agency, or utility, please include the name of the applicant's representative, who should be an employee of the applicant.

Name	Marc Klemencic		
Business/Agency	Santa Clara Valley Water District		
Street Address	5750 Almaden Expressway		
City, State, Zip	San Jose, CA 95118		
Telephone	(408) 265-2607	Fax	(408) 979-5611
Email	MKlemencic@valleywater.org		

Fish & Game
NOV 30 2006
Yountville

2. PROJECT INFORMATION

Agreement number	R3-2001-0132
Original expiration date	12/31/06
New expiration date requested	12/31/11

Specify: 1) the work that has been completed; 2) the work that needs to be completed; and 3) the amount of time needed to complete the work.

As of April 2006, all work described in the current Agreement from the confluence with Coyote Creek to I-680 (Reaches 1 through 3) has been completed. Work that needs to be completed is also described in the Agreement and includes all channel improvements from I-680 to Cunningham Avenue (Reaches 4 through 6). The time needed to complete the work is estimated to be 5 years.

☐ Continued on additional page(s)

2. PROJECT INFORMATION, continued.

Specify the reason(s) for the extension request

Work between I-680 and Cunningham Avenue (Reaches 4 through 6) was delayed in calendar year 2006 due to lack of funding. The Water District believes that changes in the State public funding environment for infrastructure projects, including flood protection projects, resulting from the recent passage of the State-wide bonds and funding of the State's Flood Control Subventions Program, will allow for construction of the remainder of the project. Lower Silver Creek is a high priority project for the Water District. When completed it will provide flood protection for over 5,000 homes, schools, and businesses on the east side of San Jose.

☐ Continued on additional page(s)

Note: The Department may not process this extension request until the extension fee has been received.

3. SIGNATURE

I hereby certify that to the best of my knowledge the information in this extension request ("request") is true and correct and that I am authorized to sign this request as, or on behalf of, the applicant. I understand that if any information in this request is found to be untrue or incorrect, the Department may suspend processing this request. I understand also that if any information in this request is found to be untrue or incorrect, I and/or the applicant may be subject to civil or criminal prosecution.

Signature of Applicant or Applicant's Authorized Representative

11/29/06
Date

Marc Klemencic
Print Name

Note: If approved, a copy of this form must be available at the work site with the original agreement.

STATE OF CALIFORNIA THE RESOURCES AGENCY GRAY DAVIS, GOVERNOR
DEPARTMENT OF FISH AND GAME
CENTRAL COAST REGION
(707) 944-5520
Mailing address:
POST OFFICE BOX 47
YOUNTVILLE CALIFORNIA 94599
Street address:
7329 SILVERADO TRAIL
NAPA CALIFORNIA 94558

June 4, 2002

Notification Number: R3-2001-0132

Stanley Williams / Santa Clara Valley Water District
5750 Almaden Expressway
San Jose, CA 95118

1601 LAKE AND STREAMBED ALTERATION AGREEMENT

This agreement is issued by the Department of Fish and Game pursuant to Division 2, Chapter 6 of the California Fish and Game Code:

WHEREAS, the applicant Stanley Williams / Santa Clara Valley Water District, hereafter called the Operator, submitted a signed NOTIFICATION proposing to substantially divert or obstruct the natural flow of, or substantially change the bed, channel, or bank of, or use material from the streambed or lake of the following water: Lower Silver Creek, located in Township 7S, Range 1E, in the County of Santa Clara, State of California; and

WHEREAS, the Department has determined that such operations may substantially adversely affect existing fish and wildlife resources including water quality, hydrology, aquatic or terrestrial plant or animal species; and

WHEREAS, the project has undergone the appropriate review under the California Environmental Quality Act; and

WHEREAS, the Operator shall undertake the project as proposed in the signed PROJECT DESCRIPTION and PROJECT CONDITIONS (attached). If the Operator changes the project from that described in the PROJECT DESCRIPTION and does not include the PROJECT CONDITIONS, this agreement is no longer valid; and

WHEREAS, the agreement shall expire on December 31, 2006; with the work to occur between April 30 and October 15; and

WHEREAS, nothing in this agreement authorizes the Operator to trespass on any land or property, nor does it relieve the Operator of the responsibility for compliance with applicable Federal, State, or local laws or ordinances. Placement, or removal, of any material below the level of ordinary high water may come under the jurisdiction of the U. S. Army Corps of Engineers pursuant to Section 404 of the Clean Water Act;

THEREFORE, the Operator may proceed with the project as described in the PROJECT DESCRIPTION and PROJECT CONDITIONS. A copy of this agreement, with attached PROJECT DESCRIPTION and PROJECT CONDITIONS, shall be provided to contractors and subcontractors and shall be in their possession at the work site. Failure to comply with all conditions of this agreement may result in legal action.

This agreement is approved by:

Jeni Swanson
for Robert W. Floerke
Regional Manager
Central Coast Region

cc: Wdn. Nores
Lt. Fox
Kristine Atkinson

STATE OF CALIFORNIA THE RESOURCES AGENCY GRAY DAVIS, GOVERNOR
DEPARTMENT OF FISH AND GAME
CENTRAL COAST REGION
(707) 944-5520
Mailing address:
POST OFFICE BOX 47
YOUNTVILLE, CALIFORNIA 94599
Street address:
7329 SILVERADO TRAIL
NAPA, CALIFORNIA 94558

Notification Number: R3-2001-0132
Lower Silver Creek, Santa Clara County

Stanley Williams / Santa Clara Valley Water District
5750 Almaden Expressway
San Jose, CA 95118

PROJECT DESCRIPTION and PROJECT CONDITIONS

Description
The project is located on Lower Silver Creek starting at the confluence of Coyote and Silver Creek and extending 4.6 miles southeast and upstream to the Cunningham Avenue crossing in the City of San Jose in Santa Clara County. The project is limited to the widening and modification of the Lower Silver Creek channel. The project will prevent future bank erosion and property damage by increasing the capacity of this channel system during high flow periods.

The following is a sub-reach by sub-reach description of the Lower Silver Creek Watershed Project. Stationing numbers relay to the typical sections also provided in the notification package. The typical sections for Reaches 4, 5 and 6 are still in draft form and do not show the following:

- Riparian habitat at 2:1 slope along entire west bank between Moss Point Drive and Cunningham Avenue (Reaches 5 & 6 – Phase 1 Plans);
- Pedestrian bridges between Bambi Lane and Dobern Avenue (Reach 4 Plans) and between Lyndale Avenue and Granite Creek Place (Reaches 5 & 6 – Phase 2 Plans);
- Continuous low flow channel through the Jackson Avenue (Reach 4), Capitol Expressway (Reach 4) and Story Road (Reach 5 & 6 – Phase 2 Plans) structures; and
- Lowering of the sediment transport channel between Ocala Avenue and Cunningham Avenue in Reach 6 (Reaches 5 & 6 – Phase 1).

These details will be included in the final plans.

Reaches 1 & 2 (Description refers to attached Plans prepared by MacKay & Somps)

Reach 1a – Station 0+00 to 8+50
This reach will consist of an 850-foot long two-stage earth channel. The channel will have a 3-foot deep sediment transport channel (designed to carry creek forming flows), riparian vegetation and an SRA planting bench. A meandering base-flow channel will form within the soft-bottom sediment transport channel, while the channel invert elevation will be 6 inches to 12 inches above the water table to support emergent marsh. Native riparian trees and shrubs will also be planted on the top of the both banks where space allows. Bio-engineering techniques (willow wattles) will be installed within the SRA planting bench for slope stabilization and habitat value. The north bank will include a maintenance road and a grass-covered floodplain. The structural stability of the SRA planting bench and the maintenance road will require the installation of ¼-ton rock toe protection. The rock toe slope protection (Sheet CD8, detail 2/18) will be covered with earth and planted with willow wattles on the south side (Sheet RD1, detail E/62) and native grasses on the north side. A 1-foot high vortex weir (using ¼ ton rock) grade control structure with low-flow notch will be incorporated just upstream of the Coyote Creek confluence (sheet CD1 and sheet CD10, details 2/20 & A/20). A 5-foot deep by 10-foot wide cross-channel stabilizer will be installed downstream of Wooster Bridge (sheet CD9, detail A/19) between the maintenance road and the SRA bench, it will be constructed of ¼-ton rock lining (with 2-feet deep low-flow notch) to provide grade control. The cross-channel stabilizer will be buried underground and not be visible. The maintenance road, constructed 6 feet above the channel invert, will be made of semi-permeable material (either a Class 2 aggregate base or 6 to 8 inch deep honeycomb cells filled with granular soil).

Reach 1a to Reach 1b Transition– Station 8+50 to 11+50
The 300-foot transition (sheet CD2) will include approximately 200 feet of gabion protected slope on the south bank and a concrete access ramp on the north bank connecting to the planned new bridge at Wooster Bridge (to be constructed by City of San Jose). The sediment transport channel, floodplain, base-flow channel and SRA bench as well as the rock toe protection described for Reach 1a continues through this section.

Reach 1b- Station 11+50 to 13+22
As the available right of way narrows to a 133 feet-wide channel, vegetated gabions are required to protect channel banks. This reach will be 172 feet long. As with other earth bottom reaches, emergent marsh vegetation will be allowed to naturally colonize the bottom of the sediment transport channel. The sediment transport channel, floodplain, base-flow channel and SRA bench as well as the rock toe protection described for Reach 1a continues through this section.

As the creek runs beneath the UPRR bridge the channel narrows to 60 feet (Stations 13+22 to 15+25, sheet CD3) the SRA bench and sediment transport channel will be interrupted as the invert will be protected with a ¼-ton rock lining (including a 2-foot deep low-flow channel). Banks will be protected with air-blown mortar (or ABM, sheet S6, detail A/32).

At a future date when the bridge is replaced and the constriction is eliminated, the two stage channel improvements will be constructed so there is a continuous sediment transport channel

through this area.

Reach 1c – Station 15+25 to 27+71
The vegetated gabion channel (due to tight 120-foot right-of-way) with earth bottom will be 1,250 feet long and will result in the removal of approximately 39,000 square feet (0.9 acres) of 5-inch thick aggregate base and asphalt concrete on existing top-of-bank. The sediment transport channel, floodplain, base-flow channel and SRA bench as well as the earth covered rock toe protection described for Reach 1a continues through this section. Native upland trees, shrubs, and vines will be planted along top of bank, vines and grasses on the gabions (to the extent possible), and trees and shrubs at the base of the south bank gabions.

In the 1998 Plan this reach was described as a concrete-lined section. Using steeper gabions (which may be difficult to revegetate) the District was able to provide a two stage channel with a continuous sediment transport channel through this area.

Reach 1d – Station 27+71 to 37+72
The two-stage earth channel with 2 to 3-foot high floodwalls for freeboard will be 1030 feet long and include a 500-foot section with vegetated gabions on the north bank to protect the slopes from erosive forces. The south bank will be planted with native riparian trees and shrubs to provide shade. The sediment transport channel, floodplain, base-flow channel and SRA bench as well as the rock toe protection described for Reach 1a continues through this section.

Reach 2 – Station 38+57 to 49+98
The architecturally treated rectangular concrete channel, due to very tight 65-foot right-of-way (and adjacent City street), will be 1,140 feet long. The channel will include a low-flow channel to allow continuity of base flows. Sediment will be periodically removed. Native trees and vines will be planted on top of the south and north banks to shade the channel. At Station 50+00, the channel transitions to the existing concrete box culvert at King Road and McKee Road intersection.

In the 1998 Plan this reach was described as a concrete-lined section.

Reach 3 (Description refers to attached Plans prepared by Spomas)

Reach 3a - Station 56+60 to 66+57
The channel transitions from the existing box culvert beneath King and McKee intersection (Sta. 54+00 to 56+60) into a two-stage earth channel that will be 1,260 feet long. Emergent marsh vegetation will naturally colonize the bottom of the sediment transport channel. Floodwalls (approx. 4 feet high) will be constructed for freeboard on the residential [north] side. A combination of levees and overland flow and park access will be constructed on the other. The north bank includes a maintenance road with an adjacent grass covered floodplain. Rock toe slope protection will be added at the base of the SRA planting bench on the south bank and on the north bank below the maintenance road. Toe protection consists of ¼ ton rock riprap and will be planted with native wetland vegetation. The channel has a 3-foot deep sediment transport channel. Riparian trees and shrubs will be planted on south bank and upland native trees and

shrubs on the opposite top of bank. The south bank will be widened up to 100 feet between Stat. 61+16 and Stat. 66+57 to provide additional riparian habitat. A meandering base-flow channel will form within the sediment transport channel.

The reach transitions to the concrete channel between Stations 66+60 and 68+80.

Reach 3b – Station 68+80 to 80+40
The architecturally treated rectangular concrete channel, due to very tight 68-foot right-of-way (and adjacent city street), will be 925 feet long. The channel will include a low-flow channel to allow continuity of base flows. Native trees, shrubs, and vines will be planted along top of banks.

In the 1998 Plan this reach was described as a concrete-lined section.

Reach 3c – Station 80+40 to 101+50
The existing 2000 feet of concrete trapezoidal channel (in very narrow 45-foot right-of-way) will be replaced with a 725-foot rectangular concrete channel (similar to Reach 3b) up to Alum Rock Avenue. Upstream of Alum Rock Avenue, after a 50-foot transition starting at Station 88+63, the existing concrete channel will be replaced by a 1200 feet-long section featuring gabion protection on the north bank and a 2:1 earth slope on the south bank, made possible by a planned purchase of additional right-of-way. The gabion/earth bank section of this reach will include a naturally formed base-flow channel, a sediment transport channel, SRA bank and riparian vegetation on the south bank. This section will also be split by the existing 3-cell culvert at Sunset Avenue. Rock toe slope protection will be added at the base of the SRA planting bench on the south bank and on the north bank below the maintenance road. The toe slope protection will be vegetated as described under Reach 3a. The bridge at Alum Rock Avenue will be replaced. Two additional box culverts will be constructed at Sunset Avenue to increase conveyance capacity. One box culvert will be set lower to allow for continuity of the base flow channel.

In the 1998 Plan this reach was described as a concrete-lined section. The District plans to purchase additional property (approximately 60 feet) so a two stage channel can be constructed including a sediment transport channel, SRA bench, and vegetated earth bank on the south side.

Reach 3d – Station 101+50 to 103+50
The 200 feet long gabion/earth bank channel, made possible through the planned purchase of additional right-of-way, will include a sediment transport channel, a naturally formed base-flow channel, and riparian vegetation (with SRA bench) on the south bank. . Rock toe slope protection will be added at the base of the SRA planting bench on the south bank and on the north bank below the maintenance road. The toe slope protection will be vegetated as described under Reach 3a.

In the 1998 Plan this reach was described as a concrete-lined section. The District plans to purchase additional property (approximately 40 feet) so a two stage channel can be constructed including a sediment transport channel, SRA bench, and vegetated earth bank on the south side.

Reach 3e – Station 106+30 to 115+19
This 880 foot long sub-reach will be rebuilt as a two-stage earth channel with 30-foot bottom width and 145-foot right-of-way and will include a grass floodplain, a sediment transport channel, an SRA bench and a naturally formed base-flow channel. Rock toe slope protection will be added at the base of the SRA planting bench on the south bank and on the north bank below the maintenance road, and will be vegetated as described under Reach 3a. Floodwalls will be installed for freeboard on the residential side. A combination of levees and overland flow and park access will be created on the other side. Riparian trees and shrubs will be planted on south bank, native upland trees will be planted on top of the north bank. Kammerer Avenue Bridge will be replaced with a pedestrian bridge.

Reach 3f – Station 115+19 to 122+42
The earth channel with 30-foot bottom width and 170-foot right-of-way will be 720 feet long and will include a grass floodplain, a naturally formed base-flow channel and a sediment transport channel. The south bank will be widened up to 100 feet between Stat. 115+19 and Stat. 117+33 to provide additional riparian habitat. Rock toe slope protection will be added at the base of the SRA planting bench on the south bank and on the north bank below the maintenance road and will be vegetated as described under Reach 3a. Additional right-of-way will be purchased from the nearby school. Riparian habitat, including shaded riverine aquatic cover, will be planted along the south bank.

Reach 4 (Description refers to attached Plans prepared by Ruggeri-Jensen-Azar)

Reach 4a – Station 127+93 to 130+35
This reach stretches between the downstream end of Jackson Avenue and the upstream end of Interstate 680. The reach consists primarily of a 240-foot U-frame concrete channel with a sediment trap and low flow channel (not shown on typical section, sheet 8) and wing wall transitions to the existing Interstate 680 culvert. The existing trapezoidal concrete channel will be removed. Floodwalls of between 0-4 feet will be constructed as required for freeboard.

Jackson Avenue Bridge and transition to Reach 4b - Station 130+35 to 132+56
This section begins at the downstream end of Jackson Avenue and continues through the transition on the upstream side of the Jackson Avenue Bridge (or 221 feet). New box culverts will be installed under Jackson Avenue. One of the new culverts will be installed approximately 2 feet deeper than the proposed channel bottom invert to provide continuity of the base-flow channel. Upstream of the Jackson Bridge box culverts, the transition includes a ¼ ton rock lining strip and concrete apron incorporating a 2 foot deep base-flow channel (not shown on typical section Sheet 8) to protect the invert. The south (or left bank) has an SRA bench following the transition, while the north (or right) bank contains a 20 foot wide aggregate base maintenance road 2.5 feet above the sediment transport channel bottom and 15 foot wide access ramp to Jackson Avenue. Rock toe protection (1/4 ton rock) will be added to the north bank of the sediment transport channel for structural stability and to protect the SRA bench. The rock toe protection will be planted with native wetland vegetation similarly to Reach 5a/5b (see Reaches 5 & 6-Phase I Sheet L9, details 1 & 2). Vegetated blocks provide slope protection for the north and

south banks. Flood walls of approximately 4 ft above grade are required for this entire section.

Reach 4b Station 132+56 to 153+85
This reach extends from the end of the Jackson Avenue transition to the downstream end of the Capitol Expressway downstream transition. Emergent marsh vegetation will naturally colonize the earthen bottom of the sediment transport channel. A meandering base-flow channel will form within the sediment transport channel. Rock toe protection (¼ ton rock) will be added to north and south left and right banks of the sediment transport channel for structural stability and to protect the restored aquatic habitat. The rock toe protection will be covered with vegetation as described under Reach 4a. The south bank will have a 5 foot wide shaded riverine aquatic (SRA) bench that will be planted with riparian trees and shrubs for SRA cover, while the north bank will include a 20 foot wide aggregate base maintenance road 2.5 feet above the sediment transport channel bottom and a 15 foot wide access ramp to Jackson Avenue at the downstream end. Vegetated blocks provide slope protection for the north and south banks. Floodwalls are required at heights up to 4 feet at the downstream end of the channel, with a gradual height decline further upstream.

A new full-span pedestrian bridge will be constructed near Station 143+00. The proposed bridge will not affect the channel configuration or flood protection or revegetation features.

Capitol Expressway Bridge and transition – Station 153+86 to 157+60
This section spans the length of Capitol Expressway and the upstream and downstream transitions. A new box culvert will be installed under Capitol Expressway. The new culvert invert will be approximately 2 feet deeper than the proposed channel bottom invert to provide continuity with the base-flow channel. Upstream of the Capitol Expressway Bridge box culverts, the transition includes a ¼ ton rock lining strip and concrete apron, incorporating a 2 foot deep base-flow channel to protect the invert (not shown on typical section, Sheet 8). There are 15 foot wide access ramps to the downstream and upstream sides of Capitol Expressway. No flood walls are required for this entire section.

Reach 4c – Station 157+61 to 170+08
This reach extends from the end of the upstream end of the Capitol Expressway transition to the upstream end of Reach 4. Emergent marsh vegetation will naturally colonize the earthen bottom of the sediment transport channel. A meandering base-flow channel will form in the sediment transport channel bottom. Rock toe protection (1/4 ton rock) will be added to north and south banks of the sediment transport channel for structural stability and to protect the restored habitat. The south bank will have a shaded riverine aquatic (SRA) bench that will be planted with riparian trees and shrubs for SRA cover, while the north bank contains a 20 foot wide aggregate base maintenance road 2.5 feet above the sediment transport channel bottom. Vegetated blocks provide slope protection for the north and south banks. Floodwalls are required in some upstream areas at heights up to 2 feet.

Reaches 5 & 6 (Description refers to attached Phase 2 and Phase 1 Construction Plans prepared by Parsons Engineering Science)

Reach 5a/5b – Station 170+08 to 199+60 (refer to Phase 2 Construction Plan)
This reach extends from the end of the end of Reach 4 to the upstream end of Murtha Drive. Emergent marsh vegetation will naturally colonize the earthen bottom of the sediment transport channel. A meandering base-flow channel will form in the sediment transport channel bottom. The west bank has a shaded riverine aquatic (SRA) bench that will be planted with riparian trees and shrubs for SRA cover, while the east bank contains a 20 foot wide aggregate base maintenance road 2.5 feet above the sediment transport channel bottom. Rock toe protection (1/4 ton rock) will be added to both banks of the sediment transport channel for structural stability and to protect restored aquatic habitat. Bioengineered riprap will provide the toe protection (Sheet L9, details 1 & 2) and include native wetland vegetation on both banks while contributing to the SRA cover through the addition of willow stakes on the south bank (Sheet L10, detail 7). Vegetated blocks provide slope protection for the east and west banks. Floodwalls are required in most of the reach in heights up to 5 feet.

A new concrete box will be constructed to convey water from North Babb Creek into the sediment transport channel.

A new full-span pedestrian bridge will be constructed near Station 171+40. The bridge will not affect the channel configuration, flood protection or revegetation features.

A new box culvert will be installed under Story Road. The new culvert invert will be approximately 2 feet deeper than the proposed channel invert to provide continuity with the base-flow channel. Upstream of the Story Bridge box culverts, the transition includes a ¼ ton rock lining strip and concrete apron incorporating a 2 feet deep base-flow to protect the invert. There are 15 foot wide access ramps to the downstream and upstream sides of Capitol Expressway. The existing culvert extending approximately 150 downstream of Story Road will be removed and the hybrid vegetated block wall with earthern sediment transport channel described under Reach 5a/5b will be continued to Story Road.

Reach 5c/6a – Station 199+61 to 217+54 (Refer to Phase 1 Construction Plan)
This reach extends from Murtha Avenue to the upstream end of Moss Point Drive. Emergent marsh vegetation will naturally colonize the earthen bottom of the sediment transport channel. A meandering base-flow channel will form in the sediment transport channel bottom. Rock toe protection (1/4 ton rock) will be added to east and west banks of the sediment transport channel for structural stability and to protect restored habitat, as described under Reach 5a/5b. The west bank will have a 5 foot shaded riverine aquatic (SRA) bench that will be planted with riparian trees and shrubs for SRA cover, while the east bank will contains a 20 foot wide aggregate base maintenance road 2.5 feet above the sediment transport channel bottom. Vegetated blocks will provide slope protection on both banks. Floodwalls are required in some areas at heights up to 1.5 feet.

A new concrete box will be constructed to convey water from South Babb Creek into the sediment transport channel.

Reach 6b - Station 217+55 to 244+36 (Refer to Phase 1 Construction Plan)
This reach extends from Moss Point Drive to the downstream end of Cunningham Avenue. Emergent marsh vegetation will naturally colonize the earthen bottom of the sediment transport channel. A meandering base-flow channel will form in the sediment transport channel bottom. Rock toe protection (1/4 ton rock) will be added to east and west banks of the sediment transport channel for structural stability and to protect restored habitat, as described under Reach 5a/5b. Riparian trees and shrubs will be planted on the west bank to create a 2:1 slope riparian habitat area throughout this subreach, while vegetated blocks will protect the east bank. Quarter ton rock will protect the base of the riparian habitat slope from erosion. The east bank will include a 20 foot wide aggregate base maintenance road 2.5 feet above the sediment transport channel bottom. Floodwalls are required in most areas at heights up to 3.5 feet.

Conditions

1. The time limit for completing the work subject to this agreement shall be confined to the period of April 30 to October 15 of any year, except as otherwise stipulated in this Agreement. Any exception of this time restriction shall be handled on an individual site-specific basis.

2. Final construction plans shall be submitted to the Department prior to construction. The Operator shall notify the Department of any modifications make to the project description as stated above. At the discretion of the Department, project modifications may require an amendment or a new application.

3. Disturbance or removal of vegetation shall not exceed the minimum necessary to complete operations. Precautions shall be taken to avoid other damage to vegetation by people or equipment. The disturbed portions of any stream channel within the high water mark of the stream or lake shall be restored to as near their original condition as possible.

4. Revegetation and replacement plantings shall consist of locally obtained, native species, from the Lower Silver Creek or Coyote Creek watersheds.

5. Revegetation will be implemented as described in Section 6 of the Lower Silver Creek Watershed Mitigation and Monitoring Program (December 2001). Planting densities shall be and average of 12-foot centers for trees, 6-foot centers for shrubs, and willow cuttings or willow wattle bundles shall be placed on 6-foot centers. Monitoring shall be conducted for ten (10) years, in years 1, 2, 3, 5, 7 and 10 as described in Section 7 of the Mitigation and Monitoring Program. The following success criteria shall apply:

    a. At the end of three (3) years there shall be 80% or greater survival of all planted material. If at the end of three (3) years there is less than 80% survival, all dead plants shall be replaced and a contingency plan correcting maintenance problems shall be submitted to the Department.
    b. After the first 3 years success criteria shall as described in section 4 of the Mitigation and Monitoring Program (December 2001) which reads as follows:

- By year 5, all self-sustaining planted stock (trees and shrubs) must have either 70 percent survival or the revegetation sites must have an absolute woody vegetation canopy cover of 30 percent or greater within a specific sub-reach planting site.
- At year 10, the average absolute woody vegetation canopy cover of trees and shrubs must show a steady trend towards 70 percent or greater, and no less than 50 percent absolute woody vegetation canopy cover of trees and shrubs species is to occur at any revegetation site.

6. An annual monitoring report shall be submitted to the Department for the duration of mitigation monitoring no later than April 1 of the following year after fall monitoring.

7. Rock, riprap, or other erosion protection shall be placed in areas where vegetation cannot reasonably be expected to become reestablished.

8. Installation of bridges, culverts, or other structures shall be such that water flow is not impaired and upstream or downstream passage of fish is assured at all times. Bottoms of temporary culverts shall be placed at or below stream channel grade.

9. In ephemeral streams, it is anticipated that all construction shall be done while the work site is dry and that vehicles shall not be driven or equipment operated in water covered portions of the stream, or where wetland vegetation, riparian vegetation or aquatic organisms may be destroyed, except as otherwise provided for in the Agreement and as necessary to complete authorized work. Excavated material shall be placed outside the stream's ordinary high water mark on dry portions within the stream's ordinary high water mark when the material is placed on filter fabric.

10. When work in a flowing stream is unavoidable, the entire streamflow shall be diverted around the work area by a barrier, temporary culvert, and/or a new channel capable of permitting upstream and downstream fish movement. Construction of the barrier and/or the new channel shall normally begin in the downstream area and continue in an upstream direction, and the flow shall be diverted only when construction of the diversion is completed. The water diversion plan shall allow stream flows to gravity flow around or through the work site using temporary culverts or stream flow is pumped around the work site using pumps and screened hoses. Coffer dam construction shall be adequate to prevent seepage into or from the work area. Coffer dams and/or in-channel berms shall be constructed of river run gravel with a fines content that is less than 15%. Fines are defined as material that is able to pass through a #20 sieve. Coffer dams shall be installed both upstream and downstream not more than 50 feet from the extent of the work area. The entire work area shall be dewatered. The enclosure and the supportive material shall be removed when the work is completed and the removal shall normally proceed from downstream in an upstream direction. Normal flows shall be restored to the affected stream immediately upon completion of work at that location.

11. During dewatering operations, the operator shall check for stranded fish and all reasonable efforts shall be made to capture and move all stranded fish observed in the dewatered area by a qualified biologist holding a valid Scientific Collecting Permit.

Captured fish shall be released immediately upstream of the work site in the wetted channel.

12. No other diversion method shall be used without authorization of the Department. If another diversion method is preferred, the Operator shall submit a plan detailing the desired diversion method. Authorization of any other diversion method shall be at the discretion of the Department.

13. When any dam (any artificial obstruction) is being constructed, maintained, or placed in operation, sufficient water shall at all times be allowed to pass downstream to maintain fishlife below the dam pursuant to Fish and Game Code Section 5937.

14. Erosion control measures shall be utilized throughout all phases of operation where sediment runoff from exposed slopes threatens to enter waters of the State. At no time shall silt laden runoff be allowed to enter the stream or be placed where it may enter the stream.
15. Staging and storage areas for equipment, materials, fuels, lubricants, and solvents, shall be located outside of the stream channel and banks. Stationary equipment such as motors, pumps, generators, compressors, and welders, located within or adjacent to the streams shall be positioned over drip pans. Any equipment or vehicles driven and/or operated within or adjacent to the stream shall be checked and maintained daily, to prevent leaks of materials that if introduced to water could be deleterious to aquatic life. Vehicles shall be moved away from the stream prior to refueling and lubrication.

16. No equipment will be operated in live stream channels.

17. Wash water containing mud or silt from aggregate washing or other operations shall not be allowed to enter a lake or flowing stream.

18. Silty/turbid water from the excavation and/or project activities shall not be discharged into the stream, lake, or into storm drains. Such water shall be pumped into holding facility or into a settling pond located in flat stable areas outside of the stream channel, or sprayed over a large area outside the stream channel or lake to allow for natural filtration of sediments. At no time shall turbid water from the settling ponds be allowed to enter back into the stream channel until water is clear of silt. Stream turbidity adjacent to and immediately downstream of the project site shall not exceed 50 NTU's above background levels.

19. Preparation shall be made so that runoff from steep, erodable surfaces will be diverted into stable areas with little erosion potential. Frequent water checks shall be placed on dirt roads, cat tracks, or other work trails to control erosion.

20. Poured concrete shall be excluded from the wetted channel for a period of two (2) weeks after it is poured. During that time the poured concrete shall be kept moist, and runoff from the wet sacked concrete shall not be allowed to enter a live stream. Commercial

sealants (e.g. Deep Seal, Elasto-Deck BT Reservoir Grade) may be applied to the poured concrete surfaced where difficulty in excluding water flow for a long period may occur. If sealant is used, water shall be excluded from the site until the sealant is dry.

21. If a stream channel has been altered during the operations, its low flow channel shall be returned as nearly as possible to its natural state without creating a possible future bank erosion problem, or a flat wide channel or sluice-like area. The gradient of the streambed shall be as nearly as possible the same gradient as existed prior to disturbance.

22. Structures and associated materials not designed to withstand high seasonal flows shall be removed to areas above the high water mark below such flows occur.

23. Not more than two weeks prior to project construction, a survey shall be conducted by a qualified biologist for nesting raptors. If raptors are nesting, there shall be no impacts to habitat within 300 feet of the raptor nests trees during the nesting season. The survey results shall be reported in writing to the Department Regional Office.

24. Not more than two weeks prior to project construction, a survey shall be conducted by a qualified biologist for nesting migratory birds. If migratory birds are nesting, there shall be no impacts to those areas until nesting activity is completed and birds are no longer present. The survey results shall be reported in writing to the Department Regional Office.

25. The project site has been identified as an area that is potentially inhabited by a threatened species, California red-legged frog and steelhead. The operator is required to comply with all applicable state and federal laws, including the California and Federal Endangered Species Acts. This agreement does not authorize the take of any state or federally listed species.

26. By May 1 of each year after the project commences, the operator shall submit to the Department a status report describing progress made during the previous construction season, dates of the construction season, any problems encountered during the work, and the status on revegetation of disturbed sites.

27. The operator will notify the Department of Fish and Game of the date of commencement of operations and the date of completion of operations at least five days prior to such operations.

If the Operator needs more time to complete the authorized activity, the work period may be extended on a day-to-day basis by Margaret Roper at (408)843-8917, or alternatively, to the Yountville office at 707-944-5520.

A copy of this agreement must be provided to the contractor and all subcontractors who work

within the stream zone and must be in their possession at the work site.

Building materials and/or construction equipment shall not be stockpiled or stored where they could be washed into the water or where they will cover aquatic or riparian vegetation.

Debris, soil, silt, bark, rubbish, creosote-treated wood, raw cement/concrete or washings thereof, asphalt, paint or other coating material, oil or other petroleum products, or any other substances which could be hazardous to aquatic life, resulting from project related activities, shall be prevented from contaminating the soil and/or entering the waters of the state. Any of these materials, placed within or where they may enter a stream or lake, by Operator or any party working under contract, or with the permission of the Operator, shall be removed immediately.

The contractor shall not dump any litter or construction debris within the riparian/stream zone. All such debris and waste shall be picked up daily and properly disposed of at an appropriate site.

The Operator is liable for compliance with the terms of this Agreement, including violations committed by the contractors and/or subcontractors. The Department reserves the right to suspend construction activity described in this Agreement if the Department determines any of the following has occurred:

A). Failure to comply with any of the conditions of this Agreement

B). Information provided in support of the Agreement is determined by the Department to be inaccurate.

C). Information becomes available to the Department that was not known when preparing the original conditions of this Agreement (including, but not limited to, the occurrence of State or federally listed species in the area or risk to resources not previously observed)

D).The project as described in the Agreement has changed or conditions affecting fish and wildlife resources change.

Any violation of the terms of this Agreement may result in the project being stopped, a citation being issued, or charges being filed with the District Attorney. Contractors and subcontractors may also be liable for violating the conditions of this agreement.

Department personnel or its agents may inspect the work site at any time.

Amendments and Renewals

The Operator shall notify the Department before any modifications are made in the project plans submitted to the Department. Project modifications may require an amendment or a new notification.

This Agreement is transferable to subsequent owners of the project property by requesting an amendment.

To renew the Agreement beyond the expiration date, a written request for a renewal must be submitted to the Department (1600 Program, Post Office Box 47, Yountville, California 94599) for consideration at least 30 days before the Agreement expiration date. A renewal requires a

fee. The Fee Schedule can be obtained at www.dfg.ca.gov/1600 or by phone at (707) 944-5520. Renewals of the original Agreement are issued at the discretion of the Department.

To modify the project, a written request for an amendment must be submitted to the Department (1600 Program, Post Office Box 47, Yountville, California 94599). The fee for an amendment is one-half (½) of the original fee. Amendments to the original Agreement are issued at the discretion of the Department.

Please note that you may not proceed with construction until your proposed project has undergone CEQA review and the Department signs the Agreement.

I, the undersigned, state that the above is the final description of the project I am submitting to the Department for CEQA review, leading to an Agreement, and agree to implement the conditions above required by the Department as part of that project. I will not proceed with this project until the Department signs the Agreement. I also understand that the CEQA review may result in the addition of measures to the project to avoid, minimize, or compensate for significant environmental impacts:

Operator's name (print): Stanley M. Williams

Operator's signature: Stanley M Williams

Signed the 28th **day of** May**, 2002**

CK# 700299
$1390.50
SANTA CLARA VALLEY WATER DISTRICT

R3-2001-0132
REC'D. 2/23/01

JARPA

SAN FRANCISCO BAY AREA
JOINT AQUATIC RESOURCE PERMIT APPLICATION

NORES
FOX
GINGRAS

PLEASE TYPE OR PRINT IN BLUE OR BLACK INK

Agency Information	Contact Name	Phone #	Application #(if known)
☐ **I have applied to my local agency (i.e. City or County Planning Department), and special local district (i.e. flood control) if applicable, for CEQA compliance to meet local permitting requirements. Based on the instructions, I am sending copies of this application to the following federal, state, and regional agencies**			
☐ San Francisco Bay Conservation and Development Commission (BCDC) for ☐ A "Notice of Intent to Proceed:" with routine maintenance under BCDC regionwide or abbreviated regionwide permit #_____ ☐ An administrative permit application for minor repair or improvement ☐ A federal consistency determination or certification (federal agencies only) ☐ A major permit application for a new project ☐ An application for a material amendment to BCDC permit#_____	Lee Miles	(510) 622-2429	
☒ San Francisco Bay Regional Water Quality Control Board for Section 401 or Waste Discharge Requirements			
☒ California Department of Fish and Game for 1601 X 1603____ ☐ Timber Harvest Plan # ____ ☐ Gravel Extraction # ____ ☐ Water App # ____	TBD		
☐ California State Lands Commission*			
☐ California Coastal Commission	Marc D'Avignon	(415) 977-8446	
☐ US Army Corps of Engineers for Section 404 or Section 10 Individual or Nationwide Permits			
☐ US EPA for 404 Individual Permits*			
☐ US Fish and Wildlife Service for 404 Individual Permits*			
☐ National Marine Fisheries Service			
☐ US Coast Guard for Section 9 Bridge Permit			
☐ Federal Funding Agency ____			

** See Instructions*

AGENCY CONTACT INFORMATION ON PAGE 13

This form may be duplicated as needed.

SECTION ONE – TO BE COMPLETED BY ALL APPLICANTS

Attach additional sheets, if needed

Box 1 Applicant Name Santa Clara Valley Water District: George Fowler			
Mailing Address 5750 Almaden Expressway, San Jose, CA 95118			
Work Phone (408) 265-2607 x-2748	Home Phone N/A	Fax # (408) 264-0213	E-mail Address GeorgeF@scvwd.dst.ca.us
Relationship of applicant to property: ☒ Owner ☐ Purchaser ☐ Lessee ☐ Other			
Application is hereby made for a permit or permits to authorize the activities described herein. I certify that I am familiar with the information contained in this application, and that to the best of my knowledge and belief, such information is true, complete, and accurate. I further certify that I possess the authority to undertake the proposed activities. I hereby grant to the agencies to which this application is made, the right to enter the above-described location to inspect the proposed, in-progress or completed work. I agree to start work only after all necessary permits have been received.			
Signature of applicant			Date 2/22/01

Box 2 Authorized Agent Name and Signature *(If an agent is acting for the applicant during the permit process)* René Langis			
Mailing Address 2471 Autumnvale Drive, Suite G, San Jose, CA 95131			
Work Phone 408.586.0110	Home Phone N/A	Fax # 408.586.0101	E-mail Address rlangis@scvwd.dst.ca.us
I hereby designate the above named authorized agent to act as my agent in matters related to this application for permit(s). I understand that I am bound by the actions of my agent and I understand that if a federal or state permit is issued, I, or my agent, must sign the permit.			
Signature of applicant			Date 2/22/01
I certify that I am familiar with the information contained in this application, and that to the best of my knowledge and belief, such information is true, complete, and accurate.			
Signature of authorized agent			Date 2-21-01

Box 3 Name of property owner(s), if other than applicant. N/A	
Mailing Address	
Work Phone	Home Phone
I understand I am bound by actions of authorized agent and/or the applicant.	
Signature of property owner (except public entity landowners) N.A.	Date —

This page must be signed by the applicant, property owner and agent to be considered complete.

Box 4 Location, including street address, city, county, zip code where proposed activity will occur

Lower Silver Creek from confluence with Coyote Creek to confluence with Lake Cunningham, San Jose (eastern portion), Santa Clara

Waterbody (if known): Lower Silver Creek

Tributary of: Coyote Creek

Latitude & longitude if known: N/A	Zoning Designation: N/A
Assessors parcel number: N/A	Section, Township, Range, USGS Quadrangle Map: T.7.S (Small part in T.6.S); R.I.E.

Box 5 Existing site conditions: Describe the existing condition of the site, including wetlands, channels, streams, ponds, seeps and ditches, and other jurisdictional features. Include information on elevations, vegetation, property use, and structures. Use additional pages if necessary. If any portion of the proposed activity has already been initiated or completed on this property, indicate type of activity and month and year of completion, if applicable: January Month/ 1992 Year Flood control improvements* –

See Section 2 of the enclosed Initial Study/Environmental Assessment as well as Subsection 4.4 of Section 4.

* Work completed in January 1992 consisted in the installation of approx. 70 feet of rectangular concrete channel immediately down stream of the culvert under the King and McKee Roads intersection on Reach 2.

Box 6 Proposed starting date: April 2002 Estimated duration of activity: 3 years

Will the project be constructed in stages? ☒ Yes ☐ No

Box 7 Description of the proposed project: Use as many pages as necessary to describe the project as completely as possible. Describe the area within the project site that will be used each for development features and open space. Include construction plans pertaining to the project. For additional guidance on what to include, refer to the instructions

See Subsection 1.3-1.5 of the enclosed Initial Study/Environmental Assessment for a description of the project.

See Lower Silver Creek Watershed Project Section 404(B)1 Alternatives Analysis and Plan Update (Enclosed) that includes a USGS map, photos, and reach cross sections. We are also enclosing drawings and site photographs.

Attach figures, maps, and directions to the project site. See instructions for completing the drawings. One set of original or good quality reproducible drawings must be attached to each agency. Applicants are encouraged to submit photographs of the project site, but these do not substitute for drawings. BCDC, the Corps Of Engineers and Coast Guard require at least one set of drawings on 8-1/2 x 11 inch sheets. Larger drawings may also be required. Fish and Game requires a USGS map. For a complete list of required drawings, refer to the instructions.

Reason(s) for the proposed work: **BOX 7 (CONTINUED)**

To reduce potential flood damages associated with flooding along the Lower Silver Creek stream corridor.

Box 8 Placement of Structures And/Or Fill Material

- Will fill be placed below the ordinary high water line for fresh waters? ☒ Yes ☐ No
- Will rock, fill, bulkhead, pilings, structures or other material be placed waterward of the mean high water line for tidal waters? ☐ Yes ☒ No
- Will fill be placed below the high tideline in tidal waters? ☐ Yes ☒ No

If applicable, number of linear feet of impact 22,650 LF
Amount of **total** fill - 110,000 cubic yards 1,133,500 square feet 26 acreage
Amount of fill **below the ordinary high water mark or high tide line** 60,000 cubic yards 8.8 acreage
Type of fill Earth, rock, concrete, concrete pavers, blocks and riprap Material source

Box 9 Impacts on Wetlands

- Will the proposed project have temporary or permanent impacts to wetlands, including seasonal wetlands, managed wetlands or on tide or submerged lands (i.e. fill, flooding, draining)? ☒ Yes ☐ No If yes, please describe the wetlands, using additional pages as necessary. Provide one or more photographs of the existing conditions.

See attached wetlands delineation report, IS/EA sub section 4.4.C and 404(B)(1) Alternatives Analysis and provided photographs.
Approximately 4.7 acres of wetlands will be temporarily affected.

- If a wetlands delineation has been completed, please submit it with application - attached ☒ Yes ☐ No
- If a geology or soils report has been prepared, please submit with application – attached ☐ Yes ☒ No

Box 10 Waterway Impacts

Will the project or activity involve work in the bed, bank or channel of a river, stream (including seasonal streams), or lake? ☒ Yes ☐ No If yes, describe existing and proposed conditions. Number of linear feet along the waterway that are involved --22,650 ft. See Boxes 7-9

Box 11 Potential for Impacts to Threatened and Endangered Species

List any state and/or federally listed species and/or associated habitat that occurs or may occur on the project site. If a federal or state listed species is being impacted, please provide a description and a biological assessment - attached ☐ Yes ☒ No Have surveys, using US Fish and Wildlife Service protocols, for possible listed species been conducted? ☒ Yes, ~~attached~~ but not attached - ☐ No

See enclosed letters from USWFS and NMFS regarding compliance with the FESA.

Box 12 Excavation And/Or Dredging

For Projects OUTSIDE of the San Francisco Bay, San Pablo and Suisun Bay. [Dredging Projects **in** San Francisco Bay, San Pablo Bay, and Suisun Bay, should be completed through the Dredged Material Management Office (DMMO)].

Will excavation or dredging be required in water or wetlands? ☒ Yes ☐ NoIf dredging or excavation:

- Volume: 128,000 (cubic yards)/area 8.8 acres (acres)/ 22,650 (linear feet of channel)
- Composition of material to be removed: Earth, concrete
- Disposal location for excavated material: To be determined
- Method of dredging: Excavators, Dozers, Backhoes
- Purpose of the dredging: Flood protection channel improvements
- Estimated future maintenance dredging required annually: 10,000 cubic yards
- Additional information to be provided in an attachment

Box 13 Mitigation

Identify proposed actions to avoid, minimize, and mitigate detrimental impacts, and provide proper protection of aquatic life. Describe the size, type, location and functions of the mitigation and a time line for implementation. Define buffer areas as appropriate. Include the monitoring component, if applicable.

If an Alternatives Analysis has been prepared , please attach it- attached ☒ Yes ☐ No

Mitigation Plan to be submitted at a later date; See also Alternatives Analysis; See also IS/EA

Box 14 Environmental Impact Documentation

National Environmental Protection Act (NEPA) or California Environmental Quality Act (CEQA) compliance document provided: ☒ Yes ☐ No

Is documentation being prepared? ☐ Yes ☒ No

The following is attached: ☐ EIS ☐ EIR ☒ Negative Declaration ☐ Mitigated Negative Declaration ☐ Categorical Exemption ☐ Statutory Exemption ☐ Notice of Exemption ☐ Notice of Determination

Box 15 Has any agency denied approval for the activity described herein or for any activity directly related to the activity described herein? ☐ Yes ☒ No If yes, explain:

Box 16 Names, addresses and telephone numbers of adjoining property owners, lessees, etc.
(Local governments may require additional notice – consult your local government.)

Name	Address	Phone number
See attached.		

End of Section One

Section Two – Agency Specific Requirements for Project Permitting

Box 17 Department of Fish and Game - Projects Adjacent to, or Involving a River, Stream, or Lake

❑ **This project does not involve this agency (no additional questions completed)**

Project Name Lower Silver Creek Project cost $ 38,300,000 Proposed start date June 2001
Proposed completion date 2004 Number of Stream Encroachments N/A

Project ❑ Operator❑ Contractor, ❑ Contact, if different from applicant, agent, and property owner on page 2 Name, address, phone and fax for each

Attach copies of completed applicable local, state, or federal permits, agreements or authorizations:
- ❑ Local (describe):
- ❑ State (describe):
- ❑ Federal (describe):

	Project Questionnaire:	Yes	Maybe/ Uncertain	No	Please explain if you responded "yes" or "maybe/uncertain"
1.	Will the project or activity involve work on the bank of a river, stream, or lake?	X			Flood control protection improvements to 4.64 mi. of flood control channel
2.	If you answered "yes" to #1, will the project or activity involve any of the following:				
	a. Removal of any vegetation?	X			Wetland, ruderal grasses, upland ornamental shrubs/trees
	b. Excavation of the bank?	X			To widen channel
	c. Placement of piers?	X			To replace bridge structures (i.e. Alum Rock, Jackson, Sunset, and Capitol EXPY
	d. Placement of bank protection or stabilization structures or materials (e.g., gabions, rip-rap, concrete slurry/sacks)?	X			Hybrid blocks, concrete walls, blocks/pavers
3.	Will the project or activity take place in, adjacent to, or near a river that has been designated as "wild and scenic" under state or federal law?			X	
4.	Will the project or activity involve work in the bed or channel of a river, stream, or lake?	X			Excavation to widen existing flood control channel and to place materials
5.	Will the project or activity involve the placement of any permanent or temporary structure in a river, stream, or lake?	X			Placement of earth fill, concrete, rock and blocks, resting pools, drop structures
6.	Will the project involve the use of material from a streambed?		X		Streambed material may be used for coffer dams
7.	Will the project or activity result in the disposal or deposition of debris, waste, or other material in a river, stream, or lake?			X	Other material – See #5 No intentional disposal of debris or waste
	a. If you answered "yes" to #7, describe the material that will be disposed of or deposited in the river stream, or, lake:	Rock, concrete, earth fill, concrete pavers, blocks			
8.	Will any type of equipment be used in a river, stream, or lake?	X			Heavy construction equipment (temporarily)
	a. If you answered "yes" to #8, describe the type of equipment that will be used:	Excavators, backhoes, dozers, pumps, dump trucks (during construction)			
9.	Does the project or activity area flood or periodically become inundated with water?	X			The area is a flood control channel that contains low flows all year-long, as well as conveying storm flows

10.	Will water need to be diverted from a river, stream, or lake for the project or activity?	X			See #10 below.
11.	If you answered "yes" to #10, please answer the following:				
	a. Will this be a temporary diversion?	X			Upon completion of work in any one reach, normal flows will be reestablished.

10. Low summer flows will be bypassed as necessary around work sites.
No diversion during fish migration or passage of flood flows.

BOX 17 (CONTINUED)

	b. Will water quality be affected by the deposition of silt, an increase in water temperature, a change in the pH level, or in some other way?	X			Temporarily, especially when putting in or removing temporary cofferdams – See IS/EA and BMP list
	c. Will the water be diverted by means of a dam, reservoir, or other water impoundment structure?	X			temporary cofferdams and piping
12.	Will the project or activity be done pursuant to a water right application or permit?			X	
13.	Has a wildlife assessment or study been completed for the area where or near where the project or activity will take place? (If "yes", attach or enclose a copy of the assessment or study.)	X			See IS/EA
14.	Will the project or activity affect fish, amphibians, insects, or other aquatic resources?	X			Native fish will be relocated as reaches are scheduled to be reconstructed
15.	Will the project or activity affect terrestrial wildlife?	X			Temporary disruption of movement through affected reach
16.	Are any endangered or rare plant species thought or known to occur in the area where the proposed project or activity will take place?			X	
17.	Are any endangered or threatened fish, bird, or animal species thought or known to occur in the area where the proposed project or activity will take place?			X	
18.	Have you contacted any other local, State, or federal agency regarding the project or activity?	X			
	a. If you answered "yes" to #18, please list the names of the agencies you have contacted:	See attached letters from USFWS and NMFS			
19.	Have you applied for or obtained any permit, agreement, or other authorization for your project or activity from any government agency?	X			
	If you answered "yes" to #19, please list the names or describe the permit, agreement, or authorization you have applied for or obtained:	Applied for U.S. Army Corps of Engineers permit			
20.	Have any environmental documents pertaining to your project or activity been prepared?	X			
	a. If you answered "yes" to #20, please list the environmental documents that have been prepared:	1983 EIR/EIS – Lower Silver Creek Watershed 2000 IS/EA – 1983 Recommended Plan, as modified by the 1998 Plan Update			

I hereby certify that all information contained in this notification is true and correct and that I am authorized to sign this document. I understand that in the event this information is found to be untrue or incorrect, I may be subject to civil or criminal prosecution and the Department may consider this notification to be incomplete and/or cancel any Lake or Streambed Alteration Agreement issued pursuant to this notification. I understand that this notification is valid only for the project described herein and that I may be subject to civil or criminal prosecution for undertaking a project that differs from the one described herein, unless I have notified the Department of that project in accordance with section 1601 or 1603 of the Fish and Game Code.

I understand that a Department representative may need to inspect the property where the project described herein will take place before issuing a Lake or Streambed Alteration Agreement pursuant to this notification. In the event the Department determines that a site inspection is necessary, I hereby authorize the Department to enter the property where the project described herein will take place to inspect the property at any reasonable time and certify that I am authorized to grant the Department permission to access the property.

X *I request the Department to first contact me at (insert telephone number)* (408) 586-0110 *to schedule a date and time to enter the property where the project described herein will take place and understand that this may delay the Department's evaluation of the project described herein.*

Operator or Operator's Representative: _____ _____

4026 2.6

STATE OF CALIFORNIA THE RESOURCES AGENCY
DEPARTMENT OF FISH AND GAME
CENTRAL COAST REGION
(707) 944-5520
Mailing address:
POST OFFICE BOX 47
YOUNTVILLE CALIFORNIA 94599
Street address:
7329 SILVERADO TRAIL
NAPA CALIFORNIA 94558

GRAY DAVIS, GOVERNOR

RECEIVED
JUN 07 2002

RECV'D 6/7/02

CC: M. KLEMENCIC
J. ORTIZ
T. DEAN
R. LANGIS
S. WRIGHTSON
G. FOWLER

June 4, 2002

Notification Number: R3-2001-0132

Stanley Williams / Santa Clara Valley Water District
5750 Almaden Expressway
San Jose, CA 95118

1601 LAKE AND STREAMBED ALTERATION AGREEMENT

This agreement is issued by the Department of Fish and Game pursuant to Division 2, Chapter 6 of the California Fish and Game Code:

WHEREAS, the applicant Stanley Williams / Santa Clara Valley Water District, hereafter called the Operator, submitted a signed NOTIFICATION proposing to substantially divert or obstruct the natural flow of, or substantially change the bed, channel, or bank of, or use material from the streambed or lake of the following water: Lower Silver Creek, located in Township 7S, Range 1E, in the County of Santa Clara, State of California; and

WHEREAS, the Department has determined that such operations may substantially adversely affect existing fish and wildlife resources including water quality, hydrology, aquatic or terrestrial plant or animal species; and

WHEREAS, the project has undergone the appropriate review under the California Environmental Quality Act; and

WHEREAS, the Operator shall undertake the project as proposed in the signed PROJECT DESCRIPTION and PROJECT CONDITIONS (attached). If the Operator changes the project from that described in the PROJECT DESCRIPTION and does not include the PROJECT CONDITIONS, this agreement is no longer valid; and

WHEREAS, the agreement shall expire on December 31, 2006; with the work to occur between April 30 and October 15; and

WHEREAS, nothing in this agreement authorizes the Operator to trespass on any land or property, nor does it relieve the Operator of the responsibility for compliance with applicable Federal, State, or local laws or ordinances. Placement, or removal, of any material below the level of ordinary high water may come under the jurisdiction of the U. S. Army Corps of Engineers pursuant to Section 404 of the Clean Water Act;

THEREFORE, the Operator may proceed with the project as described in the PROJECT DESCRIPTION and PROJECT CONDITIONS. A copy of this agreement, with attached PROJECT DESCRIPTION and PROJECT CONDITIONS, shall be provided to contractors and subcontractors and shall be in their possession at the work site. Failure to comply with all conditions of this agreement may result in legal action.

This agreement is approved by:

Jeni Swanson
for Robert W. Floerke
Regional Manager
Central Coast Region

cc: Wdn. Nores
Lt. Fox
Kristine Atkinson

STATE OF CALIFORNIA THE RESOURCES AGENCY GRAY DAVIS, GOVERNOR
DEPARTMENT OF FISH AND GAME
CENTRAL COAST REGION
(707) 944-5520
Mailing address:
POST OFFICE BOX 47
YOUNTVILLE, CALIFORNIA 94599
Street address:
7329 SILVERADO TRAIL
NAPA, CALIFORNIA 94558

Notification Number: R3-2001-0132
Lower Silver Creek, Santa Clara County

Stanley Williams / Santa Clara Valley Water District
5750 Almaden Expressway
San Jose, CA 95118

PROJECT DESCRIPTION and PROJECT CONDITIONS

Description

The project is located on Lower Silver Creek starting at the confluence of Coyote and Silver Creek and extending 4.6 miles southeast and upstream to the Cunningham Avenue crossing in the City of San Jose in Santa Clara County. The project is limited to the widening and modification of the Lower Silver Creek channel. The project will prevent future bank erosion and property damage by increasing the capacity of this channel system during high flow periods.

The following is a sub-reach by sub-reach description of the Lower Silver Creek Watershed Project. Stationing numbers relay to the typical sections also provided in the notification package. The typical sections for Reaches 4, 5 and 6 are still in draft form and do not show the following:

- Riparian habitat at 2:1 slope along entire west bank between Moss Point Drive and Cunningham Avenue (Reaches 5 & 6 – Phase 1 Plans);
- Pedestrian bridges between Bambi Lane and Dobern Avenue (Reach 4 Plans) and between Lyndale Avenue and Granite Creek Place (Reaches 5 & 6 – Phase 2 Plans);
- Continuous low flow channel through the Jackson Avenue (Reach 4), Capitol Expressway (Reach 4) and Story Road (Reach 5 & 6 – Phase 2 Plans) structures; and
- Lowering of the sediment transport channel between Ocala Avenue and Cunningham Avenue in Reach 6 (Reaches 5 & 6 – Phase 1).

These details will be included in the final plans.

Reaches 1 & 2 (Description refers to attached Plans prepared by MacKay & Somps)

Reach 1a – Station 0+00 to 8+50
This reach will consist of an 850-foot long two-stage earth channel. The channel will have a 3-foot deep sediment transport channel (designed to carry creek forming flows), riparian vegetation and an SRA planting bench. A meandering base-flow channel will form within the soft-bottom sediment transport channel, while the channel invert elevation will be 6 inches to 12 inches above the water table to support emergent marsh. Native riparian trees and shrubs will also be planted on the top of the both banks where space allows. Bio-engineering techniques (willow wattles) will be installed within the SRA planting bench for slope stabilization and habitat value. The north bank will include a maintenance road and a grass-covered floodplain. The structural stability of the SRA planting bench and the maintenance road will require the installation of ¼-ton rock toe protection. The rock toe slope protection (Sheet CD8, detail 2/18) will be covered with earth and planted with willow wattles on the south side (Sheet RD1, detail E/62) and native grasses on the north side. A 1-foot high vortex weir (using ¼ ton rock) grade control structure with low-flow notch will be incorporated just upstream of the Coyote Creek confluence (sheet CD1 and sheet CD10, details 2/20 & A/20). A 5-foot deep by 10-foot wide cross-channel stabilizer will be installed downstream of Wooster Bridge (sheet CD9, detail A/19) between the maintenance road and the SRA bench, it will be constructed of ¼-ton rock lining (with 2-feet deep low-flow notch) to provide grade control. The cross-channel stabilizer will be buried underground and not be visible. The maintenance road, constructed 6 feet above the channel invert, will be made of semi-permeable material (either a Class 2 aggregate base or 6 to 8 inch deep honeycomb cells filled with granular soil).

Reach 1a to Reach 1b Transition– Station 8+50 to 11+50
The 300-foot transition (sheet CD2) will include approximately 200 feet of gabion protected slope on the south bank and a concrete access ramp on the north bank connecting to the planned new bridge at Wooster Bridge (to be constructed by City of San Jose). The sediment transport channel, floodplain, base-flow channel and SRA bench as well as the rock toe protection described for Reach 1a continues through this section.

Reach 1b- Station 11+50 to 13+22
As the available right of way narrows to a 133 feet-wide channel, vegetated gabions are required to protect channel banks. This reach will be 172 feet long. As with other earth bottom reaches, emergent marsh vegetation will be allowed to naturally colonize the bottom of the sediment transport channel. The sediment transport channel, floodplain, base-flow channel and SRA bench as well as the rock toe protection described for Reach 1a continues through this section.

As the creek runs beneath the UPRR bridge the channel narrows to 60 feet (Stations 13+22 to 15+25, sheet CD3) the SRA bench and sediment transport channel will be interrupted as the invert will be protected with a ¼-ton rock lining (including a 2-foot deep low-flow channel). Banks will be protected with air-blown mortar (or ABM, sheet S6, detail A/32).

At a future date when the bridge is replaced and the constriction is eliminated, the two stage channel improvements will be constructed so there is a continuous sediment transport channel

through this area.

Reach 1c – Station 15+25 to 27+71
The vegetated gabion channel (due to tight 120-foot right-of-way) with earth bottom will be 1,250 feet long and will result in the removal of approximately 39,000 square feet (0.9 acres) of 5-inch thick aggregate base and asphalt concrete on existing top-of-bank. The sediment transport channel, floodplain, base-flow channel and SRA bench as well as the earth covered rock toe protection described for Reach 1a continues through this section. Native upland trees, shrubs, and vines will be planted along top of bank, vines and grasses on the gabions (to the extent possible), and trees and shrubs at the base of the south bank gabions.

In the 1998 Plan this reach was described as a concrete-lined section. Using steeper gabions (which may be difficult to revegetate) the District was able to provide a two stage channel with a continuous sediment transport channel through this area.

Reach 1d – Station 27+71 to 37+72
The two-stage earth channel with 2 to 3-foot high floodwalls for freeboard will be 1030 feet long and include a 500-foot section with vegetated gabions on the north bank to protect the slopes from erosive forces. The south bank will be planted with native riparian trees and shrubs to provide shade. The sediment transport channel, floodplain, base-flow channel and SRA bench as well as the rock toe protection described for Reach 1a continues through this section.

Reach 2 – Station 38+57 to 49+98
The architecturally treated rectangular concrete channel, due to very tight 65-foot right-of-way (and adjacent City street), will be 1,140 feet long. The channel will include a low-flow channel to allow continuity of base flows. Sediment will be periodically removed. Native trees and vines will be planted on top of the south and north banks to shade the channel. At Station 50+00, the channel transitions to the existing concrete box culvert at King Road and McKee Road intersection.

In the 1998 Plan this reach was described as a concrete-lined section.

Reach 3 (Description refers to attached Plans prepared by Spomas)

Reach 3a - Station 56+60 to 66+57
The channel transitions from the existing box culvert beneath King and McKee intersection (Sta. 54+00 to 56+60) into a two-stage earth channel that will be 1,260 feet long. Emergent marsh vegetation will naturally colonize the bottom of the sediment transport channel. Floodwalls (approx. 4 feet high) will be constructed for freeboard on the residential [north] side. A combination of levees and overland flow and park access will be constructed on the other. The north bank includes a maintenance road with an adjacent grass covered floodplain. Rock toe slope protection will be added at the base of the SRA planting bench on the south bank and on the north bank below the maintenance road. Toe protection consists of ¼ ton rock riprap and will be planted with native wetland vegetation. The channel has a 3-foot deep sediment transport channel. Riparian trees and shrubs will be planted on south bank and upland native trees and

shrubs on the opposite top of bank. The south bank will be widened up to 100 feet between Stat. 61+16 and Stat. 66+57 to provide additional riparian habitat. A meandering base-flow channel will form within the sediment transport channel.

The reach transitions to the concrete channel between Stations 66+60 and 68+80.

Reach 3b – Station 68+80 to 80+40
The architecturally treated rectangular concrete channel, due to very tight 68-foot right-of-way (and adjacent city street), will be 925 feet long. The channel will include a low-flow channel to allow continuity of base flows. Native trees, shrubs, and vines will be planted along top of banks.

In the 1998 Plan this reach was described as a concrete-lined section.

Reach 3c – Station 80+40 to 101+50
The existing 2000 feet of concrete trapezoidal channel (in very narrow 45-foot right-of-way) will be replaced with a 725-foot rectangular concrete channel (similar to Reach 3b) up to Alum Rock Avenue. Upstream of Alum Rock Avenue, after a 50-foot transition starting at Station 88+63, the existing concrete channel will be replaced by a 1200 feet-long section featuring gabion protection on the north bank and a 2:1 earth slope on the south bank, made possible by a planned purchase of additional right-of-way. The gabion/earth bank section of this reach will include a naturally formed base-flow channel, a sediment transport channel, SRA bank and riparian vegetation on the south bank. This section will also be split by the existing 3-cell culvert at Sunset Avenue. Rock toe slope protection will be added at the base of the SRA planting bench on the south bank and on the north bank below the maintenance road. The toe slope protection will be vegetated as described under Reach 3a. The bridge at Alum Rock Avenue will be replaced. Two additional box culverts will be constructed at Sunset Avenue to increase conveyance capacity. One box culvert will be set lower to allow for continuity of the base flow channel.

In the 1998 Plan this reach was described as a concrete-lined section. The District plans to purchase additional property (approximately 60 feet) so a two stage channel can be constructed including a sediment transport channel, SRA bench, and vegetated earth bank on the south side.

Reach 3d – Station 101+50 to 103+50
The 200 feet long gabion/earth bank channel, made possible through the planned purchase of additional right-of-way, will include a sediment transport channel, a naturally formed base-flow channel, and riparian vegetation (with SRA bench) on the south bank. . Rock toe slope protection will be added at the base of the SRA planting bench on the south bank and on the north bank below the maintenance road. The toe slope protection will be vegetated as described under Reach 3a.

In the 1998 Plan this reach was described as a concrete-lined section. The District plans to purchase additional property (approximately 40 feet) so a two stage channel can be constructed including a sediment transport channel, SRA bench, and vegetated earth bank on the south side.

Reach 3e – Station 106+30 to 115+19
This 880 foot long sub-reach will be rebuilt as a two-stage earth channel with 30-foot bottom width and 145-foot right-of-way and will include a grass floodplain, a sediment transport channel, an SRA bench and a naturally formed base-flow channel. Rock toe slope protection will be added at the base of the SRA planting bench on the south bank and on the north bank below the maintenance road, and will be vegetated as described under Reach 3a. Floodwalls will be installed for freeboard on the residential side. A combination of levees and overland flow and park access will be created on the other side. Riparian trees and shrubs will be planted on south bank, native upland trees will be planted on top of the north bank. Kammerer Avenue Bridge will be replaced with a pedestrian bridge.

Reach 3f – Station 115+19 to 122+42
The earth channel with 30-foot bottom width and 170-foot right-of-way will be 720 feet long and will include a grass floodplain, a naturally formed base-flow channel and a sediment transport channel. The south bank will be widened up to 100 feet between Stat. 115+19 and Stat. 117+33 to provide additional riparian habitat. Rock toe slope protection will be added at the base of the SRA planting bench on the south bank and on the north bank below the maintenance road and will be vegetated as described under Reach 3a. Additional right-of-way will be purchased from the nearby school. Riparian habitat, including shaded riverine aquatic cover, will be planted along the south bank.

Reach 4 (Description refers to attached Plans prepared by Ruggeri-Jensen-Azar)

Reach 4a – Station 127+93 to 130+35
This reach stretches between the downstream end of Jackson Avenue and the upstream end of Interstate 680. The reach consists primarily of a 240-foot U-frame concrete channel with a sediment trap and low flow channel (not shown on typical section, sheet 8) and wing wall transitions to the existing Interstate 680 culvert. The existing trapezoidal concrete channel will be removed. Floodwalls of between 0-4 feet will be constructed as required for freeboard.

Jackson Avenue Bridge and transition to Reach 4b - Station 130+35 to 132+56
This section begins at the downstream end of Jackson Avenue and continues through the transition on the upstream side of the Jackson Avenue Bridge (or 221 feet). New box culverts will be installed under Jackson Avenue. One of the new culverts will be installed approximately 2 feet deeper than the proposed channel bottom invert to provide continuity of the base-flow channel. Upstream of the Jackson Bridge box culverts, the transition includes a ¼ ton rock lining strip and concrete apron incorporating a 2 foot deep base-flow channel (not shown on typical section Sheet 8) to protect the invert. The south (or left bank) has an SRA bench following the transition, while the north (or right) bank contains a 20 foot wide aggregate base maintenance road 2.5 feet above the sediment transport channel bottom and 15 foot wide access ramp to Jackson Avenue. Rock toe protection (1/4 ton rock) will be added to the north bank of the sediment transport channel for structural stability and to protect the SRA bench. The rock toe protection will be planted with native wetland vegetation similarly to Reach 5a/5b (see Reaches 5 & 6-Phase 1 Sheet L9, details 1 & 2). Vegetated blocks provide slope protection for the north and

south banks. Flood walls of approximately 4 ft above grade are required for this entire section.

Reach 4b Station 132+56 to 153+85
This reach extends from the end of the Jackson Avenue transition to the downstream end of the Capitol Expressway downstream transition. Emergent marsh vegetation will naturally colonize the earthen bottom of the sediment transport channel. A meandering base-flow channel will form within the sediment transport channel. Rock toe protection (¼ ton rock) will be added to north and south left and right banks of the sediment transport channel for structural stability and to protect the restored aquatic habitat. The rock toe protection will be covered with vegetation as described under Reach 4a. The south bank will have a 5 foot wide shaded riverine aquatic (SRA) bench that will be planted with riparian trees and shrubs for SRA cover, while the north bank will include a 20 foot wide aggregate base maintenance road 2.5 feet above the sediment transport channel bottom and a 15 foot wide access ramp to Jackson Avenue at the downstream end. Vegetated blocks provide slope protection for the north and south banks. Floodwalls are required at heights up to 4 feet at the downstream end of the channel, with a gradual height decline further upstream.

A new full-span pedestrian bridge will be constructed near Station 143+00. The proposed bridge will not affect the channel configuration or flood protection or revegetation features.

Capitol Expressway Bridge and transition – Station 153+86 to 157+60
This section spans the length of Capitol Expressway and the upstream and downstream transitions. A new box culvert will be installed under Capitol Expressway. The new culvert invert will be approximately 2 feet deeper than the proposed channel bottom invert to provide continuity with the base-flow channel. Upstream of the Capitol Expressway Bridge box culverts, the transition includes a ¼ ton rock lining strip and concrete apron, incorporating a 2 foot deep base-flow channel to protect the invert (not shown on typical section, Sheet 8). There are 15 foot wide access ramps to the downstream and upstream sides of Capitol Expressway. No flood walls are required for this entire section.

Reach 4c – Station 157+61 to 170+08
This reach extends from the end of the upstream end of the Capitol Expressway transition to the upstream end of Reach 4. Emergent marsh vegetation will naturally colonize the earthen bottom of the sediment transport channel. A meandering base-flow channel will form in the sediment transport channel bottom. Rock toe protection (1/4 ton rock) will be added to north and south banks of the sediment transport channel for structural stability and to protect the restored habitat. The south bank will have a shaded riverine aquatic (SRA) bench that will be planted with riparian trees and shrubs for SRA cover, while the north bank contains a 20 foot wide aggregate base maintenance road 2.5 feet above the sediment transport channel bottom. Vegetated blocks provide slope protection for the north and south banks. Floodwalls are required in some upstream areas at heights up to 2 feet.

Reaches 5 & 6 (Description refers to attached Phase 2 and Phase 1 Construction Plans prepared by Parsons Engineering Science)

Reach 5a/5b – Station 170+08 to 199+60 (refer to Phase 2 Construction Plan)
This reach extends from the end of the end of Reach 4 to the upstream end of Murtha Drive. Emergent marsh vegetation will naturally colonize the earthen bottom of the sediment transport channel. A meandering base-flow channel will form in the sediment transport channel bottom. The west bank has a shaded riverine aquatic (SRA) bench that will be planted with riparian trees and shrubs for SRA cover, while the east bank contains a 20 foot wide aggregate base maintenance road 2.5 feet above the sediment transport channel bottom. Rock toe protection (1/4 ton rock) will be added to both banks of the sediment transport channel for structural stability and to protect restored aquatic habitat. Bioengineered riprap will provide the toe protection (Sheet L9, details 1 & 2) and include native wetland vegetation on both banks while contributing to the SRA cover through the addition of willow stakes on the south bank (Sheet L10, detail 7). Vegetated blocks provide slope protection for the east and west banks. Floodwalls are required in most of the reach in heights up to 5 feet.

A new concrete box will be constructed to convey water from North Babb Creek into the sediment transport channel.

A new full-span pedestrian bridge will be constructed near Station 171+40. The bridge will not affect the channel configuration, flood protection or revegetation features.

A new box culvert will be installed under Story Road. The new culvert invert will be approximately 2 feet deeper than the proposed channel invert to provide continuity with the base-flow channel. Upstream of the Story Bridge box culverts, the transition includes a ¼ ton rock lining strip and concrete apron incorporating a 2 feet deep base-flow to protect the invert. There are 15 foot wide access ramps to the downstream and upstream sides of Capitol Expressway. The existing culvert extending approximately 150 downstream of Story Road will be removed and the hybrid vegetated block wall with earthern sediment transport channel described under Reach 5a/5b will be continued to Story Road.

Reach 5c/6a – Station 199+61 to 217+54 (Refer to Phase 1 Construction Plan)
This reach extends from Murtha Avenue to the upstream end of Moss Point Drive. Emergent marsh vegetation will naturally colonize the earthen bottom of the sediment transport channel. A meandering base-flow channel will form in the sediment transport channel bottom. Rock toe protection (1/4 ton rock) will be added to east and west banks of the sediment transport channel for structural stability and to protect restored habitat, as described under Reach 5a/5b. The west bank will have a 5 foot shaded riverine aquatic (SRA) bench that will be planted with riparian trees and shrubs for SRA cover, while the east bank will contains a 20 foot wide aggregate base maintenance road 2.5 feet above the sediment transport channel bottom. Vegetated blocks will provide slope protection on both banks. Floodwalls are required in some areas at heights up to 1.5 feet.

A new concrete box will be constructed to convey water from South Babb Creek into the sediment transport channel.

Reach 6b - Station 217+55 to 244+36 (Refer to Phase 1 Construction Plan)
This reach extends from Moss Point Drive to the downstream end of Cunningham Avenue. Emergent marsh vegetation will naturally colonize the earthen bottom of the sediment transport channel. A meandering base-flow channel will form in the sediment transport channel bottom. Rock toe protection (1/4 ton rock) will be added to east and west banks of the sediment transport channel for structural stability and to protect restored habitat, as described under Reach 5a/5b. Riparian trees and shrubs will be planted on the west bank to create a 2:1 slope riparian habitat area throughout this subreach, while vegetated blocks will protect the east bank. Quarter ton rock will protect the base of the riparian habitat slope from erosion. The east bank will include a 20 foot wide aggregate base maintenance road 2.5 feet above the sediment transport channel bottom. Floodwalls are required in most areas at heights up to 3.5 feet.

Conditions

1. The time limit for completing the work subject to this agreement shall be confined to the period of April 30 to October 15 of any year, except as otherwise stipulated in this Agreement. Any exception of this time restriction shall be handled on an individual site-specific basis.

2. Final construction plans shall be submitted to the Department prior to construction. The Operator shall notify the Department of any modifications make to the project description as stated above. At the discretion of the Department, project modifications may require an amendment or a new application.

3. Disturbance or removal of vegetation shall not exceed the minimum necessary to complete operations. Precautions shall be taken to avoid other damage to vegetation by people or equipment. The disturbed portions of any stream channel within the high water mark of the stream or lake shall be restored to as near their original condition as possible.

4. Revegetation and replacement plantings shall consist of locally obtained, native species, from the Lower Silver Creek or Coyote Creek watersheds.

5. Revegetation will be implemented as described in Section 6 of the Lower Silver Creek Watershed Mitigation and Monitoring Program (December 2001). Planting densities shall be and average of 12-foot centers for trees, 6-foot centers for shrubs, and willow cuttings or willow wattle bundles shall be placed on 6-foot centers. Monitoring shall be conducted for ten (10) years, in years 1, 2, 3, 5, 7 and 10 as described in Section 7 of the Mitigation and Monitoring Program. The following success criteria shall apply:

    a. At the end of three (3) years there shall be 80% or greater survival of all planted material. If at the end of three (3) years there is less than 80% survival, all dead plants shall be replaced and a contingency plan correcting maintenance problems shall be submitted to the Department.
    b. After the first 3 years success criteria shall as described in section 4 of the Mitigation and Monitoring Program (December 2001) which reads as follows:

- By year 5, all self-sustaining planted stock (trees and shrubs) must have either 70 percent survival or the revegetation sites must have an absolute woody vegetation canopy cover of 30 percent or greater within a specific sub-reach planting site.
- At year 10, the average absolute woody vegetation canopy cover of trees and shrubs must show a steady trend towards 70 percent or greater, and no less than 50 percent absolute woody vegetation canopy cover of trees and shrubs species is to occur at any revegetation site.

6. An annual monitoring report shall be submitted to the Department for the duration of mitigation monitoring no later than April 1 of the following year after fall monitoring.

7. Rock, riprap, or other erosion protection shall be placed in areas where vegetation cannot reasonably be expected to become reestablished.

8. Installation of bridges, culverts, or other structures shall be such that water flow is not impaired and upstream or downstream passage of fish is assured at all times. Bottoms of temporary culverts shall be placed at or below stream channel grade.

9. In ephemeral streams, it is anticipated that all construction shall be done while the work site is dry and that vehicles shall not be driven or equipment operated in water covered portions of the stream, or where wetland vegetation, riparian vegetation or aquatic organisms may be destroyed, except as otherwise provided for in the Agreement and as necessary to complete authorized work. Excavated material shall be placed outside the stream's ordinary high water mark on dry portions within the stream's ordinary high water mark when the material is placed on filter fabric.

10. When work in a flowing stream is unavoidable, the entire streamflow shall be diverted around the work area by a barrier, temporary culvert, and/or a new channel capable of permitting upstream and downstream fish movement. Construction of the barrier and/or the new channel shall normally begin in the downstream area and continue in an upstream direction, and the flow shall be diverted only when construction of the diversion is completed. The water diversion plan shall allow stream flows to gravity flow around or through the work site using temporary culverts or stream flow is pumped around the work site using pumps and screened hoses. Coffer dam construction shall be adequate to prevent seepage into or from the work area. Coffer dams and/or in-channel berms shall be constructed of river run gravel with a fines content that is less than 15%. Fines are defined as material that is able to pass through a #20 sieve. Coffer dams shall be installed both upstream and downstream not more than 50 feet from the extent of the work area. The entire work area shall be dewatered. The enclosure and the supportive material shall be removed when the work is completed and the removal shall normally proceed from downstream in an upstream direction. Normal flows shall be restored to the affected stream immediately upon completion of work at that location.

11. During dewatering operations, the operator shall check for stranded fish and all reasonable efforts shall be made to capture and move all stranded fish observed in the dewatered area by a qualified biologist holding a valid Scientific Collecting Permit.

Captured fish shall be released immediately upstream of the work site in the wetted channel.

12. No other diversion method shall be used without authorization of the Department. If another diversion method is preferred, the Operator shall submit a plan detailing the desired diversion method. Authorization of any other diversion method shall be at the discretion of the Department.

13. When any dam (any artificial obstruction) is being constructed, maintained, or placed in operation, sufficient water shall at all times be allowed to pass downstream to maintain fishlife below the dam pursuant to Fish and Game Code Section 5937.

14. Erosion control measures shall be utilized throughout all phases of operation where sediment runoff from exposed slopes threatens to enter waters of the State. At no time shall silt laden runoff be allowed to enter the stream or be placed where it may enter the stream.

15. Staging and storage areas for equipment, materials, fuels, lubricants, and solvents, shall be located outside of the stream channel and banks. Stationary equipment such as motors, pumps, generators, compressors, and welders, located within or adjacent to the streams shall be positioned over drip pans. Any equipment or vehicles driven and/or operated within or adjacent to the stream shall be checked and maintained daily, to prevent leaks of materials that if introduced to water could be deleterious to aquatic life. Vehicles shall be moved away from the stream prior to refueling and lubrication.

16. No equipment will be operated in live stream channels.

17. Wash water containing mud or silt from aggregate washing or other operations shall not be allowed to enter a lake or flowing stream.

18. Silty/turbid water from the excavation and/or project activities shall not be discharged into the stream, lake, or into storm drains. Such water shall be pumped into holding facility or into a settling pond located in flat stable areas outside of the stream channel, or sprayed over a large area outside the stream channel or lake to allow for natural filtration of sediments. At no time shall turbid water from the settling ponds be allowed to enter back into the stream channel until water is clear of silt. Stream turbidity adjacent to and immediately downstream of the project site shall not exceed 50 NTU's above background levels.

19. Preparation shall be made so that runoff from steep, erodable surfaces will be diverted into stable areas with little erosion potential. Frequent water checks shall be placed on dirt roads, cat tracks, or other work trails to control erosion.

20. Poured concrete shall be excluded from the wetted channel for a period of two (2) weeks after it is poured. During that time the poured concrete shall be kept moist, and runoff from the wet sacked concrete shall not be allowed to enter a live stream. Commercial

sealants (e.g. Deep Seal, Elasto-Deck BT Reservoir Grade) may be applied to the poured concrete surfaced where difficulty in excluding water flow for a long period may occur. If sealant is used, water shall be excluded from the site until the sealant is dry.

21. If a stream channel has been altered during the operations, its low flow channel shall be returned as nearly as possible to its natural state without creating a possible future bank erosion problem, or a flat wide channel or sluice-like area. The gradient of the streambed shall be as nearly as possible the same gradient as existed prior to disturbance.

22. Structures and associated materials not designed to withstand high seasonal flows shall be removed to areas above the high water mark below such flows occur.

23. Not more than two weeks prior to project construction, a survey shall be conducted by a qualified biologist for nesting raptors. If raptors are nesting, there shall be no impacts to habitat within 300 feet of the raptor nests trees during the nesting season. The survey results shall be reported in writing to the Department Regional Office.

24. Not more than two weeks prior to project construction, a survey shall be conducted by a qualified biologist for nesting migratory birds. If migratory birds are nesting, there shall be no impacts to those areas until nesting activity is completed and birds are no longer present. The survey results shall be reported in writing to the Department Regional Office.

25. The project site has been identified as an area that is potentially inhabited by a threatened species, California red-legged frog and steelhead. The operator is required to comply with all applicable state and federal laws, including the California and Federal Endangered Species Acts. This agreement does not authorize the take of any state or federally listed species.

26. By May 1 of each year after the project commences, the operator shall submit to the Department a status report describing progress made during the previous construction season, dates of the construction season, any problems encountered during the work, and the status on revegetation of disturbed sites.

27. The operator will notify the Department of Fish and Game of the date of commencement of operations and the date of completion of operations at least five days prior to such operations.

If the Operator needs more time to complete the authorized activity, the work period may be extended on a day-to-day basis by Margaret Roper at (408)843-8917, or alternatively, to the Yountville office at 707-944-5520. 2

A copy of this agreement must be provided to the contractor and all subcontractors who work

within the stream zone and must be in their possession at the work site.

Building materials and/or construction equipment shall not be stockpiled or stored where they could be washed into the water or where they will cover aquatic or riparian vegetation.

Debris, soil, silt, bark, rubbish, creosote-treated wood, raw cement/concrete or washings thereof, asphalt, paint or other coating material, oil or other petroleum products, or any other substances which could be hazardous to aquatic life, resulting from project related activities, shall be prevented from contaminating the soil and/or entering the waters of the state. Any of these materials, placed within or where they may enter a stream or lake, by Operator or any party working under contract, or with the permission of the Operator, shall be removed immediately.

The contractor shall not dump any litter or construction debris within the riparian/stream zone. All such debris and waste shall be picked up daily and properly disposed of at an appropriate site.

The Operator is liable for compliance with the terms of this Agreement, including violations committed by the contractors and/or subcontractors. The Department reserves the right to suspend construction activity described in this Agreement if the Department determines any of the following has occurred:

A). Failure to comply with any of the conditions of this Agreement

B). Information provided in support of the Agreement is determined by the Department to be inaccurate.

C). Information becomes available to the Department that was not known when preparing the original conditions of this Agreement (including, but not limited to, the occurrence of State or federally listed species in the area or risk to resources not previously observed)

D).The project as described in the Agreement has changed or conditions affecting fish and wildlife resources change.

Any violation of the terms of this Agreement may result in the project being stopped, a citation being issued, or charges being filed with the District Attorney. Contractors and subcontractors may also be liable for violating the conditions of this agreement.

Department personnel or its agents may inspect the work site at any time.

Amendments and Renewals

The Operator shall notify the Department before any modifications are made in the project plans submitted to the Department. Project modifications may require an amendment or a new notification.

This Agreement is transferable to subsequent owners of the project property by requesting an amendment.

To renew the Agreement beyond the expiration date, a written request for a renewal must be submitted to the Department (1600 Program, Post Office Box 47, Yountville, California 94599) for consideration at least 30 days before the Agreement expiration date. A renewal requires a

fee. The Fee Schedule can be obtained at www.dfg.ca.gov/1600 or by phone at (707) 944-5520. Renewals of the original Agreement are issued at the discretion of the Department.

To modify the project, a written request for an amendment must be submitted to the Department (1600 Program, Post Office Box 47, Yountville, California 94599). The fee for an amendment is one-half (½) of the original fee. Amendments to the original Agreement are issued at the discretion of the Department.

Please note that you may not proceed with construction until your proposed project has undergone CEQA review and the Department signs the Agreement.

I, the undersigned, state that the above is the final description of the project I am submitting to the Department for CEQA review, leading to an Agreement, and agree to implement the conditions above required by the Department as part of that project. I will not proceed with this project until the Department signs the Agreement. I also understand that the CEQA review may result in the addition of measures to the project to avoid, minimize, or compensate for significant environmental impacts:

Operator's name (print): Stanley M. Williams

Operator's signature: Stanley M Williams

Signed the 28th **day of** May **, 2002**

STATE OF CALIFORNIA THE RESOURCES AGENCY

ARNOLD SCHWARZENEGGER, GOVERNOR

DEPARTMENT OF FISH AND GAME
CENTRAL COAST REGION
(707) 944-5520
Mailing address:
POST OFFICE BOX 47
YOUNTVILLE CALIFORNIA 94599
Street address:
7329 SILVERADO TRAIL
NAPA CALIFORNIA 94558

CC: C. Fowler
S. Bui
S. Dharasker
R. Langis

December 22, 2006

Notification Number: R3-2001-0132

Mr. Marc Klemencic
Santa Clara Valley Water District
5750 Almaden Expressway
San Jose, CA 95118

Streambed Alteration Agreement Extension
Lower Silver Creek
Santa Clara County

Dear Mr. Klemencic:

By this letter, the Department of Fish and Game is renewing the above agreement until December 31, 2011 with the construction period to occur between April 30 and October 15. All of the conditions of the original agreement (Notification Number R3-2001-0132) are to remain in effect.

Please keep this letter and the attached copy of your agreement (Notification Number R3-2001-0132) available on site for inspection by Department personnel.

Sincerely,

Charles Armor
Acting Regional Manager
Central Coast Region

Enclosure: Notification Number R3-2001-0132

cc: Tami Schane
Lieutenant Nores
Scott Wilson
Greg Martinelli

FOR DEPARTMENT USE ONLY				
Date Received	Fee Enclosed	Approved?	Date Approved	Expiration Date
11/30/06	$ 200.00	☐ Yes ☐ No		

#1549
ERIC M. EVANS

SCHANE
LT. NORES

STATE OF CALIFORNIA
DEPARTMENT OF FISH AND GAME

REQUEST TO EXTEND
LAKE OR STREAMBED ALTERATION AGREEMENT

Complete EACH field and attach additional pages if necessary. Please refer to the fee schedule and submit the correct fee with extension request.

1. APPLICANT REQUESTING EXTENSION

If the applicant is a business, agency, or utility, please include the name of the applicant's representative, who should be an employee of the applicant.

Name	Marc Klemencic		
Business/Agency	Santa Clara Valley Water District		
Street Address	5750 Almaden Expressway		
City, State, Zip	San Jose, CA 95118		
Telephone	(408) 265-2607	Fax	(408) 979-5611
Email	MKlemencic@valleywater.org		

Fish & Game
NOV 30 2006
Yountville

2. PROJECT INFORMATION

Agreement number	R3-2001-0132
Original expiration date	12/31/06
New expiration date requested	12/31/11

Specify: 1) the work that has been completed; 2) the work that needs to be completed; and 3) the amount of time needed to complete the work.

As of April 2006, all work described in the current Agreement from the confluence with Coyote Creek to I-680 (Reaches 1 through 3) has been completed. Work that needs to be completed is also described in the Agreement and includes all channel improvements from I-680 to Cunningham Avenue (Reaches 4 through 6). The time needed to complete the work is estimated to be 5 years.

☐ Continued on additional page(s)

REQUEST TO EXTEND LAKE OR STREAMBED ALTERATION AGREEMENT

2. PROJECT INFORMATION, continued.

Specify the reason(s) for the extension request
Work between I-680 and Cunningham Avenue (Reaches 4 through 6) was delayed in calendar year 2006 due to lack of funding. The Water District believes that changes in the State public funding environment for infrastructure projects, including flood protection projects, resulting from the recent passage of the State-wide bonds and funding of the State's Flood Control Subventions Program, will allow for construction of the remainder of the project. Lower Silver Creek is a high priority project for the Water District. When completed it will provide flood protection for over 5,000 homes, schools, and businesses on the east side of San Jose. ☐ Continued on additional page(s)

Note: The Department may not process this extension request until the extension fee has been received.

3. SIGNATURE

I hereby certify that to the best of my knowledge the information in this extension request ("request") is true and correct and that I am authorized to sign this request as, or on behalf of, the applicant. I understand that if any information in this request is found to be untrue or incorrect, the Department may suspend processing this request. I understand also that if any information in this request is found to be untrue or incorrect, I and/or the applicant may be subject to civil or criminal prosecution.

Signature of Applicant or Applicant's Authorized Representative

11/29/06
Date

Marc Klemencic
Print Name

Note: If approved, a copy of this form must be available at the work site with the original agreement.

STATE OF CALIFORNIA THE RESOURCES AGENCY
DEPARTMENT OF FISH AND GAME
CENTRAL COAST REGION
(707) 944-5520
Mailing address:
POST OFFICE BOX 47
YOUNTVILLE CALIFORNIA 94599
Street address:
7329 SILVERADO TRAIL
NAPA CALIFORNIA 94558

GRAY DAVIS, GOVERNOR

June 4, 2002

Notification Number: R3-2001-0132

Stanley Williams / Santa Clara Valley Water District
5750 Almaden Expressway
San Jose, CA 95118

1601 LAKE AND STREAMBED ALTERATION AGREEMENT

This agreement is issued by the Department of Fish and Game pursuant to Division 2, Chapter 6 of the California Fish and Game Code:

WHEREAS, the applicant Stanley Williams / Santa Clara Valley Water District, hereafter called the Operator, submitted a signed NOTIFICATION proposing to substantially divert or obstruct the natural flow of, or substantially change the bed, channel, or bank of, or use material from the streambed or lake of the following water: Lower Silver Creek, located in Township 7S, Range 1E, in the County of Santa Clara, State of California; and

WHEREAS, the Department has determined that such operations may substantially adversely affect existing fish and wildlife resources including water quality, hydrology, aquatic or terrestrial plant or animal species; and

WHEREAS, the project has undergone the appropriate review under the California Environmental Quality Act; and

WHEREAS, the Operator shall undertake the project as proposed in the signed PROJECT DESCRIPTION and PROJECT CONDITIONS (attached). If the Operator changes the project from that described in the PROJECT DESCRIPTION and does not include the PROJECT CONDITIONS, this agreement is no longer valid; and

WHEREAS, the agreement shall expire on December 31, 2006; with the work to occur between April 30 and October 15; and

WHEREAS, nothing in this agreement authorizes the Operator to trespass on any land or property, nor does it relieve the Operator of the responsibility for compliance with applicable Federal, State, or local laws or ordinances. Placement, or removal, of any material below the level of ordinary high water may come under the jurisdiction of the U. S. Army Corps of Engineers pursuant to Section 404 of the Clean Water Act;

THEREFORE, the Operator may proceed with the project as described in the PROJECT DESCRIPTION and PROJECT CONDITIONS. A copy of this agreement, with attached PROJECT DESCRIPTION and PROJECT CONDITIONS, shall be provided to contractors and subcontractors and shall be in their possession at the work site. Failure to comply with all conditions of this agreement may result in legal action.

This agreement is approved by:

Jeni Swanson
for Robert W. Floerke
Regional Manager
Central Coast Region

cc: Wdn. Nores
Lt. Fox
Kristine Atkinson

STATE OF CALIFORNIA THE RESOURCES AGENCY
DEPARTMENT OF FISH AND GAME
CENTRAL COAST REGION
(707) 944-5520
Mailing address:
POST OFFICE BOX 47
YOUNTVILLE, CALIFORNIA 94599
Street address:
7329 SILVERADO TRAIL
NAPA, CALIFORNIA 94558

GRAY DAVIS, GOVERNOR

Notification Number: R3-2001-0132
Lower Silver Creek, Santa Clara County

Stanley Williams / Santa Clara Valley Water District
5750 Almaden Expressway
San Jose, CA 95118

PROJECT DESCRIPTION and PROJECT CONDITIONS

Description

The project is located on Lower Silver Creek starting at the confluence of Coyote and Silver Creek and extending 4.6 miles southeast and upstream to the Cunningham Avenue crossing in the City of San Jose in Santa Clara County. The project is limited to the widening and modification of the Lower Silver Creek channel. The project will prevent future bank erosion and property damage by increasing the capacity of this channel system during high flow periods.

The following is a sub-reach by sub-reach description of the Lower Silver Creek Watershed Project. Stationing numbers relay to the typical sections also provided in the notification package. The typical sections for Reaches 4, 5 and 6 are still in draft form and do not show the following:

- Riparian habitat at 2:1 slope along entire west bank between Moss Point Drive and Cunningham Avenue (Reaches 5 & 6 – Phase 1 Plans);
- Pedestrian bridges between Bambi Lane and Dobern Avenue (Reach 4 Plans) and between Lyndale Avenue and Granite Creek Place (Reaches 5 & 6 – Phase 2 Plans);
- Continuous low flow channel through the Jackson Avenue (Reach 4), Capitol Expressway (Reach 4) and Story Road (Reach 5 & 6 – Phase 2 Plans) structures; and
- Lowering of the sediment transport channel between Ocala Avenue and Cunningham Avenue in Reach 6 (Reaches 5 & 6 – Phase 1).

These details will be included in the final plans.

Reaches 1 & 2 (Description refers to attached Plans prepared by MacKay & Somps)

Reach 1a – Station 0+00 to 8+50
This reach will consist of an 850-foot long two-stage earth channel. The channel will have a 3-foot deep sediment transport channel (designed to carry creek forming flows), riparian vegetation and an SRA planting bench. A meandering base-flow channel will form within the soft-bottom sediment transport channel, while the channel invert elevation will be 6 inches to 12 inches above the water table to support emergent marsh. Native riparian trees and shrubs will also be planted on the top of the both banks where space allows. Bio-engineering techniques (willow wattles) will be installed within the SRA planting bench for slope stabilization and habitat value. The north bank will include a maintenance road and a grass-covered floodplain. The structural stability of the SRA planting bench and the maintenance road will require the installation of ¼-ton rock toe protection. The rock toe slope protection (Sheet CD8, detail 2/18) will be covered with earth and planted with willow wattles on the south side (Sheet RD1, detail E/62) and native grasses on the north side. A 1-foot high vortex weir (using ¼ ton rock) grade control structure with low-flow notch will be incorporated just upstream of the Coyote Creek confluence (sheet CD1 and sheet CD10, details 2/20 & A/20). A 5-foot deep by 10-foot wide cross-channel stabilizer will be installed downstream of Wooster Bridge (sheet CD9, detail A/19) between the maintenance road and the SRA bench, it will be constructed of ¼-ton rock lining (with 2-feet deep low-flow notch) to provide grade control. The cross-channel stabilizer will be buried underground and not be visible. The maintenance road, constructed 6 feet above the channel invert, will be made of semi-permeable material (either a Class 2 aggregate base or 6 to 8 inch deep honeycomb cells filled with granular soil).

Reach 1a to Reach 1b Transition– Station 8+50 to 11+50
The 300-foot transition (sheet CD2) will include approximately 200 feet of gabion protected slope on the south bank and a concrete access ramp on the north bank connecting to the planned new bridge at Wooster Bridge (to be constructed by City of San Jose). The sediment transport channel, floodplain, base-flow channel and SRA bench as well as the rock toe protection described for Reach 1a continues through this section.

Reach 1b- Station 11+50 to 13+22
As the available right of way narrows to a 133 feet-wide channel, vegetated gabions are required to protect channel banks. This reach will be 172 feet long. As with other earth bottom reaches, emergent marsh vegetation will be allowed to naturally colonize the bottom of the sediment transport channel. The sediment transport channel, floodplain, base-flow channel and SRA bench as well as the rock toe protection described for Reach 1a continues through this section.

As the creek runs beneath the UPRR bridge the channel narrows to 60 feet (Stations 13+22 to 15+25, sheet CD3) the SRA bench and sediment transport channel will be interrupted as the invert will be protected with a ¼-ton rock lining (including a 2-foot deep low-flow channel). Banks will be protected with air-blown mortar (or ABM, sheet S6, detail A/32).

At a future date when the bridge is replaced and the constriction is eliminated, the two stage channel improvements will be constructed so there is a continuous sediment transport channel

through this area.

Reach 1c – Station 15+25 to 27+71
The vegetated gabion channel (due to tight 120-foot right-of-way) with earth bottom will be 1,250 feet long and will result in the removal of approximately 39,000 square feet (0.9 acres) of 5-inch thick aggregate base and asphalt concrete on existing top-of-bank. The sediment transport channel, floodplain, base-flow channel and SRA bench as well as the earth covered rock toe protection described for Reach 1a continues through this section. Native upland trees, shrubs, and vines will be planted along top of bank, vines and grasses on the gabions (to the extent possible), and trees and shrubs at the base of the south bank gabions.

In the 1998 Plan this reach was described as a concrete-lined section. Using steeper gabions (which may be difficult to revegetate) the District was able to provide a two stage channel with a continuous sediment transport channel through this area.

Reach 1d – Station 27+71 to 37+72
The two-stage earth channel with 2 to 3-foot high floodwalls for freeboard will be 1030 feet long and include a 500-foot section with vegetated gabions on the north bank to protect the slopes from erosive forces. The south bank will be planted with native riparian trees and shrubs to provide shade. The sediment transport channel, floodplain, base-flow channel and SRA bench as well as the rock toe protection described for Reach 1a continues through this section.

Reach 2 – Station 38+57 to 49+98
The architecturally treated rectangular concrete channel, due to very tight 65-foot right-of-way (and adjacent City street), will be 1,140 feet long. The channel will include a low-flow channel to allow continuity of base flows. Sediment will be periodically removed. Native trees and vines will be planted on top of the south and north banks to shade the channel. At Station 50+00, the channel transitions to the existing concrete box culvert at King Road and McKee Road intersection.

In the 1998 Plan this reach was described as a concrete-lined section.

Reach 3 (Description refers to attached Plans prepared by Spomas)

Reach 3a - Station 56+60 to 66+57
The channel transitions from the existing box culvert beneath King and McKee intersection (Sta. 54+00 to 56+60) into a two-stage earth channel that will be 1,260 feet long. Emergent marsh vegetation will naturally colonize the bottom of the sediment transport channel. Floodwalls (approx. 4 feet high) will be constructed for freeboard on the residential [north] side. A combination of levees and overland flow and park access will be constructed on the other. The north bank includes a maintenance road with an adjacent grass covered floodplain. Rock toe slope protection will be added at the base of the SRA planting bench on the south bank and on the north bank below the maintenance road. Toe protection consists of ¼ ton rock riprap and will be planted with native wetland vegetation. The channel has a 3-foot deep sediment transport channel. Riparian trees and shrubs will be planted on south bank and upland native trees and

shrubs on the opposite top of bank. The south bank will be widened up to 100 feet between Stat. 61+16 and Stat. 66+57 to provide additional riparian habitat. A meandering base-flow channel will form within the sediment transport channel.

The reach transitions to the concrete channel between Stations 66+60 and 68+80.

Reach 3b – Station 68+80 to 80+40
The architecturally treated rectangular concrete channel, due to very tight 68-foot right-of-way (and adjacent city street), will be 925 feet long. The channel will include a low-flow channel to allow continuity of base flows. Native trees, shrubs, and vines will be planted along top of banks.

In the 1998 Plan this reach was described as a concrete-lined section.

Reach 3c – Station 80+40 to 101+50
The existing 2000 feet of concrete trapezoidal channel (in very narrow 45-foot right-of-way) will be replaced with a 725-foot rectangular concrete channel (similar to Reach 3b) up to Alum Rock Avenue. Upstream of Alum Rock Avenue, after a 50-foot transition starting at Station 88+63, the existing concrete channel will be replaced by a 1200 feet-long section featuring gabion protection on the north bank and a 2:1 earth slope on the south bank, made possible by a planned purchase of additional right-of-way. The gabion/earth bank section of this reach will include a naturally formed base-flow channel, a sediment transport channel, SRA bank and riparian vegetation on the south bank. This section will also be split by the existing 3-cell culvert at Sunset Avenue. Rock toe slope protection will be added at the base of the SRA planting bench on the south bank and on the north bank below the maintenance road. The toe slope protection will be vegetated as described under Reach 3a. The bridge at Alum Rock Avenue will be replaced. Two additional box culverts will be constructed at Sunset Avenue to increase conveyance capacity. One box culvert will be set lower to allow for continuity of the base flow channel.

In the 1998 Plan this reach was described as a concrete-lined section. The District plans to purchase additional property (approximately 60 feet) so a two stage channel can be constructed including a sediment transport channel, SRA bench, and vegetated earth bank on the south side.

Reach 3d – Station 101+50 to 103+50
The 200 feet long gabion/earth bank channel, made possible through the planned purchase of additional right-of-way, will include a sediment transport channel, a naturally formed base-flow channel, and riparian vegetation (with SRA bench) on the south bank. . Rock toe slope protection will be added at the base of the SRA planting bench on the south bank and on the north bank below the maintenance road. The toe slope protection will be vegetated as described under Reach 3a.

In the 1998 Plan this reach was described as a concrete-lined section. The District plans to purchase additional property (approximately 40 feet) so a two stage channel can be constructed including a sediment transport channel, SRA bench, and vegetated earth bank on the south side.

Reach 3e – Station 106+30 to 115+19
This 880 foot long sub-reach will be rebuilt as a two-stage earth channel with 30-foot bottom width and 145-foot right-of-way and will include a grass floodplain, a sediment transport channel, an SRA bench and a naturally formed base-flow channel. Rock toe slope protection will be added at the base of the SRA planting bench on the south bank and on the north bank below the maintenance road, and will be vegetated as described under Reach 3a. Floodwalls will be installed for freeboard on the residential side. A combination of levees and overland flow and park access will be created on the other side. Riparian trees and shrubs will be planted on south bank, native upland trees will be planted on top of the north bank. Kammerer Avenue Bridge will be replaced with a pedestrian bridge.

Reach 3f – Station 115+19 to 122+42
The earth channel with 30-foot bottom width and 170-foot right-of-way will be 720 feet long and will include a grass floodplain, a naturally formed base-flow channel and a sediment transport channel. The south bank will be widened up to 100 feet between Stat. 115+19 and Stat. 117+33 to provide additional riparian habitat. Rock toe slope protection will be added at the base of the SRA planting bench on the south bank and on the north bank below the maintenance road and will be vegetated as described under Reach 3a. Additional right-of-way will be purchased from the nearby school. Riparian habitat, including shaded riverine aquatic cover, will be planted along the south bank.

Reach 4 (Description refers to attached Plans prepared by Ruggeri-Jensen-Azar)

Reach 4a – Station 127+93 to 130+35
This reach stretches between the downstream end of Jackson Avenue and the upstream end of Interstate 680. The reach consists primarily of a 240-foot U-frame concrete channel with a sediment trap and low flow channel (not shown on typical section, sheet 8) and wing wall transitions to the existing Interstate 680 culvert. The existing trapezoidal concrete channel will be removed. Floodwalls of between 0-4 feet will be constructed as required for freeboard.

Jackson Avenue Bridge and transition to Reach 4b - Station 130+35 to 132+56
This section begins at the downstream end of Jackson Avenue and continues through the transition on the upstream side of the Jackson Avenue Bridge (or 221 feet). New box culverts will be installed under Jackson Avenue. One of the new culverts will be installed approximately 2 feet deeper than the proposed channel bottom invert to provide continuity of the base-flow channel. Upstream of the Jackson Bridge box culverts, the transition includes a ¼ ton rock lining strip and concrete apron incorporating a 2 foot deep base-flow channel (not shown on typical section Sheet 8) to protect the invert. The south (or left bank) has an SRA bench following the transition, while the north (or right) bank contains a 20 foot wide aggregate base maintenance road 2.5 feet above the sediment transport channel bottom and 15 foot wide access ramp to Jackson Avenue. Rock toe protection (1/4 ton rock) will be added to the north bank of the sediment transport channel for structural stability and to protect the SRA bench. The rock toe protection will be planted with native wetland vegetation similarly to Reach 5a/5b (see Reaches 5 & 6-Phase 1 Sheet L9, details 1 & 2). Vegetated blocks provide slope protection for the north and

south banks. Flood walls of approximately 4 ft above grade are required for this entire section.

Reach 4b Station 132+56 to 153+85
This reach extends from the end of the Jackson Avenue transition to the downstream end of the Capitol Expressway downstream transition. Emergent marsh vegetation will naturally colonize the earthen bottom of the sediment transport channel. A meandering base-flow channel will form within the sediment transport channel. Rock toe protection (¼ ton rock) will be added to north and south left and right banks of the sediment transport channel for structural stability and to protect the restored aquatic habitat. The rock toe protection will be covered with vegetation as described under Reach 4a. The south bank will have a 5 foot wide shaded riverine aquatic (SRA) bench that will be planted with riparian trees and shrubs for SRA cover, while the north bank will include a 20 foot wide aggregate base maintenance road 2.5 feet above the sediment transport channel bottom and a 15 foot wide access ramp to Jackson Avenue at the downstream end. Vegetated blocks provide slope protection for the north and south banks. Floodwalls are required at heights up to 4 feet at the downstream end of the channel, with a gradual height decline further upstream.

A new full-span pedestrian bridge will be constructed near Station 143+00. The proposed bridge will not affect the channel configuration or flood protection or revegetation features.

Capitol Expressway Bridge and transition – Station 153+86 to 157+60
This section spans the length of Capitol Expressway and the upstream and downstream transitions. A new box culvert will be installed under Capitol Expressway. The new culvert invert will be approximately 2 feet deeper than the proposed channel bottom invert to provide continuity with the base-flow channel. Upstream of the Capitol Expressway Bridge box culverts, the transition includes a ¼ ton rock lining strip and concrete apron, incorporating a 2 foot deep base-flow channel to protect the invert (not shown on typical section, Sheet 8). There are 15 foot wide access ramps to the downstream and upstream sides of Capitol Expressway. No flood walls are required for this entire section.

Reach 4c – Station 157+61 to 170+08
This reach extends from the end of the upstream end of the Capitol Expressway transition to the upstream end of Reach 4. Emergent marsh vegetation will naturally colonize the earthen bottom of the sediment transport channel. A meandering base-flow channel will form in the sediment transport channel bottom. Rock toe protection (1/4 ton rock) will be added to north and south banks of the sediment transport channel for structural stability and to protect the restored habitat. The south bank will have a shaded riverine aquatic (SRA) bench that will be planted with riparian trees and shrubs for SRA cover, while the north bank contains a 20 foot wide aggregate base maintenance road 2.5 feet above the sediment transport channel bottom. Vegetated blocks provide slope protection for the north and south banks. Floodwalls are required in some upstream areas at heights up to 2 feet.

Reaches 5 & 6 (Description refers to attached Phase 2 and Phase 1 Construction Plans prepared by Parsons Engineering Science)

Reach 5a/5b – Station 170+08 to 199+60 (refer to Phase 2 Construction Plan)
This reach extends from the end of the end of Reach 4 to the upstream end of Murtha Drive. Emergent marsh vegetation will naturally colonize the earthen bottom of the sediment transport channel. A meandering base-flow channel will form in the sediment transport channel bottom. The west bank has a shaded riverine aquatic (SRA) bench that will be planted with riparian trees and shrubs for SRA cover, while the east bank contains a 20 foot wide aggregate base maintenance road 2.5 feet above the sediment transport channel bottom. Rock toe protection (1/4 ton rock) will be added to both banks of the sediment transport channel for structural stability and to protect restored aquatic habitat. Bioengineered riprap will provide the toe protection (Sheet L9, details 1 & 2) and include native wetland vegetation on both banks while contributing to the SRA cover through the addition of willow stakes on the south bank (Sheet L10, detail 7). Vegetated blocks provide slope protection for the east and west banks. Floodwalls are required in most of the reach in heights up to 5 feet.

A new concrete box will be constructed to convey water from North Babb Creek into the sediment transport channel.

A new full-span pedestrian bridge will be constructed near Station 171+40. The bridge will not affect the channel configuration, flood protection or revegetation features.

A new box culvert will be installed under Story Road. The new culvert invert will be approximately 2 feet deeper than the proposed channel invert to provide continuity with the base-flow channel. Upstream of the Story Bridge box culverts, the transition includes a ¼ ton rock lining strip and concrete apron incorporating a 2 feet deep base-flow to protect the invert. There are 15 foot wide access ramps to the downstream and upstream sides of Capitol Expressway. The existing culvert extending approximately 150 downstream of Story Road will be removed and the hybrid vegetated block wall with earthern sediment transport channel described under Reach 5a/5b will be continued to Story Road.

Reach 5c/6a – Station 199+61 to 217+54 (Refer to Phase 1 Construction Plan)
This reach extends from Murtha Avenue to the upstream end of Moss Point Drive. Emergent marsh vegetation will naturally colonize the earthen bottom of the sediment transport channel. A meandering base-flow channel will form in the sediment transport channel bottom. Rock toe protection (1/4 ton rock) will be added to east and west banks of the sediment transport channel for structural stability and to protect restored habitat, as described under Reach 5a/5b. The west bank will have a 5 foot shaded riverine aquatic (SRA) bench that will be planted with riparian trees and shrubs for SRA cover, while the east bank will contains a 20 foot wide aggregate base maintenance road 2.5 feet above the sediment transport channel bottom. Vegetated blocks will provide slope protection on both banks. Floodwalls are required in some areas at heights up to 1.5 feet.

A new concrete box will be constructed to convey water from South Babb Creek into the sediment transport channel.

Reach 6b - Station 217+55 to 244+36 (Refer to Phase 1 Construction Plan)
This reach extends from Moss Point Drive to the downstream end of Cunningham Avenue. Emergent marsh vegetation will naturally colonize the earthen bottom of the sediment transport channel. A meandering base-flow channel will form in the sediment transport channel bottom. Rock toe protection (1/4 ton rock) will be added to east and west banks of the sediment transport channel for structural stability and to protect restored habitat, as described under Reach 5a/5b. Riparian trees and shrubs will be planted on the west bank to create a 2:1 slope riparian habitat area throughout this subreach, while vegetated blocks will protect the east bank. Quarter ton rock will protect the base of the riparian habitat slope from erosion. The east bank will include a 20 foot wide aggregate base maintenance road 2.5 feet above the sediment transport channel bottom. Floodwalls are required in most areas at heights up to 3.5 feet.

Conditions

1. The time limit for completing the work subject to this agreement shall be confined to the period of April 30 to October 15 of any year, except as otherwise stipulated in this Agreement. Any exception of this time restriction shall be handled on an individual site-specific basis.

2. Final construction plans shall be submitted to the Department prior to construction. The Operator shall notify the Department of any modifications make to the project description as stated above. At the discretion of the Department, project modifications may require an amendment or a new application.

3. Disturbance or removal of vegetation shall not exceed the minimum necessary to complete operations. Precautions shall be taken to avoid other damage to vegetation by people or equipment. The disturbed portions of any stream channel within the high water mark of the stream or lake shall be restored to as near their original condition as possible.

4. Revegetation and replacement plantings shall consist of locally obtained, native species, from the Lower Silver Creek or Coyote Creek watersheds.

5. Revegetation will be implemented as described in Section 6 of the Lower Silver Creek Watershed Mitigation and Monitoring Program (December 2001). Planting densities shall be and average of 12-foot centers for trees, 6-foot centers for shrubs, and willow cuttings or willow wattle bundles shall be placed on 6-foot centers. Monitoring shall be conducted for ten (10) years, in years 1, 2, 3, 5, 7 and 10 as described in Section 7 of the Mitigation and Monitoring Program. The following success criteria shall apply:

    a. At the end of three (3) years there shall be 80% or greater survival of all planted material. If at the end of three (3) years there is less than 80% survival, all dead plants shall be replaced and a contingency plan correcting maintenance problems shall be submitted to the Department.
    b. After the first 3 years success criteria shall as described in section 4 of the Mitigation and Monitoring Program (December 2001) which reads as follows:

- By year 5, all self-sustaining planted stock (trees and shrubs) must have either 70 percent survival or the revegetation sites must have an absolute woody vegetation canopy cover of 30 percent or greater within a specific sub-reach planting site.
- At year 10, the average absolute woody vegetation canopy cover of trees and shrubs must show a steady trend towards 70 percent or greater, and no less than 50 percent absolute woody vegetation canopy cover of trees and shrubs species is to occur at any revegetation site.

6. An annual monitoring report shall be submitted to the Department for the duration of mitigation monitoring no later than April 1 of the following year after fall monitoring.

7. Rock, riprap, or other erosion protection shall be placed in areas where vegetation cannot reasonably be expected to become reestablished.

8. Installation of bridges, culverts, or other structures shall be such that water flow is not impaired and upstream or downstream passage of fish is assured at all times. Bottoms of temporary culverts shall be placed at or below stream channel grade.

9. In ephemeral streams, it is anticipated that all construction shall be done while the work site is dry and that vehicles shall not be driven or equipment operated in water covered portions of the stream, or where wetland vegetation, riparian vegetation or aquatic organisms may be destroyed, except as otherwise provided for in the Agreement and as necessary to complete authorized work. Excavated material shall be placed outside the stream's ordinary high water mark on dry portions within the stream's ordinary high water mark when the material is placed on filter fabric.

10. When work in a flowing stream is unavoidable, the entire streamflow shall be diverted around the work area by a barrier, temporary culvert, and/or a new channel capable of permitting upstream and downstream fish movement. Construction of the barrier and/or the new channel shall normally begin in the downstream area and continue in an upstream direction, and the flow shall be diverted only when construction of the diversion is completed. The water diversion plan shall allow stream flows to gravity flow around or through the work site using temporary culverts or stream flow is pumped around the work site using pumps and screened hoses. Coffer dam construction shall be adequate to prevent seepage into or from the work area. Coffer dams and/or in-channel berms shall be constructed of river run gravel with a fines content that is less than 15%. Fines are defined as material that is able to pass through a #20 sieve. Coffer dams shall be installed both upstream and downstream not more than 50 feet from the extent of the work area. The entire work area shall be dewatered. The enclosure and the supportive material shall be removed when the work is completed and the removal shall normally proceed from downstream in an upstream direction. Normal flows shall be restored to the affected stream immediately upon completion of work at that location.

11. During dewatering operations, the operator shall check for stranded fish and all reasonable efforts shall be made to capture and move all stranded fish observed in the dewatered area by a qualified biologist holding a valid Scientific Collecting Permit.

Captured fish shall be released immediately upstream of the work site in the wetted channel.

12. No other diversion method shall be used without authorization of the Department. If another diversion method is preferred, the Operator shall submit a plan detailing the desired diversion method. Authorization of any other diversion method shall be at the discretion of the Department.

13. When any dam (any artificial obstruction) is being constructed, maintained, or placed in operation, sufficient water shall at all times be allowed to pass downstream to maintain fishlife below the dam pursuant to Fish and Game Code Section 5937.

14. Erosion control measures shall be utilized throughout all phases of operation where sediment runoff from exposed slopes threatens to enter waters of the State. At no time shall silt laden runoff be allowed to enter the stream or be placed where it may enter the stream.

15. Staging and storage areas for equipment, materials, fuels, lubricants, and solvents, shall be located outside of the stream channel and banks. Stationary equipment such as motors, pumps, generators, compressors, and welders, located within or adjacent to the streams shall be positioned over drip pans. Any equipment or vehicles driven and/or operated within or adjacent to the stream shall be checked and maintained daily, to prevent leaks of materials that if introduced to water could be deleterious to aquatic life. Vehicles shall be moved away from the stream prior to refueling and lubrication.

16. No equipment will be operated in live stream channels.

17. Wash water containing mud or silt from aggregate washing or other operations shall not be allowed to enter a lake or flowing stream.

18. Silty/turbid water from the excavation and/or project activities shall not be discharged into the stream, lake, or into storm drains. Such water shall be pumped into holding facility or into a settling pond located in flat stable areas outside of the stream channel, or sprayed over a large area outside the stream channel or lake to allow for natural filtration of sediments. At no time shall turbid water from the settling ponds be allowed to enter back into the stream channel until water is clear of silt. Stream turbidity adjacent to and immediately downstream of the project site shall not exceed 50 NTU's above background levels.

19. Preparation shall be made so that runoff from steep, erodable surfaces will be diverted into stable areas with little erosion potential. Frequent water checks shall be placed on dirt roads, cat tracks, or other work trails to control erosion.

20. Poured concrete shall be excluded from the wetted channel for a period of two (2) weeks after it is poured. During that time the poured concrete shall be kept moist, and runoff from the wet sacked concrete shall not be allowed to enter a live stream. Commercial

sealants (e.g. Deep Seal, Elasto-Deck BT Reservoir Grade) may be applied to the poured concrete surfaced where difficulty in excluding water flow for a long period may occur. If sealant is used, water shall be excluded from the site until the sealant is dry.

21. If a stream channel has been altered during the operations, its low flow channel shall be returned as nearly as possible to its natural state without creating a possible future bank erosion problem, or a flat wide channel or sluice-like area. The gradient of the streambed shall be as nearly as possible the same gradient as existed prior to disturbance.

22. Structures and associated materials not designed to withstand high seasonal flows shall be removed to areas above the high water mark below such flows occur.

23. Not more than two weeks prior to project construction, a survey shall be conducted by a qualified biologist for nesting raptors. If raptors are nesting, there shall be no impacts to habitat within 300 feet of the raptor nests trees during the nesting season. The survey results shall be reported in writing to the Department Regional Office.

24. Not more than two weeks prior to project construction, a survey shall be conducted by a qualified biologist for nesting migratory birds. If migratory birds are nesting, there shall be no impacts to those areas until nesting activity is completed and birds are no longer present. The survey results shall be reported in writing to the Department Regional Office.

25. The project site has been identified as an area that is potentially inhabited by a threatened species, California red-legged frog and steelhead. The operator is required to comply with all applicable state and federal laws, including the California and Federal Endangered Species Acts. This agreement does not authorize the take of any state or federally listed species.

26. By May 1 of each year after the project commences, the operator shall submit to the Department a status report describing progress made during the previous construction season, dates of the construction season, any problems encountered during the work, and the status on revegetation of disturbed sites.

27. The operator will notify the Department of Fish and Game of the date of commencement of operations and the date of completion of operations at least five days prior to such operations.

If the Operator needs more time to complete the authorized activity, the work period may be extended on a day-to-day basis by Margaret Roper at (408)843-8917, or alternatively, to the Yountville office at 707-944-5520.

A copy of this agreement must be provided to the contractor and all subcontractors who work

within the stream zone and must be in their possession at the work site.

Building materials and/or construction equipment shall not be stockpiled or stored where they could be washed into the water or where they will cover aquatic or riparian vegetation.

Debris, soil, silt, bark, rubbish, creosote-treated wood, raw cement/concrete or washings thereof, asphalt, paint or other coating material, oil or other petroleum products, or any other substances which could be hazardous to aquatic life, resulting from project related activities, shall be prevented from contaminating the soil and/or entering the waters of the state. Any of these materials, placed within or where they may enter a stream or lake, by Operator or any party working under contract, or with the permission of the Operator, shall be removed immediately.

The contractor shall not dump any litter or construction debris within the riparian/stream zone. All such debris and waste shall be picked up daily and properly disposed of at an appropriate site.

The Operator is liable for compliance with the terms of this Agreement, including violations committed by the contractors and/or subcontractors. The Department reserves the right to suspend construction activity described in this Agreement if the Department determines any of the following has occurred:

A). Failure to comply with any of the conditions of this Agreement

B). Information provided in support of the Agreement is determined by the Department to be inaccurate.

C). Information becomes available to the Department that was not known when preparing the original conditions of this Agreement (including, but not limited to, the occurrence of State or federally listed species in the area or risk to resources not previously observed)

D).The project as described in the Agreement has changed or conditions affecting fish and wildlife resources change.

Any violation of the terms of this Agreement may result in the project being stopped, a citation being issued, or charges being filed with the District Attorney. Contractors and subcontractors may also be liable for violating the conditions of this agreement.

Department personnel or its agents may inspect the work site at any time.

Amendments and Renewals

The Operator shall notify the Department before any modifications are made in the project plans submitted to the Department. Project modifications may require an amendment or a new notification.

This Agreement is transferable to subsequent owners of the project property by requesting an amendment.

To renew the Agreement beyond the expiration date, a written request for a renewal must be submitted to the Department (1600 Program, Post Office Box 47, Yountville, California 94599) for consideration at least 30 days before the Agreement expiration date. A renewal requires a

fee. The Fee Schedule can be obtained at www.dfg.ca.gov/1600 or by phone at (707) 944-5520. Renewals of the original Agreement are issued at the discretion of the Department.

To modify the project, a written request for an amendment must be submitted to the Department (1600 Program, Post Office Box 47, Yountville, California 94599). The fee for an amendment is one-half (½) of the original fee. Amendments to the original Agreement are issued at the discretion of the Department.

Please note that you may not proceed with construction until your proposed project has undergone CEQA review and the Department signs the Agreement.

I, the undersigned, state that the above is the final description of the project I am submitting to the Department for CEQA review, leading to an Agreement, and agree to implement the conditions above required by the Department as part of that project. I will not proceed with this project until the Department signs the Agreement. I also understand that the CEQA review may result in the addition of measures to the project to avoid, minimize, or compensate for significant environmental impacts:

Operator's name (print): Stanley M. Williams

Operator's signature: Stanley M. Williams

Signed the 28th **day of** May**, 2002**

CK# 700299
$1390.50
SANTA CLARA VALLEY WATER DISTRICT

R3-2001-0132
REC'D. 2/23/01

JARPA

SAN FRANCISCO BAY AREA
JOINT AQUATIC RESOURCE PERMIT APPLICATION

NORES
FOX
GINGRAS

PLEASE TYPE OR PRINT IN BLUE OR BLACK INK

Agency Information	Contact Name	Phone #	Application #(if known)
☐ **I have applied to my local agency (i.e. City or County Planning Department), and special local district (i.e. flood control) if applicable, for CEQA compliance to meet local permitting requirements. Based on the instructions, I am sending copies of this application to the following federal, state, and regional agencies**			
☐ San Francisco Bay Conservation and Development Commission (BCDC) for			
☐ A "Notice of Intent to Proceed:" with routine maintenance under BCDC regionwide or abbreviated regionwide permit #_____			
☐ An administrative permit application for minor repair or improvement			
☐ A federal consistency determination or certification (federal agencies only)			
☐ A major permit application for a new project	Lee Miles	(510) 622-2429	
☐ An application for a material amendment to BCDC permit#_____			
☒ San Francisco Bay Regional Water Quality Control Board for Section 401 or Waste Discharge Requirements			
☒ California Department of Fish and Game for 1601 X 1603_____	TBD		
☐ Timber Harvest Plan # _____			
☐ Gravel Extraction # _____			
☐ Water App # _____			
☐ California State Lands Commission*			
☐ California Coastal Commission	Marc D'Avignon	(415) 977-8446	
☐ US Army Corps of Engineers for Section 404 or Section 10 Individual or Nationwide Permits			
☐ US EPA for 404 Individual Permits*			
☐ US Fish and Wildlife Service for 404 Individual Permits*			
☐ National Marine Fisheries Service			
☐ US Coast Guard for Section 9 Bridge Permit			
☐ Federal Funding Agency			

* *See Instructions*

AGENCY CONTACT INFORMATION ON PAGE 13

This form may be duplicated as needed.

SECTION ONE – TO BE COMPLETED BY ALL APPLICANTS

Attach additional sheets, if needed

Box 1 Applicant Name Santa Clara Valley Water District: George Fowler			
Mailing Address 5750 Almaden Expressway, San Jose, CA 95118			
Work Phone (408) 265-2607 x-2748	Home Phone N/A	Fax # (408) 264-0213	E-mail Address GeorgeF@scvwd.dst.ca.us
Relationship of applicant to property: ☒ Owner ☐ Purchaser ☐ Lessee ☐ Other _____			
Application is hereby made for a permit or permits to authorize the activities described herein. I certify that I am familiar with the information contained in this application, and that to the best of my knowledge and belief, such information is true, complete, and accurate. I further certify that I possess the authority to undertake the proposed activities. I hereby grant to the agencies to which this application is made, the right to enter the above-described location to inspect the proposed, in-progress or completed work. I agree to start work only after all necessary permits have been received.			
Signature of applicant			Date 2/22/01

Box 2 Authorized Agent Name and Signature *(If an agent is acting for the applicant during the permit process)* René Langis			
Mailing Address 2471 Autumnvale Drive, Suite G, San Jose, CA 95131			
Work Phone 408.586.0110	Home Phone N/A	Fax # 408.586.0101	E-mail Address rlangis@scvwd.dst.ca.us
I hereby designate the above named authorized agent to act as my agent in matters related to this application for permit(s). I understand that I am bound by the actions of my agent and I understand that if a federal or state permit is issued, I, or my agent, must sign the permit.			
Signature of applicant			Date 2/22/01
I certify that I am familiar with the information contained in this application, and that to the best of my knowledge and belief, such information is true, complete, and accurate.			
Signature of authorized agent			Date 2-21-01

Box 3 Name of property owner(s), if other than applicant. N/A	
Mailing Address	
Work Phone	Home Phone
I understand I am bound by actions of authorized agent and/or the applicant.	
Signature of property owner (except public entity landowners) N.A.	Date —

This page must be signed by the applicant, property owner and agent to be considered complete.

Box 4 Location, including street address, city, county, zip code where proposed activity will occur

Lower Silver Creek from confluence with Coyote Creek to confluence with Lake Cunningham, San Jose (eastern portion), Santa Clara

Waterbody (if known): Lower Silver Creek

Tributary of: Coyote Creek

Latitude & longitude if known: N/A	Zoning Designation: N/A
Assessors parcel number: N/A	Section, Township, Range, USGS Quadrangle Map: T.7.S (Small part in T.6.S); R.I.E.

Box 5 Existing site conditions: Describe the existing condition of the site, including wetlands, channels, streams, ponds, seeps and ditches, and other jurisdictional features. Include information on elevations, vegetation, property use, and structures. Use additional pages if necessary. If any portion of the proposed activity has already been initiated or completed on this property, indicate type of activity and month and year of completion, if applicable: January Month/ 1992 Year Flood control improvements* –

See Section 2 of the enclosed Initial Study/Environmental Assessment as well as Subsection 4.4 of Section 4.

* Work completed in January 1992 consisted in the installation of approx. 70 feet of rectangular concrete channel immediately down stream of the culvert under the King and McKee Roads intersection on Reach 2.

Box 6 Proposed starting date: April 2002 Estimated duration of activity: 3 years

Will the project be constructed in stages? ☒ Yes ☐ No

Box 7 Description of the proposed project: Use as many pages as necessary to describe the project as completely as possible. Describe the area within the project site that will be used each for development features and open space. Include construction plans pertaining to the project. For additional guidance on what to include, refer to the instructions

See Subsection 1.3-1.5 of the enclosed Initial Study/Environmental Assessment for a description of the project.

See Lower Silver Creek Watershed Project Section 404(B)1 Alternatives Analysis and Plan Update (Enclosed) that includes a USGS map, photos, and reach cross sections. We are also enclosing drawings and site photographs.

Attach figures, maps, and directions to the project site. See instructions for completing the drawings. One set of original or good quality reproducible drawings must be attached to each agency. Applicants are encouraged to submit photographs of the project site, but these do not substitute for drawings. BCDC, the Corps Of Engineers and Coast Guard require at least one set of drawings on 8-1/2 x 11 inch sheets. Larger drawings may also be required. Fish and Game requires a USGS map. For a complete list of required drawings, refer to the instructions.

Reason(s) for the proposed work: **BOX 7 (CONTINUED)**

To reduce potential flood damages associated with flooding along the Lower Silver Creek stream corridor.

Box 8 Placement of Structures And/Or Fill Material

- Will fill be placed below the ordinary high water line for fresh waters? ☒ Yes ☐ No
- Will rock, fill, bulkhead, pilings, structures or other material be placed waterward of the mean high water line for tidal waters? ☐ Yes ☒ No
- Will fill be placed below the high tideline in tidal waters? ☐ Yes ☒ No

If applicable, number of linear feet of impact 22,650 LF
Amount of **total** fill - 110,000 cubic yards 1,133,500 square feet 26 acreage
Amount of fill **below the ordinary high water mark or high tide line** 60,000 cubic yards 8.8 acreage
Type of fill Earth, rock, concrete, concrete pavers, blocks and riprap Material source

Box 9 Impacts on Wetlands

- Will the proposed project have temporary or permanent impacts to wetlands, including seasonal wetlands, managed wetlands or on tide or submerged lands (i.e. fill, flooding, draining)? ☒ Yes ☐ No If yes, please describe the wetlands, using additional pages as necessary. Provide one or more photographs of the existing conditions.

See attached wetlands delineation report, IS/EA sub section 4.4.C and 404(B)(1) Alternatives Analysis and provided photographs.
Approximately 4.7 acres of wetlands will be temporarily affected.

- If a wetlands delineation has been completed, please submit it with application - attached ☒ Yes ☐ No
- If a geology or soils report has been prepared, please submit with application – attached ☐ Yes ☒ No

Box 10 Waterway Impacts

Will the project or activity involve work in the bed, bank or channel of a river, stream (including seasonal streams), or lake? ☒ Yes ☐ No If yes, describe existing and proposed conditions. Number of linear feet along the waterway that are involved -- 22,650 ft. See Boxes 7-9

Box 11 Potential for Impacts to Threatened and Endangered Species

List any state and/or federally listed species and/or associated habitat that occurs or may occur on the project site. If a federal or state listed species is being impacted, please provide a description and a biological assessment - attached ☐ Yes ☒ No Have surveys, using US Fish and Wildlife Service protocols, for possible listed species been conducted? ☒ Yes, ~~attached~~ but not attached ☐ No

See enclosed letters from USWFS and NMFS regarding compliance with the FESA.

Box 12 Excavation And/Or Dredging

For Projects OUTSIDE of the San Francisco Bay, San Pablo and Suisun Bay. [Dredging Projects in San Francisco Bay, San Pablo Bay, and Suisun Bay, should be completed through the Dredged Material Management Office (DMMO)].

Will excavation or dredging be required in water or wetlands? ☒ Yes ☐ NoIf dredging or excavation:

- Volume: 128,000 (cubic yards)/area 8.8 acres (acres)/ 22,650 (linear feet of channel)
- Composition of material to be removed: Earth, concrete
- Disposal location for excavated material: To be determined
- Method of dredging: Excavators, Dozers, Backhoes
- Purpose of the dredging: Flood protection channel improvements
- Estimated future maintenance dredging required annually: 10,000 cubic yards
- Additional information to be provided in an attachment

Box 13 Mitigation

Identify proposed actions to avoid, minimize, and mitigate detrimental impacts, and provide proper protection of aquatic life. Describe the size, type, location and functions of the mitigation and a time line for implementation. Define buffer areas as appropriate. Include the monitoring component, if applicable.

If an Alternatives Analysis has been prepared , please attach it- attached ☒ Yes ☐ No

Mitigation Plan to be submitted at a later date; See also Alternatives Analysis; See also IS/EA

Box 14 Environmental Impact Documentation

National Environmental Protection Act (NEPA) or California Environmental Quality Act (CEQA) compliance document provided: ☒ Yes ☐ No

Is documentation being prepared? ☐ Yes ☒ No

The following is attached: ☐ EIS ☐ EIR ☒ Negative Declaration ☐ Mitigated Negative Declaration ☐ Categorical Exemption ☐ Statutory Exemption ☐ Notice of Exemption ☐ Notice of Determination

Box 15 Has any agency denied approval for the activity described herein or for any activity directly related to the activity described herein? ☐ Yes ☒ No If yes, explain:

Box 16 Names, addresses and telephone numbers of adjoining property owners, lessees, etc.
(Local governments may require additional notice – consult your local government.)

Name	Address	Phone number
See attached.		

End of Section One

Section Two – Agency Specific Requirements for Project Permitting

Box 17 Department of Fish and Game - Projects Adjacent to, or Involving a River, Stream, or Lake

❑ **This project does not involve this agency (no additional questions completed)**

Project Name Lower Silver Creek Project cost $ 38,300,000 Proposed start date June 2001
Proposed completion date 2004 Number of Stream Encroachments N/A

Project ❑ Operator❑ Contractor, ❑ Contact, if different from applicant, agent, and property owner on page 2 Name, address, phone and fax for each

Attach copies of completed applicable local, state, or federal permits, agreements or authorizations:
- ❑ Local (describe):
- ❑ State (describe):
- ❑ Federal (describe):

	Project Questionnaire:	Yes	Maybe/ Uncertain	No	Please explain if you responded "yes" or "maybe/uncertain"
1.	Will the project or activity involve work on the bank of a river, stream, or lake?	X			Flood control protection improvements to 4.64 mi. of flood control channel
2.	If you answered "yes" to #1, will the project or activity involve any of the following:				
	a. Removal of any vegetation?	X			Wetland, ruderal grasses, upland ornamental shrubs/trees
	b. Excavation of the bank?	X			To widen channel
	c. Placement of piers?	X			To replace bridge structures (i.e. Alum Rock, Jackson, Sunset, and Capitol EXPY
	d. Placement of bank protection or stabilization structures or materials (e.g., gabions, rip-rap, concrete slurry/sacks)?	X			Hybrid blocks, concrete walls, blocks/pavers
3.	Will the project or activity take place in, adjacent to, or near a river that has been designated as "wild and scenic" under state or federal law?			X	
4.	Will the project or activity involve work in the bed or channel of a river, stream, or lake?	X			Excavation to widen existing flood control channel and to place materials
5.	Will the project or activity involve the placement of any permanent or temporary structure in a river, stream, or lake?	X			Placement of earth fill, concrete, rock and blocks, resting pools, drop structures
6.	Will the project involve the use of material from a streambed?		X		Streambed material may be used for coffer dams
7.	Will the project or activity result in the disposal or deposition of debris, waste, or other material in a river, stream, or lake?			X	Other material – See #5 No intentional disposal of debris or waste
	a. If you answered "yes" to #7, describe the material that will be disposed of or deposited in the river stream, or, lake:	Rock, concrete, earth fill, concrete pavers, blocks			
8.	Will any type of equipment be used in a river, stream, or lake?	X			Heavy construction equipment (temporarily)
	a. If you answered "yes" to #8, describe the type of equipment that will be used:	Excavators, backhoes, dozers, pumps, dump trucks (during construction)			
9.	Does the project or activity area flood or periodically become inundated with water?	X			The area is a flood control channel that contains low flows all year-long, as well as conveying storm flows

10.	Will water need to be diverted from a river, stream, or lake for the project or activity?	X			See #10 below.
11.	If you answered "yes" to #10, please answer the following:				
	a. Will this be a temporary diversion?	X			Upon completion of work in any one reach, normal flows will be reestablished.

10. Low summer flows will be bypassed as necessary around work sites.
No diversion during fish migration or passage of flood flows.

BOX 17 (CONTINUED)

	b. Will water quality be affected by the deposition of silt, an increase in water temperature, a change in the pH level, or in some other way?	X			Temporarily, especially when putting in or removing temporary cofferdams – See IS/EA and BMP list
	c. Will the water be diverted by means of a dam, reservoir, or other water impoundment structure?	X			temporary cofferdams and piping
12.	Will the project or activity be done pursuant to a water right application or permit?			X	
13.	Has a wildlife assessment or study been completed for the area where or near where the project or activity will take place? (If "yes", attach or enclose a copy of the assessment or study.)	X			See IS/EA
14.	Will the project or activity affect fish, amphibians, insects, or other aquatic resources?	X			Native fish will be relocated as reaches are scheduled to be reconstructed
15.	Will the project or activity affect terrestrial wildlife?	X			Temporary disruption of movement through affected reach
16.	Are any endangered or rare plant species thought or known to occur in the area where the proposed project or activity will take place?			X	
17.	Are any endangered or threatened fish, bird, or animal species thought or known to occur in the area where the proposed project or activity will take place?			X	
18.	Have you contacted any other local, State, or federal agency regarding the project or activity?	X			
	a. If you answered "yes" to #18, please list the names of the agencies you have contacted:	See attached letters from USFWS and NMFS			
19.	Have you applied for or obtained any permit, agreement, or other authorization for your project or activity from any government agency?	X			
	If you answered "yes" to #19, please list the names or describe the permit, agreement, or authorization you have applied for or obtained:	Applied for U.S. Army Corps of Engineers permit			
20.	Have any environmental documents pertaining to your project or activity been prepared?	X			
	a. If you answered "yes" to #20, please list the environmental documents that have been prepared:	1983 EIR/EIS – Lower Silver Creek Watershed 2000 IS/EA – 1983 Recommended Plan, as modified by the 1998 Plan Update			

I hereby certify that all information contained in this notification is true and correct and that I am authorized to sign this document. I understand that in the event this information is found to be untrue or incorrect, I may be subject to civil or criminal prosecution and the Department may consider this notification to be incomplete and/or cancel any Lake or Streambed Alteration Agreement issued pursuant to this notification. I understand that this notification is valid only for the project described herein and that I may be subject to civil or criminal prosecution for undertaking a project that differs from the one described herein, unless I have notified the Department of that project in accordance with section 1601 or 1603 of the Fish and Game Code.

I understand that a Department representative may need to inspect the property where the project described herein will take place before issuing a Lake or Streambed Alteration Agreement pursuant to this notification. In the event the Department determines that a site inspection is necessary, I hereby authorize the Department to enter the property where the project described herein will take place to inspect the property at any reasonable time and certify that I am authorized to grant the Department permission to access the property.

☒ *I request the Department to first contact me at (insert telephone number)* (408) 586-0110 *to schedule a date and time to enter the property where the project described herein will take place and understand that this may delay the Department's evaluation of the project described herein.*

Operator or Operator's Representative: _____ _____

APPENDIX 3D-4

CITY OF SAN JOSE ENCROACHMENT

CITY OF SAN JOSE
CAPITAL OF SILICON VALLEY

REVOCABLE ENCROACHMENT PERMIT
(Utilities Section)

DEPARTMENT OF PUBLIC WORKS
ENGINEERING SERVICES DIVISION

1661 Senter Road, Building A, San Jose CA 95112
(408) 975-7455 FAX (408) 971-4882

Permit No. 3-09006RU
Date July 20, 2009
Inspector Steven Blake
Charge #: 545-13345

PERMITTEE:

Santa Clara Valley Water District
5750 Almaden Expressway
San José, CA 95118

CONTRACTOR:

TBD

CONTACT: Dennis Cheong (408) 265-2607 ext 2618
24-HOUR: Dennis Cheong (408) 265-2607 ext 2618

CITY BUSINESS LIC. NO.: TBD
CONTRACTORS LIC. NO.: TBD

LOCATION OF PROPOSED WORK	REASON FOR ENCROACHMENT
Lower Silver Creek, Reach 6b. SCVWD creek immediately north of Lake Cunningham Park. Creek work extends from Cunningham Avenue to Moss Point Drive, east of, and parallel to, Capitol Expressway.	**Traffic Control only. City facilities will not be affected.**

Pursuant to Title 13, Chapter 13.36, Section 13.36.020 of the San José Municipal Code, permission is granted by the City to encroach in City right-of-way as described above. All work and materials shall be in accordance with approved plans, the current City of San José Standard Specifications for Public Works Construction, Standard Plan Details, attached Standard Conditions, and Special Conditions as appropriate. All work in City right-of-way is subject to inspection and approval by the

(MORE CONDITIONS ON FOLLOWING PAGES)

CONDITIONS ACCEPTED BY:

Name of Responsible Party (Print or type)	Signature	Date
KATHERINE OVEN, Deputy Operating Officer	Katherine Oven	7/29/09

PUBLIC WORKS - PERMIT APPROVAL:

Name (Print or type)	Signature SK	Date
KATY ALLEN, Director Of Public Works		7/20/09

For Internal Use Only (Circle requirements as appropriate)

Fees Paid	Comp.Deposit	Insurance Cert.	Traffic Plan	Site Sketch	Project Acceptance
Check No. N/A	Check No. N/A	OK w/ Risk Manager?	Approved?	Submitted?	Inspector
Amount NO FEE	Amount $	Yes No N/A	Yes No	Yes No	Date

City Engineer. City-approved Traffic Control Plans and/or City-modified details/specifications as attached are considered to be included herein.

This **INTER AGENCY REVOCABLE ENCROACHMENT PERMIT** is issued in accordance with the fee schedule adopted by the City Council on June 14, 2005, Resolution No. 72737, which designates a "Cost plus" fee for recovery of the City's expense for plan review and inspection. The City may waive these fees at its sole discretion when in the interest of the City. The Permittee will be invoiced monthly for time and material cost accrued by City Staff to perform all activities necessitated by the project.

SPECIAL CONDITIONS:

1. **Additional Traffic Control Plan as needed shall be submitted to the City at least 5 working days prior to start of construction.**

2. **Coordinate traffic signal shutdown with City of San José Inspector at (408) 975-7455.**

3. **Permittee or its contractor shall obtain a haul route permit from CSJ Department of Transportation prior to hauling any material onto City of San Jose right-of-way.**

STANDARD CONDITIONS:

Working Hours :

8:30 AM to 3:30 PM - Monday through Friday, excluding holiday weekends, for all work.
9:00 AM to 3:00 PM - When working within or near a signalized intersection, traffic shall be controlled by reserve police officers. Officers shall be scheduled through SJPD Secondary Employment Unit, five working days in advance. Call (408)277-4980.

1. This permit is valid for one year from date of issuance. Extensions may be granted upon approval by the City. This permit may be terminated, revoked or amended upon ten days written notice by the Director of Public Works with or without cause, and may be revoked immediately for noncompliance or harm or threat of harm to life or property. Permittee shall remove and/or relocate its facilities in to order accommodate the use of the right-of-way by the city, or to accommodate future improvements in, along, across, through, over or upon the right-of-way by the city in the time and manner specified by the City in the notice of termination. Upon expiration, termination, amendment, or revocation, the site shall be restored to pre-construction conditions or better per current City standards. This permit or a copy thereof shall be kept at the work site and must be shown to any representative of the City or law enforcement officer on demand.

2. Notify Underground Service Alert (USA) at **1-800-227-2600** two (2) working days prior to beginning any excavation. Provide "USA" with the City permit number. This permit is only valid when the permittee, its agent or contractor obtains an identification number from "USA" (Government Code Section 4210.1). No excavation may commence before such identification number is obtained. Field marking shall conform with standard color codes and symbols of "USA" specifications. All USA pavement markings shall be removed by permittee prior to completion of project. Sand-blasting is not allowed on City streets or sidewalks.

3. **Twenty-four (24) hours in advance of starting, resuming, or changing scheduled work within the City right-of-way, the permittee shall notify: (WORK INSTALLED WITHOUT NOTIFICATION MAY BE REJECTED)**

a) **City of San Jose – Engineering Services Division - Inspection**	**Phone (408) 975-7455**
b) Santa Clara County Transit, if bus-stops will be blocked.	**Phone (408) 321-7000**
c) City of San José Communications for any detours and closures.	
Routine closures (previously authorized by the City)	**Fax (408) 277-2289**
Emergency or urgent closures	**Phone (408) 277-8900**

4. This permit is NOT valid until a traffic control plan has been reviewed by the City. The traffic control plan SHALL BE SUBMITTED AT LEAST 3 DAYS PRIOR to construction (Attn: Steven Blake, Fax No: 408-971-4882).

5. Permittee shall contact the City of San José Planning Department at 408/535-3555 for verification of archaeologically sensitive areas within their scope of work area. In the event that Human Remains and/or Cultural Materials are found, all project-related construction should cease within a 100-foot radius. The contractor shall, pursuant to section 7050.5 of the Health and Safety Code, and section of the Public Resources Code of the State of California, notify the Santa Clara County Coroner immediately.

6. Three days before the start of construction, the permittee and the contractor(s) shall attend a pre-construction meeting with City staff, the contractor shall be prepared to present the proposed construction schedule, the names of suppliers for PCC and AC, the number of crews committed to the project and the name and phone number of a local contact in case of an emergency if other than above.

7. The City of San José reserves the right to conduct daily inspections throughout the phases of the project and to access any pertinent permittee records. City inspection of facilities which will require future City maintenance is required. Permittee shall make available to the City any test results affecting City facilities. This inspection shall be conducted by permittee and the City of San José. Permittee shall notify City staff when work is completed and shall allow sufficient time for the City to submit to permittee a list of items, if any, that need corrective action. Final acceptance of permit will not take place until all items have been addressed and corrected.

TRAFFIC CONTROL

This permit is not valid until a complete traffic control plan has been received by the City. The traffic control plan shall be submitted to the City at least 3 days prior to the start of construction. All traffic controls shall conform to Section 12 of the City of San José Standard Specifications, the Special Conditions of this Permit, the latest CALTRANS "Manual of Traffic Controls for Construction and Maintenance Work Zones", and California Joint Utility Traffic Control Committee's "Work Area Protection and Traffic Control Manual". All work shall be planned and carried out to cause the least possible inconvenience to the public.

Scheduling of SJPD Secondary Employment Unit officers (two officers minimum) is required for work within and/or adjacent to signalized intersections:

- The Secondary Employer (permittee) shall maintain records of each officers hours of work and make those records available for review during business hours upon the request by the Secondary Employment Unit.
- The Secondary Employer shall allow inspection of the job site or work premises during business hours for the purpose of ensuring that the premises and the business are in compliance with the terms and conditions of this permit.
- The Secondary Employer shall indemnify and hold harmless the City from any and all damages, costs, losses and liabilities arising out of the private security services performed by off-duty San José Police Officers and Reserves for the Secondary Employer.

1) If applicable, install "Tow-Away" or " No Parking, No Stopping" signs at least 24 hours in advance of starting work. The messages on the signs shall include the dates and times of the required prohibition. A permit must be obtained from the Department of Transportation at City Hall **200 E. Santa Clara St. 8th Floor,** (408) 535-3850.
2) Construction equipment shall be parked in a manner, which produces the least hindrance to the traveling public. Equipment will not be allowed to park in the City right-of-way after working hours.
3) Complete closure of a traffic lane is not indicated on the plans submitted and is not permitted; 12' minimum width lane(s) shall be maintained adjacent to the work area(s).
4) Provide an arrow board for EACH lane reduction required on any major street. NOT more than one traffic lane in the same direction shall be closed at the same time.
5) A minimum of TWO reserve police officers must be scheduled for work at the at nay signalized intersection.
6) Provide for safe passage of pedestrians within the vicinity of the work areas.
7) Maintain at least one lane, 12' minimum width, in each direction for vehicular use; or two flaggers are required whenever one lane, 14' minimum width, is utilized for two directional traffic.
8) ANY Work (including set up or removal of traffic control devices) requiring closure of a vehicular or bicycle traffic lane on White Road SHALL be scheduled to occur between 8:30 A.M. and 3:30 P.M.
9) If any work is to be scheduled at night or on weekends, submit proposed days and hours of work to the City at least 2 days prior to work.
10) Scheduling of SJPD Secondary Employment Unit officers is not necessary if proposed Traffic Control plan allow for normal flow of traffic and operation of the traffic signal. For any work which interferes with the normal flow of

traffic or operation of a traffic signal (as determined by the City Inspector), a minimum of TWO SJPD secondary employment officers must be scheduled for work at the signalized intersection.

11) The Contractor shall provide all required signs, barricades, arrowboards, lights, high level flag trees and devices, flagging or reserve police officers.
12) All traffic lane reductions shall be delineated with Type II barricades, 28" traffic cones, or 48" delineators spaced 25' O.C. The tapered transitional length shall be 150' minimum.
13) Post "KEEP RIGHT(LEFT)" signs on Type II barricades at the beginning of each lane reduction.
14) Post C20 "RIGHT(LEFT) LANE CLOSED AHEAD" sign attached to a high level flag tree 150' ± in advance of lane reductions.
15) Inform the public of the traffic conditions existing within the construction area at all times by placement of appropriate warning and advisory signs. Provide and maintain all traffic control and safety items. Permittee assumes sole and complete responsibility for the job and site conditions during the course of construction, including safety of all persons and property. This requirement shall apply continuously 24 hours/day and shall not be limited to normal work hours.

Maintain a minimum 3' wide walkway around excavations in the sidewalk area. After working hours, cover the excavated area with 1 1/8" plywood stabilized with temporary Asphalt Concrete (AC) around the edges, or backfill and install 2" of temporary AC to provide safe and comfortable passage. At no time shall pedestrians be diverted onto a portion of the street used for vehicular traffic.

Bore pit(s), potholes, trenches and other excavations within the traveled area shall be backfilled or steel plated (with a non-skid surface) to accommodate vehicular traffic use after working hours or when the excavation is left unattended. Steel plates in traffic lanes shall be countersunk flush with adjacent grade. Steel plates in other areas shall be held in place by placing temporary AC around all edges.

TRENCH EXCAVATION, BACKFILL AND SURFACE RESTORATION

All longitudinal trenches shall be located as shown on the attached plans.

To protect sanitary sewer laterals, contractor shall locate the clean-out and mark the lateral before excavating or boring.

During approved working hours, all open excavation areas shall be barricaded with at least two (2) Type III barricades at the end of the excavation that faces oncoming traffic. The longitudinal edge of pavement excavation shall be delineated with Type II barricades spaced 25' O.C. Attach "OPEN TRENCH" signs to barricades 100' O.C.

Maintain property access at all times. Where facilities exist, a minimum sidewalk and bike path width of four feet (4') shall be maintained at all times for safe passage through the work area. At no time shall pedestrians be diverted onto a portion of the street used for vehicular traffic. One (1) 18" X 30" "CROSSWALK CLOSED - USE OTHER SIDE" sign shall be posted on barricades where an existing crosswalk cannot be maintained.

All construction (including repairs to damaged City facilities) and use of materials must adhere to current City of San José Standard Details and Specifications.

The City reserves the right to approve and construct municipal improvements over and/or under portions of City right-of-way utilized by permittee. The City reserves the right to do other work on or near the project. Permittee shall cooperate with others and conduct work as to facilitate work by the City or others and prevent delay, additional expense, or hindrance thereto. Permittee shall request from, and exchange with others, drawings, data, and information as necessary to insure proper completion of the project and the work of others.

Clean and tack sides of excavation and between courses with a spray application of Type SS-1 emulsion before placing A.C. Apply Chip seal or other surface as necessary to match existing pavement. If street is paved with P.C.C. notify the City as soon as possible. Surface restoration of trench shall be by matching the thickness of P.C.C.

Should the work contemplated in this permit interfere with the established drainage, the permittee shall make ample provisions to provide for adequate drainage, or as may be directed by the City.

POTHOLES AND ALL TRENCHES OVER 6" WIDE - shall be backfilled and the surface restored in accordance with the 1992 City of San José Standard Specifications and, Method A (attached detail), and the following:

- All potholes (vacuumed or hand excavated) shall be a minimum of 2' x 2' saw cut to the full depth of AC
- Saw cut trench walls to the bottom of existing AC.

- Grind existing AC a minimum of 0.1 foot deep, at least 6" beyond each side of the trench walls, **and if trench is within 12" of lip of gutter, then grind to lip of gutter;** or
- Saw cut and replace existing AC at least 6" beyond the side of the trench walls. (see attached details)

ROCKWHEEL OR NARROW TRENCHES 6" WIDE OR LESS -
If utilized for this project, the equipment shall have a mounted water tank, an attached conveyor belt and shall be in good working condition at all times. Water supply to the rockwheel and for cleaning the street, when necessary, shall be maintained and immediately available. The beginning and end of a narrow trench shall be sawcut vertically.

The backfill material for narrow or rockwheel trenches (6" or less) shall consist of a Portland Cement Conerete (PCC) mix conforming to Section 90 of the 1992 CSJ Standard Specifications. The proposed mix design shall be submitted to the City for approval five (5) working days before use within the public right of way. Portland cement shall be Type II Modified, and the content shall not be less than 376 pounds per cubic yard. The proposed mix design shall achieve, within two (2) hours, a minimum penetration strength of 200 psi when tested in accordance with ASTM C403. During construction for field quality control the PCC mix shall reach minimum penetration strength of 400 psi as determined by a pocket penetrometer. The proposed mix design shall be able to support motorcycle and/or bicycle traffic within two hours. The mix shall also achieve 2000 psi compressive strength within twenty-eight (28) days when tested in accordance with ASTM C39. Hand vibrator(s) shall be used to consolidate the PCC backfill material. Concrete backfill shall be placed flush with the surrounding pavement. Grind the top of the trench a minimum 18" wide by 0.1 foot deep and place surface AC per City Specifications. Trench surface restoration shall be completed within five (5) days from the date of the backfill placement.

DIRECTIONAL DRILLING OR BORING - The permittee/contractor shall obtain approval from the City before the start of any directional boring operation.

If these methods are utilized, all utility crossings in the proposed bore alignment shall be potholed and exposed to verify depth prior to commencing with the boring operation. Potholes shall then remain open until the bore has passed the exposed utility to verify that no damage has occurred.

Potholing for boring operations shall be at the centerline of the proposed drilling. All potholes (vacuumed or hand excavated) shall be a minimum of 2' x 2' saw cut to the full depth of AC and excavated to a minimum depth of 12" below the last utility located. Backfill shall be per "Wide Trench Restoration Detail" using only CDF or AB CL III or better. If undermining occurs, (1) backfill pothole with CDF, or (2) saw cut and remove the material over the undermine and backfill with CDF or AB CL III or better.

The locations for directional boring equipment shall be approved in advance by the City inspector.

All new conduits shall be placed between 18" and 48" deep in sidewalk areas, and between 24" and 48" deep in street areas. Horizontal alignment of the new conduit shall be straight and no deviation of more than 6" will be accepted unless revised permit drawings have been submitted and approved by the City. Contractor shall mark the approved horizontal alignment before beginning boring operations. Contractor shall mark the progress and depth of the bore at 20' intervals by applying a paint dot to the ground in the same color scheme as used for Underground Service Alert. Deviations from the approved plans shall be corrected immediately to get the bore back to the approved alignment and depth.

Long sweeping bends shall not be used when making a 90-degree turn. Work within the end-of-returns of each street corner or within cul-de-sacs shall be coordinated with the City inspector.

Sand is permitted as a pipe shade (4"max.) only and not as a backfill material.

If a street has been recently chip sealed, the surface of the new trench or pothole shall also be chip sealed to match existing in texture and appearance. Excess chip seal material shall be removed within 24 hours after it is placed.

The permittee is obligated under this permit to maintain and repair all pavement and sidewalk sections in the City's right-of-way damaged due to the installation of the above described facilities without time limitation. Repairs shall be made according to the most recent City of San José Standard Details and Specifications. Replace all improvements such as asphalt paving, curb, gutter, sidewalk, electrical facilities, irrigation systems or landscaping damaged in the performance of the work. Replacement of damaged electrical and irrigation systems shall occur within 48 hours and be coordinated with the City Inspector.

Saw-cut through all PCC (curb, gutter, sidewalk, etc.) to be removed. Remove to the nearest mechanical joint or score marks. Remove and replace complete squares and score new sidewalks to match existing. When trenching within the sidewalk, remove and replace a strip of concrete at least 3' wide (it shall extend to the next score mark). Concrete curb, gutter, and

sidewalk shall be constructed in accordance with the most recent City of San José Standard Specifications and Details. In areas where the sidewalk has been constructed partially with granite or decorative tiles, the permittee shall place all splice boxes at grade and within the un-tiled area. **All new pull boxes placed by permittee shall be located within 4.5 feet of the face of curb and shall match the existing surface in texture and appearance.**

~~If a PCC street section is encountered, notify the City inspector immediately. When trenching is within a PCC street section,~~ the following steps must be taken:

- Saw cut neatly through the existing PCC section.
- Backfill trench in accordanee with City of San José - Method A.
- To resurface the trench, the contractor shall first dowel into the existing PCC section and than pour the new PCC in accordance with City standard specifications.
- If the existing PCC section is covered with A.C pavement, the contractor shall match the existing AC section minus 0.1 foot from the surface, grind 6" wide area on each side of the trench, 0.1 foot deep and then repave.
- Rockwheel trenching is not permitted in PCC paved streets.
- Route trenches around concrete bus pads. No excavation is permitted within a PCC bus pad.

Locations for all above ground structures (cabinets, pedestals, etc.) shall be coordinated with the City inspector.

The work site is to be maintained in a safe condition at all times. Attention is directed to Sections 7-1.08, 7-1.09 and 7-1.12 of the City of San José Standard Specifications regarding public safety, convenience and responsibility for damage.

Any new retaining walls shall be constructed with reinforced concrete unless approved by the City. Contractor shall submit details to the City for approval prior to construction.

The City of San José Municipal Code and the California State Fish and Game Code prohibit contractors from disposing dirt & other debris into public storm drain system.

Construction equipment and/or materials SHALL NOT be parked, stored, or stockpiled in public right of way; except within designated work areas during regular work hours. If a feasible storage area cannot be identified, the City will consider specific requests submitted by the permittee/contractor.

No tree within the public right-of-way may be removed or trimmed without prior written authorization from the Department of Transportation. Call (408) 535-3850.

PROTECTION OF CITY-OWNED FACILITIES

Permittee shall verify all existing locations of City of San José nonpressurized underground facilities (storm sewer, sanitary sewer, etc.). If City facilities (electrical, water, storm or sanitary sewer) are accidentally damaged, immediately notify the City Inspector and employ the appropriate licensed contractor to make repairs at no expense to the City. Temporary repairs to damaged facilities shall be made immediately. Final repairs shall be made as soon as possible, but no later than three (3) days from the date of damage. All changes affecting City liability, maintenance, or operation of City facilities must be approved by the City prior to construction.

City Survey Monuments shall be preserved. In the event that a City Monument is lost to construction activities, the Permittee shall, at the Permittee's sole expense, be responsible for its re-establishment and the filing of a Corner Record with the County's Surveyor's Office. For more information about City Survey Monuments, contact Patty Camon, (408) 998-6086.

Any existing surface facilities (valve, splice, access boxes or manholes, survey monuments, etc.) within the construction area shall be raised/relocated to the new surface. Coordinate with owner of facility.

LIABILITY

1. CITY, its agents, officers, employees or contractors, shall not be liable for any damage from any cause whatsoever to PERMITTEE's equipment, specifically including, without limitation, damage, if any, resulting from CITY's maintenance operations or other activities within the right-of-way, from the public's use of the right-of-way, or from vandalism or other unauthorized activities, except as such damage is caused by the gross negligence or willful misconduct of CITY, its agents, officers, employees or contractors.

2. PERMITTEE waives and releases CITY from any and all liability to PERMITTEE, its employees, agents, contractors or subcontractors for any loss, damage, liability, or liability for damages, whether for loss of, or damage to, property, or

injury to, or death of, persons, which may arise out of operations by PERMITTEE, its employees, agents, contractors or subcontractors under this permit, except such loss or damage as is caused by, or arises out of, the active negligence or willful misconduct of CITY, its agents, officers or employees

INDEMNIFICATION

PERMITTEE agrees to indemnify, defend, and hold harmless CITY and its officers, agents, and employees against all loss, damage, liability, and liability for damages, resulting from or arising out of PERMITTEE= s activities under this permit, including activities of PERMITTEE's employees, agents, contractors or subcontractors, except such loss or damage as is caused by or arises out of the active negligence or willful misconduct of CITY, its agents, officers or employees. All of PERMITTEE's obligations under this subsection are intended to apply to the fullest extent permitted by law and shall survive the expiration or sooner termination of this Permit.

APPENDIX 3E

CENSUS INFORMATION

Detailed Tables

Note: use download to retrieve all selected tables and geographies

P52. HOUSEHOLD INCOME IN 1999 [17] - Universe: Households
Data Set: Census 2000 Summary File 3 (SF 3) - Sample Data

geographies **1-10** of **12** Next▶

NOTE: Data based on a sample except in P3, P4, H3, and H4. For information on confidentiality protection, sampling error, nonsampling error, definitions, and count corrections see http://factfinder.census.gov/home/en/datanotes/expsf3.htm.

	Census Tract 5011, Santa Clara County, California	Census Tract 5014, Santa Clara County, California	Census Tract 5033.21, Santa Clara County, California	Census Tract 5035.10, Santa Clara County, California	Census Tract 5035.11, Santa Clara County, California	Census Tract 5036.01, Santa Clara County, California	Census Tract 5037.02, Santa Clara County, California	Census Tract 5037.03, Santa Clara County, California	Census Tract 5037.07, Santa Clara County, California	Census Tract 5037.09, Santa Clara County, California
Total:	2,520	1,787	1,027	1,311	821	877	1,714	867	1,377	1,540
Less than $10,000	228	163	17	58	16	78	164	26	64	156
$10,000 to $14,999	191	93	25	26	0	18	49	27	26	136
$15,000 to $19,999	149	89	26	46	0	56	96	37	11	94
$20,000 to $24,999	144	109	0	64	46	53	103	72	75	165
$25,000 to $29,999	104	51	0	73	84	87	111	53	44	35
$30,000 to $34,999	67	122	0	44	28	74	76	44	102	67
$35,000 to $39,999	166	143	0	19	47	105	75	22	38	80
$40,000 to $44,999	72	97	19	89	36	48	87	53	134	103
$45,000 to $49,999	112	95	22	49	14	53	45	40	153	79
$50,000 to $59,999	219	173	46	160	63	37	193	44	91	102
$60,000 to $74,999	314	257	72	104	123	138	272	147	98	223
$75,000 to $99,999	311	221	133	253	192	63	155	114	251	166
$100,000 to $124,999	200	70	305	102	108	6	128	67	147	60
$125,000 to $149,999	87	36	140	147	18	12	119	52	57	36
$150,000 to $199,999	109	57	106	66	37	40	14	31	48	38
$200,000 or more	47	11	116	11	9	9	27	38	38	0

U.S. Census Bureau
Census 2000

P53. MEDIAN HOUSEHOLD INCOME IN 1999 (DOLLARS) [1] - Universe: Households
Data Set: Census 2000 Summary File 3 (SF 3) - Sample Data

geographies **1-10** of **12** Next▶

NOTE: Data based on a sample except in P3, P4, H3, and H4. For information on confidentiality protection, sampling error, nonsampling error, definitions, and count corrections see http://factfinder.census.gov/home/en/datanotes/expsf3.htm.

	Census Tract 5011, Santa Clara County, California	Census Tract 5014, Santa Clara County, California	Census Tract 5033.21, Santa Clara County, California	Census Tract 5035.10, Santa Clara County, California	Census Tract 5035.11, Santa Clara County, California	Census Tract 5036.01, Santa Clara County, California	Census Tract 5037.02, Santa Clara County, California	Census Tract 5037.03, Santa Clara County, California	Census Tract 5037.07, Santa Clara County, California	Census Tract 5037.09, Santa Clara County, California
Median household income in 1999	51,646	47,454	110,020	62,868	68,872	38,750	53,833	61,140	54,292	41,814

U.S. Census Bureau
Census 2000

P76. FAMILY INCOME IN 1999 [17] - Universe: Families
Data Set: Census 2000 Summary File 3 (SF 3) - Sample Data

geographies **1-10** of **12** Next▶

NOTE: Data based on a sample except in P3, P4, H3, and H4. For information on confidentiality protection, sampling error, nonsampling error, definitions, and count corrections see http://factfinder.census.gov/home/en/datanotes/expsf3.htm.

	Census Tract 5011, Santa Clara County, California	Census Tract 5014, Santa Clara County, California	Census Tract 5033.21, Santa Clara County, California	Census Tract 5035.10, Santa Clara County, California	Census Tract 5035.11, Santa Clara County, California	Census Tract 5036.01, Santa Clara County, California	Census Tract 5037.02, Santa Clara County, California	Census Tract 5037.03, Santa Clara County, California	Census Tract 5037.07, Santa Clara County, California	Census Tract 5037.09, Santa Clara County, California
Total:	1,547	1,334	973	1,175	770	721	1,467	817	1,171	1,414
Less than $10,000	85	86	9	71	16	46	81	37	69	163
$10,000 to $14,999	85	84	25	26	0	18	26	27	13	135
$15,000 to $19,999	95	67	17	52	0	52	115	49	41	92
$20,000 to $24,999	110	84	0	70	37	48	103	67	75	145
$25,000 to $29,999	67	53	0	75	84	74	106	38	26	28
$30,000 to $34,999	29	75	11	22	23	45	61	44	120	102
$35,000 to $39,999	126	118	11	12	47	80	87	32	34	51
$40,000 to $44,999	58	101	28	74	27	48	76	48	114	108
$45,000 to $49,999	98	69	22	35	22	32	63	31	42	75
$50,000 to $59,999	129	146	22	145	54	48	168	71	111	81
$60,000 to $74,999	155	191	57	84	130	110	239	114	119	164
$75,000 to $99,999	213	148	142	241	187	56	130	97	224	157
$100,000 to $124,999	136	30	280	86	88	8	66	53	62	46
$125,000 to $149,999	78	32	141	121	23	7	113	42	61	36
$150,000 to $199,999	47	45	92	61	27	40	14	42	29	31
$200,000 or more	36	5	116	0	5	9	19	25	31	0

U.S. Census Bureau
Census 2000

P77. MEDIAN FAMILY INCOME IN 1999 (DOLLARS) [1] - Universe: Families
Data Set: Census 2000 Summary File 3 (SF 3) - Sample Data

geographies **1-10** of **12** Next▶

NOTE: Data based on a sample except in P3, P4, H3, and H4. For information on confidentiality protection, sampling error, nonsampling error, definitions, and count corrections see http://factfinder.census.gov/home/en/datanotes/expsf3.htm.

	Census Tract 5011, Santa Clara County, California	Census Tract 5014, Santa Clara County, California	Census Tract 5033.21, Santa Clara County, California	Census Tract 5035.10, Santa Clara County, California	Census Tract 5035.11, Santa Clara County, California	Census Tract 5036.01, Santa Clara County, California	Census Tract 5037.02, Santa Clara County, California	Census Tract 5037.03, Santa Clara County, California	Census Tract 5037.07, Santa Clara County, California	Census Tract 5037.09, Santa Clara County, California
Median family income in 1999	52,651	44,917	110,221	60,550	68,354	39,880	51,685	55,461	53,844	38,750

U.S. Census Bureau
Census 2000

P82. PER CAPITA INCOME IN 1999 (DOLLARS) [1] - Universe: Total population
Data Set: Census 2000 Summary File 3 (SF 3) - Sample Data

geographies **1-10** of **12** Next▶

NOTE: Data based on a sample except in P3, P4, H3, and H4. For information on confidentiality protection, sampling error, nonsampling error, definitions, and count corrections see http://factfinder.census.gov/home/en/datanotes/expsf3.htm.

	Census Tract	Census Tract	Census Tract	Census Tract	Census Tract	Census Tract	Census Tract	Census Tract	Census Tract	Census Tract

	5011, Santa Clara County, California	5014, Santa Clara County, California	5033.21, Santa Clara County, California	5035.10, Santa Clara County, California	5035.11, Santa Clara County, California	5036.01, Santa Clara County, California	5037.02, Santa Clara County, California	5037.03, Santa Clara County, California	5037.07, Santa Clara County, California	5037.09, Santa Clara County, California
Per capita income in 1999	20,631	15,220	25,515	15,593	16,417	14,684	12,233	13,328	15,720	11,771

U.S. Census Bureau
Census 2000

P88. RATIO OF INCOME IN 1999 TO POVERTY LEVEL [10] - Universe: Population for whom poverty status is determined
Data Set: Census 2000 Summary File 3 (SF 3) - Sample Data

geographies **1-10** of **12** Next▶

NOTE: Data based on a sample except in P3, P4, H3, and H4. For information on confidentiality protection, sampling error, nonsampling error, definitions, and count corrections see http://factfinder.census.gov/home/en/datanotes/expsf3.htm.

	Census Tract 5011, Santa Clara County, California	Census Tract 5014, Santa Clara County, California	Census Tract 5033.21, Santa Clara County, California	Census Tract 5035.10, Santa Clara County, California	Census Tract 5035.11, Santa Clara County, California	Census Tract 5036.01, Santa Clara County, California	Census Tract 5037.02, Santa Clara County, California	Census Tract 5037.03, Santa Clara County, California	Census Tract 5037.07, Santa Clara County, California	Census Tract 5037.09, Santa Clara County, California
Total:	7,886	6,428	4,845	6,339	3,869	3,101	8,223	4,602	6,201	6,280
Under .50	591	613	56	424	135	275	708	337	413	639
.50 to .74	305	198	51	87	42	38	249	213	238	275
.75 to .99	363	233	64	469	13	139	422	116	366	440
1.00 to 1.24	383	285	34	205	279	124	377	150	295	504
1.25 to 1.49	251	467	0	243	101	106	541	174	434	398
1.50 to 1.74	569	372	90	117	144	250	476	275	174	264
1.75 to 1.84	136	211	12	163	91	102	244	127	37	76
1.85 to 1.99	123	133	39	150	95	191	253	272	363	113
2.00 and over	5,165	3,916	4,499	4,481	2,969	1,876	4,953	2,938	3,881	3,571

U.S. Census Bureau
Census 2000

P89. POVERTY STATUS IN 1999 BY AGE BY HOUSEHOLD TYPE [39] - Universe: Population for whom poverty status is determined
Data Set: Census 2000 Summary File 3 (SF 3) - Sample Data

geographies **1-10** of **12** Next▶

NOTE: Data based on a sample except in P3, P4, H3, and H4. For information on confidentiality protection, sampling error, nonsampling error, definitions, and count corrections see http://factfinder.census.gov/home/en/datanotes/expsf3.htm.

	Census Tract 5011, Santa Clara County, California	Census Tract 5014, Santa Clara County, California	Census Tract 5033.21, Santa Clara County, California	Census Tract 5035.10, Santa Clara County, California	Census Tract 5035.11, Santa Clara County, California	Census Tract 5036.01, Santa Clara County, California	Census Tract 5037.02, Santa Clara County, California	Census Tract 5037.03, Santa Clara County, California	Census Tract 5037.07, Santa Clara County, California	Census Tract 5037.09, Santa Clara County, California
Total:	7,886	6,428	4,845	6,339	3,869	3,101	8,223	4,602	6,201	6,280
Income in 1999 below poverty level:	1,259	1,044	171	980	190	452	1,379	666	1,017	1,354
Under 65 years:	1,071	969	159	944	182	420	1,279	661	1,001	1,308
In married-couple families	402	468	114	449	20	266	773	331	450	742
In other families:	425	437	37	403	145	79	407	314	486	450
Male householder, no wife present	192	245	9	68	38	21	75	62	98	125
Female householder, no husband present	233	192	28	335	107	58	332	252	388	325
Unrelated individuals	244	64	8	92	17	75	99	16	65	116
65 to 74 years:	66	53	8	25	0	24	39	5	16	30
In married-couple families	26	13	8	5	0	0	18	0	0	7
In other families:	0	15	0	6	0	9	6	4	16	18
Male householder, no wife present	0	0	0	0	0	9	0	0	0	0

Female householder, no husband present	0	15	0	6	0	0	6	4	16	18
Unrelated individuals	40	25	0	14	0	15	15	1	0	5
75 years and over:	122	22	4	11	8	8	61	0	0	16
In married-couple families	15	0	4	11	0	0	25	0	0	16
In other families:	26	0	0	0	8	0	14	0	0	0
Male householder, no wife present	16	0	0	0	0	0	0	0	0	0
Female householder, no husband present	10	0	0	0	8	0	14	0	0	0
Unrelated individuals	81	22	0	0	0	8	22	0	0	0
Income in 1999 at or above poverty level:	6,627	5,384	4,674	5,359	3,679	2,649	6,844	3,936	5,184	4,926
Under 65 years:	5,958	5,040	4,311	4,980	3,385	2,347	6,339	3,686	4,932	4,660
In married-couple families	3,638	2,921	3,501	3,847	2,652	1,557	4,807	2,613	3,440	3,119
In other families:	1,484	1,657	741	962	666	602	1,382	1,010	1,215	1,449
Male householder, no wife present	623	806	297	65	206	206	693	438	759	650
Female householder, no husband present	861	851	444	897	460	396	689	572	456	799
Unrelated individuals	836	462	69	171	67	188	150	63	277	92
65 to 74 years:	236	145	231	218	178	191	319	173	167	191
In married-couple families	99	95	169	161	144	136	182	123	94	150
In other families:	86	29	62	35	21	37	78	50	51	41
Male householder, no wife present	28	21	14	0	15	0	52	22	39	19
Female householder, no husband present	58	8	48	35	6	37	26	28	12	22
Unrelated individuals	51	21	0	22	13	18	59	0	22	0
75 years and over:	433	199	132	161	116	111	186	77	85	75
In married-couple families	169	99	132	102	48	79	76	38	67	40
In other families:	74	46	0	44	68	21	43	30	7	27
Male householder, no wife present	15	11	0	0	13	0	17	11	7	18
Female householder, no husband present	59	35	0	44	55	21	26	19	0	9
Unrelated individuals	190	54	0	15	0	11	67	9	11	8

U.S. Census Bureau
Census 2000

Standard Error/Variance documentation for this dataset:
Accuracy of the Data: Census 2000 Summary File 3 (SF 3) - Sample Data (PDF 141.5KB)

The letters PDF or symbol indicate a document is in the Portable Document Format (PDF). To view the file you will need the Adobe® Acrobat® Reader, which is available for **free** from the Adobe web site.

Detailed Tables

Note: use download to retrieve all selected tables and geographies

P52. HOUSEHOLD INCOME IN 1999 [17] - Universe: Households

Data Set: Census 2000 Summary File 3 (SF 3) - Sample Data

69648

geographies **1-10** of **11** Next▶

NOTE: Data based on a sample except in P3, P4, H3, and H4. For information on confidentiality protection, sampling error, nonsampling error, definitions, and count corrections see http://factfinder.census.gov/home/en/datanotes/expsf3.htm.

	Census Tract 5014, Santa Clara County, California	Census Tract 5015.01, Santa Clara County, California	Census Tract 5035.06, Santa Clara County, California	Census Tract 5035.10, Santa Clara County, California	Census Tract 5036.02, Santa Clara County, California	Census Tract 5037.02, Santa Clara County, California	Census Tract 5037.03, Santa Clara County, California	Census Tract 5037.06, Santa Clara County, California	Census Tract 5037.07, Santa Clara County, California	Census Tract 5037.08, Santa Clara County, California
Total:	1,787	1,056	1,238	1,311	1,161	1,714	867	2,148	1,377	729
Less than $10,000	163	71	152	58	110	164	26	316	64	43
$10,000 to $14,999	93	56	23	26	53	49	27	172	26	31
$15,000 to $19,999	89	88	55	46	70	96	37	125	11	43
$20,000 to $24,999	109	44	38	64	20	103	72	191	75	29
$25,000 to $29,999	51	73	37	73	50	111	53	155	44	20
$30,000 to $34,999	122	95	28	44	56	76	44	78	102	28
$35,000 to $39,999	143	54	71	19	46	75	22	123	38	97
$40,000 to $44,999	97	76	52	89	45	87	53	114	134	19
$45,000 to $49,999	95	85	43	49	58	45	40	96	153	8
$50,000 to $59,999	173	75	96	160	168	193	44	216	91	63
$60,000 to $74,999	257	97	84	104	149	272	147	240	98	90
$75,000 to $99,999	221	141	238	253	150	155	114	218	251	117
$100,000 to $124,999	70	76	178	102	157	128	67	56	147	23
$125,000 to $149,999	36	7	44	147	7	119	52	35	57	48
$150,000 to $199,999	57	7	49	66	22	14	31	13	48	55
$200,000 or more	11	11	50	11	0	27	38	0	38	15

U.S. Census Bureau
Census 2000

P53. MEDIAN HOUSEHOLD INCOME IN 1999 (DOLLARS) [1] - Universe: Households

Data Set: Census 2000 Summary File 3 (SF 3) - Sample Data

geographies **1-10** of **11** Next▶

NOTE: Data based on a sample except in P3, P4, H3, and H4. For information on confidentiality protection, sampling error, nonsampling error, definitions, and count corrections see http://factfinder.census.gov/home/en/datanotes/expsf3.htm.

	Census Tract 5014, Santa Clara County, California	Census Tract 5015.01, Santa Clara County, California	Census Tract 5035.06, Santa Clara County, California	Census Tract 5035.10, Santa Clara County, California	Census Tract 5036.02, Santa Clara County, California	Census Tract 5037.02, Santa Clara County, California	Census Tract 5037.03, Santa Clara County, California	Census Tract 5037.06, Santa Clara County, California	Census Tract 5037.07, Santa Clara County, California	Census Tract 5037.08, Santa Clara County, California
Median household income in 1999	47,454	42,136	65,962	62,868	53,520	53,833	61,140	36,217	54,292	56,118

Detailed Tables

Note: use download to retrieve all selected tables and geographies

P52. HOUSEHOLD INCOME IN 1999 [17] - Universe: Households
Data Set: Census 2000 Summary File 3 (SF 3) - Sample Data

◀Previous geographies **11-12** of **12**

NOTE: Data based on a sample except in P3, P4, H3, and H4. For information on confidentiality protection, sampling error, nonsampling error, definitions, and count corrections see http://factfinder.census.gov/home/en/datanotes/expsf3.htm.

	Census Tract 5040.01, Santa Clara County, California	Census Tract 5040.02, Santa Clara County, California
Total:	1,428	1,071
Less than $10,000	51	35
$10,000 to $14,999	64	47
$15,000 to $19,999	71	12
$20,000 to $24,999	65	57
$25,000 to $29,999	101	19
$30,000 to $34,999	82	29
$35,000 to $39,999	54	21
$40,000 to $44,999	71	78
$45,000 to $49,999	60	84
$50,000 to $59,999	154	75
$60,000 to $74,999	152	126
$75,000 to $99,999	338	180
$100,000 to $124,999	101	207
$125,000 to $149,999	46	63
$150,000 to $199,999	0	26
$200,000 or more	18	12

U.S. Census Bureau
Census 2000

P53. MEDIAN HOUSEHOLD INCOME IN 1999 (DOLLARS) [1] - Universe: Households
Data Set: Census 2000 Summary File 3 (SF 3) - Sample Data

◀Previous geographies **11-12** of **12**

NOTE: Data based on a sample except in P3, P4, H3, and H4. For information on confidentiality protection, sampling error, nonsampling error, definitions, and count corrections see http://factfinder.census.gov/home/en/datanotes/expsf3.htm.

	Census Tract 5040.01, Santa Clara County, California	Census Tract 5040.02, Santa Clara County, California
Median household income in 1999	55,536	69,648

U.S. Census Bureau
Census 2000

State & County QuickFacts

California

People QuickFacts	California	USA
Population, 2009 estimate	36,961,664	307,006,550
Population, percent change, April 1, 2000 to July 1, 2009	9.1%	9.1%
Population estimates base (April 1) 2000	33,871,648	281,424,602
Persons under 5 years old, percent, 2009	7.5%	6.9%
Persons under 18 years old, percent, 2009	25.5%	24.3%
Persons 65 years old and over, percent, 2009	11.2%	12.9%
Female persons, percent, 2009	49.9%	50.7%
White persons, percent, 2009 (a)	76.4%	79.6%
Black persons, percent, 2009 (a)	6.6%	12.9%
American Indian and Alaska Native persons, percent, 2009 (a)	1.2%	1.0%
Asian persons, percent, 2009 (a)	12.7%	4.6%
Native Hawaiian and Other Pacific Islander, percent, 2009 (a)	0.4%	0.2%
Persons reporting two or more races, percent, 2009	2.6%	1.7%
Persons of Hispanic or Latino origin, percent, 2009 (b)	37.0%	15.8%
White persons not Hispanic, percent, 2009	41.7%	65.1%
Living in same house in 1995 and 2000, pct 5 yrs old & over	50.2%	54.1%
Foreign born persons, percent, 2000	26.2%	11.1%
Language other than English spoken at home, pct age 5+, 2000	39.5%	17.9%
High school graduates, percent of persons age 25+, 2000	76.8%	80.4%
Bachelor's degree or higher, pct of persons age 25+, 2000	26.6%	24.4%
Persons with a disability, age 5+, 2000	5,923,361	49,746,248

Federal spending, 2008	299,922,630[1]	2,771,782,152[2]

Geography QuickFacts	California	USA
Land area, 2000 (square miles)	155,959.34	3,537,438.44
Persons per square mile, 2000	217.2	79.6
FIPS Code	06	

1: Includes data not distributed by county.
2: Includes data not distributed by state.

(a) Includes persons reporting only one race.
(b) Hispanics may be of any race, so also are included in applicable race categories.

D: Suppressed to avoid disclosure of confidential information
F: Fewer than 100 firms
FN: Footnote on this item for this area in place of data
NA: Not available
S: Suppressed; does not meet publication standards
X: Not applicable
Z: Value greater than zero but less than half unit of measure shown

Source U.S. Census Bureau: State and County QuickFacts. Data derived from Population Estimates, Census of Population and Housing, Small Area Income and Poverty Estimates, State and County Housing Unit Estimates, County Business Patterns, Nonemployer Statistics, Economic Census, Survey of Business Owners, Building Permits, Consolidated Federal Funds Report
Last Revised: Thursday, 04-Nov-2010 12:46:17 EDT

HU_SIZE_O	HU_SIZE_R	STATE	COUNTY	COUSUB	PLACE	TRACT *	UR	BLOCK_GROU
2.87	3.93	06	085	92830	68000	501400	U	2
4.46	3.72	06	085	92830	68000	501501	U	1
5.63	4.31	06	085	92830	68000	503506	U	1
4.84	5.43	06	085	92830	68000	503510	U	3
4.9	3.96	06	085	92830	68000	503602	U	1
4.44	3.35	06	085	92830	68000	503602	U	2
4.88	5.02	06	085	92830	68000	503702	U	3
5.63	4.42	06	085	92830	68000	503703	U	2
3.96	3.29	06	085	92830	68000	503706	U	2
5.7	4.47	06	085	92830	68000	503707	U	1
4.29	4.07	06	085	92830	68000	503708	U	1
4.56	6.67	06	085	92830	68000	504002	U	1

FID	Shape *	AREA	PERIMETER	CEN00BG03_	CEN00BG031	LOGRECNO
7	Polygon	243554.358614	2031.169766	18400	19701	0074161
11	Polygon	611136.298823	3241.729086	18449	19750	0074165
5	Polygon	385049.569873	2971.052142	18396	19697	0074519
9	Polygon	252438.776028	2166.759976	18409	19710	0074537
4	Polygon	254849.977424	2083.552572	18373	19674	0074548
8	Polygon	933668.162705	4214.30937	18402	19703	0074549
6	Polygon	331908.418398	2476.331351	18399	19700	0074554
10	Polygon	329461.441797	2973.253463	18413	19714	0074558
1	Polygon	617239.921045	3237.713437	18171	19470	0074562
2	Polygon	136413.659061	1604.039839	18222	19522	0074565
0	Polygon	1003158.19706	4417.265319	18082	19380	0074570
3	Polygon	443053.69571	2801.219626	18249	19549	0074602

SUMLEV_090	WATER	OID	AREA	PERIMETER	SPLIT_BG_	SPLIT_BG_I
060859283068000501400U2	0	9972	243554.358614	2031.169766	9973	9973
060859283068000501501U1	0	10014	611136.298823	3241.729086	10015	10015
060859283068000503506U1	0	9970	385049.569873	2971.052142	9971	9971
060859283068000503510U3	0	9981	252438.776028	2166.759976	9982	9982
060859283068000503602U1	0	9953	254849.977424	2083.552572	9954	9954
060859283068000503602U2	0	9974	933668.162705	4214.30937	9975	9975
060859283068000503702U3	0	9971	331908.418398	2476.331351	9972	9972
060859283068000503703U2	0	9983	329461.441797	2973.253463	9984	9984
060859283068000503706U2	0	9799	617239.921045	3237.713437	9800	9800
060859283068000503707U1	0	9834	136413.659061	1604.039839	9835	9835
060859283068000503708U1	0	9737	1003158.19706	4417.265319	9738	9738
060859283068000504002U1	0	9858	443053.69571	2801.219626	9859	9859

LOGRECNO *	SUMLEV_090	PLACE_NAME	PLACE_TYPE	UA	UA_NAME	UA_TYPE
0074161	06085928306800050140 0U2	San Jose	CITY	79039	San Jose	U
0074165	060859283068000501501U1	San Jose	CITY	79039	San Jose	U
0074519	060859283068000503506U1	San Jose	CITY	79039	San Jose	U
0074537	060859283068000503510U3	San Jose	CITY	79039	San Jose	U
0074548	060859283068000503602U1	San Jose	CITY	79039	San Jose	U
0074549	060859283068000503602U2	San Jose	CITY	79039	San Jose	U
0074554	060859283068000503702U3	San Jose	CITY	79039	San Jose	U
0074558	060859283068000503703U2	San Jose	CITY	79039	San Jose	U
0074562	060859283068000503706U2	San Jose	CITY	79039	San Jose	U
0074565	060859283068000503707U1	San Jose	CITY	79039	San Jose	U
0074570	060859283068000503708U1	San Jose	CITY	79039	San Jose	U
0074602	060859283068000504002U1	San Jose	CITY	79039	San Jose	U

BLKGRP	AREALAND	AREAWATR	POP100	POP	POP_URB	POP_RUR	WHITE	BLACK
2	243546	0	1208	1239	1239	0	416	31
1	611135	0	4232	4232	4232	0	1077	70
1	385045	0	2533	2447	2447	0	357	103
3	252433	0	1947	2035	2035	0	675	28
1	254843	0	1725	1702	1702	0	674	81
2	933666	0	3020	3043	3043	0	672	61
3	331905	0	1655	1670	1670	0	501	11
2	329459	0	2473	2329	2329	0	208	101
2	617235	0	4045	4060	4060	0	1321	230
1	136413	0	2129	2306	2306	0	498	138
1	1003155	0	2039	2090	2090	0	185	108
1	443053	0	1924	2329	2329	0	482	136

INDIAN	ASIAN	ISLAND	OTHER	MULTIRACE	HISP	MALE	FEMALE	F_18PLUS
84	0	0	598	110	804	620	619	415
35	776	21	2045	208	3030	2234	1998	1330
0	1381	41	509	56	840	1143	1304	922
0	296	24	920	92	1402	1103	932	725
13	123	0	692	119	1274	802	900	573
0	1037	0	1019	254	1682	1612	1431	990
20	46	0	1077	15	1562	858	812	563
22	818	0	1130	50	1371	1250	1079	716
0	1489	0	913	107	1944	1970	2090	1588
54	617	0	761	238	1538	1235	1071	704
0	1504	0	193	100	357	1088	1002	678
0	990	0	627	94	1130	1175	1154	706

M_18PLUS	M_21PLUS	F_21PLUS	M_65PLUS	F_65PLUS	POP_HH	POP_GQ	FAM_HH
423	391	388	52	46	1239	0	263
1535	1427	1227	92	158	4219	13	788
653	622	789	62	78	2447	0	504
806	751	638	120	92	2035	0	376
535	475	525	41	103	1702	0	327
1210	1142	947	79	101	3043	0	603
551	516	502	63	81	1670	0	306
756	692	593	37	44	2329	0	445
1438	1335	1543	231	400	3733	327	821
758	712	667	22	38	2306	0	398
752	679	639	85	64	2090	0	425
786	702	668	62	41	2329	0	409

NONFAM_HH	HU100	HU	HU_URBAN	HU_RURAL	HU_OCCUP	HU_VAC	HU_OWN	HU_RENT
5	352	350	350	0	341	9	95	246
96	1075	1075	1075	0	1057	18	392	665
4	536	531	531	0	514	17	175	339
19	389	408	408	0	408	0	307	101
5	382	396	396	0	393	3	155	238
46	784	770	770	0	762	8	452	310
16	330	337	337	0	337	0	164	173
13	485	485	485	0	483	2	160	323
64	1105	1098	1098	0	1086	12	246	840
25	450	460	460	0	460	0	202	258
33	492	498	498	0	498	0	286	212
4	414	452	452	0	443	9	296	147

income	minority	POP100	POP	POP_URB	POP_RUR	WHITE	BLACK	INDIAN
0	0	1422	1568	1568	0	658	0	25
0	0	3238	3238	3238	0	1442	39	40
0	0	2146	2082	2082	0	174	84	0
0	0	2853	2768	2768	0	930	59	11
0	0	1588	1585	1585	0	738	51	46
0	0	2067	1932	1932	0	599	39	0
0	0	1809	1944	1944	0	470	2	0
0	0	1070	1056	1056	0	537	34	71
0	0	2058	2072	2072	0	1167	34	29
0	0	4113	4113	4113	0	1134	70	57
0	0	2581	2566	2566	0	988	75	52
0	0	2189	2333	2333	0	692	9	0
0	0	2716	2821	2821	0	630	89	34
0	0	1428	1146	1146	0	637	51	0
0	0	2513	2603	2603	0	534	57	38
0	0	3722	3637	3637	0	774	107	50
0	0	1580	1627	1627	0	487	44	0
0	0	585	644	644	0	95	0	0
0	0	3636	3231	3231	0	681	32	149

ASIAN	ISLAND	OTHER	MULTIRACE	HISP	MALE	FEMALE	F_18PLUS	M_18PLUS
295	0	535	55	890	862	706	538	590
437	0	970	310	2175	1715	1523	1118	1210
1557	24	0	243	112	1036	1046	728	740
387	0	1259	122	1912	1536	1232	803	883
97	0	523	130	1240	811	774	551	573
540	0	592	162	914	989	943	670	681
1195	0	220	57	695	941	1003	689	695
221	5	118	70	532	574	482	401	444
178	35	409	220	1015	1098	974	699	767
773	31	1802	246	3038	2089	2024	1316	1449
302	0	1053	96	2061	1443	1123	697	952
411	0	1116	105	1767	1169	1164	688	800
1714	0	177	177	729	1441	1380	957	1038
121	0	289	48	747	614	532	354	467
1377	23	498	76	990	1353	1250	917	944
1726	0	891	89	1677	1714	1923	1329	1103
125	0	856	115	1313	819	808	579	583
456	0	87	6	139	322	322	249	226
449	0	1785	135	2495	1556	1675	1180	1142

M_21PLUS	F_21PLUS	M_65PLUS	F_65PLUS	POP_HH	POP_GQ	FAM_HH	NONFAM_H	HU100
530	455	39	33	1568	0	300	26	443
1128	1046	74	152	3164	74	666	77	945
691	710	68	102	2082	0	404	0	431
799	748	46	43	2765	3	500	27	617
452	478	39	75	1585	0	299	5	330
605	626	102	72	1932	0	410	0	426
665	674	70	58	1934	10	360	9	394
398	394	52	69	921	135	244	12	306
664	639	66	147	2072	0	477	20	597
1306	1224	135	173	4113	0	749	12	883
850	667	83	70	2500	66	412	24	511
712	644	112	62	2333	0	372	0	383
922	930	47	110	2821	0	512	46	593
467	318	31	20	1146	0	261	18	359
896	842	39	47	2603	0	538	14	614
1042	1249	86	140	3637	0	853	10	914
531	530	55	49	1627	0	341	0	370
212	231	11	7	644	0	144	0	127
1086	1088	112	145	3231	0	607	17	660

HU	HU_URBAN	HU_RURAL	HU_OCCUP	HU_VAC	HU_OWN	HU_REN	TRACT
443	443	0	441	2	287	154	501100
945	945	0	928	17	289	639	501400
429	429	0	429	0	429	0	503321
623	623	0	611	12	297	314	503510
305	305	0	298	7	281	17	503510
420	420	0	418	2	329	89	503511
400	400	0	400	0	334	66	503511
307	307	0	298	9	103	195	503601
596	596	0	584	12	176	408	503601
883	883	0	878	5	333	545	503702
504	504	0	496	8	187	309	503702
383	383	0	383	0	262	121	503703
629	629	0	615	14	426	189	503707
313	313	0	307	6	225	82	503707
628	628	0	615	13	191	424	503709
910	910	0	910	0	116	794	503709
404	404	0	389	15	327	62	504001
143	143	0	143	0	87	56	504001
622	622	0	622	0	396	226	504002

77.16836735
83.10685608
85.3506244
85.58526012
90.47318612
77.27743271
97.32510288
81.72348485
62.30694981
96.49890591
97.03819174
93.74196314
90.96065225
80.19197208
95.46676911
97.8828705
91.08789183
92.39130435
96.71928196

POP100	POP	POP_URB	POP_RUR	WHITE	BLACK	INDIAN	ASIAN	ISLAND
2039	2090	2090	0	185	108	0	1504	0
4045	4060	4060	0	1321	230	0	1489	0
2129	2306	2306	0	498	138	54	617	0
1924	2329	2329	0	482	136	0	990	0
1725	1702	1702	0	674	81	13	123	0
2533	2447	2447	0	357	103	0	1381	41
1655	1670	1670	0	501	11	20	46	0
1208	1239	1239	0	416	31	84	0	0
3020	3043	3043	0	672	61	0	1037	0
1947	2035	2035	0	675	28	0	296	24
2473	2329	2329	0	208	101	22	818	0
4232	4232	4232	0	1077	70	35	776	21

OTHER	MULTIRACE	HISP	MALE	FEMALE	F_18PLUS	M_18PLUS	M_21PLUS	F_21PLUS
193	100	357	1088	1002	678	752	679	639
913	107	1944	1970	2090	1588	1438	1335	1543
761	238	1538	1235	1071	704	758	712	667
627	94	1130	1175	1154	706	786	702	668
692	119	1274	802	900	573	535	475	525
509	56	840	1143	1304	922	653	622	789
1077	15	1562	858	812	563	551	516	502
598	110	804	620	619	415	423	391	388
1019	254	1682	1612	1431	990	1210	1142	947
920	92	1402	1103	932	725	806	751	638
1130	50	1371	1250	1079	716	756	692	593
2045	208	3030	2234	1998	1330	1535	1427	1227

M_65PLUS	F_65PLUS	POP_HH	POP_GQ	TRACT	U	BLOCK_GROU
85	64	2090	0	503708	U	1
231	400	3733	327	503706	U	2
22	38	2306	0	503707	U	1
62	41	2329	0	504002	U	1
41	103	1702	0	503602	U	1
62	78	2447	0	503506	U	1
63	81	1670	0	503702	U	3
52	46	1239	0	501400	U	2
79	101	3043	0	503602	U	2
120	92	2035	0	503510	U	3
37	44	2329	0	503703	U	2
92	158	4219	13	501501	U	1

94.21052632
90.22167488
101.7779705
96.86560756
87.60282021
96.64895791
98.14371257
74.17271994
91.35721328
85.995086
99.27007299
92.91115312

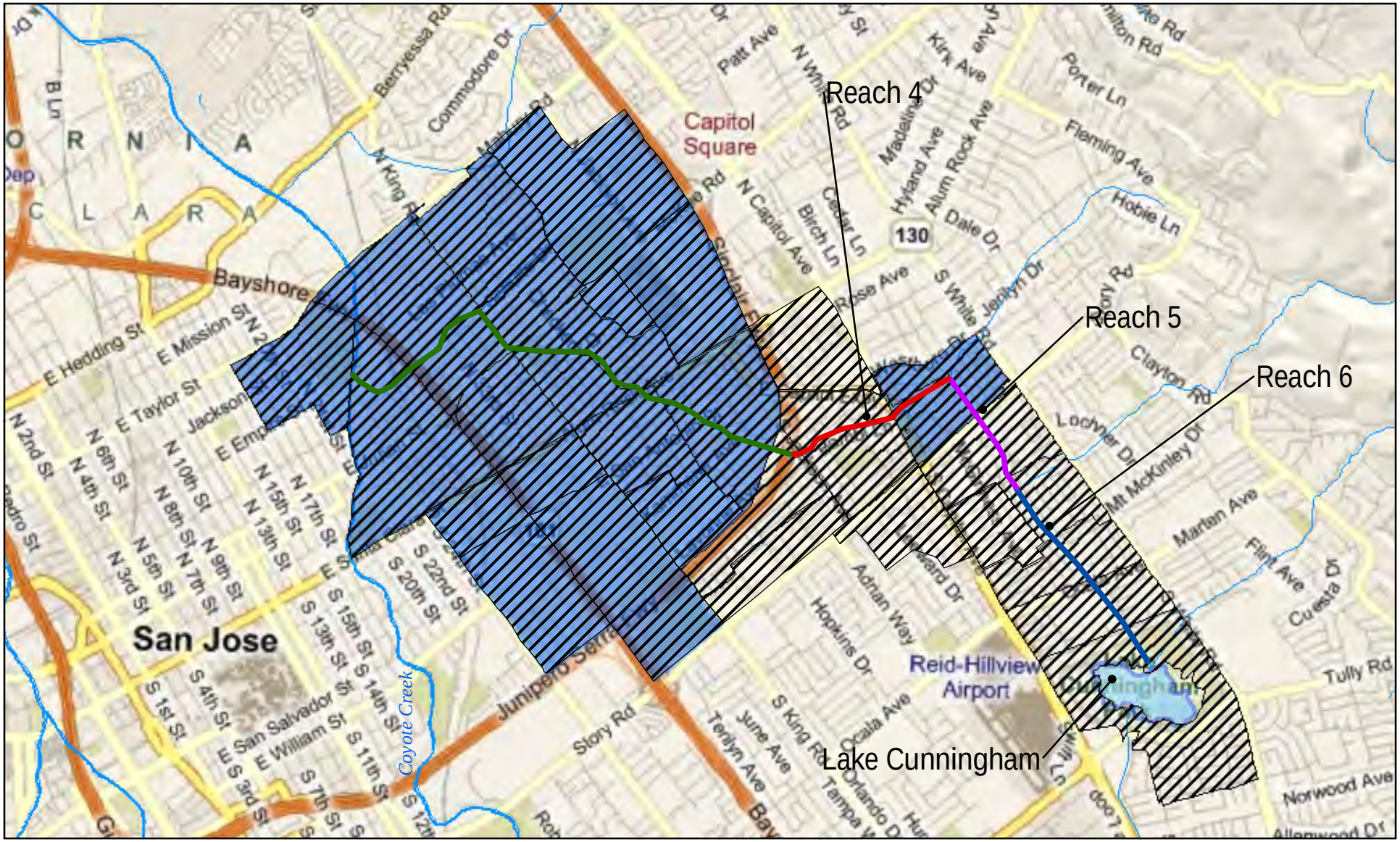

Figure 3-23. Disadvantaged Communities

Lower Silver Creek (Individual Reaches)

- Reaches 1-3 (Construction Complete)
- Reach 4
- Reach 5
- Reach 6
- Lake Cunningham

Disadvantaged Communities

- Low Income Census Tracts
- Minority Census Tracts

N

0 0.25 0.5 1 1.5 Miles

Project: Lower Silver Creek Flood Protection Project

Source: Bing Maps, 2011, American Community Survey, 2000

RMC

APPENDIX 3F

MOU CSJ AND DIST FOR CUNNINGHAM