REGISTERED PROFESSIONAL ENGINEER
????????????
No. ?????
Exp. ??????
CIVIL
STATE OF CALIFORNIA

PROJECT ENGINEER C.E. ?????		20
SENIOR PROJECT ENGINEER C.E. ?????		20
SUPERVISING PROJECT ENGINEER		20
APPROVED BY: DEPUTY PUBLIC WORKS DIRECTOR		20

CONTRA COSTA COUNTY

FLOOD CONTROL AND WATER CONSERVATION DISTRICT

UPPER SAND CREEK BASIN

COUNTY PROJECT NO. 7562-6D8518-10

TO BE SUPPLEMENTED BY STATE STANDARD PLANS
DATED MAY 2006 AND THE LATEST COUNTY STANDARD PLANS

1-800-227-2600

INDEX OF SHEETS

SHEET NO.	DESCRIPTION
1	TITLE SHEET
2	SHEET INDEX

LOCATION MAP
NO SCALE

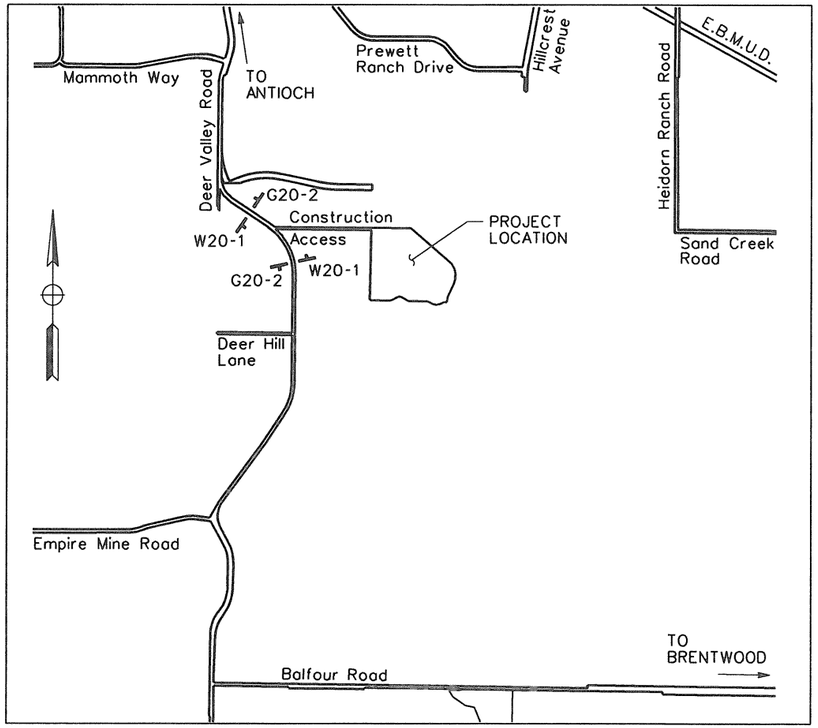

VICINITY AND CONSTRUCTION SIGNING MAP
NO SCALE

CONSTRUCTION AREA SIGNS

TYPE	QUANTITY	DESCRIPTION	DIMENSIONS
G20-2	2	END ROAD WORK	36"X18"
W20-1	2	ROAD WORK AHEAD	30"X30"

NOTE:
1. CONSTRUCTION AREA SIGNS SHALL BE PLACED IN ACCORDANCE WITH THE MANUAL ON UNIFORM TRAFFIC CONTROL DEVICES AND THE CALIFORNIA SUPPLEMENT OR AS DIRECTED BY THE ENGINEER.

THE CONTRACTOR SHALL POSSESS THE CLASS (OR CLASSES) OF LICENSE AS SPECIFIED IN THE "NOTICE TO CONTRACTORS".

PRELIMINARY DRAWING DATED 8-17-10

NOTE:
IN ADDITION TO THE ABBREVIATIONS AND SYMBOLS SHOWN, STANDARD ABBREVIATIONS AND SYMBOLS ARE AVAILABLE ON COUNTY STANDARD PLAN *CA01i AND CALTRANS STANDARD PLANS *A10A THRU *A10D.

FILE NO.	SHEET	OF
FD-3210	1	
CADD FILE* FC851810.001	PEN TBL:	

TITLE		
Sheet #	DWG	
		GENERAL
1	-	TITLE SHEET AND PROJECT LOCATION
2	G-1	LIST OF DRAWINGS, SYMBOLS & ABBREVIATIONS
3	G-2	EXISTING TOPOGRAPHY, PROJECT BOUNDARY, EXISTING UTILITIES & STRUCTURE DEMOLITION
4	G-3	SURVEY CONTROL SYSTEM & GENERAL NOTES
		GEOLOGY
5	S-1	GEOLOGY PLAN AND EXPLORATION LOCATIONS
6	S-2	GEOLOGIC PROFILE ALONG DAM AXIS (Sheet 1 of 2)
7	S-3	GEOLOGIC PROFILE ALONG DAM AXIS (Sheet 2 of 2)
8	S-4	GEOLOGIC SECTIONS (Sheet 1 of 7)
9	S-5	GEOLOGIC SECTIONS (Sheet 2 of 7)
10	S-6	GEOLOGIC SECTIONS (Sheet 3 of 7)
11	S-7	GEOLOGIC SECTIONS (Sheet 4 of 7)
12	S-8	GEOLOGIC SECTIONS (Sheet 5 of 7)
13	S-9	GEOLOGIC SECTIONS (Sheet 6 of 7)
14	S-10	GEOLOGIC SECTIONS (Sheet 7 of 7)
		CIVIL
15	C-1	BASIN SITE PLAN
16	C-2	BASIN GRADING PLAN
17	C-3	BASIN GRADING - SECTIONS & DETAILS (Sheet 1 of 3)
18	C-4	BASIN GRADING - SECTIONS & DETAILS (Sheet 2 of 3)
19	C-5	BASIN GRADING - SECTIONS & DETAILS (Sheet 3 of 3)
20	C-6	BASIN GRADING PLAN - LOW FLOW CHANNEL ALIGNMENT
21	C-7	SLOPE STABILIZATION - PLAN
22	C-8	SLOPE STABILIZATION - SECTIONS AND DETAILS
23	C-11	DAM EXCAVATION PLAN
24	C-12	DAM EMBANKMENT - CROSS-SECTIONS (Sheet 1 of 2)
25	C-13	DAM EMBANKMENT - CROSS-SECTIONS (Sheet 2 of 2)
26	C-14	DAM EMBANKMENT - LONGITUDINAL SECTION
27	C-15	DAM EMBANKMENT - CAMBER, SETTLEMENT MONUMENTS & MISCELLANEOUS DETAILS
28	C-16	SADDLE DAM PROFILE & SECTIONS
29	C-20	OUTLET WORKS - PLAN, PROFILE & CROSS-SECTIONS
30	C-21	OUTLET WORKS - SECTIONS & DETAILS
31	C-22	OUTLET WORKS - INLET STRUCTURE DETAILS
32	C-23	OUTLET WORKS - INLET STRUCTURE AND GATE SHAFT REINFORCEMENT
33	C-24	OUTLET WORKS - OUTLET ENERGY DISSIPATOR SECTIONS & DETAILS
34	C-25	OUTLET WORKS - OUTLET ENERGY DISSIPATOR STRUCTURAL REINFORCEMENT (Sheet 1 of 2)
35	C-26	OUTLET WORKS - OUTLET ENERGY DISSIPATOR - STRUCTURAL REINFORCEMENT (Sheet 2 of 2)
36	C-27	OUTLET WORKS - GATE OPERATOR PLAN AND PROFILE
37	C-28	OUTLET WORKS - GATE OPERATOR PLATFORM DETAILS
38	C-29	OUTLET WORKS - MISCELLANEOUS STEEL DETAILS
39	C-30	EMERGENCY SPILLWAY - PLAN & RATING CURVE
40	C-31	EMERGENCY SPILLWAY - PROFILE, SECTIONS & DETAILS
41	C-32	EMERGENCY SPILLWAY - WEIR SECTIONS & REINFORCEMENT
42	C-33	SLOPE PROTECTION DETAILS
43	C-40	BASIN INLET STRUCTURE - GENERAL ARRANGEMENT
44	C-41	BASIN INLET STRUCTURE - EXCAVATION AND BACKFILL - PLAN, SECTIONS & DETAILS
45	C-42	BASIN INLET STRUCTURE - PLAN & PROFILE
46	C-43	BASIN INLET STRUCTURE - BRIDGE AND ABUTMENTS - PLANS, SECTIONS & DETAILS
47	C-44	BASIN INLET STRUCTURE - INLET WING WALLS - SECTIONS & DETAILS
48	C-45	BASIN INLET STRUCTURE - BASIN WALLS AND BAFFLES - PLANS, SECTIONS & DETAILS

TITLE		
Sheet #	DWG	
		CIVIL (continued)
49	C-46	BASIN INLET STRUCTURE - REINFORCEMENT DETAILS
50	C-47	BASIN INLET STRUCTURE - BRIDGE AND ABUTMENTS - REINFORCEMENT DETAILS
51	C-48	BASIN INLET STRUCTURE - INLET WING WALLS - REINFORCEMENT DETAILS
52	C-49	BASIN INLET STRUCTURE - BRIDGE ABUTMENT AND STILLING BASIN WALL REINFORCEMENT
		MGE DRAWINGS - STORM DRAIN BASIN INLET
53	C-60	STORM DRAIN BASIN INLET STRUCTURE PLAN
54	C-61	STORM DRAIN BASIN INLET STRUCTURE - DETAILS (Sheet 1 of 2)
55	C-62	STORM DRAIN BASIN INLET STRUCTURE - DETAILS (Sheet 2 of 2)
56	C-63	STORM DRAIN BASIN STILLING BASIN PLAN
57	C-64	STORM DRAIN BASIN STILLING BASIN - DETAILS (Sheet 1 of 2)
58	C-65	STORM DRAIN BASIN STILLING BASIN - DETAILS (Sheet 2 of 2)

ABBREVIATIONS

c.j.	–	CONTROL JOINT
E	–	EXISTING
EA	–	EACH
EF	–	EACH FACE
EL	–	ELEVATION
FF	–	FAR FACE
HSS	–	HOLLOW STRUCTURE SECTION
IE	–	INVERT ELEVATION
INCL	–	INCLINED
N	–	NEW
NF	–	NEAR FACE
MNWS	–	MAXIMUM NORMAL WATER SURFACE
NIC	–	NOT IN CONTRACT
NOM	–	NOMINAL
OC	–	ON CENTER
PP	–	POWER POLE
SCMSA	–	SACRAMENTO COUNTY MUNICIPAL SERVICES AGENCY
SS	–	STAINLESS STEEL
STR	–	STRAIGHT
T&B	–	TOP AND BOTTOM
TOW	–	TOP OF WALL

GENERAL LEGEND

- EMBANKMENT SLOPE
- EXCAVATION SLOPE
- 2% — DIRECTION AND GRADE OF SLOPE
- DRAINAGE DITCH
- POWER POLE
- 057042022 — PARCEL NUMBER, ASSESSOR'S PARCEL NUMBER

MATERIAL TYPE

1. CLAY
2. FILTER SAND
3. DRAIN GRAVEL
4. RANDOM FILL
5. AGGREGATE BASE
6. STRUCTURAL FILL

DRAFT - 90% REVIEW

G-1

REVISIONS			
NO.	DESCRIPTION	BY	DATE

DES.: D.W.
DRAWN: P.Y.M.
CHKD.: K.V.S.
DATE: 08-16-10
SCALE: NONE
FLD. BK. xxxx

REGISTERED PROFESSIONAL ENGINEER ALBERTO PUGLIESE No. 37051 EXP Civil STATE OF CALIFORNIA

PROJECT ENGINEER

PLANS APPROVAL DATE

GEI Consultants

CONTRA COSTA COUNTY
PUBLIC WORKS DEPARTMENT
255 GLACIER DRIVE
MARTINEZ, CALIFORNIA 94553

FOR REDUCED PLANS ORIGINAL SCALE IS IN INCHES
0 1 2 3

BASE MAP	EAST COORD.	NORTH COORD.
L23	1635	528

UPPER SAND CREEK DETENTION BASIN

LIST OF DRAWINGS, SYMBOLS & ABBREVIATIONS

FILE NO. FD-3210

SHEET XX OF YY

CADD FILE# G-1.dwg

PEN TBL GEIWALKER.ctb

G-1 08-16-10 PYM

PROJECT LIMITS		
POINT #	NORTHING	EASTING
1	2169782.50	6195753.17
2	2169781.07	6195967.37
3	2169799.07	6195967.37
4	2169797.71	6196467.49
5	2169777.71	6196467.36
6	2169777.07	6196563.58
7	2169776.36	6196669.80
8	2169527.95	6197110.08
9	2169487.11	6197546.98
10	2169368.20	6197595.17
11	2169350.78	6197559.34
12	2169207.54	6197398.34
13	2168915.55	6197553.85
14	2168613.07	6197234.31
15	2168496.68	6197195.80
16	2168436.98	6197163.77
17	2168217.60	6197163.77
18	2167967.83	6196757.22
19	2168122.11	6196452.70
20	2168155.32	6196215.95
21	2168085.81	6196044.73
22	2168085.81	6195898.86
23	2168274.18	6195718.09
24	2168300.50	6195718.76
25	2168301.72	6195608.62
26	2168404.88	6195627.04
27	2168458.88	6195638.23
28	2168529.92	6195645.80
29	2168529.37	6195722.89
30	2168699.54	6195727.00
31	2169070.86	6195735.98

CONSTRUCTION ACCESS
MANHOLE (PROTECT IN PLACE)
APPROXIMATE EXISTING CALPINE 10-INCH-DIA. GAS LINE (LOCATE IN THE FIELD, PROTECT IN PLACE)
SAND CREEK
SOIL STOCKPILES (REMOVE)
APPROXIMATE LOCATION OF ABANDONED OIL WELL (SEE NOTE 1)
84" CMP CANS (REMOVE)
12" STEEL RISER (REMOVE)
DEBRIS (REMOVE)
PIEZOMETER (DEMOLISH)
PROJECT LIMITS (TYP) NO ACCESS ALLOWED OUTSIDE PROJECT LIMITS
TWO 84" CONCRETE STORM DRAINS (LOCATE IN THE FIELD, PROTECT IN PLACE)
CONCRETE HEADWALL & WINGWALLS (PROTECT IN PLACE)
CONCRETE DEBRIS (REMOVE)
2"-3" STEEL PIPE PROTRUDING OUT OF BANK (REMOVE)
ABANDONED WELL (PROTECT IN PLACE)
EXISTING WELL (PROTECT IN PLACE)
REMOVE FENCE (CL, 4400± LF)
BASIN OUTLET 48" CMP CULVERT (REMOVE)
2 CMP PIPES IN CREEK BED (REMOVE)
REMOVE GROUTED RSP (± 2200 SQUARE FEET)
APPROX. 15' DEEP 84" CMP RISERS WITH TRASH RACKS (REMOVE)
LIVE WATERLINE (PROTECT IN PLACE)
EXISTING WATER OUTLET (PROTECT IN PLACE)
DEMOLISH 3 STRUCTURES AND 2 DWELLINGS (NIC)
REMOVE GROUTED RSP (±3000 SQUARE FEET)
REMOVE TWO 84" CMP DISCHARGE PIPES (±190 LF, EA)
PG&E OVERHEAD DISTRIBUTION LINE (TO BE REMOVED AND RELOCATED BY PG&E)
R=280.0'
Δ = 116° 52' 07"
SAND CREEK
N
N 2169800
N 2169600
N 2169400
N 2169200
N 2169000
N 2168800
N 2168600
N 2168400
N 2168200
N 2168000
E 6195000
E 6195200
E 6195400
E 6195600
E 6195800
E 6196000
E 6196200
E 6196400
E 6196600
E 6196800
E 6197000
E 6197200
E 6197400
E 6197600
E 6197800

NOTES:
1. BASED ON AVAILABLE WELL ABANDONMENT RECORD, IT IS EXPECTED THAT TOP OF WELL CASING IS BELOW BOTTOM OF EXCAVATION. IF CASING IS ENCOUNTERED, NOTIFY ENGINEER.

DRAFT - 90% REVIEW

G-2

REVISIONS			
NO.	DESCRIPTION	BY	DATE

DES.: K.V.S.
DRAWN: P.Y.M.
CHKD.: D.W.
DATE: 08-16-10
SCALE: 1" = 100'
FLD. BK. xxxx

REGISTERED PROFESSIONAL ENGINEER ALBERTO PUJOL-NIGI No. 37051 EXP CIVIL STATE OF CALIFORNIA

PROJECT ENGINEER
PLANS APPROVAL DATE

GEI Consultants

CONTRA COSTA COUNTY
PUBLIC WORKS DEPARTMENT
255 GLACIER DRIVE
MARTINEZ, CALIFORNIA 94553

0 100 200
SCALE, FEET

FOR REDUCED PLANS ORIGINAL SCALE IS IN INCHES
0 1 2 3

BASE MAP	EAST COORD.	NORTH COORD.
L23	1635	528

UPPER SAND CREEK DETENTION BASIN

EXISTING TOPOGRAPHY, PROJECT BOUNDARY, EXISTING UTILITIES & STRUCTURE DEMOLITION

FILE NO. FD-3210
SHEET XX OF YY
CADD FILE# G-2.dwg
PEN TBL. GEIWALKER.ctb

G-2 08-16-10 KVS/PYM

SURVEY NOTES

VERTICAL CONTROL INFORMATION

THE TOPOGRAPHIC SURVEY AND THE ELEVATIONS SHOWN HEREON WERE BASED UPON 1929 NGVD SEA LEVEL DATUM.

HORIZONTAL CONTROL INFORMATION

HORIZONTAL CONTROL IS BASED UPON THE CALIFORNIA STATE PLANE COORDINATE SYSTEM, ZONE 3, NAD 83.

NOTES REGARDING TOPOGRAPHIC SURVEYS AND IMAGES

1. TOPOGRAPHY PROVIDED BY CONTRA COSTA COUNTY FLOOD CONTROL AND WATER CONSERVATION DISTRICT AND IS BASED ON THE AERIAL SURVEY PERFORMED IN MARCH AND APRIL 2008 AS PART OF THE CONTRA COSTA ORTHO IMAGERY PROJECT.
2. PROJECT HORIZONTAL AND VERTICAL CONTROL SHALL BE USED FOR PROJECT USE ONLY.

GENERAL NOTES

1. THE CONTRACTOR SHALL COORDINATE WORK WITH PG&E WHEN WORKING NEAR POWER LINES AND POWER POLES TO ARRANGE FOR PG&E TO CUT OFF POWER AS NEEDED FOR SAFETY.
2. THE CONTRACTOR SHALL INFORM ADJACENT LANDOWNERS OF SHARED ACCESS ROUTE SAFETY ISSUES, TRAFFIC PATTERNS, AND OPERATION AREAS ON A DAILY BASIS. THE METHOD FOR PROVIDING THE INFORMATION SHALL BE AGREED BETWEEN CONTRACTOR AND LANDOWNERS.
3. THE CONTRACTOR SHALL BE SOLELY AND COMPLETELY RESPONSIBLE FOR FURNISHING, INSTALLING, AND MAINTAINING ALL WARNING SIGNS, DEVICES, AND FEATURES NECESSARY TO PROTECT THE HEALTH AND SAFETY OF THE GENERAL PUBLIC AND WORKERS, AND TO PROVIDE FOR THE PROPER AND SAFE ROUTING OF VEHICULAR AND PEDESTRIAN TRAFFIC DURING THE PERFORMANCE OF THE WORK.
4. THE CONTRACTOR SHALL BE RESPONSIBLE FOR COMPLIANCE WITH ALL APPLICABLE FEDERAL, STATE AND LOCAL LAWS, RULES AND REGULATIONS.
5. THE CONTRACTOR SHALL COMPLY WITH THE PROVISIONS OF CONTRA COSTA COUNTY ORDINANCE CODE, SECTION _____, AND THE STATE NPDES CONSTRUCTION ACTIVITY GENERAL PERMIT, INCLUDING PROVIDING EROSION AND SEDIMENT CONTROL IN ACCORDANCE WITH CONTRACTOR'S APPROVED STORMWATER POLLUTION PREVENTION PLAN.
6. THE CONTRACTOR SHALL VERIFY ALL DIMENSIONS, SIZES AND LOCATIONS OF ALL EXISTING FACILITIES AND FEATURES BEFORE STARTING WORK AND SHALL IMMEDIATELY NOTIFY THE ENGINEER OF ANY DISCREPANCIES.
7. PRIOR TO COMMENCING CONSTRUCTION, THE ACTUAL LOCATIONS AND ELEVATIONS OF EXISTING UTILITIES SHALL BE VERIFIED BY THE CONTRACTOR. ALL EXISTING UNDERGROUND AND OVERHEAD UTILITIES TO REMAIN SHALL BE PROTECTED FROM CONSTRUCTION EQUIPMENT AND OPERATIONS. THE CONTRACTOR SHALL CONTACT ALL UTILITY COMPANIES WHO ARE INVOLVED WITH THIS PROJECT AND REQUEST TO HAVE ALL UNDERGROUND UTILITIES THAT MAY POSSIBLY CONFLICT WITH THE WORK OR ACCESS TO THE WORK LOCATED IN THE FIELD. THE CONTRACTOR OR ANY SUBCONTRACTOR IS REQUIRED TO NOTIFY THE UNDERGROUND SERVICE ALERT 48 HOURS IN ADVANCE OF PERFORMING ANY EXCAVATION BY CALLING (800) 642-2444.

* PROJECT HORIZONTAL CONTROL			
PT. ID	NORTHING	EASTING	DESCRIPTION
CC-1	2168975.99	6194424.01	DEER VALLEY RD. IP WITH TAG DV13
CC-2	2166809.40	6194399.78	DEER VALLEY RD. IP WITH TAG DV14
CC-20	2168529.24	6195722.93	5/8" REBAR
CC-21	2168701.45	6195726.89	5/8" REBAR
CC-26	2168282.91	6196517.11	5/8" REBAR SOUTHEAST CORNER PARCEL "B" 116 PM 2
CC-27	2168512.95	6196521.76	5/8" REBAR NORTHEAST CORNER PARCEL "B" 116 PM 2

* PROJECT VERTICAL CONTROL
PROJECT BASIS OF ELEVATION IS NATIONAL GEODETIC VERTICAL DATUM OF 1929 (NGVD29) HOLDING C.C.CO. BM #3064, A BRASS DISK SET IN CONCRETE POST 1.9 MILES ON DEER VALLEY ROAD FROM INTERSECTION OF LONE TREE WAY 20' WEST OF CL OF ROAD AND 1' EAST OF FENCE 1-1/2' NORTH OF 4X4 POST
ELEVATION = 199.842 FT. NGVD 29

* SEE SURVEY NOTE 2

DRAFT - 90% REVIEW

G-3

REVISIONS			
NO.	DESCRIPTION	BY	DATE

DES.:	D.W.
DRAWN:	P.Y.M.
CHKD.:	K.V.S.
DATE:	08-16-10
SCALE:	NOTED
FLD. BK.	xxxx

REGISTERED PROFESSIONAL ENGINEER — ALBERTO PUCK-HUB — No. 37051 — EXP — CIVIL — STATE OF CALIFORNIA

PROJECT ENGINEER

PLANS APPROVAL DATE

GEI Consultants

CONTRA COSTA COUNTY
PUBLIC WORKS DEPARTMENT
255 GLACIER DRIVE
MARTINEZ, CALIFORNIA 94553

SCALE, NONE

FOR REDUCED PLANS ORIGINAL SCALE IS IN INCHES
0 1 2 3

BASE MAP	EAST COORD.	NORTH COORD.
L23	1635	528

UPPER SAND CREEK DETENTION BASIN

SURVEY CONTROL SYSTEM & GENERAL NOTES

FILE NO. FD-3210

SHEET XX OF YY

CADD FILE# G-3.dwg

PEN TBL. GEIWALKER.ctb

G-3 08-13-10 PYM

BASEMAP REFERENCE

BASEMAP DEVELOPED FROM PLAN SHEET C-1 TITLED, "UPPER SAND CREEK DETENTION BASIN, SITE PLAN," PREPARED BY GEI CONSULTANTS, DATED 3 AUGUST 2010, FILE NO. FD-3210. PREVIOUS EXPLORATION LOCATIONS DEVELOPED FROM REPORT TITLED, "GEOTECHNICAL STUDY, UPPER SAND CREEK DETENTION BASIN," PREPARED BY FUGRO WEST, DATED JUNE 2004.

LEGEND

- APPROXIMATE LOCATION OF TEST BORING (FUGRO, 2004)
- APPROXIMATE LOCATION OF CONE PENETROMETER TEST (FUGRO, 2004)
- APPROXIMATE LOCATION OF TEST PIT (FUGRO, 2000)
- APPROXIMATE LOCATION OF ROCK CORE (WLA, 2004)
- APPROXIMATE LOCATION OF TEST TRENCH (WLA, 2004)
- 78 PRIMARY JOINT SET STRIKE AND DIP (WLA, 2004)
- 10 BEDDING STRIKE AND DIP MEASURED AT SURFACE OR IN TRENCH (WLA, 2004)
- 20' 15 BEDDING STRIKE AND DIP TAKEN IN EXPLORATORY EXC OR AT SURFACE (CE&G, 2009)
- APPROXIMATE LOCATION OF TEST BORING (CE&G, 2009)
- APPROXIMATE LOCATION OF TEST PIT (CE&G, 2009)
- APPROXIMATE LOCATION OF TEST TRENCH (CE&G, 2009)
- GEOLOGIC CROSS SECTION
- 15 STRIKE AND DIP OF SLIDE PLANE
- 58 STRIKE AND DIP OF FAULT PLANE
- Qls LANDSLIDE FEATURE (ARROW INDICATES DIRECTION OF MOVEMENT
- GEOLOGIC CONTACT
- 140 APPROX BEDROCK ELEVATION

LEGEND

- Qaf ARTIFICIAL FILL
- Qc COLLUVIUM
- Qls LANDSLIDE DEBRIS
- Qal ALLUVIAL STREAM DEPOSIT
- Qt1 YOUNGER TERRACE DEPOSIT
- Qt2 OLDER TERRACE DEPOSIT
- Tmk MARKLEY FORMATION (SILTSTONE, SANDSTONE MEMBERS)
- Tmk OUTCROP FEATURE

SPILLWAY C/L, APPROX LOCATION
SPILLWAY CREST
SAND CREEK
OUTLET STRUCTURE
OUTLET PIPE
INLET STRUCTURE
MAIN DAM
APPROX LOCATION OF FORMER A-P ZONE
TRACE OF ANTIOCH FAULT (FER-226, WILLS 1991)
APPROX MAPPED TRACE OF ANTIOCH FAULT BY CRANE 1993
PARCEL BOUNDARY
LOCALLY STEEPEN TO 2:1 TO STAY WITHIN PROJECT LIMITS
Tmk (SOIL AND Qc COVER)

F1 MAPPED BY CE&G N17W 58W. REVERSE; WEST SIDE OVER EAST SIDE ABOUT 12 INCHES.

F2 MAPPED BY CE&G N27E 86W. NORMAL; WEST SIDE DOWN ABOUT 18 INCHES.

DRAFT - 90% REVIEW

S-1

REVISIONS			
NO.	DESCRIPTION	BY	DATE

DES.: S. WATRY
DRAWN: C. HOCKETT
CHKD.: P. GREGORY
DATE: 08-16-10
SCALE: 1" = 100'
FLD. BK. xxxx

REGISTERED PROFESSIONAL ENGINEER PHILLIP O. GREGORY No. Geo GE 2193 No. Civil C 45728 Exp. 3/31/11 CIVIL - GEOTECHNICAL STATE OF CALIFORNIA

PROJECT ENGINEER

PLANS APPROVAL DATE

CE&G
CAL ENGINEERING & GEOLOGY

CONTRA COSTA COUNTY
PUBLIC WORKS DEPARTMENT
255 GLACIER DRIVE
MARTINEZ, CALIFORNIA 94553

0 100 200
SCALE, FEET

FOR REDUCED PLANS ORIGINAL SCALE IS IN INCHES
0 1 2 3

BASE MAP	EAST COORD.	NORTH COORD.
L23	1635	528

UPPER SAND CREEK DETENTION BASIN

GEOLOGIC PLAN AND EXPLORATION LOCATIONS

FILE NO. FD-3210

SHEET XX OF YY

S-1 08-16-10 CAH

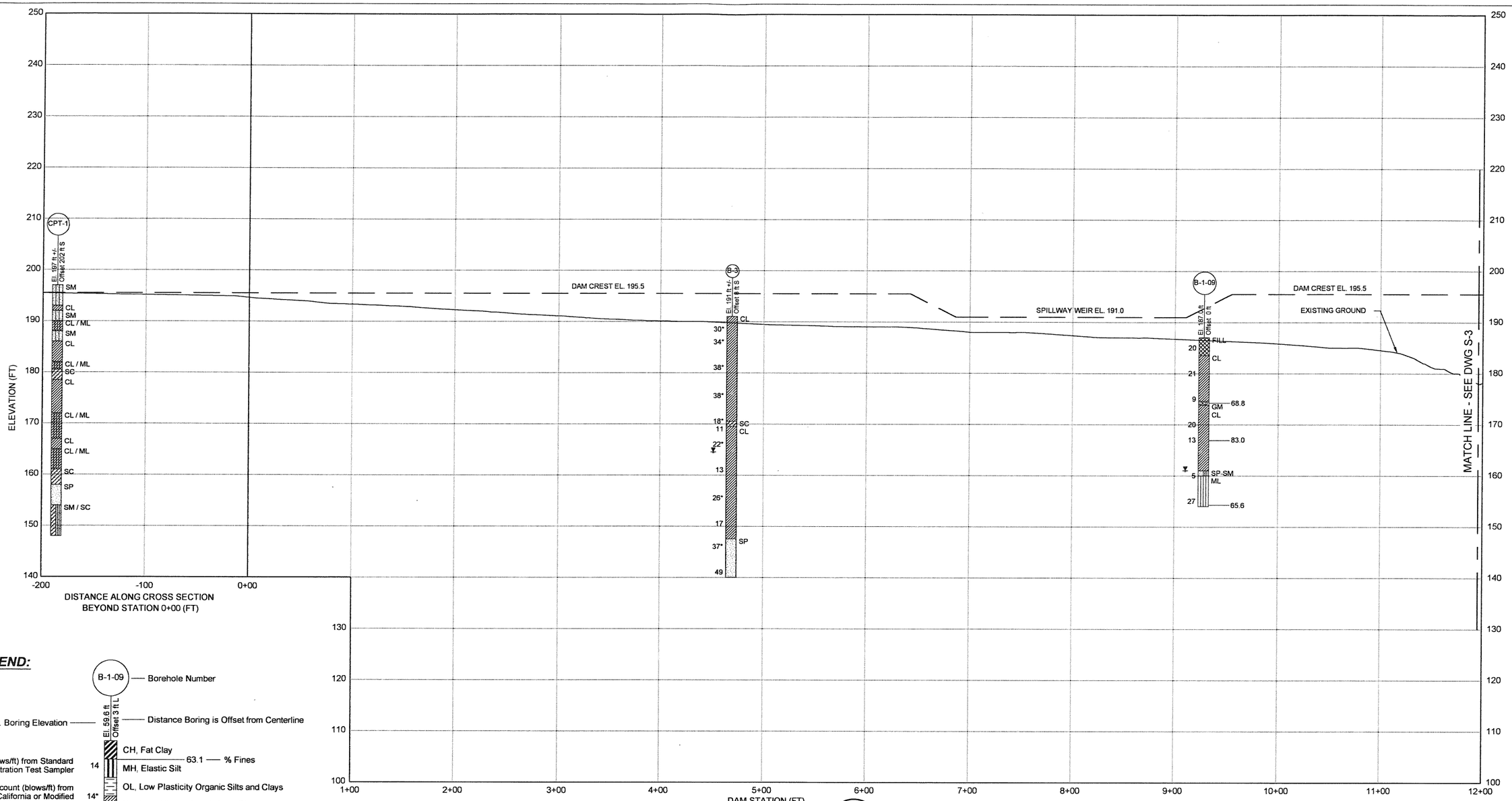

SECTION A (1 of 2) / S-1

LEGEND:

- B-1-09 — Borehole Number
- Approx. Boring Elevation — El. 59.6 ft. Offset 3 ft L — Distance Boring is Offset from Centerline
- CH, Fat Clay
- Blowcount (blows/ft) from Standard Penetration Test Sampler: 14 — 63.1 — % Fines
- MH, Elastic Silt
- Blowcount (blows/ft) from California or Modified California Sampler: 14*
- OL, Low Plasticity Organic Silts and Clays
- CL, Lean Clay or Sandy Lean Clay
- Represents refusal of the sampler: REF
- ML, Silt or Sandy Silt
- SC, Clayey SAND
- Water Level Reading at time of drilling.
- SM, Silty Sand, Silty Sand with Gravel
- Water Level Reading after drilling.
- SP, Poorly Graded Sand, Poorly Graded Sand with Gravel
- SW, Well Graded Sand, Well Graded Sand with Gravel
- Weight of Hammer: WOH
- GC, Clayey Gravel
- GM, Silty Gravel, Silty Gravel with Sand
- GP, Poorly Graded Gravel, Poorly Graded Gravel with Sand
- GW, Well Graded Gravel, Well Graded Gravel with Sand

NOTES:

1. BLOW COUNTS ON CE&G BORINGS (B-1-09 ETC.) ARE CORRECTED BASED ON TABER DRILLING ENERGY CALIBRATION IN ACCORDANCE WITH DWR AUGUST 2008 MANUAL.
2. BLOW COUNTS ON HISTORIC BORINGS (B-# AND C-#) ARE UNCORRECTED.
3. OFFSET DISTANCES SHOWN FOR EACH BORING REPRESENT THE PERPENDICULAR DISTANCE OF THE BORING TO THE SECTION LINE. OFFSET BORINGS ARE PROJECTED HORIZONTALLY (MAINTAINING ELEVATION).
4. LOGS SHOWN REPRESENT SUMMARIZED AND GENERALIZED SUBSURFACE CONDITIONS. REFER TO BORING LOGS FOR SPECIFIC SUBSURFACE CONDITIONS.
5. SUBSURFACE CONDITIONS SHOWN REPRESENT OBSERVATIONS AT THE SPECIFIC BORING LOCATIONS AT THE TIME THE EXPLORATIONS WERE COMPLETED. SUBSURFACE CONDITIONS BETWEEN BORING LOCATIONS AND SAMPLES ARE UNKNOWN. GROUNDWATER LEVELS ARE LIKELY TO VARY WITH TIME.

DRAFT - 90% REVIEW

S-2

S-2 08-16-10 D.DeCesaris

REVISIONS			
NO.	DESCRIPTION	BY	DATE

DES.:	DD
DRAWN:	DD
CHKD.:	JN
DATE:	08-16-10
SCALE:	VARIES
FLD. BK.	xxxx

REGISTERED PROFESSIONAL ENGINEER — ALBERTO PUJOL-RIUS — No. 37051 — EXP — CIVIL — STATE OF CALIFORNIA

PROJECT ENGINEER

PLANS APPROVAL DATE

GEI Consultants

CONTRA COSTA COUNTY
PUBLIC WORKS DEPARTMENT
255 GLACIER DRIVE
MARTINEZ, CALIFORNIA 94553

VERTICAL SCALE, FEET: 0 10 20

HORIZONTAL SCALE, FEET: 0 50 100

FOR REDUCED PLANS ORIGINAL SCALE IS IN INCHES: 0 1 2 3

BASE MAP	EAST COORD.	NORTH COORD.
L23	1635	528

UPPER SAND CREEK DETENTION BASIN

GEOLOGIC PROFILE ALONG DAM AXIS (1 OF 2)

FILE NO. FD-3210

SHEET XX OF YY

CADD FILE# S-2.dwg

PEN TBL: GEI Boston Standard 2009.ctb

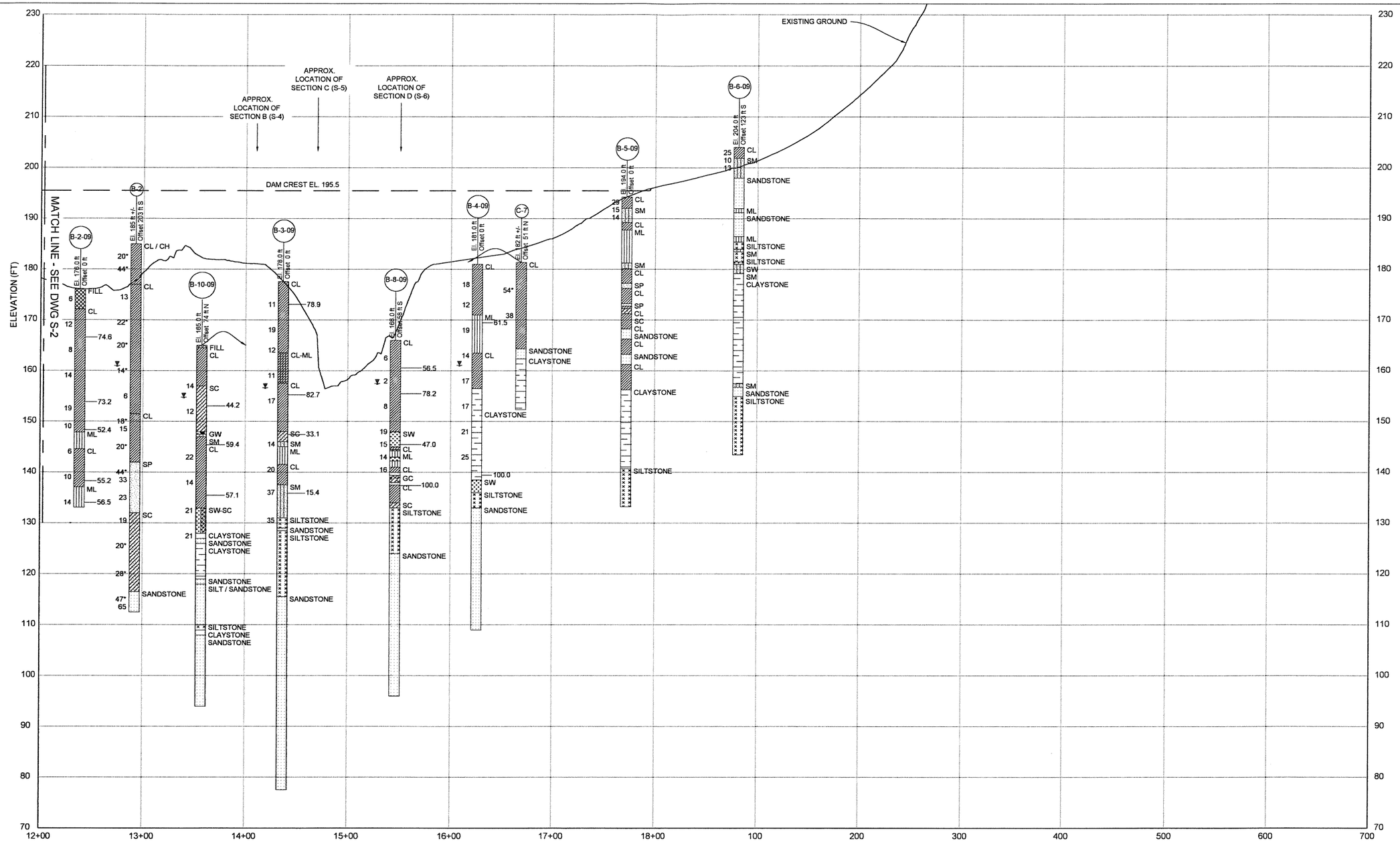

NOTES:

1. BLOW COUNTS ON CE&G BORINGS (B-1-09 ETC.) ARE CORRECTED BASED ON TABER DRILLING ENERGY CALIBRATION IN ACCORDANCE WITH DWR AUGUST 2008 MANUAL.
2. BLOW COUNTS ON HISTORIC BORINGS (B-# AND C-#) ARE UNCORRECTED.
3. OFFSET DISTANCES SHOWN FOR EACH BORING REPRESENT THE PERPENDICULAR DISTANCE OF THE BORING TO THE SECTION LINE. OFFSET BORINGS ARE PROJECTED HORIZONTALLY (MAINTAINING ELEVATION).
4. LOGS SHOWN REPRESENT SUMMARIZED AND GENERALIZED SUBSURFACE CONDITIONS. REFER TO BORING LOGS FOR SPECIFIC SUBSURFACE CONDITIONS.
5. SUBSURFACE CONDITIONS SHOWN REPRESENT OBSERVATIONS AT THE SPECIFIC BORING LOCATIONS AT THE TIME THE EXPLORATIONS WERE COMPLETED. SUBSURFACE CONDITIONS BETWEEN BORING LOCATIONS AND SAMPLES ARE UNKNOWN. GROUNDWATER LEVELS ARE LIKELY TO VARY WITH TIME.

SECTION A (2 of 2) / S-1

LEGEND:

SEE DRAWING S-2.

DRAFT - 90% REVIEW

S-3

REVISIONS			
NO.	DESCRIPTION	BY	DATE

DES.:	DD
DRAWN:	DD
CHKD.:	JN
DATE:	08-16-10
SCALE:	VARIES
FLD. BK.	xxxx

REGISTERED PROFESSIONAL ENGINEER ALBERTO PULIDO-LUNA No 37051 EXP. CIVIL STATE OF CALIFORNIA

PROJECT ENGINEER

PLANS APPROVAL DATE

GEI Consultants

CONTRA COSTA COUNTY
PUBLIC WORKS DEPARTMENT
255 GLACIER DRIVE
MARTINEZ, CALIFORNIA 94553

0 10 20 VERTICAL SCALE, FEET

0 50 100 HORIZONTAL SCALE, FEET

FOR REDUCED PLANS ORIGINAL SCALE IS IN INCHES 0 1 2 3

BASE MAP	EAST COORD.	NORTH COORD.
L23	1635	528

UPPER SAND CREEK DETENTION BASIN

GEOLOGIC PROFILE ALONG DAM AXIS (2 OF 2)

FILE NO. FD-3210

SHEET XX OF YY

CADD FILE# S-3.dwg

PEN TBL: GEI Boston Standard 2009.ctb

S-3 08-16-10 D.DeCesaris

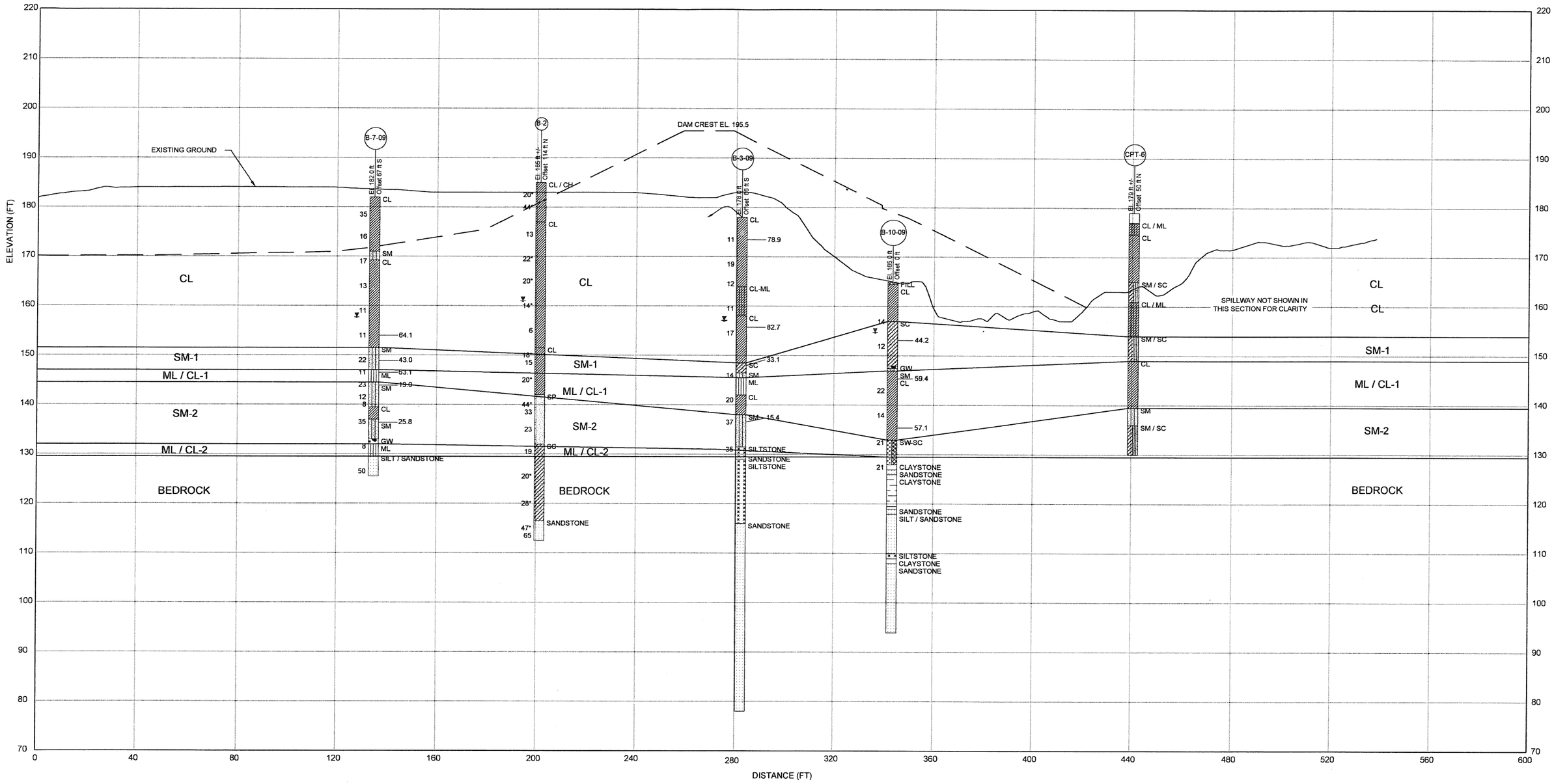

NOTES:

1. BLOW COUNTS ON CE&G BORINGS (B-1-09 ETC.) ARE CORRECTED BASED ON TABER DRILLING ENERGY CALIBRATION IN ACCORDANCE WITH DWR AUGUST 2008 MANUAL.
2. BLOW COUNTS ON HISTORIC BORINGS (B-# AND C-#) ARE UNCORRECTED.
3. OFFSET DISTANCES SHOWN FOR EACH BORING REPRESENT THE PERPENDICULAR DISTANCE OF THE BORING TO THE SECTION LINE. OFFSET BORINGS ARE PROJECTED HORIZONTALLY (MAINTAINING ELEVATION).
4. LOGS SHOWN REPRESENT SUMMARIZED AND GENERALIZED SUBSURFACE CONDITIONS. REFER TO BORING LOGS FOR SPECIFIC SUBSURFACE CONDITIONS.
5. SUBSURFACE CONDITIONS SHOWN REPRESENT OBSERVATIONS AT THE SPECIFIC BORING LOCATIONS AT THE TIME THE EXPLORATIONS WERE COMPLETED. SUBSURFACE CONDITIONS BETWEEN BORING LOCATIONS AND SAMPLES ARE UNKNOWN. GROUNDWATER LEVELS ARE LIKELY TO VARY WITH TIME.

SECTION B / S-1
STATION 14+05

LEGEND:

SEE DRAWING S-2.

DRAFT - 90% REVIEW

S-4

REVISIONS			
NO.	DESCRIPTION	BY	DATE

DES.:	DD
DRAWN:	DD
CHKD.:	JN
DATE:	08-16-10
SCALE:	VARIES
FLD. BK.	xxxx

REGISTERED PROFESSIONAL ENGINEER ALBERTO PUJOL-YUN No. 37051 EXP. CIVIL STATE OF CALIFORNIA

PROJECT ENGINEER

PLANS APPROVAL DATE

GEI Consultants

CONTRA COSTA COUNTY
PUBLIC WORKS DEPARTMENT
255 GLACIER DRIVE
MARTINEZ, CALIFORNIA 94553

0 10 20
VERTICAL SCALE, FEET
0 20 40
HORIZONTAL SCALE, FEET

FOR REDUCED PLANS ORIGINAL SCALE IS IN INCHES
0 1 2 3

BASE MAP	EAST COORD.	NORTH COORD.
L23	1635	528

UPPER SAND CREEK DETENTION BASIN

GEOLOGIC SECTIONS (1 OF 7)

FILE NO. FD-3210

SHEET XX OF YY

CADD FILE# S-4.dwg

PEN TBL: GEI Boston Standard 2009.ctb

S-4 08-16-10 D.DeCesaris

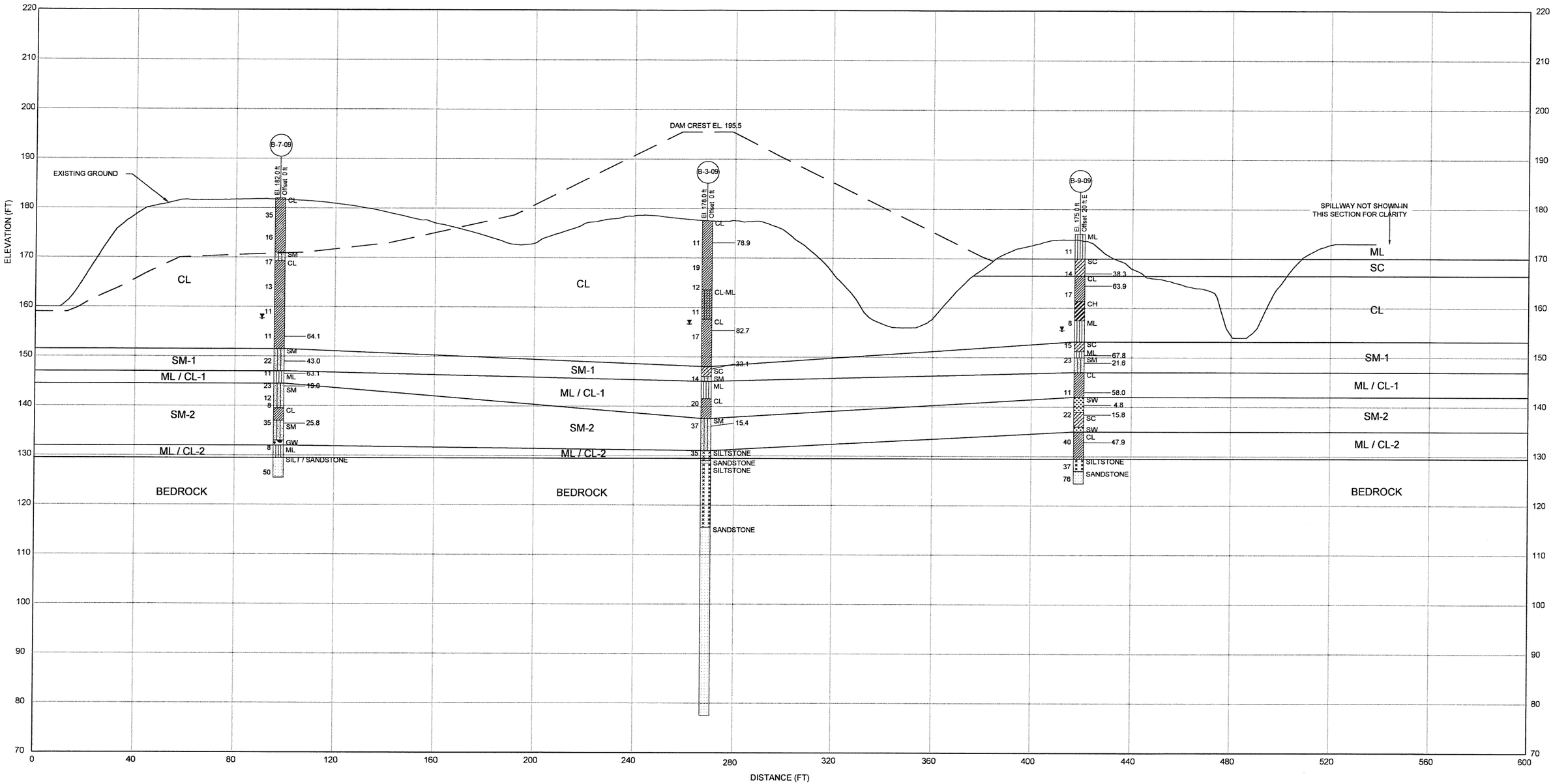

NOTES:

1. BLOW COUNTS ON CE&G BORINGS (B-1-09 ETC.) ARE CORRECTED BASED ON TABER DRILLING ENERGY CALIBRATION IN ACCORDANCE WITH DWR AUGUST 2008 MANUAL.
2. BLOW COUNTS ON HISTORIC BORINGS (B-# AND C-#) ARE UNCORRECTED.
3. OFFSET DISTANCES SHOWN FOR EACH BORING REPRESENT THE PERPENDICULAR DISTANCE OF THE BORING TO THE SECTION LINE. OFFSET BORINGS ARE PROJECTED HORIZONTALLY (MAINTAINING ELEVATION).
4. LOGS SHOWN REPRESENT SUMMARIZED AND GENERALIZED SUBSURFACE CONDITIONS. REFER TO BORING LOGS FOR SPECIFIC SUBSURFACE CONDITIONS.
5. SUBSURFACE CONDITIONS SHOWN REPRESENT OBSERVATIONS AT THE SPECIFIC BORING LOCATIONS AT THE TIME THE EXPLORATIONS WERE COMPLETED. SUBSURFACE CONDITIONS BETWEEN BORING LOCATIONS AND SAMPLES ARE UNKNOWN. GROUNDWATER LEVELS ARE LIKELY TO VARY WITH TIME.

SECTION C
STATION 14+70 S-1

LEGEND:

SEE DRAWING S-2.

DRAFT - 90% REVIEW

S-5

REVISIONS			
NO.	DESCRIPTION	BY	DATE

S-5 08-16-10 D.DeCesaris

DES.: DD
DRAWN: DD
CHKD.: JN
DATE: 08-16-10
SCALE: VARIES
FLD. BK. xxxx

REGISTERED PROFESSIONAL ENGINEER ALBERTO PUJOL-RIS No. 37051 EXP CIVIL STATE OF CALIFORNIA

PROJECT ENGINEER

PLANS APPROVAL DATE

GEI Consultants

CONTRA COSTA COUNTY
PUBLIC WORKS DEPARTMENT
255 GLACIER DRIVE
MARTINEZ, CALIFORNIA 94553

0 10 20
VERTICAL SCALE, FEET
0 20 40
HORIZONTAL SCALE, FEET

FOR REDUCED PLANS
ORIGINAL SCALE IS IN INCHES
0 1 2 3

BASE MAP	EAST COORD.	NORTH COORD.
L23	1635	528

UPPER SAND CREEK DETENTION BASIN

GEOLOGIC SECTIONS (2 OF 7)

FILE NO. FD-3210

SHEET XX OF YY

CADD FILE# S-5.dwg

PEN TBL. GEI Boston Standard 2009.ctb

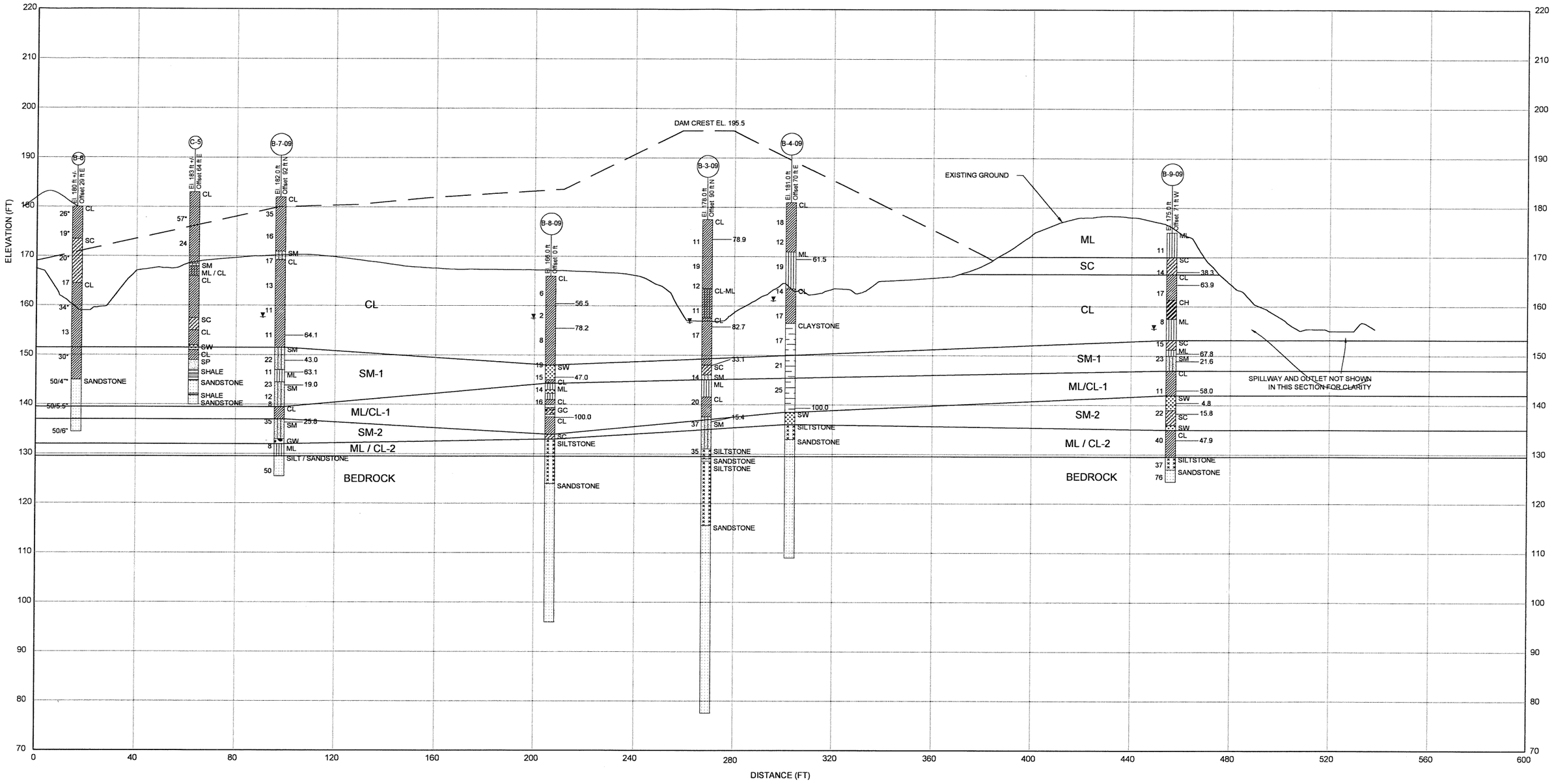

NOTES:

1. BLOW COUNTS ON CE&G BORINGS (B-1-09 ETC.) ARE CORRECTED BASED ON TABER DRILLING ENERGY CALIBRATION IN ACCORDANCE WITH DWR AUGUST 2008 MANUAL.
2. BLOW COUNTS ON HISTORIC BORINGS (B-# AND C-#) ARE UNCORRECTED.
3. OFFSET DISTANCES SHOWN FOR EACH BORING REPRESENT THE PERPENDICULAR DISTANCE OF THE BORING TO THE SECTION LINE. OFFSET BORINGS ARE PROJECTED HORIZONTALLY (MAINTAINING ELEVATION).
4. LOGS SHOWN REPRESENT SUMMARIZED AND GENERALIZED SUBSURFACE CONDITIONS. REFER TO BORING LOGS FOR SPECIFIC SUBSURFACE CONDITIONS.
5. SUBSURFACE CONDITIONS SHOWN REPRESENT OBSERVATIONS AT THE SPECIFIC BORING LOCATIONS AT THE TIME THE EXPLORATIONS WERE COMPLETED. SUBSURFACE CONDITIONS BETWEEN BORING LOCATIONS AND SAMPLES ARE UNKNOWN. GROUNDWATER LEVELS ARE LIKELY TO VARY WITH TIME.

SECTION D / STATION 15+55 / S-1

LEGEND:

SEE DRAWING S-2.

DRAFT - 90% REVIEW

S-6

REVISIONS			
NO.	DESCRIPTION	BY	DATE

DES.:	DD
DRAWN:	DD
CHKD.:	JN
DATE:	08-16-10
SCALE:	VARIES
FLD. BK.	xxxx

REGISTERED PROFESSIONAL ENGINEER ALBERTO PUCCIARELLI No. 37051 EXP CIVIL STATE OF CALIFORNIA

PROJECT ENGINEER

PLANS APPROVAL DATE

GEI Consultants

CONTRA COSTA COUNTY
PUBLIC WORKS DEPARTMENT
255 GLACIER DRIVE
MARTINEZ, CALIFORNIA 94553

0 10 20 VERTICAL SCALE, FEET

0 20 40 HORIZONTAL SCALE, FEET

FOR REDUCED PLANS ORIGINAL SCALE IS IN INCHES 0 1 2 3

BASE MAP	EAST COORD.	NORTH COORD.
L23	1635	528

UPPER SAND CREEK DETENTION BASIN

GEOLOGIC SECTIONS (3 OF 7)

FILE NO. FD-3210

SHEET XX OF YY

CADD FILE# S-6.dwg

PEN TBL: GEI Boston Standard 2009.ctb

S-6 08-16-10 D.DeCesaris

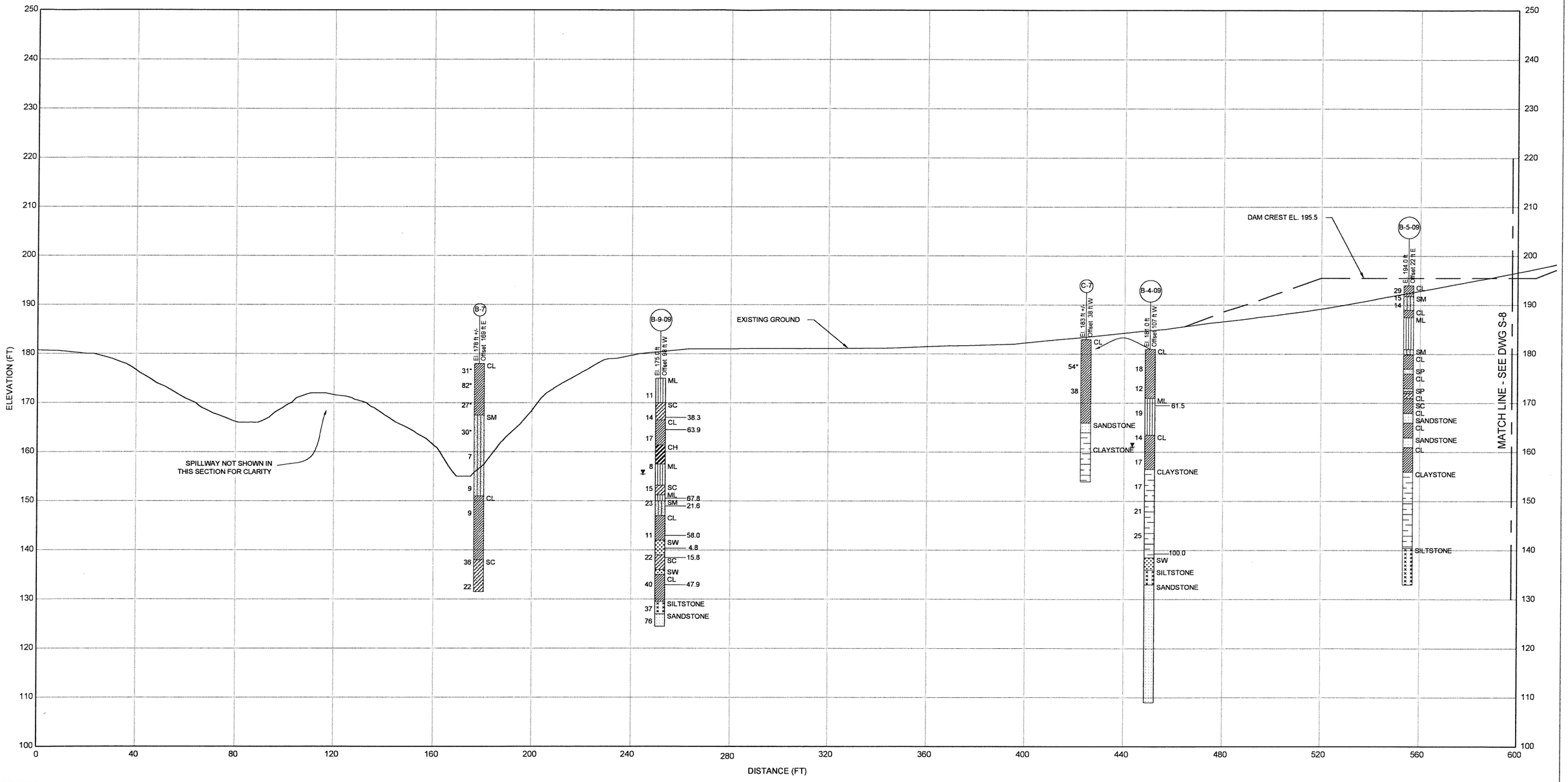

NOTES:

1. BLOW COUNTS ON CE&G BORINGS (B-1-09 ETC.) ARE CORRECTED BASED ON TABER DRILLING ENERGY CALIBRATION IN ACCORDANCE WITH DWR AUGUST 2008 MANUAL.
2. BLOW COUNTS ON HISTORIC BORINGS (B-# AND C-#) ARE UNCORRECTED.
3. OFFSET DISTANCES SHOWN FOR EACH BORING REPRESENT THE PERPENDICULAR DISTANCE OF THE BORING TO THE SECTION LINE. OFFSET BORINGS ARE PROJECTED HORIZONTALLY (MAINTAINING ELEVATION).
4. LOGS SHOWN REPRESENT SUMMARIZED AND GENERALIZED SUBSURFACE CONDITIONS. REFER TO BORING LOGS FOR SPECIFIC SUBSURFACE CONDITIONS.
5. SUBSURFACE CONDITIONS SHOWN REPRESENT OBSERVATIONS AT THE SPECIFIC BORING LOCATIONS AT THE TIME THE EXPLORATIONS WERE COMPLETED. SUBSURFACE CONDITIONS BETWEEN BORING LOCATIONS AND SAMPLES ARE UNKNOWN. GROUNDWATER LEVELS ARE LIKELY TO VARY WITH TIME.

SECTION E (1 of 2) / S-1

LEGEND:

SEE DRAWING S-2.

DRAFT - 90% REVIEW

S-7

REVISIONS			
NO.	DESCRIPTION	BY	DATE

DES.:	DD
DRAWN:	DD
CHKD.:	JN
DATE:	08-16-10
SCALE:	VARIES
FLD. BK.	xxxx

REGISTERED PROFESSIONAL ENGINEER ALBERTO PUGA-TITO No. 37051 EXP. CIVIL STATE OF CALIFORNIA

PROJECT ENGINEER

PLANS APPROVAL DATE

GEI Consultants

CONTRA COSTA COUNTY
PUBLIC WORKS DEPARTMENT
255 GLACIER DRIVE
MARTINEZ, CALIFORNIA 94553

0 10 20 VERTICAL SCALE, FEET

0 20 40 HORIZONTAL SCALE, FEET

FOR REDUCED PLANS ORIGINAL SCALE IS IN INCHES
0 1 2 3

BASE MAP	EAST COORD.	NORTH COORD.
L23	1635	528

UPPER SAND CREEK DETENTION BASIN

GEOLOGIC SECTIONS (4 OF 7)

FILE NO. FD-3210

SHEET XX OF YY

CADD FILE# S-7.dwg

PEN TBL: GEI Boston Standard 2009.ctb

S-7 08-16-10 D.DeCesaris

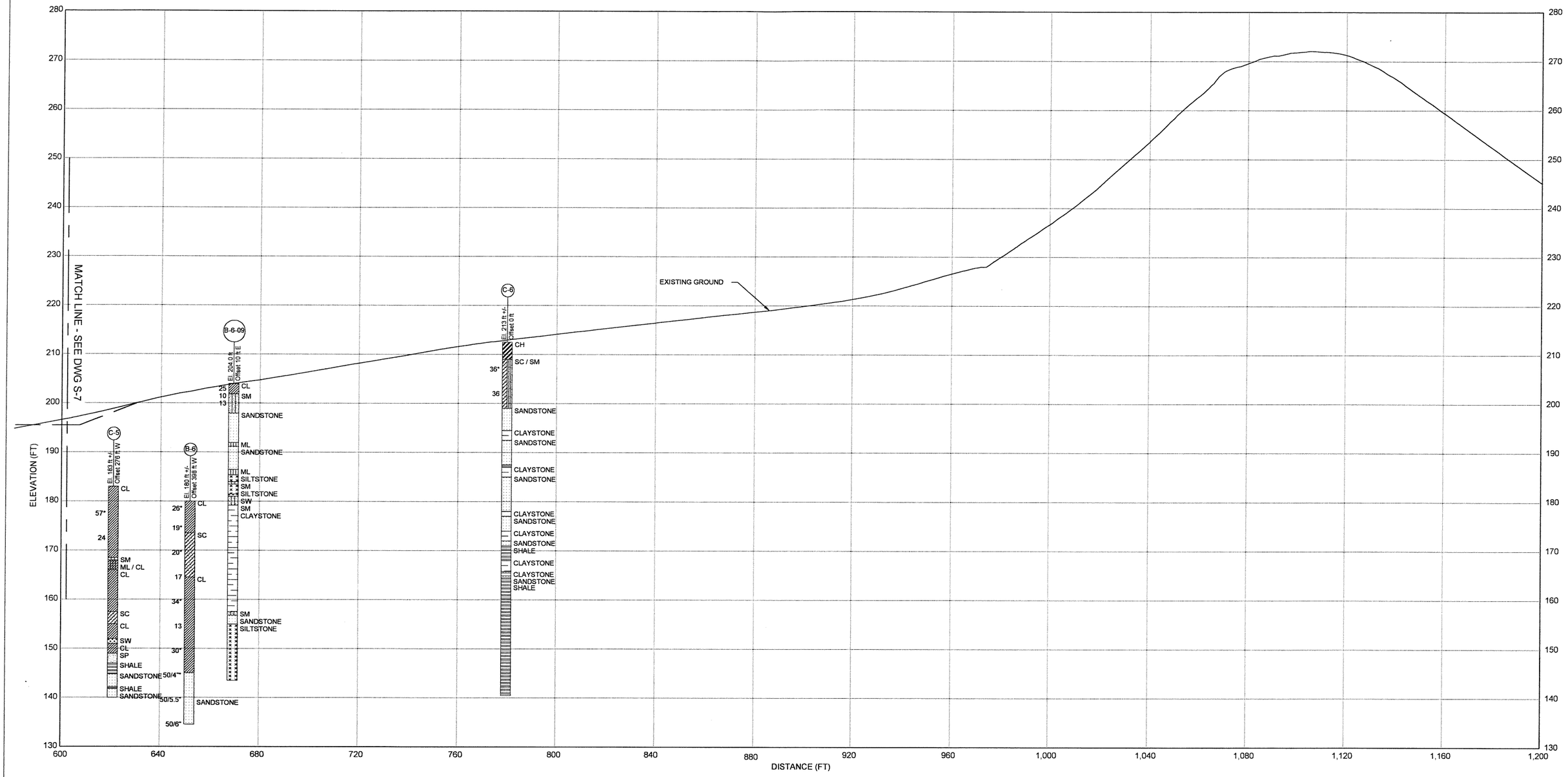

NOTES:

1. BLOW COUNTS ON CE&G BORINGS (B-1-09 ETC.) ARE CORRECTED BASED ON TABER DRILLING ENERGY CALIBRATION IN ACCORDANCE WITH DWR AUGUST 2008 MANUAL.
2. BLOW COUNTS ON HISTORIC BORINGS (B-# AND C-#) ARE UNCORRECTED.
3. OFFSET DISTANCES SHOWN FOR EACH BORING REPRESENT THE PERPENDICULAR DISTANCE OF THE BORING TO THE SECTION LINE. OFFSET BORINGS ARE PROJECTED HORIZONTALLY (MAINTAINING ELEVATION).
4. LOGS SHOWN REPRESENT SUMMARIZED AND GENERALIZED SUBSURFACE CONDITIONS. REFER TO BORING LOGS FOR SPECIFIC SUBSURFACE CONDITIONS.
5. SUBSURFACE CONDITIONS SHOWN REPRESENT OBSERVATIONS AT THE SPECIFIC BORING LOCATIONS AT THE TIME THE EXPLORATIONS WERE COMPLETED. SUBSURFACE CONDITIONS BETWEEN BORING LOCATIONS AND SAMPLES ARE UNKNOWN. GROUNDWATER LEVELS ARE LIKELY TO VARY WITH TIME.

SECTION E (2 of 2) / S-1

LEGEND:

SEE DRAWING S-2.

DRAFT - 90% REVIEW

S-8

REVISIONS			
NO.	DESCRIPTION	BY	DATE

DES.:	DD
DRAWN:	DD
CHKD.:	JN
DATE:	08-16-10
SCALE:	VARIES
FLD. BK.	XXXX

REGISTERED PROFESSIONAL ENGINEER ALBERTO PUJOL-ROS No. 37051 EXP CIVIL STATE OF CALIFORNIA

PROJECT ENGINEER

PLANS APPROVAL DATE

GEI Consultants

CONTRA COSTA COUNTY
PUBLIC WORKS DEPARTMENT
255 GLACIER DRIVE
MARTINEZ, CALIFORNIA 94553

0 10 20 VERTICAL SCALE, FEET

0 20 40 HORIZONTAL SCALE, FEET

FOR REDUCED PLANS ORIGINAL SCALE IS IN INCHES
0 1 2 3

BASE MAP	EAST COORD.	NORTH COORD.
L23	1635	528

UPPER SAND CREEK DETENTION BASIN

GEOLOGIC SECTIONS (5 OF 7)

FILE NO. FD-3210

SHEET XX OF YY

CADD FILE# S-8.dwg

PEN TBL: GEI Boston Standard 2009.ctb

S-8 08-16-10 D.DeCesaris

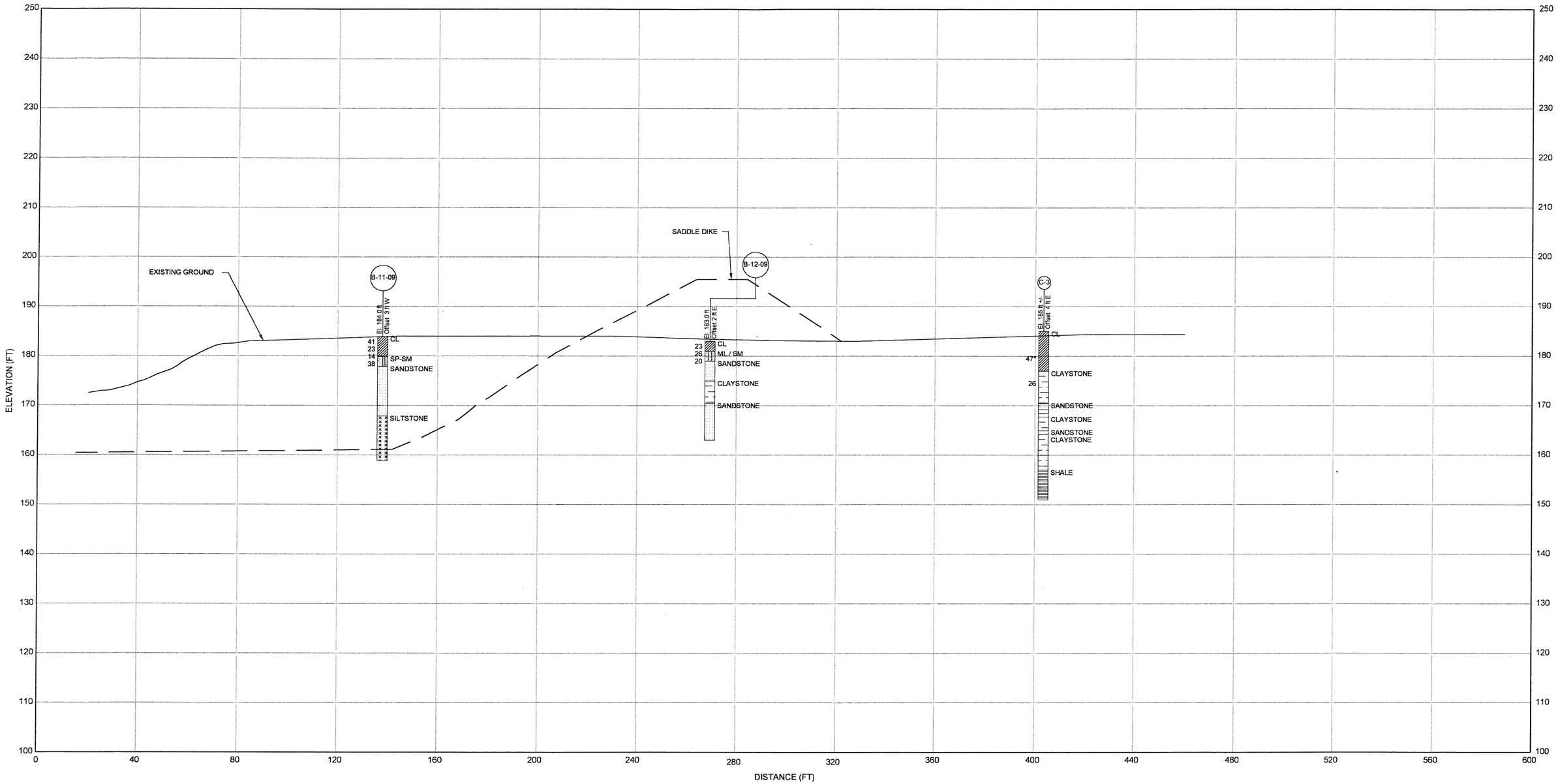

NOTES:

1. BLOW COUNTS ON CE&G BORINGS (B-1-09 ETC.) ARE CORRECTED BASED ON TABER DRILLING ENERGY CALIBRATION IN ACCORDANCE WITH DWR AUGUST 2008 MANUAL.
2. BLOW COUNTS ON HISTORIC BORINGS (B-# AND C-#) ARE UNCORRECTED.
3. OFFSET DISTANCES SHOWN FOR EACH BORING REPRESENT THE PERPENDICULAR DISTANCE OF THE BORING TO THE SECTION LINE. OFFSET BORINGS ARE PROJECTED HORIZONTALLY (MAINTAINING ELEVATION).
4. LOGS SHOWN REPRESENT SUMMARIZED AND GENERALIZED SUBSURFACE CONDITIONS. REFER TO BORING LOGS FOR SPECIFIC SUBSURFACE CONDITIONS.
5. SUBSURFACE CONDITIONS SHOWN REPRESENT OBSERVATIONS AT THE SPECIFIC BORING LOCATIONS AT THE TIME THE EXPLORATIONS WERE COMPLETED. SUBSURFACE CONDITIONS BETWEEN BORING LOCATIONS AND SAMPLES ARE UNKNOWN. GROUNDWATER LEVELS ARE LIKELY TO VARY WITH TIME.

SECTION F
STATION 28+50 S-1

LEGEND:

SEE DRAWING S-2.

DRAFT - 90% REVIEW

S-9

D.DaCesaris
S-9 08-18-10

REVISIONS			
NO.	DESCRIPTION	BY	DATE

DES.: DD
DRAWN: DD
CHKD.: JN
DATE: 08-16-10
SCALE: VARIES
FLD. BK. xxxx

REGISTERED PROFESSIONAL ENGINEER ALBERTO PUIG-RIUS No. 37051 EXP CIVIL STATE OF CALIFORNIA

PROJECT ENGINEER

PLANS APPROVAL DATE

GEI Consultants

CONTRA COSTA COUNTY
PUBLIC WORKS DEPARTMENT
255 GLACIER DRIVE
MARTINEZ, CALIFORNIA 94553

0 10 20
VERTICAL SCALE, FEET
0 20 40
HORIZONTAL SCALE, FEET

FOR REDUCED PLANS
ORIGINAL SCALE IS IN INCHES
0 1 2 3

BASE MAP	EAST COORD.	NORTH COORD.
L23	1635	528

UPPER SAND CREEK DETENTION BASIN

GEOLOGIC SECTIONS (6 OF 7)

FILE NO. FD-3210

SHEET XX OF YY

CADD FILE# S-9.dwg

PEN TBL. GEI Boston Standard 2009.ctb

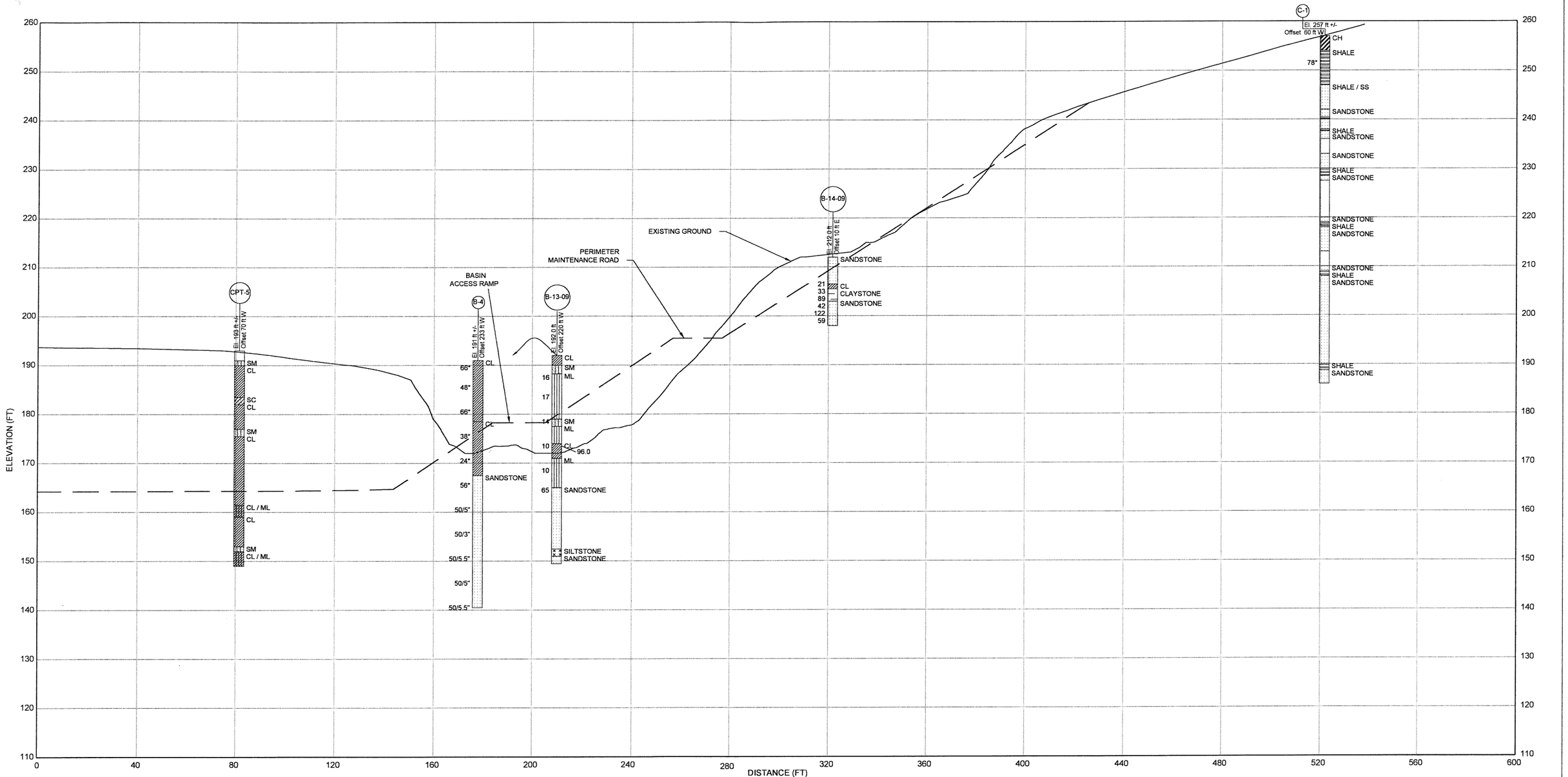

NOTES:

1. BLOW COUNTS ON CE&G BORINGS (B-1-09 ETC.) ARE CORRECTED BASED ON TABER DRILLING ENERGY CALIBRATION IN ACCORDANCE WITH DWR AUGUST 2008 MANUAL.
2. BLOW COUNTS ON HISTORIC BORINGS (B-# AND C-#) ARE UNCORRECTED.
3. OFFSET DISTANCES SHOWN FOR EACH BORING REPRESENT THE PERPENDICULAR DISTANCE OF THE BORING TO THE SECTION LINE. OFFSET BORINGS ARE PROJECTED HORIZONTALLY (MAINTAINING ELEVATION).
4. LOGS SHOWN REPRESENT SUMMARIZED AND GENERALIZED SUBSURFACE CONDITIONS. REFER TO BORING LOGS FOR SPECIFIC SUBSURFACE CONDITIONS.
5. SUBSURFACE CONDITIONS SHOWN REPRESENT OBSERVATIONS AT THE SPECIFIC BORING LOCATIONS AT THE TIME THE EXPLORATIONS WERE COMPLETED. SUBSURFACE CONDITIONS BETWEEN BORING LOCATIONS AND SAMPLES ARE UNKNOWN. GROUNDWATER LEVELS ARE LIKELY TO VARY WITH TIME.

SECTION G
STATION 39+10 S-1

LEGEND:

SEE DRAWING S-2.

DRAFT - 90% REVIEW

S-10

D.DeCesaris
S-10 08-16-10

REVISIONS			
NO.	DESCRIPTION	BY	DATE

DES.: DD
DRAWN: DD
CHKD.: JN
DATE: 08-16-10
SCALE: VARIES
FLD. BK. xxxx

REGISTERED PROFESSIONAL ENGINEER ALBERTO PUJOL-BOU No. 37051 EXP CIVIL STATE OF CALIFORNIA

PROJECT ENGINEER

PLANS APPROVAL DATE

GEI Consultants

CONTRA COSTA COUNTY
PUBLIC WORKS DEPARTMENT
255 GLACIER DRIVE
MARTINEZ, CALIFORNIA 94553

0 10 20
VERTICAL SCALE, FEET
0 20 40
HORIZONTAL SCALE, FEET

FOR REDUCED PLANS
ORIGINAL SCALE IS IN INCHES
0 1 2 3

BASE MAP	EAST COORD.	NORTH COORD.
L23	1635	528

UPPER SAND CREEK DETENTION BASIN

GEOLOGIC SECTIONS (7 OF 7)

FILE NO. FD-3210
SHEET XX OF YY
CADD FILE# S-10.dwg
PEN TBL: GEI Boston Standard 2009.ctb

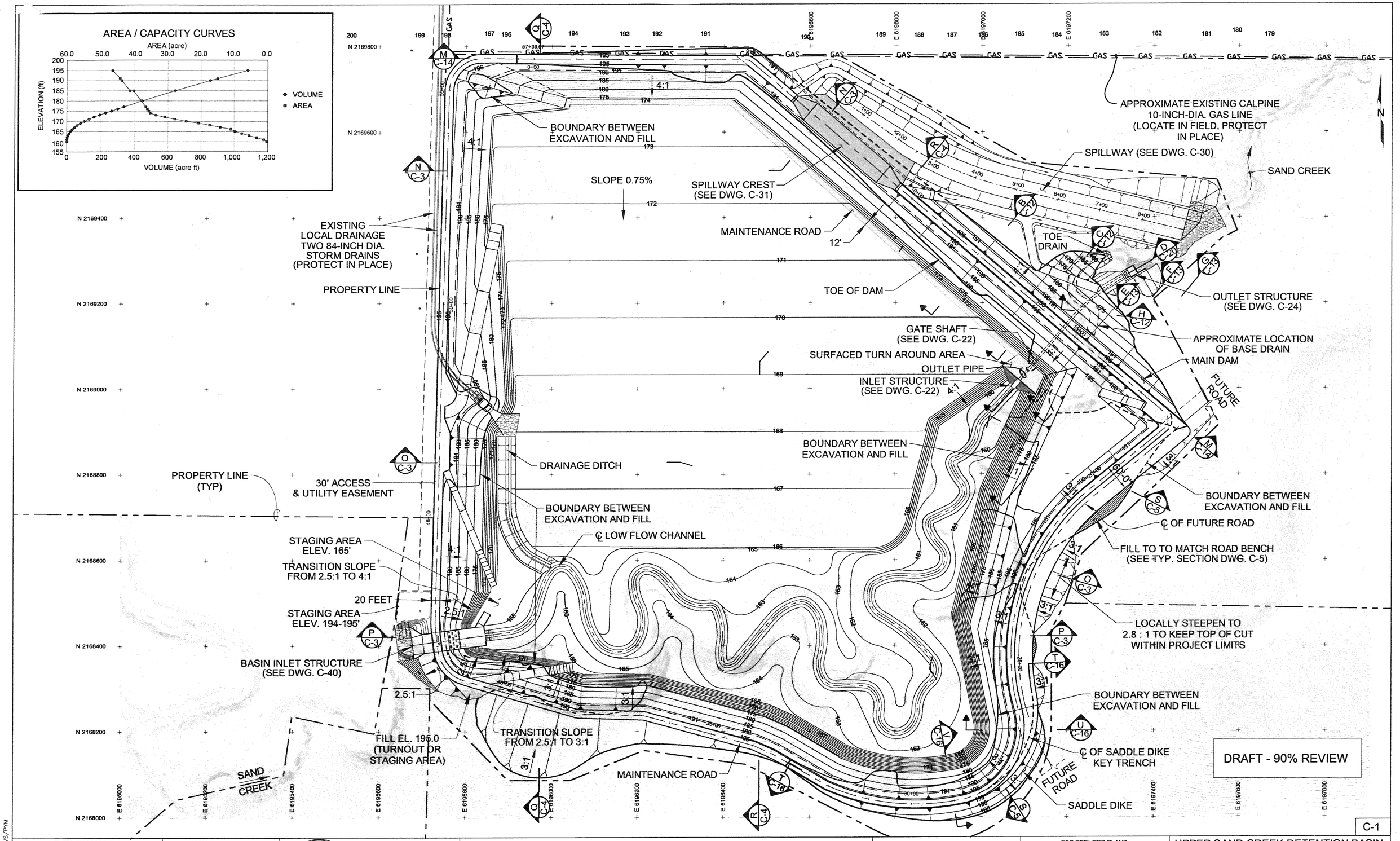

REVISIONS			
NO.	DESCRIPTION	BY	DATE

DES.: K.V.S.
DRAWN: P.Y.M.
CHKD.: A.T.
DATE: 08-16-10
SCALE: 1" = 100'
FLD. BK. xxxx

REGISTERED PROFESSIONAL ENGINEER ALBERTO PUJOL-RIUS No. 37051 EXP. CIVIL STATE OF CALIFORNIA

PROJECT ENGINEER

PLANS APPROVAL DATE

GEI Consultants

CONTRA COSTA COUNTY
PUBLIC WORKS DEPARTMENT
255 GLACIER DRIVE
MARTINEZ, CALIFORNIA 94553

0 100 200
SCALE, FEET

FOR REDUCED PLANS ORIGINAL SCALE IS IN INCHES
0 1 2 3

BASE MAP	EAST COORD.	NORTH COORD.
L23	1635	528

UPPER SAND CREEK DETENTION BASIN

BASIN SITE PLAN

FILE NO. FD-3210

SHEET XX OF YY

C-1 08-16-10 KVS/PYM

MAINTENANCE ROAD CORRIDOR CENTER LINE					
POINT #	NORTHING	EASTING	STATION	BASIN SIDE ROAD HINGE ELEVATION	DITCH INVERT ELEVATION
35	2169771.09	6195956.84	0+00	195.6	NO DITCH
36	2169767.79	6196449.99	4+93.16	195.6	NO DITCH
37	2169763.00	6196462.85	5+07.17	195.6	NO DITCH
38	2168942.54	6197423.43	17+70.44	196.0	NO DITCH
39	2168904.24	6197423.10	18+14.08	196.0	195.0
40	2168762.06	6197250.61	20+37.62	196.0	NOTE 1
41	-	-	20+50.00	196.0	192.7
42	-	-	22+50.00	196.0	194.7
43	-	-	24+50.00	196.0	192.7
44	2168295.14	6197076.02	25+59.63	196.0	NOTE 1
45	2168283.92	6197078.09	25+71.05	196.0	NOTE 1
46	2168244.78	6197087.28	26+11.25	195.9	193.5
47	2168039.34	6196952.35	28+85.97	195.9	NO DITCH
48	2168072.35	6196641.96	32+02.90	195.9	NO DITCH
49	2168073.45	6196640.02	32+05.13	195.9	NO DITCH
50	2168104.99	6196585.87	32+67.81	195.9	NO DITCH
51	2168124.26	6196552.91	33+05.98	195.9	195.5
52	2168144.67	6196516.74	33+47.51	NOTE 2	NOTE 1
53	2168145.43	6196515.25	33+49.19	NOTE 2	NOTE 1
54	2168164.71	6196473.24	33+95.41	NOTE 2	NOTE 1
55	2168165.80	6196470.23	33+98.61	NOTE 2	NOTE 1
56	2168229.71	6196239.34	36+38.19	NOTE 2	NOTE 1
57	2168235.51	6196218.30	36+60.01	NOTE 2	NOTE 1
58	2168236.22	6196213.59	36+64.79	NOTE 2	NOTE 1
59	2168240.78	6196063.72	38+14.72	NOTE 2	NOTE 1
60	2168241.69	6196058.36	38+20.18	NOTE 2	NOTE 1
61	2168243.06	6196053.95	38+24.80	194.5	193.0
62	2168305.21	6195842.99	40+44.72	195.0	194.1
63	2168319.03	6195797.26	40+92.50	195.0	NO DITCH
64	2168387.54	6195737.78	41+88.19	195.0	NO DITCH
65	2168437.16	6195731.64	42+38.19	195.0	NO DITCH
66	2168451.79	6195730.93	42+52.84	195.0	NO DITCH
67	2168529.25	6195732.82	43+30.33	195.0	194.1
68	-	-	44+30.00	195.0	194.6
69	2168741.52	6195738.02	45+42.66	195.0	NOTE 1
70	-	-	46+50.00	195.0	193.5
71	-	-	47+50.00	195.0	194.0
72	-	-	48+75.00	195.0	193.4
73	2169276.57	6195750.95	50+77.87	195.5	NOTE 1
74	2169698.73	6195761.15	55+00.16	197.0	NOTE 1
75	-	-	55+25.00	197.0	196.6
76	2169771.92	6195836.66	56+16.68	197.0	NO DITCH
77	2169771.77	6195856.36	56+36.38	196.5	NO DITCH

BASIN			
POINT #	NORTHING	EASTING	ELEVATION
85	2169047.28	6197223.82	185.0
86	2168998.95	6197280.79	185.0
87	2168981.55	6197270.93	185.0
88	2168905.78	6197355.63	185.0
89	2168794.08	6197224.21	185.0
90	2168311.86	6197031.67	185.0
91	2168426.42	6197009.30	185.0
92	2168743.56	6197085.83	185.0
93	2168627.68	6196742.79	166.0
94	2168692.02	6196825.61	166.0
95	2168923.86	6196883.58	166.0
96	2169041.38	6197052.06	166.0
97	2168287.51	6197118.10	194.4
98	2168029.03	6196954.32	195.0

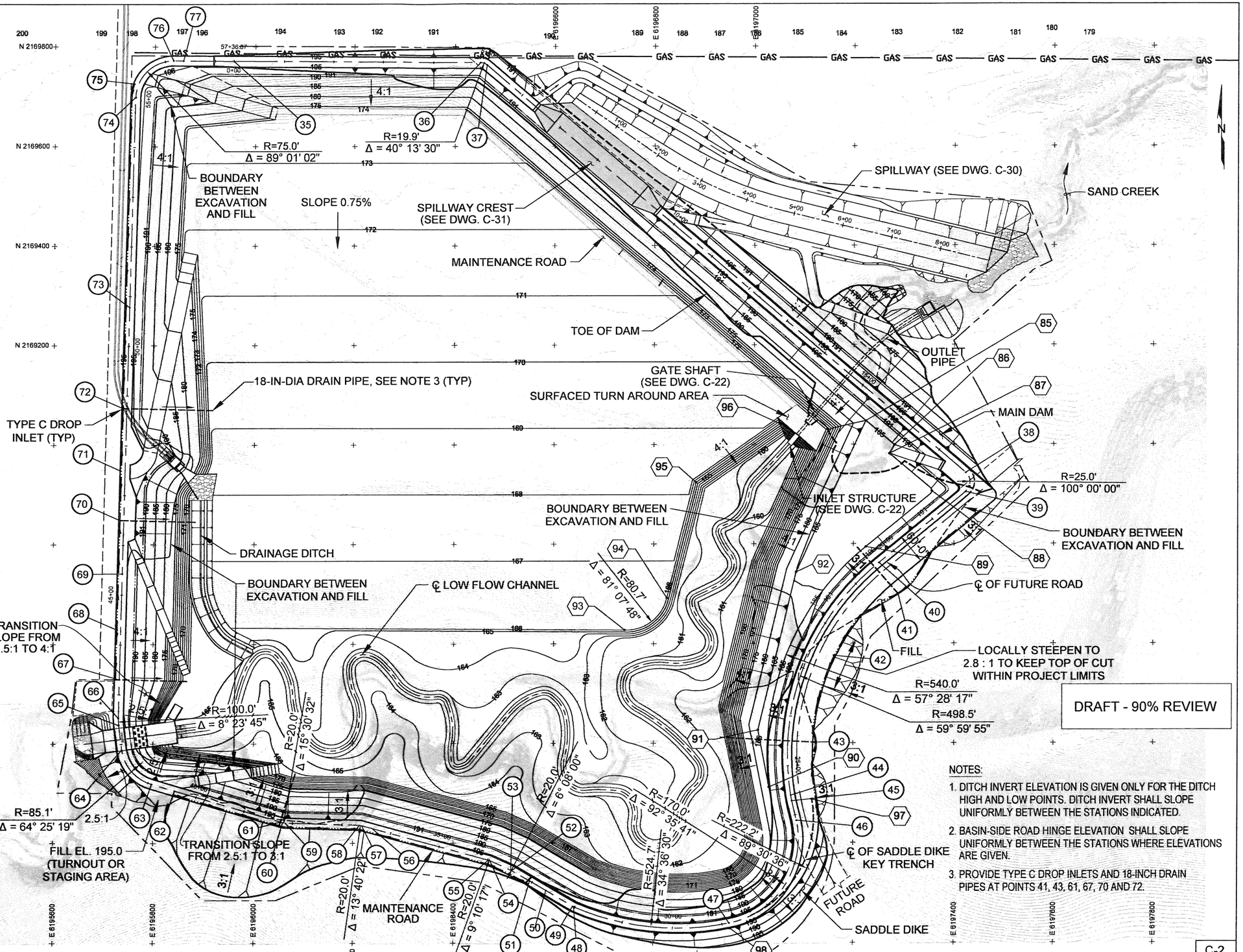

NOTES:

1. DITCH INVERT ELEVATION IS GIVEN ONLY FOR THE DITCH HIGH AND LOW POINTS. DITCH INVERT SHALL SLOPE UNIFORMLY BETWEEN THE STATIONS INDICATED.
2. BASIN-SIDE ROAD HINGE ELEVATION SHALL SLOPE UNIFORMLY BETWEEN THE STATIONS WHERE ELEVATIONS ARE GIVEN.
3. PROVIDE TYPE C DROP INLETS AND 18-INCH DRAIN PIPES AT POINTS 41, 43, 61, 67, 70 AND 72.

C-2

REVISIONS			
NO.	DESCRIPTION	BY	DATE

DES.:	K.V.S.
DRAWN:	P.Y.M.
CHKD.:	A.T.
DATE:	08-16-10
SCALE:	1" = 100'
FLD. BK.	XXXX

REGISTERED PROFESSIONAL ENGINEER — ALBERTO PUOL-RUIZ — No. 37051 — EXP — CIVIL — STATE OF CALIFORNIA

PROJECT ENGINEER

PLANS APPROVAL DATE

GEI Consultants

CONTRA COSTA COUNTY
PUBLIC WORKS DEPARTMENT
255 GLACIER DRIVE
MARTINEZ, CALIFORNIA 94553

0 100 200
SCALE, FEET

FOR REDUCED PLANS ORIGINAL SCALE IS IN INCHES
0 1 2 3

BASE MAP	EAST COORD.	NORTH COORD.
L23	1635	528

UPPER SAND CREEK DETENTION BASIN

BASIN GRADING PLAN

FILE NO. FD-3210

SHEET XX OF YY

CADD FILE# C-2.dwg

PEN TBL: GEIWALKER.ctb

C-2 08-16-10 PYM

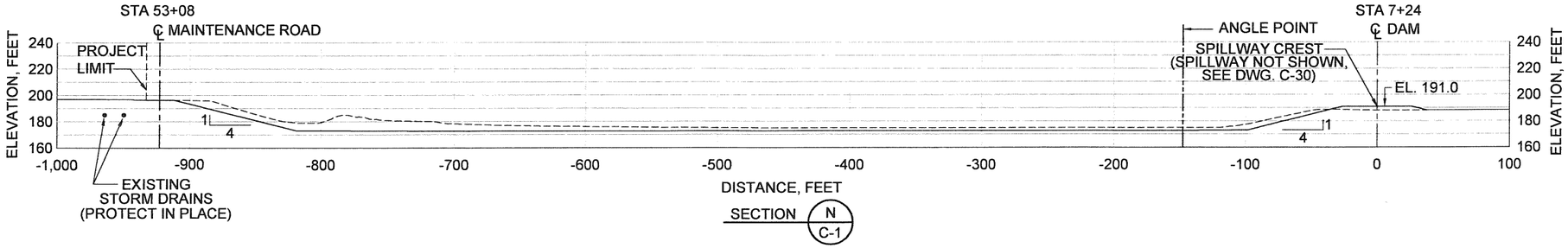

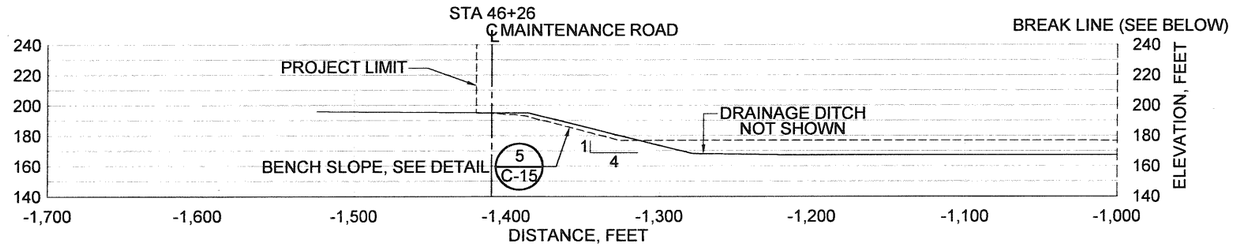

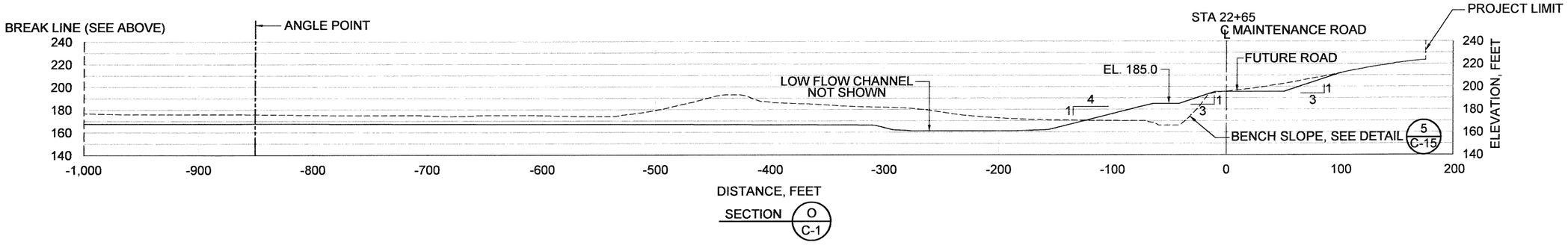

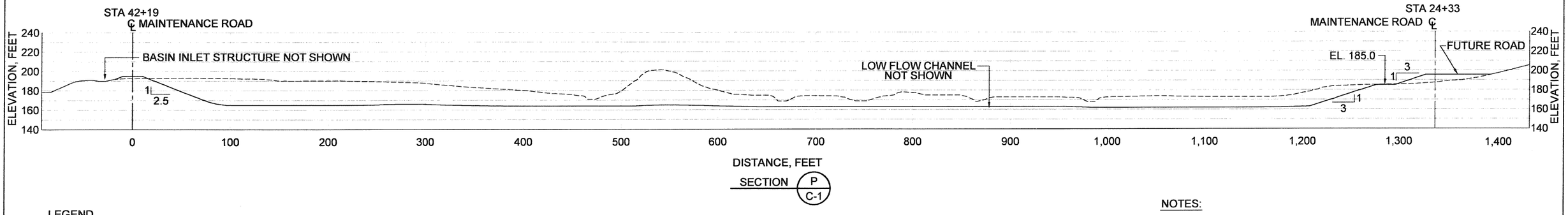

LEGEND

- FINISH GRADE (EMBANKMENT AND EXCAVATION)
- EXISTING GROUND TO REMAIN
- EXISTING GROUND TO BE EXCAVATED

DRAFT - 90% REVIEW

NOTES:

1. THE PURPOSE OF THE CROSS-SECTIONS IS TO ILLUSTRATE EXISTING GROUND LINE, BASIN EXCAVATION, AND CUT AND FILL SLOPES. CROSS-SECTIONS DO NOT SHOW DAM EMBANKMENT ZONING OR GRADING DETAILS.

C-3

REVISIONS			
NO.	DESCRIPTION	BY	DATE

C-3 08-16-10 KVS

DES.: K.V.S.
DRAWN: P.Y.M.
CHKD.: A.T.
DATE: 08-16-10
SCALE: 1" = 50'
FLD. BK. xxxx

REGISTERED PROFESSIONAL ENGINEER ALBERTO PUJOL JR. No. 37051 EXP CIVIL STATE OF CALIFORNIA

PROJECT ENGINEER

PLANS APPROVAL DATE

GEI Consultants

CONTRA COSTA COUNTY
PUBLIC WORKS DEPARTMENT
255 GLACIER DRIVE
MARTINEZ, CALIFORNIA 94553

0 50 100
SCALE, FEET

FOR REDUCED PLANS
ORIGINAL SCALE IS IN INCHES
0 1 2 3

BASE MAP	EAST COORD.	NORTH COORD.
L23	1635	528

UPPER SAND CREEK DETENTION BASIN

BASIN GRADING -
SECTIONS & DETAILS
(Sheet 1 of 3)

FILE NO. FD-3210

SHEET XX OF YY

CADD FILE# C-3.dwg

PEN TBL GEIWALKER.ctb

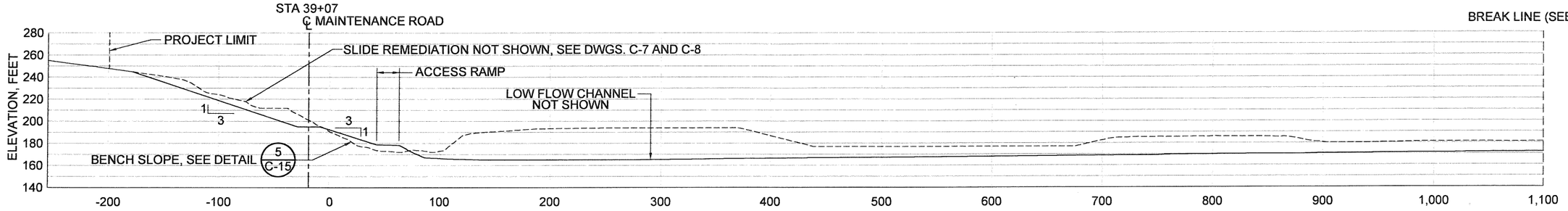

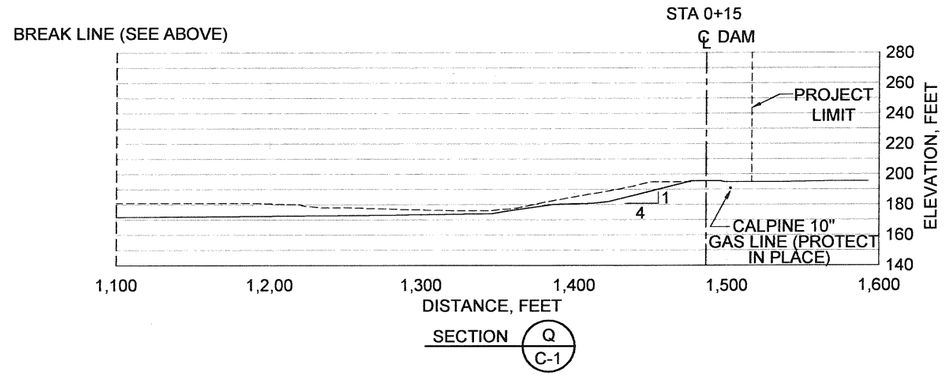

SECTION Q / C-1

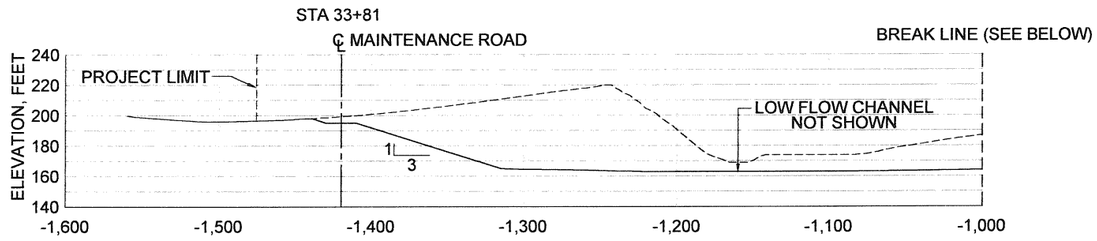

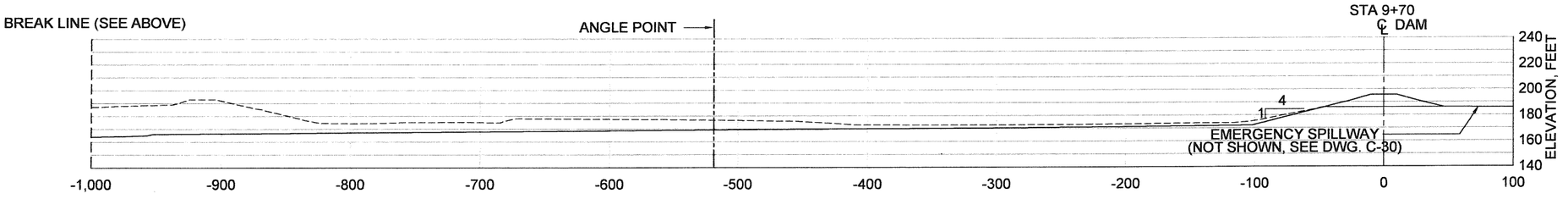

SECTION R / C-1

LEGEND

- FINISH GRADE (EMBANKMENT AND EXCAVATION)
- EXISTING GROUND TO REMAIN
- EXISTING GROUND TO BE EXCAVATED

DRAFT - 90% REVIEW

NOTES:

1. THE PURPOSE OF THE CROSS-SECTIONS IS TO ILLUSTRATE EXISTING GROUND LINE, BASIN EXCAVATION, AND CUT AND FILL SLOPES. CROSS-SECTIONS DO NOT SHOW DAM EMBANKMENT ZONING OR GRADING DETAILS.

C-4

REVISIONS			
NO.	DESCRIPTION	BY	DATE

DES.: K.V.S.
DRAWN: P.Y.M.
CHKD.: A.T.
DATE: 08-16-10
SCALE: 1" = 50'
FLD. BK. xxxx

REGISTERED PROFESSIONAL ENGINEER ALBERTO PUBLANO No. 37051 EXP CIVIL STATE OF CALIFORNIA

PROJECT ENGINEER

PLANS APPROVAL DATE

GEI Consultants

CONTRA COSTA COUNTY
PUBLIC WORKS DEPARTMENT
255 GLACIER DRIVE
MARTINEZ, CALIFORNIA 94553

0 50 100
SCALE, FEET

FOR REDUCED PLANS
ORIGINAL SCALE IS IN INCHES
0 1 2 3

BASE MAP	EAST COORD	NORTH COORD
L23	1635	528

UPPER SAND CREEK DETENTION BASIN
BASIN GRADING -
SECTIONS & DETAILS
(Sheet 2 of 3)

FILE NO FD-3210
SHEET XX OF YY
CADD FILE# C-4.dwg
PEN TBL. GEIWALKER.ctb

C-4 08-16-10 KVS

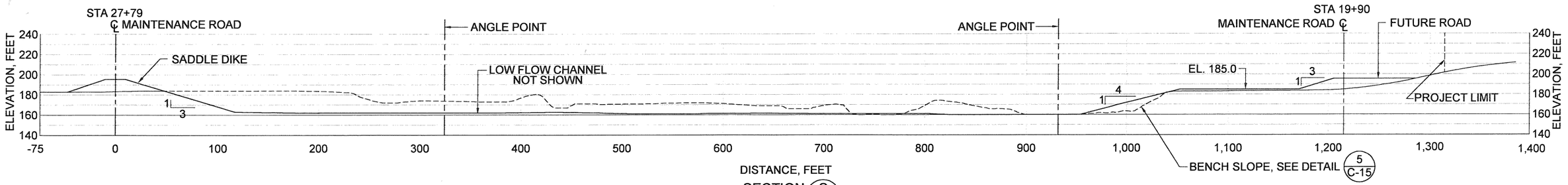

SECTION S/C-1

0 50 100

SCALE, FEET

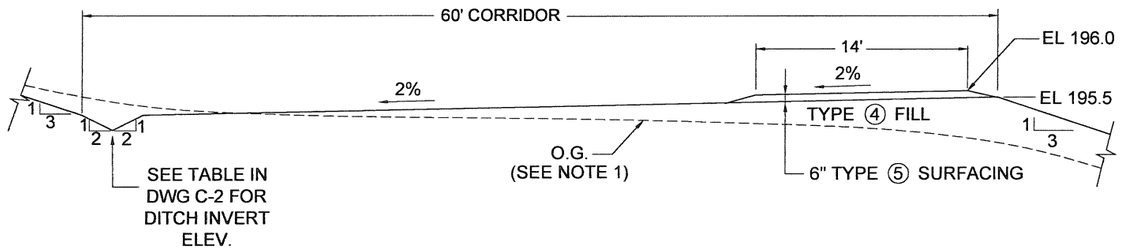

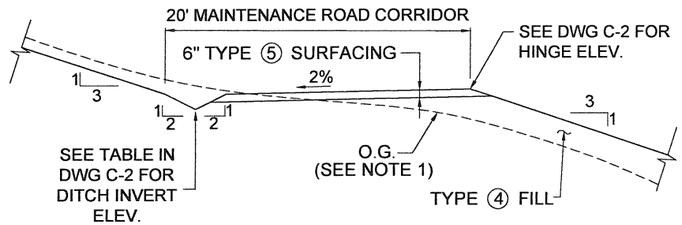

TYPICAL MAINTENANCE ROAD SECTION
STA 33+05 TO STA 40+45

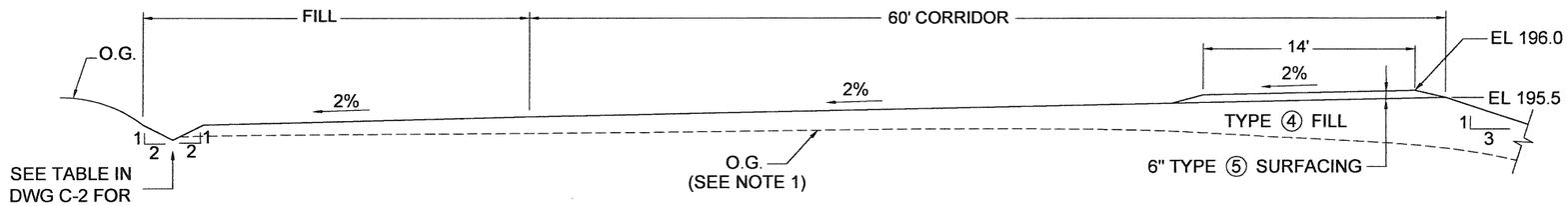

TYPICAL MAINTENANCE ROAD SECTIONS
STA 18+50 TO STA 26+11

0 5 10

SCALE, FEET

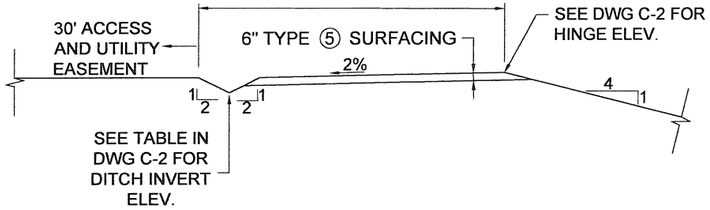

TYPICAL MAINTENANCE ROAD SECTION
STA 43+30 TO STA 55+25

RAMP TABLE			
PERIMETER ROAD STA.	RAMP WIDTH (FT)	APPROX. RAMP SLOPE (%)	AB SURFACING
40+50	20	10	YES
46+10	15	10	YES
47+50	28	5	YES
55+40	24	9	YES
6+30	15	VARIES *	NO
10+00	20	VARIES *	YES **
17+30	20	10	YES

* SEE DWG. C-30 & C-31

** BETWEEN DAM CREST AND PIPE OUTLET

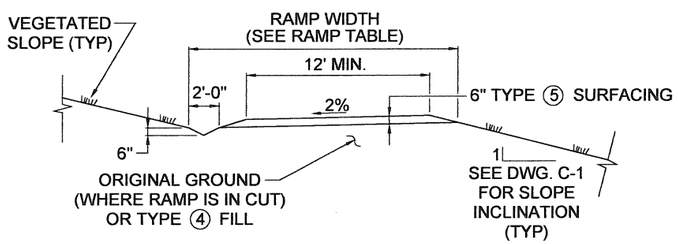

TYPICAL RAMP SECTION

0 5 10

SCALE, FEET

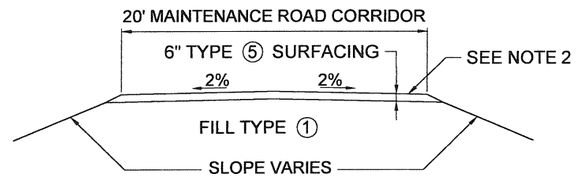

TYPICAL MAINTENANCE ROAD SECTION
STA 40+45 TO STA 41+70 AND STA 42+44 TO 43+30

0 5 10

SCALE, FEET

NOTES:

1. STRIP ORGANIC AND LOOSE SOILS DOWN TO COMPETENT MATERIAL UNDER ALL BASIN FILLS.
2. PROVIDE SMOOTH TRANSITIONS AT BRIDGE APPROACHES AND AT JUNCTIONS WITH OTHER ROAD SECTIONS.

DRAFT - 90% REVIEW

C-5

REVISIONS				DES.: K.V.S.	PROJECT ENGINEER	CONTRA COSTA COUNTY PUBLIC WORKS DEPARTMENT 255 GLACIER DRIVE MARTINEZ, CALIFORNIA 94553	SCALE AS INDICATED	FOR REDUCED PLANS ORIGINAL SCALE IS IN INCHES 0 1 2 3	UPPER SAND CREEK DETENTION BASIN
NO	DESCRIPTION	BY	DATE	DRAWN: P.Y.M.					BASIN GRADING - SECTIONS AND DETAILS (Sheet 3 of 3)
				CHKD.: A.T.	PLANS APPROVAL DATE			BASE MAP / EAST COORD. / NORTH COORD.	
				DATE: 08-16-10				L23 / 1635 / 528	FILE NO. FD-3210
				SCALE: AS INDICATED					SHEET XX OF YY
				FLD. BK. XXXX					CADD FILE# C-5.dwg PEN TBL: GEIWALKER.ctb

REGISTERED PROFESSIONAL ENGINEER ALBERTO PUJOL-RUIZ No. 37051 EXP C/V/L STATE OF CALIFORNIA

GEI Consultants

C-5 08-16-10 KVS

DRAINAGE DITCH ALIGNMENT			
POINT	NORTHING	EASTING	ELEVATION
160	2168889.36	6195893.47	163.3
161	2168739.36	6195893.47	162.8
162	2168643.48	6195917.94	162.5
163	2168580.26	6195998.28	162.1

LOW FLOW CHANNEL ALIGNMENT							
POINT	NORTHING	EASTING	ELEVATION	POINT	NORTHING	EASTING	ELEVATION
101	2168423.96	6195846.62	162.5	126	2168320.00	6196632.13	159.6
102	2168431.66	6195904.50	162.4	127	2168305.73	6196662.82	159.5
103	2168486.24	6195964.21	162.2	128	2168304.93	6196730.39	159.4
104	2168550.13	6195984.68	162.1	129	2168292.17	6196752.84	159.3
105	2168576.35	6196001.45	162.0	130	2168245.98	6196762.96	159.3
106	2168576.35	6196045.46	162.0	131	2168208.54	6196836.60	159.0
107	2168498.71	6196077.95	161.8	132	2168250.04	6196852.32	159.0
108	2168408.42	6196109.94	161.6	133	2168313.19	6196882.15	158.8
109	2168404.16	6196197.73	161.4	134	2168366.36	6196887.63	158.7
110	2168490.01	6196207.23	161.3	135	2168453.73	6196792.57	158.5
111	2168548.14	6196191.92	161.1	136	2168561.88	6196827.71	158.2
112	2168578.21	6196231.16	161.0	137	2168571.76	6196897.45	158.0
113	2168562.18	6196258.45	161.0	138	2168629.84	6196904.82	157.9
114	2168519.51	6196293.91	160.9	139	2168664.99	6196880.33	157.8
115	2168493.77	6196364.83	160.7	140	2168682.35	6196875.95	157.8
116	2168480.83	6196387.72	160.7	141	2168695.11	6196883.07	157.8
117	2168395.07	6196395.17	160.5	142	2168716.48	6196927.32	157.7
118	2168362.80	6196396.44	160.4	143	2168748.50	6196958.80	157.6
119	2168352.63	6196411.55	160.4	144	2168777.18	6196955.29	157.5
120	2168359.82	6196428.34	160.4	145	2168821.31	6196929.10	157.4
121	2168460.29	6196510.02	160.1	146	2168836.41	6196937.88	157.4
122	2168501.32	6196574.14	160.0	147	2168873.54	6196981.81	157.3
123	2168496.96	6196597.14	159.9	148	2168906.44	6196991.34	157.2
124	2168452.43	6196625.70	159.8	149	2168934.93	6197010.00	157.2
125	2168373.18	6196622.99	159.7	150	2169000.63	6197071.71	157.0

LOCATION OF LOCAL DRAINAGE TWO 84-INCH DIA. STORM DRAINS (SEE DWG. C-60)

DRAINAGE DITCH

LOW FLOW CHANNEL TYPICAL SECTION N.T.S.

℄ LOW FLOW CHANNEL

INLET STRUCTURE (SEE DWG. C-22)

MAINTENANCE ROAD

DRAFT - 90% REVIEW

C-6

REVISIONS			
NO.	DESCRIPTION	BY	DATE

DES.: K.V.S.
DRAWN: P.Y.M.
CHKD.: A.T.
DATE: 08-16-10
SCALE: 1" = 100'
FLD. BK. xxxx

REGISTERED PROFESSIONAL ENGINEER ALBERTO PUJOL-AYUSO No. 37051 EXP CIVIL STATE OF CALIFORNIA

PROJECT ENGINEER

PLANS APPROVAL DATE

GEI Consultants

CONTRA COSTA COUNTY
PUBLIC WORKS DEPARTMENT
255 GLACIER DRIVE
MARTINEZ, CALIFORNIA 94553

0 50 100
SCALE, FEET

FOR REDUCED PLANS ORIGINAL SCALE IS IN INCHES
0 1 2 3

BASE MAP	EAST COORD.	NORTH COORD.
L23	1635	528

UPPER SAND CREEK DETENTION BASIN

BASIN SITE PLAN - LOW FLOW CHANNEL ALIGNMENT

FILE NO. FD-3210

SHEET XX OF YY

CADD FILE# C-6.dwg

PEN TBL GEIWALKER.ctb

C-6 08-13-10 KVS/PYM

NOTES

1. LIMITS OF REMEDIAL GRADING ARE BASED ON ANTICIPATED REMAINING MARGIN OF LANDSLIDE AFTER BASIN GRADING HAS BEEN COMPLETED.

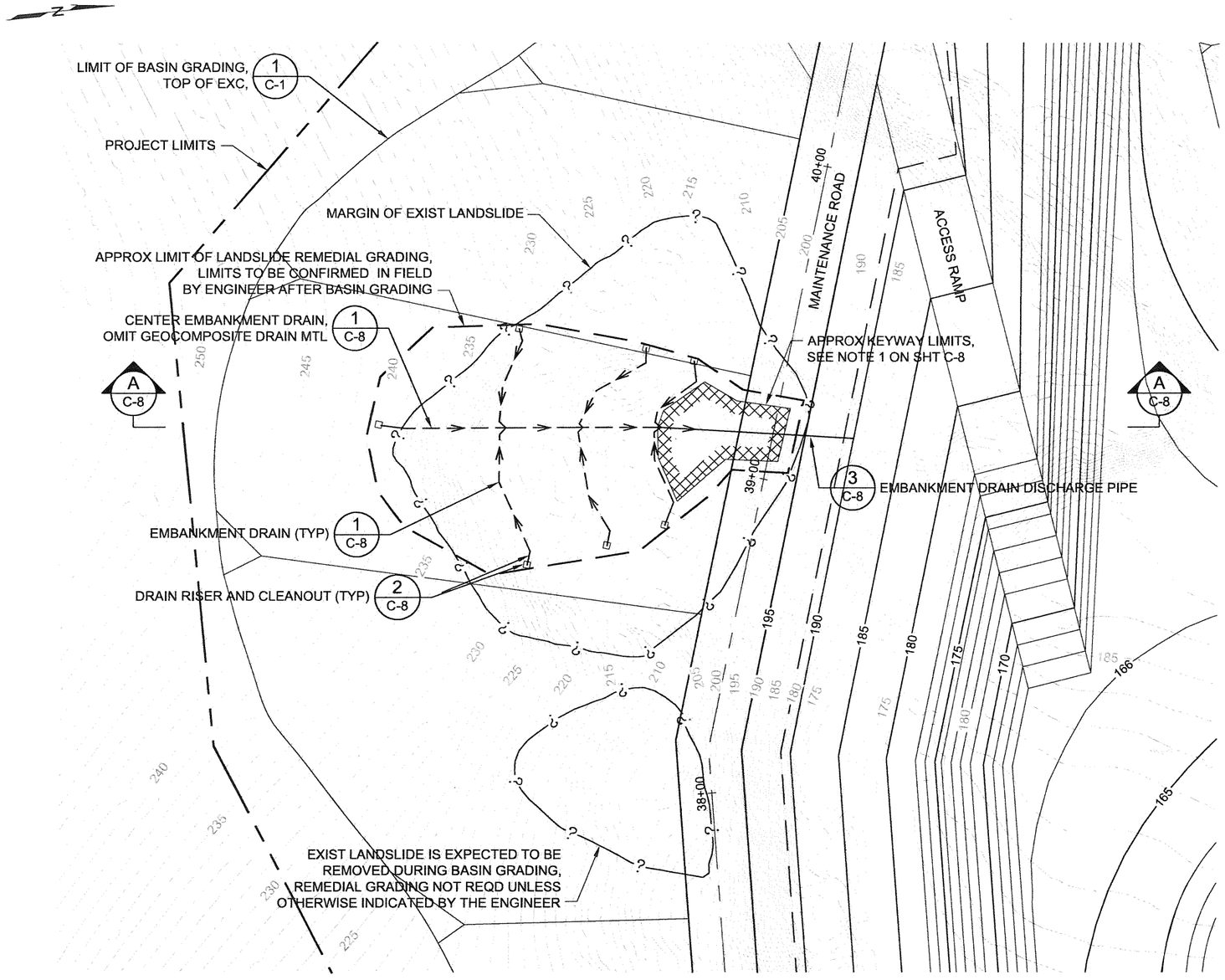

DRAFT - 90% REVIEW

C-7

REVISIONS			
NO.	DESCRIPTION	BY	DATE

DES.: C. HOCKETT
DRAWN: C. HOCKETT
CHKD.: P. GREGORY
DATE: 08-16-10
SCALE: 1" = 100'
FLD. BK. xxxx

REGISTERED PROFESSIONAL ENGINEER PHILIP O. GREGORY No. Geo GE 2193 No. Civil C 46728 Exp. 3/31/11 CIVIL GEOTECHNICAL STATE OF CALIFORNIA

PROJECT ENGINEER

PLANS APPROVAL DATE

CE&G
CAL ENGINEERING & GEOLOGY

CONTRA COSTA COUNTY
PUBLIC WORKS DEPARTMENT
255 GLACIER DRIVE
MARTINEZ, CALIFORNIA 94553

0 20 40
SCALE, FEET

FOR REDUCED PLANS ORIGINAL SCALE IS IN INCHES
0 1 2 3

BASE MAP	EAST COORD.	NORTH COORD.
L23	1635	528

UPPER SAND CREEK DETENTION BASIN

SLOPE STABILIZATION - PLAN

FILE NO. FD-3210

SHEET XX OF YY

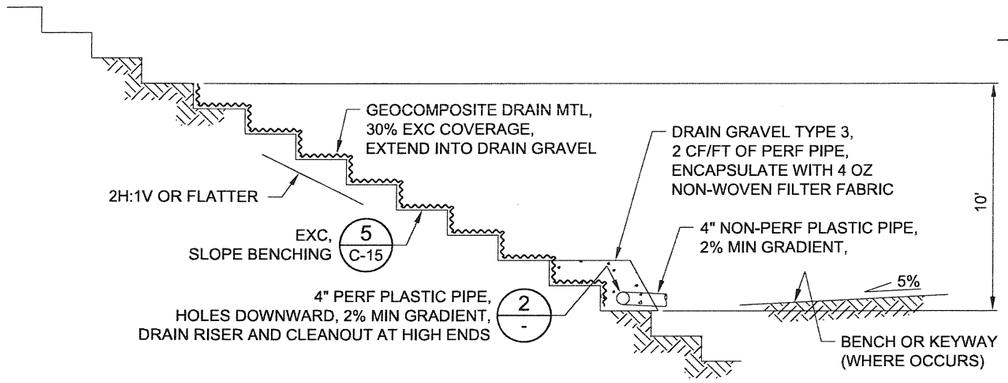

EMBANKMENT DRAIN 1 / -
NO SCALE

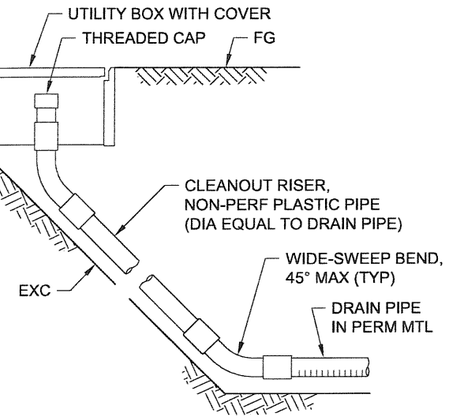

DRAIN RISER AND CLEANOUT 2 / -
NO SCALE

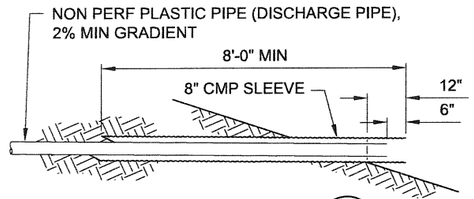

DISCHARGE PIPE 3 / -
NO SCALE

NOTES

1. FINAL EXCAVATION CONFIGURATION WILL BE DETERMINED DURING CONSTRUCTION BY THE ENGINEER.
2. THIS SHEET IS INTENDED TO SHOW LANDSLIDE REMEDIAL GRADING ONLY. SEE OTHER SHEETS FOR DETAILS NOT SHOWN.

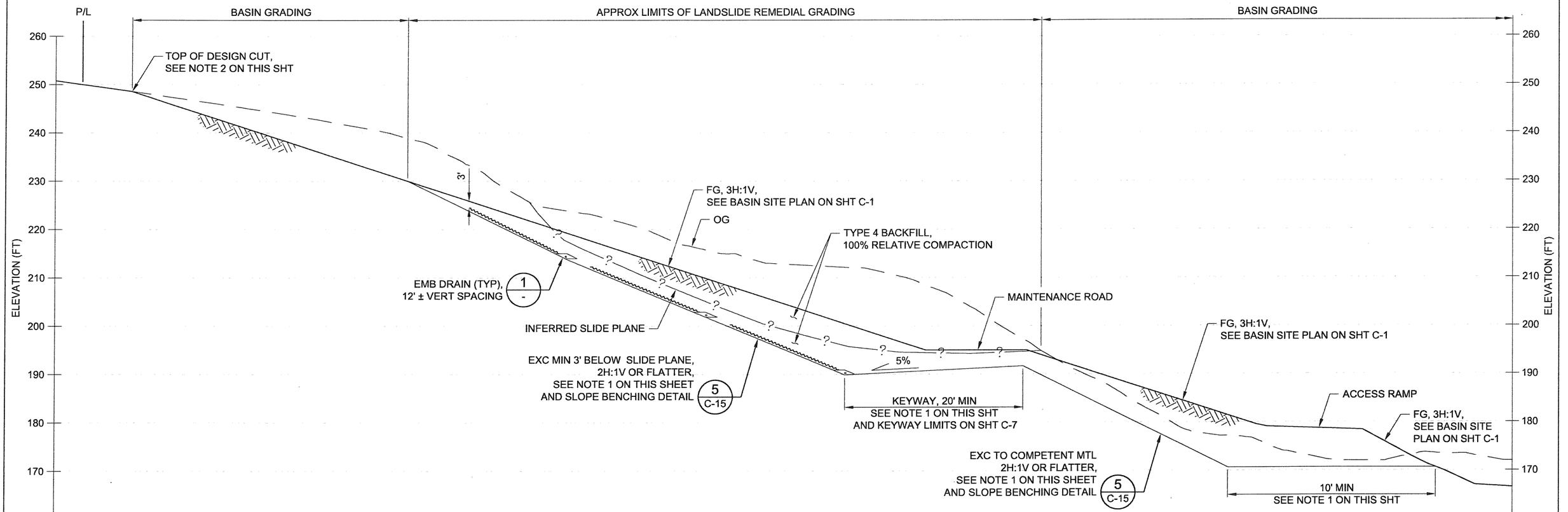

SECTION A / C-7

0 10 20
SCALE, FEET

DRAFT - 90% REVIEW

C-8

REVISIONS			
NO.	DESCRIPTION	BY	DATE

DES.: C. HOCKETT
DRAWN: C. HOCKETT
CHKD.: P. GREGORY
DATE: 08-13-10
SCALE: 1" = 100'
FLD. BK. xxxx

REGISTERED PROFESSIONAL ENGINEER — PHILLIP O. GREGORY — No. Geo GE 2193 — No. Civil C 46728 — Exp. 3/31/11 — CERTIFIED ENGINEERING GEOLOGIST — STATE OF CALIFORNIA

PROJECT ENGINEER

PLANS APPROVAL DATE

CE&G
CAL ENGINEERING & GEOLOGY

CONTRA COSTA COUNTY
PUBLIC WORKS DEPARTMENT
255 GLACIER DRIVE
MARTINEZ, CALIFORNIA 94553

SCALE: AS INDICATED

FOR REDUCED PLANS ORIGINAL SCALE IS IN INCHES
0 1 2 3

BASE MAP	EAST COORD.	NORTH COORD.
L23	1635	528

UPPER SAND CREEK DETENTION BASIN
SLOPE STABILIZATION - SECTION AND DETAILS
FILE NO. FD-3210
SHEET XX OF YY

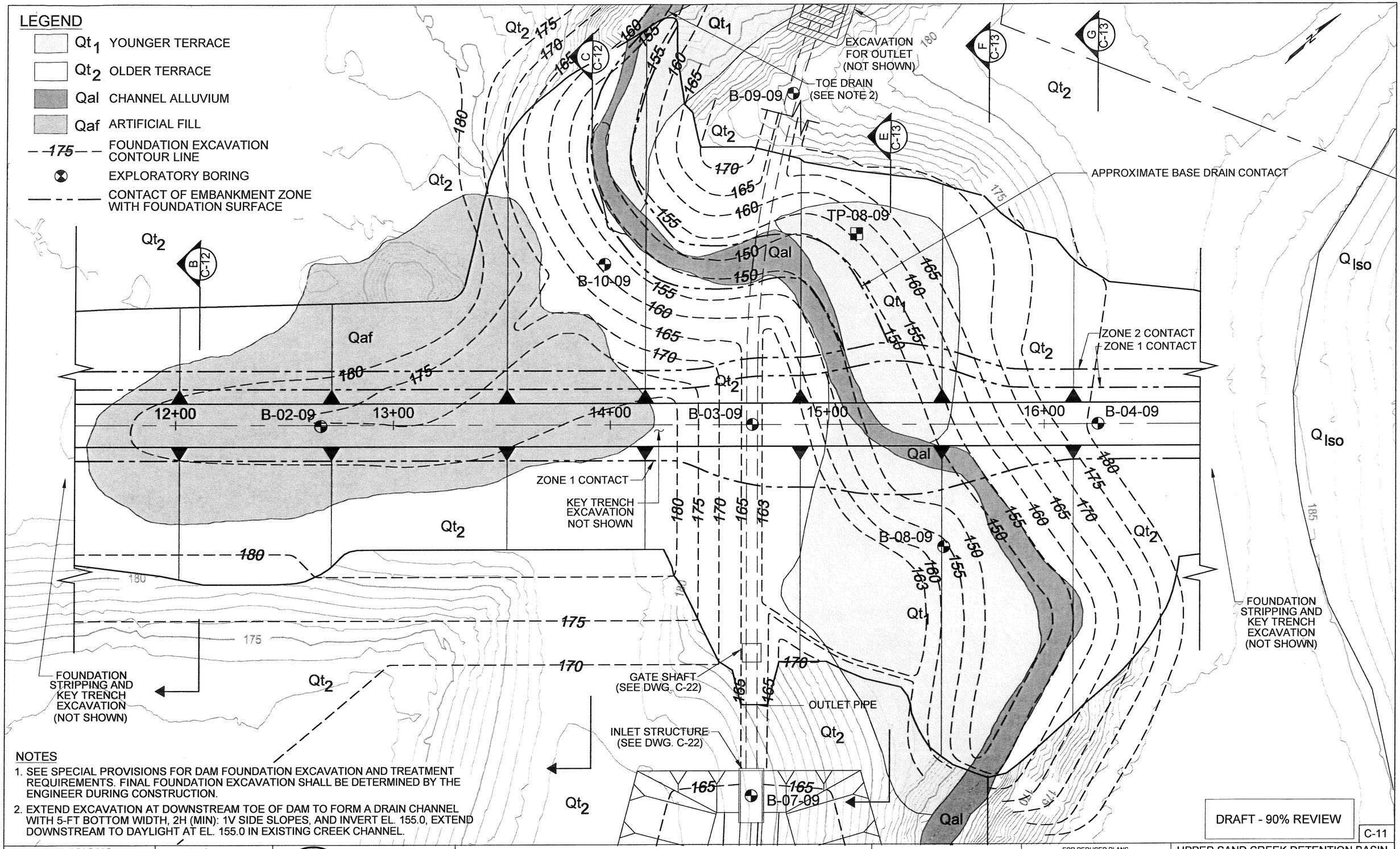

NOTES

1. SEE SPECIAL PROVISIONS FOR DAM FOUNDATION EXCAVATION AND TREATMENT REQUIREMENTS. FINAL FOUNDATION EXCAVATION SHALL BE DETERMINED BY THE ENGINEER DURING CONSTRUCTION.
2. EXTEND EXCAVATION AT DOWNSTREAM TOE OF DAM TO FORM A DRAIN CHANNEL WITH 5-FT BOTTOM WIDTH, 2H (MIN): 1V SIDE SLOPES, AND INVERT EL. 155.0, EXTEND DOWNSTREAM TO DAYLIGHT AT EL. 155.0 IN EXISTING CREEK CHANNEL.

DRAFT - 90% REVIEW

C-11

REVISIONS			
NO.	DESCRIPTION	BY	DATE

DES.: K.V.S.
DRAWN: P.Y.M.
CHKD.: A.P.
DATE: 08-16-10
SCALE: 1" = 20'
FLD. BK. XXXX

REGISTERED PROFESSIONAL ENGINEER ALBERTO PUJOL-RIUS No. 37051 EXP. CIVIL STATE OF CALIFORNIA

PROJECT ENGINEER

PLANS APPROVAL DATE

GEI Consultants

CONTRA COSTA COUNTY
PUBLIC WORKS DEPARTMENT
255 GLACIER DRIVE
MARTINEZ, CALIFORNIA 94553

0 20 40
SCALE, FEET

FOR REDUCED PLANS ORIGINAL SCALE IS IN INCHES
0 1 2 3

BASE MAP	EAST COORD.	NORTH COORD.
L23	1635	528

UPPER SAND CREEK DETENTION BASIN

DAM EXCAVATION PLAN

FILE NO. FD-3210 SHEET XX OF YY

CADD FILE# C-11.dwg PEN TBL. GEIWALKER.ctb

C-11 08-16-10 PYM

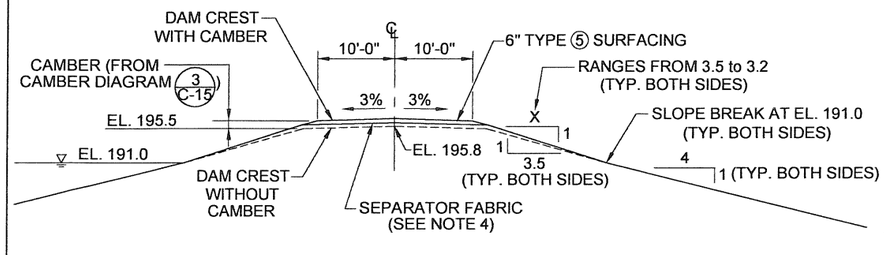

CREST DETAIL 1 / NTS

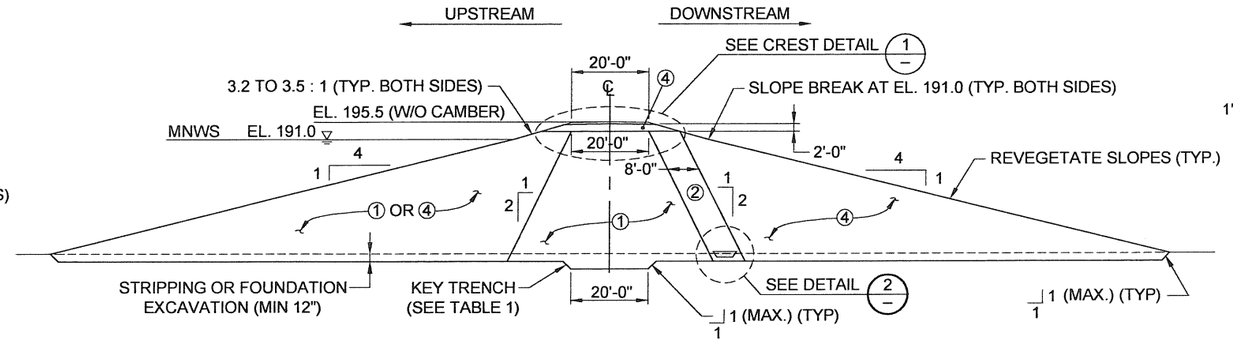

TYPICAL DAM SECTION (SEE NOTE 1) A –

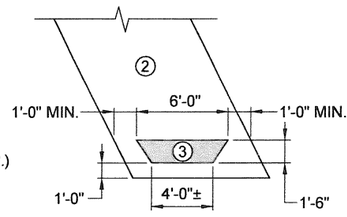

DETAIL 2 / 1" = 5'-0"

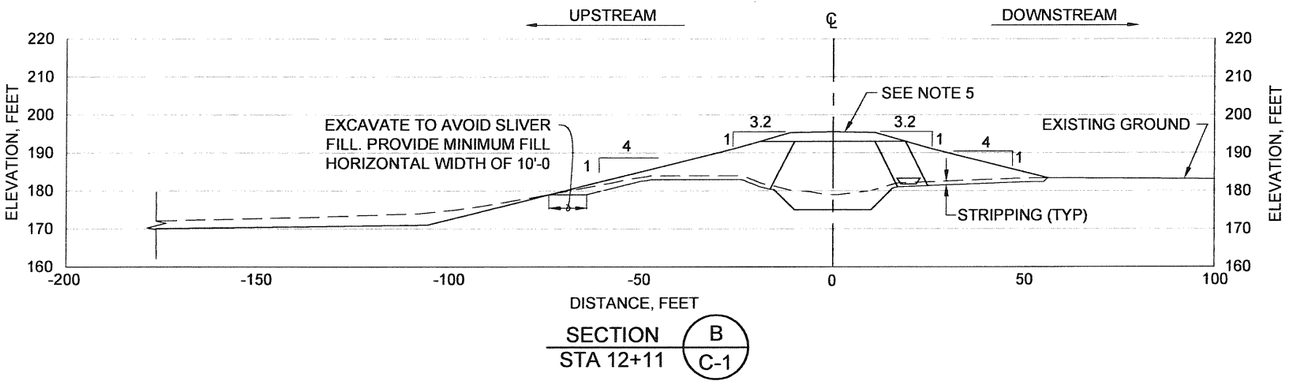

SECTION STA 12+11 B C-1

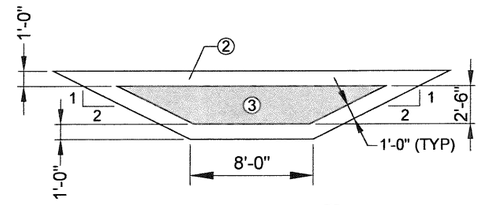

SECTION (SEE NOTE 3) H C-1
1" = 5'-0"

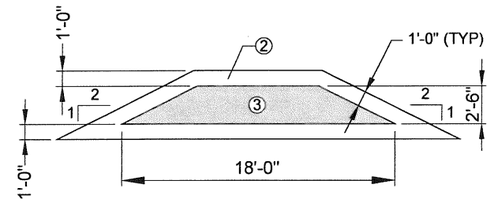

SECTION (ALT.) H C-1
(SEE NOTE 3)
1" = 5'-0"

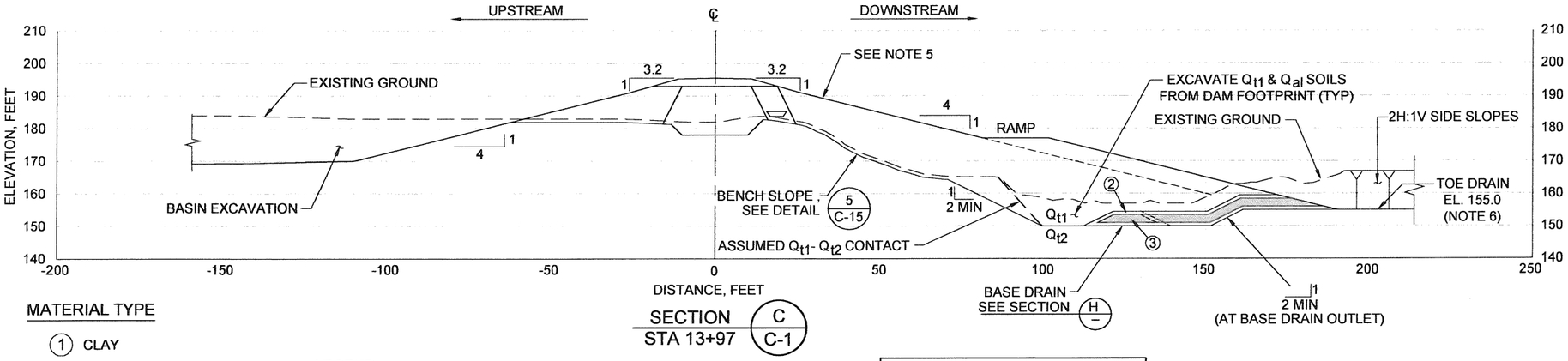

SECTION STA 13+97 C C-1

MATERIAL TYPE

1. CLAY
2. FILTER SAND
3. DRAIN GRAVEL
4. RANDOM FILL
5. AGGREGATE BASE
6. STRUCTURAL FILL

LEGEND

- FINAL GRADE (EMBANKMENT AND EXCAVATION)
- EXISTING GROUND THAT REMAINS
- ORIGINAL GROUND TO BE EXCAVATED
- BOUNDARY BETWEEN DAM FILL AND BASIN FILL

TABLE 1
KEY TRENCH DEPTH BELOW STRIPPED GROUND SURFACE

STATION	DEPTH (FT)
0+00 TO 5+00	1.0
5+00 TO 10+00	2.0
10+00 TO 17+00	3.0
17+00 TO 18+30	2.0

NOTES

1. SECTION A IS A GENERALIZED CROSS-SECTION TO ILLUSTRATE THE EMBANKMENT CONFIGURATION AND INTERNAL ZONING. THE DOWNSTREAM FILTER (ZONE 2 AND ZONE 3) SHALL EXTEND BETWEEN STA. 9+61 AND STA. 17+80.
2. KEY TRENCH DEPTHS SHOWN IN TABLE 1 ARE THE MINIMUM REQUIRED AND MAY BE INCREASED BY THE ENGINEER TO SUIT FIELD CONDITIONS EXPOSED BY THE FOUNDATION EXCAVATION.
3. THE DIMENSIONS OF ZONE 3 ARE APPROXIMATE AND CAN BE ADJUSTED TO FIT THE BOTTOM OF THE VALLEY. HOWEVER, THE MINIMUM ALLOWABLE CROSS-SECTION AREA OF ZONE 3 SHALL BE 30-FT^2 AT ALL SECTIONS. ZONE 3 SHALL BE ENVELOPED BY ZONE 2 WITH A MINIMUM THICKNESS OF 1'-0" ALL AROUND.
4. SEPARATOR FABRIC SHALL BE NONWOVEN-TYPE ROCK SLOPE PROTECTION FABRIC TYPE B.
5. FOR DAM ZONING AND CREST DETAILS SEE SECTION A AND DETAIL 1.
6. TOE DRAIN SHALL BE AN EXCAVATED CHANNEL WITH BOTTOM WIDTH OF 5 FT (MIN.), SIDE SLOPES OF 2(MIN):1, AND INVERT EL. 155.0.

DRAFT - 90% REVIEW

C-12

REVISIONS				DES.: K.V.S.
NO.	DESCRIPTION	BY	DATE	DRAWN: P.Y.M.
				CHKD.: A.T.
				DATE: 08-16-10
				SCALE: 1" = 20'
				FLD. BK. xxxx

REGISTERED PROFESSIONAL ENGINEER ALBERTO PUGA-RUIZ No. 37051 EXP CIVIL STATE OF CALIFORNIA

PROJECT ENGINEER

PLANS APPROVAL DATE

GEI Consultants

CONTRA COSTA COUNTY
PUBLIC WORKS DEPARTMENT
255 GLACIER DRIVE
MARTINEZ, CALIFORNIA 94553

0 20 40
SCALE, FEET

FOR REDUCED PLANS ORIGINAL SCALE IS IN INCHES
0 1 2 3

BASE MAP	EAST COORD.	NORTH COORD.
L23	1635	528

UPPER SAND CREEK DETENTION BASIN

DAM EMBANKMENT - CROSS SECTIONS (Sheet 1 of 2)

FILE NO. FD-3210 | SHEET XX OF YY

CADD FILE# C-12.dwg | PEN TBL. GEIWALKER.ctb

C-12 08-16-10 PYM

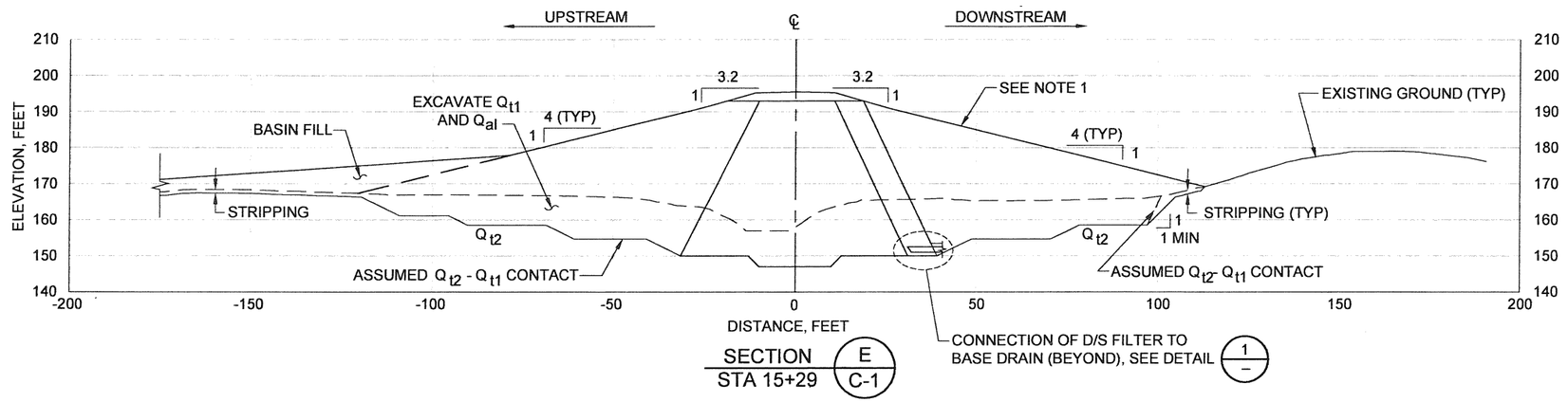

SECTION E / STA 15+29 C-1

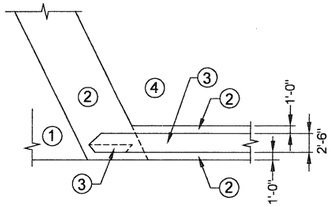

CONNECTION OF D/S FILTER TO BASE DRAIN

DETAIL 1/–

0 10' 20'

SCALE, FEET

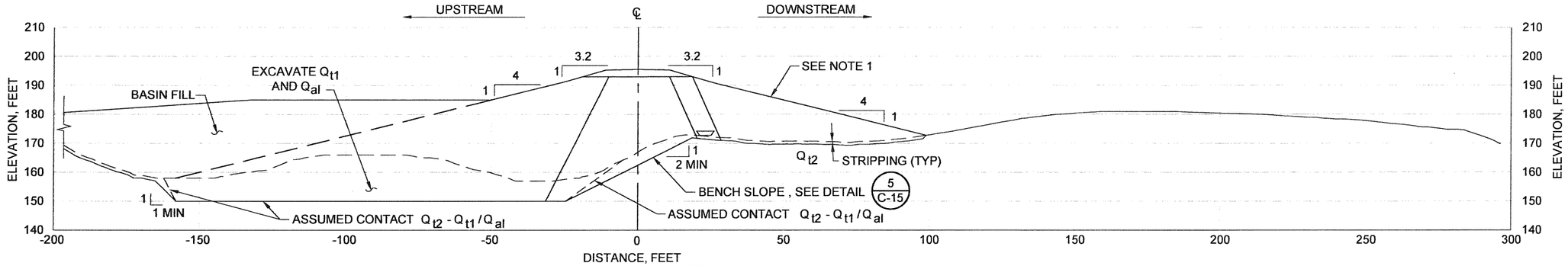

SECTION F / STA 15+74 C-1

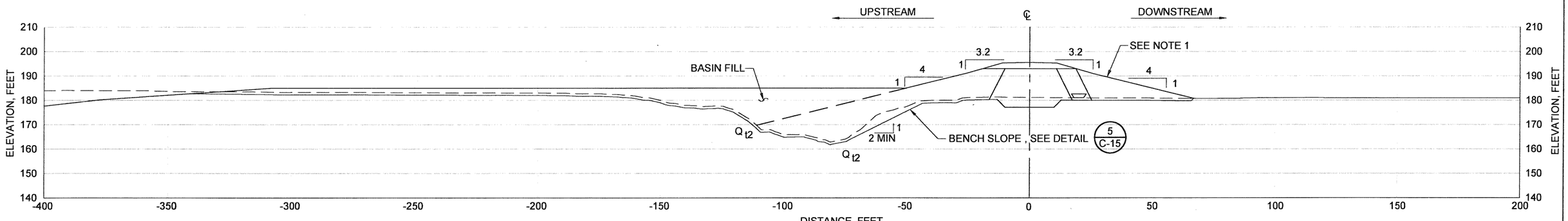

SECTION G / STA 16+25 C-1

LEGEND

- FINAL GRADE (EMBANKMENT AND EXCAVATION)
- EXISTING GROUND THAT REMAINS
- ORIGINAL GROUND TO BE EXCAVATED
- BOUNDARY BETWEEN DAM FILL AND BASIN FILL

NOTES

1. FOR DAM ZONING AND CREST DETAILS SEE SECTION A AND DETAIL 1 OF DWG. C-12.

DRAFT - 90% REVIEW

C-13

C-13 08-16-10 PYM

REVISIONS			
NO.	DESCRIPTION	BY	DATE

DES.: K.V.S.
DRAWN: P.Y.M.
CHKD.: A.T.
DATE: 08-16-10
SCALE: 1" = 20'
FLD. BK. xxxx

REGISTERED PROFESSIONAL ENGINEER ALBERTO PUJOL-RIUS No. 37051 EXP. CIVIL STATE OF CALIFORNIA

PROJECT ENGINEER

PLANS APPROVAL DATE

GEI Consultants

CONTRA COSTA COUNTY
PUBLIC WORKS DEPARTMENT
255 GLACIER DRIVE
MARTINEZ, CALIFORNIA 94553

0 20 40
SCALE, FEET

FOR REDUCED PLANS ORIGINAL SCALE IS IN INCHES
0 1 2 3

BASE MAP	EAST COORD.	NORTH COORD.
L23	1635	528

UPPER SAND CREEK DETENTION BASIN

DAM EMBANKMENT - CROSS-SECTIONS

FILE NO. FD-3210

SHEET XX OF YY

CADD FILE# C-13.dwg

PEN TBL: GEIWALKER.ctb

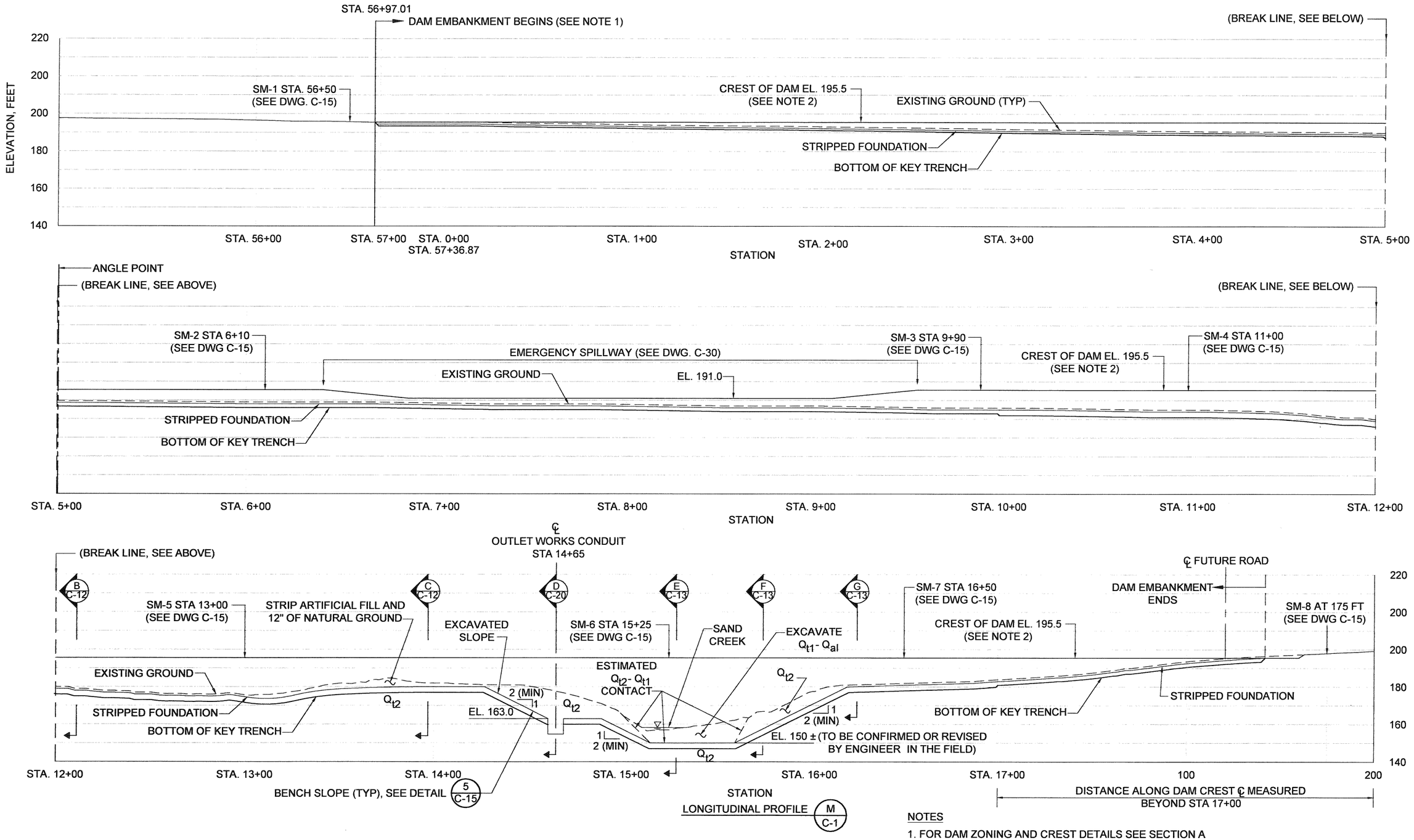

NOTES

1. FOR DAM ZONING AND CREST DETAILS SEE SECTION A AND DETAIL 1 OF DWG. C-12.
2. DAM CREST EL. 195.5 DOES NOT INCLUDE CAMBER. FOR CAMBER PROFILE SEE DWG. C-15.

DRAFT - 90% REVIEW

C-14

REVISIONS			
NO.	DESCRIPTION	BY	DATE

DES.:	K.V.S.
DRAWN:	P.Y.M.
CHKD.:	A.T.
DATE:	08-16-10
SCALE:	1" = 25'
FLD. BK.	xxxx

REGISTERED PROFESSIONAL ENGINEER ALBERTO PUBLICIUS No. 37051 EXP 6/30/11 CIVIL STATE OF CALIFORNIA

PROJECT ENGINEER

PLANS APPROVAL DATE

GEI Consultants

CONTRA COSTA COUNTY
PUBLIC WORKS DEPARTMENT
255 GLACIER DRIVE
MARTINEZ, CALIFORNIA 94553

0 25 50
SCALE, FEET

FOR REDUCED PLANS
ORIGINAL SCALE IS IN INCHES
0 1 2 3

BASE MAP	EAST COORD.	NORTH COORD.
L23	1635	528

UPPER SAND CREEK DETENTION BASIN

DAM EMBANKMENT -
LONGITUDINAL SECTION

FILE NO FD-3210

SHEET XX OF YY

CADD FILE# C-14.dwg

PEN TBL: GEIWALKER.ctb

C-14 08-16-10 PYM

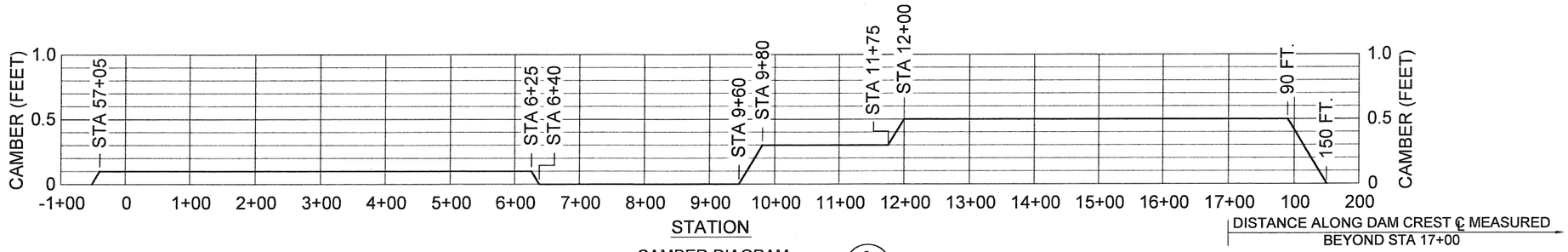

CAMBER DIAGRAM (3 / C-12)

0 100' 200'

SCALE, FEET (HORIZONTAL)

0 0.50' 1.00'

SCALE, FEET (VERTICAL)

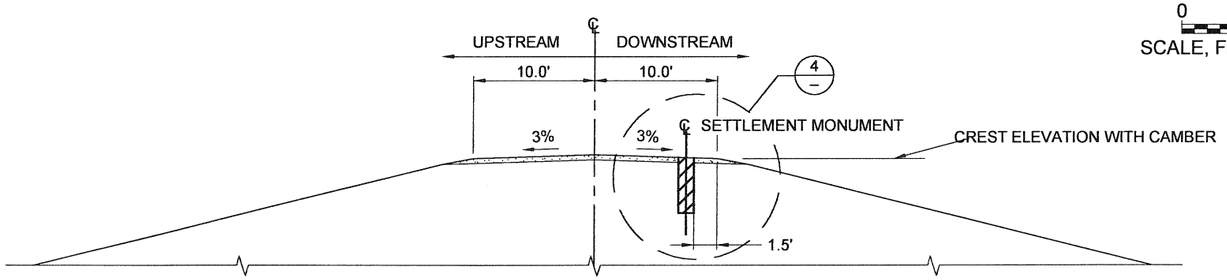

SETTLEMENT MONUMENT PLACEMENT CROSS-SECTION

(NTS)

SETTLEMENT MONUMENT CHART					
SETTLEMENT MONUMENT NO.	℄ STATION	AS-BUILT ℄ STATION	AS-BUILT OFFSET	AS-BUILT MONUMENT ELEVATION (SEE NOTE 1)	CREST ELEVATION ADJACENT TO MONUMENT (FT)
SM-1	56+50				195.5
SM-2	6+10				195.6
SM-3	9+90				195.8
SM-4	11+00				195.8
SM-5	13+00				196.0
SM-6	15+25				196.0
SM-7	16+50				196.0
SM-8	175 FT*				198.0

* DISTANCE ALONG DAM CREST CENTERLINE MEASURED BEYOND STA 17+00

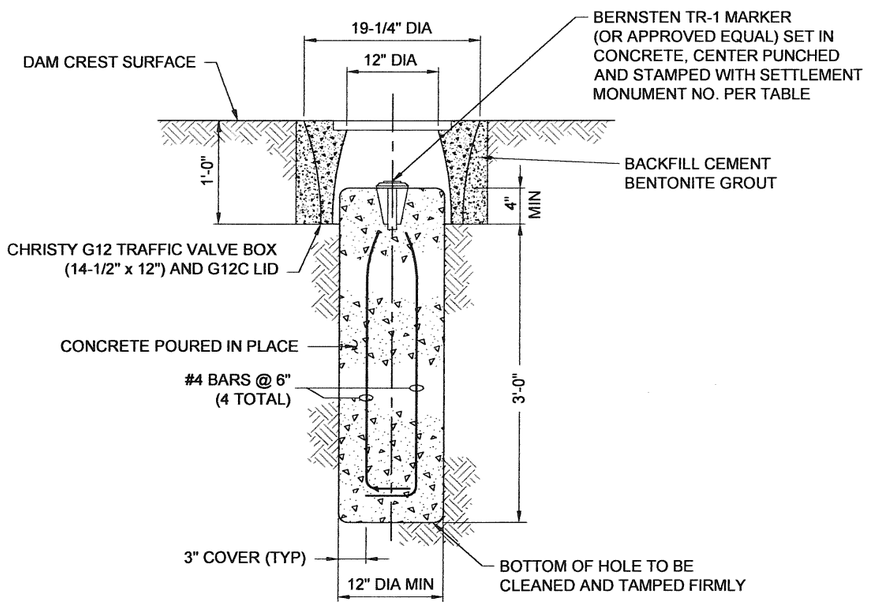

SETTLEMENT MONUMENT TYPICAL DETAIL (4 / —)

(NTS)

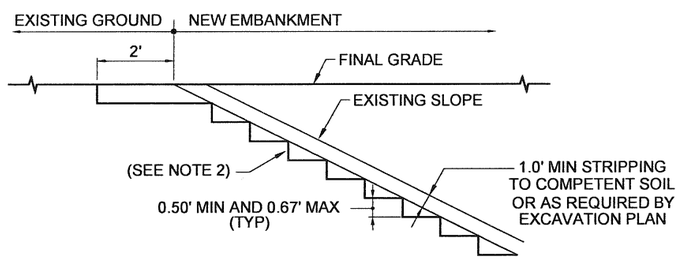

TYPICAL SLOPE BENCHING DETAIL (5 / —)

(NTS)

NOTES

1. COORDINATES AND ELEVATIONS OF EACH SETTLEMENT MONUMENT SHALL BE SURVEYED IN ACCORDANCE WITH SPECIAL PROVISION 10-1.23. SETTLEMENT MONUMENT SURVEY SHALL BE CONDUCTED NOT EARLIER THAN TWO WEEKS AFTER INSTALLATION.
2. PLACE FILL IN HORIZONTAL LIFTS AGAINST VERTICAL FACES CUT INTO EXISTING MATERIAL. AVOID SLIVER FILL BY EXCAVATING SO AS TO PROVIDE A MINIMUM FILL HORIZONTAL WIDTH OF 10.0'.

DRAFT - 90% REVIEW

C-15

C-15 08-16-10 PYW

REVISIONS			
NO.	DESCRIPTION	BY	DATE

DES.: K.V.S. / A.P.
DRAWN: P.Y.M.
CHKD.: A.T.
DATE: 08-16-10
SCALE: AS INDICATED
FLD. BK. xxxx

REGISTERED PROFESSIONAL ENGINEER ALBERTO PUIG-NUÑO No. 37051 EXP CIVIL STATE OF CALIFORNIA

PROJECT ENGINEER

PLANS APPROVAL DATE

GEI Consultants

CONTRA COSTA COUNTY
PUBLIC WORKS DEPARTMENT
255 GLACIER DRIVE
MARTINEZ, CALIFORNIA 94553

SCALE, AS INDICATED

FOR REDUCED PLANS ORIGINAL SCALE IS IN INCHES
0 1 2 3

BASE MAP	EAST COORD.	NORTH COORD.
L23	1635	528

UPPER SAND CREEK DETENTION BASIN

DAM EMBANKMENT - CAMBER, SETTLEMENT MONUMENTS & MISCELLANEOUS DETAILS

FILE NO. FD-3210

SHEET XX OF YY

CADD FILE# C-15.dwg

PEN TBL. GEIWALKER.ctb

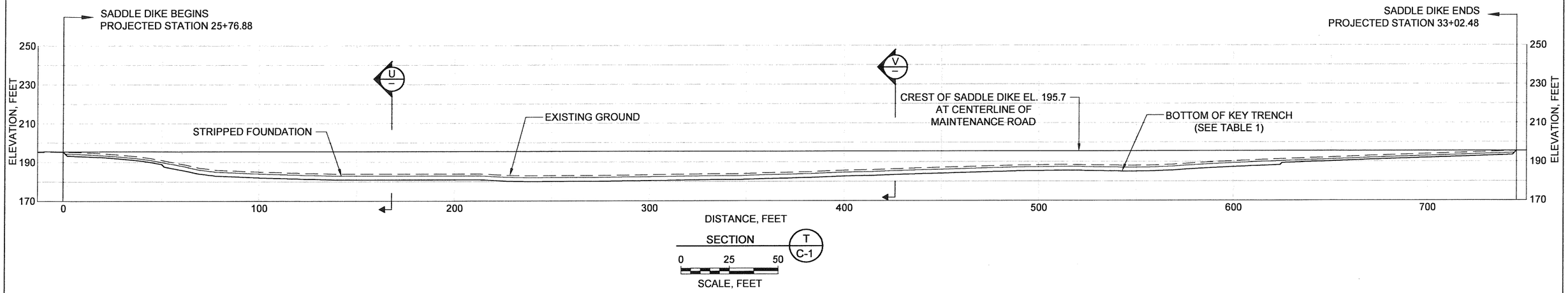

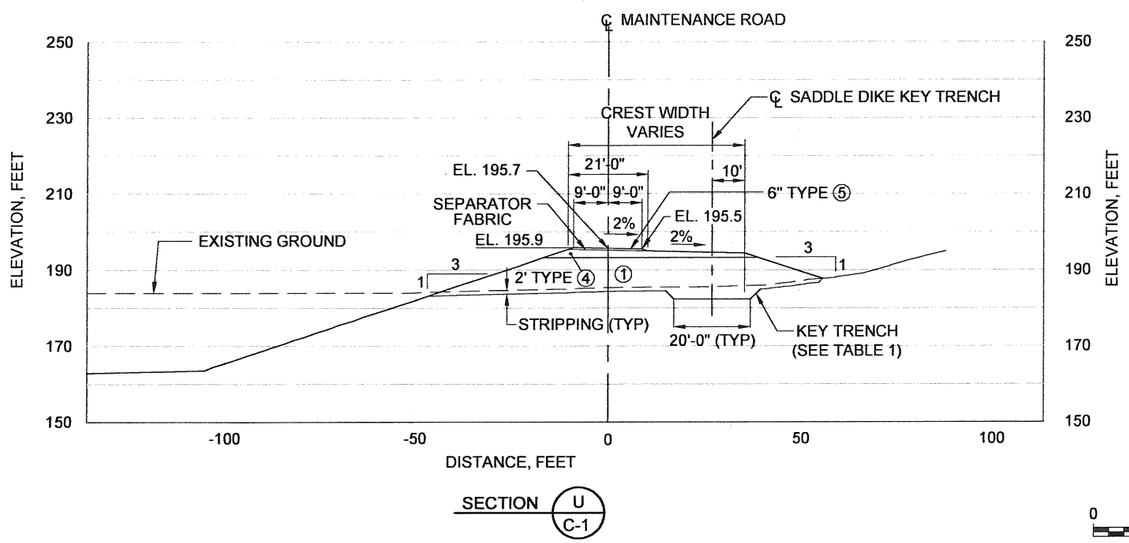

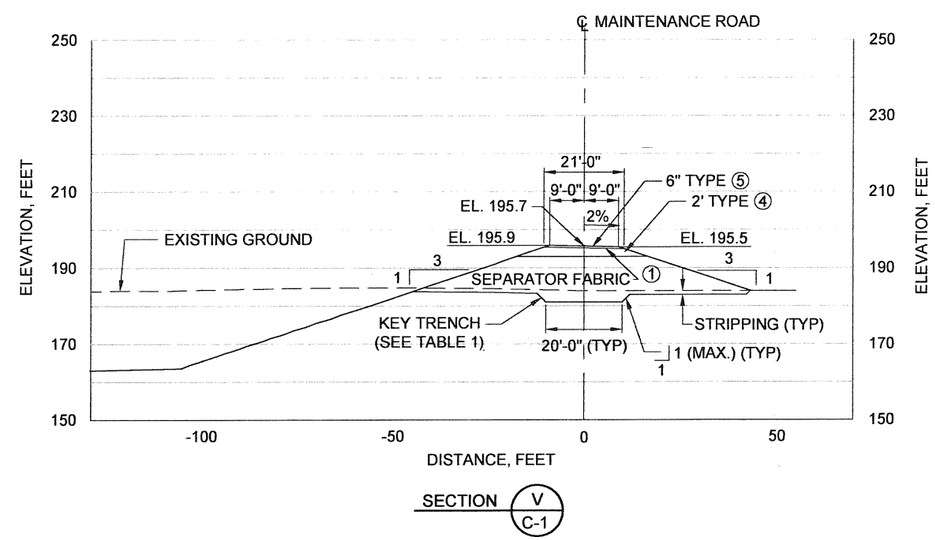

0 20 40
SCALE, FEET

LEGEND

- PROPOSED FINAL GRADE (EMBANKMENT AND EXCAVATION)
- EXISTING GROUND TO REMAIN
- EXISTING GROUND TO BE EXCAVATED

TABLE 1
KEY TRENCH DEPTH BELOW
STRIPPED GROUND SURFACE

DISTANCE (FT)	DEPTH (FT)
0 TO 50	1
50 TO 625	2
625 TO 746	1

NOTES

1. KEY TRENCH DEPTHS SHOWN IN TABLE 1 ARE THE MINIMUM REQUIRED AND MAY BE INCREASED BY THE ENGINEER TO SUIT FIELD CONDITIONS EXPOSED BY THE FOUNDATION EXCAVATION.

DRAFT - 90% REVIEW

C-16

REVISIONS

NO.	DESCRIPTION	BY	DATE

DES.: K.V.S.
DRAWN: P.Y.M.
CHKD.: A.T.
DATE: 08-16-10
SCALE: AS INDICATED
FLD. BK. XXXX

REGISTERED PROFESSIONAL ENGINEER ALBERTO PUJOL-RIUS No. 37051 EXP CIVIL STATE OF CALIFORNIA

PROJECT ENGINEER

PLANS APPROVAL DATE

GEI Consultants

CONTRA COSTA COUNTY
PUBLIC WORKS DEPARTMENT
255 GLACIER DRIVE
MARTINEZ, CALIFORNIA 94553

SCALE AS INDICATED

FOR REDUCED PLANS
ORIGINAL SCALE IS IN INCHES
0 1 2 3

BASE MAP	EAST COORD.	NORTH COORD.
L23	1635	528

UPPER SAND CREEK DETENTION BASIN

SADDLE DIKE PROFILE & SECTIONS

FILE NO. FD-3210 SHEET XX OF YY

CADD FILE# C-16.dwg PEN TBL: GEIWALKER.ctb

C-16 08-16-10 PYM

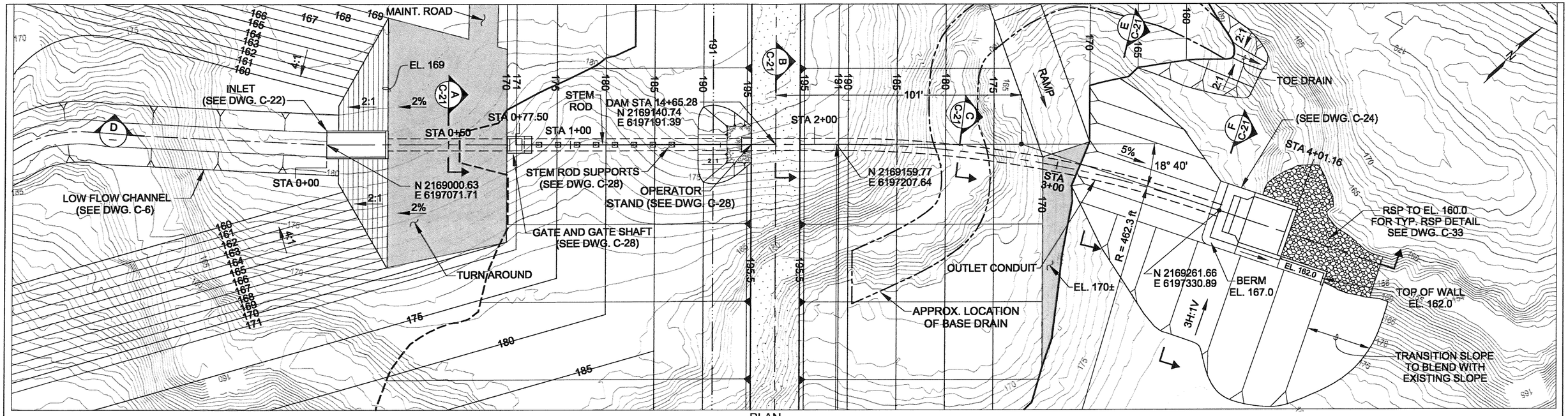

PLAN

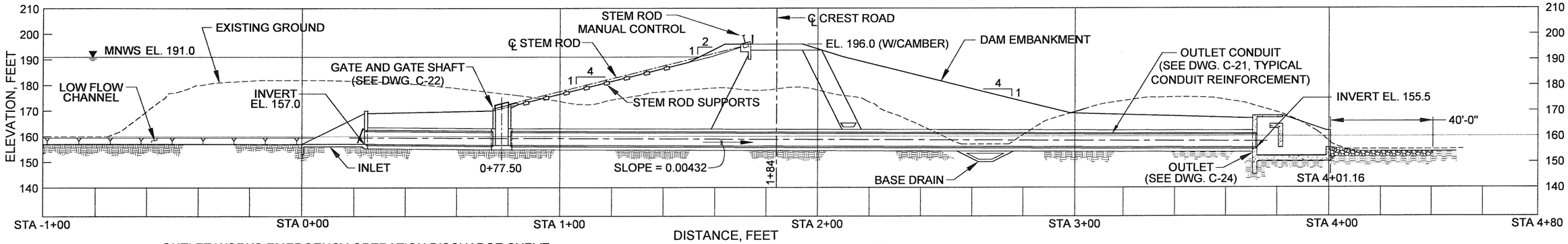

PROFILE ALONG ℄ OUTLET CONDUIT (D / C-1)

OUTLET WORKS EMERGENCY OPERATION DISCHARGE CURVE
(GATE OPEN)

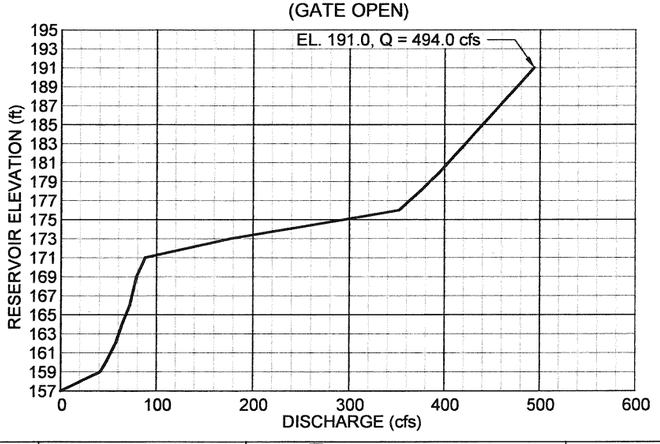

OUTLET WORKS UNCONTROLLED DISCHARGE CURVE (GATE CLOSED)

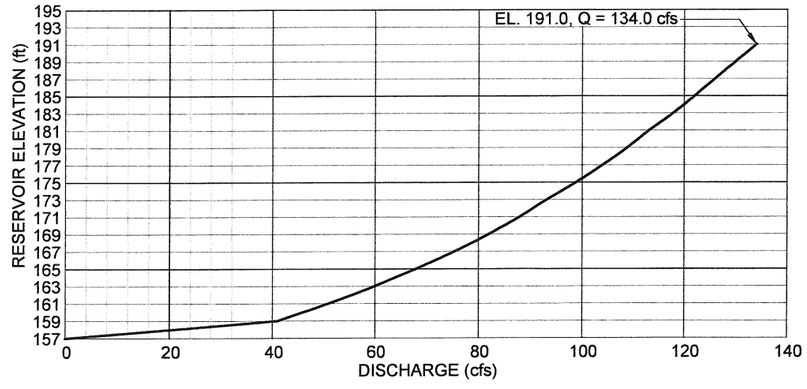

DRAFT - 90% REVIEW

C-20

REVISIONS				DES.: A.T.
NO.	DESCRIPTION	BY	DATE	DRAWN: P.Y.M.
				CHKD.: R.S.
				DATE: 08-16-10
				SCALE: AS SHOWN
				FLD. BK. xxxx

REGISTERED PROFESSIONAL ENGINEER — ALBERTO PUJOL-RUIZ — No. 37051 EXP — CIVIL — STATE OF CALIFORNIA

PROJECT ENGINEER

PLANS APPROVAL DATE

GEI Consultants

CONTRA COSTA COUNTY
PUBLIC WORKS DEPARTMENT
255 GLACIER DRIVE
MARTINEZ, CALIFORNIA 94553

0 20 40
SCALE, FEET

FOR REDUCED PLANS
ORIGINAL SCALE IS IN INCHES
0 1 2 3

BASE MAP	EAST COORD.	NORTH COORD.
L23	1635	528

UPPER SAND CREEK DETENTION BASIN

OUTLET WORKS -
PLAN, PROFILE & CROSS-SECTIONS

FILE NO. FD-3210 | SHEET XX OF YY

CADD FILE# C-20.dwg | PEN TBL. GEIWALKER.ctb

C-20 08-16-10 PYM

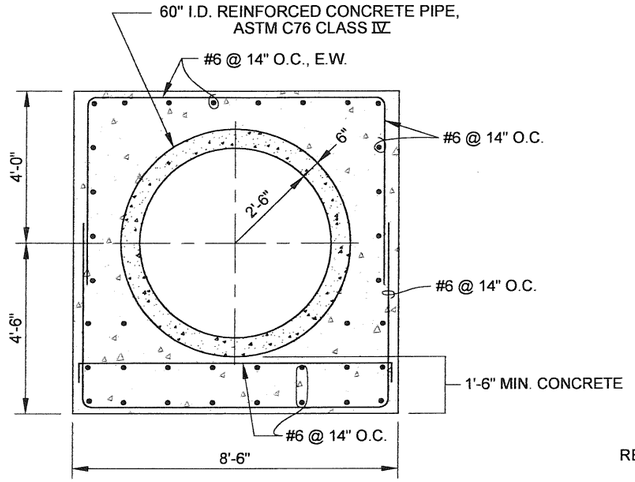

TYPICAL CONDUIT REINFORCEMENT

0 2 4

SCALE, FEET

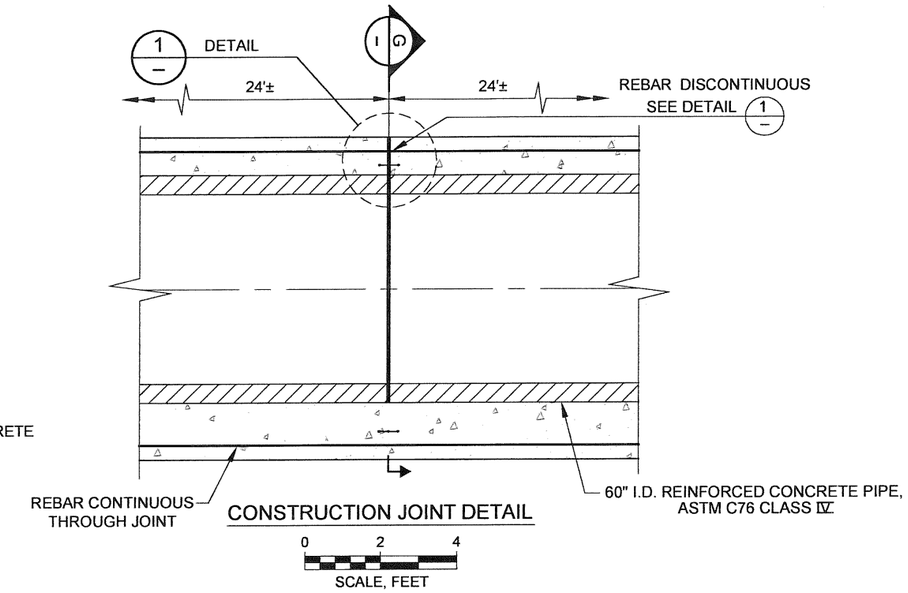

CONSTRUCTION JOINT DETAIL

0 2 4

SCALE, FEET

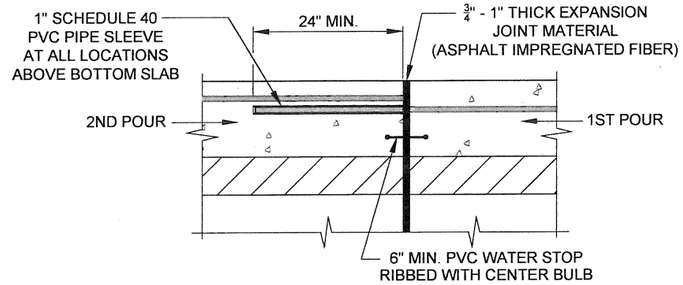

DETAIL 1

0 1 2

SCALE, FEET

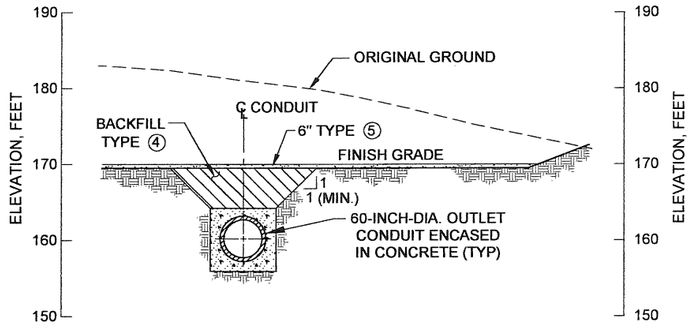

SECTION A
STA 0+50 C-20

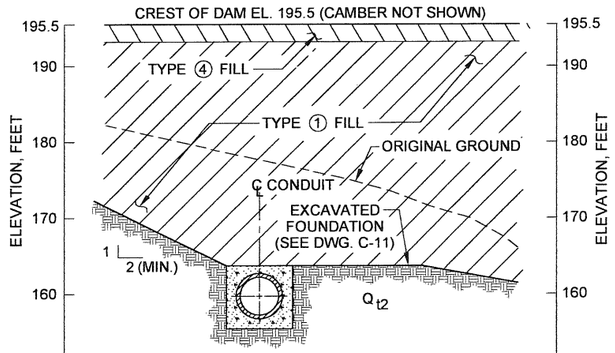

SECTION B
STA 1+84 C-20

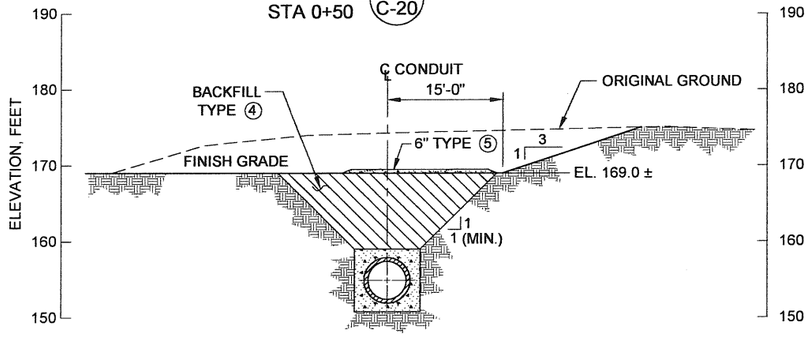

SECTION E
STA 3+25 C-20

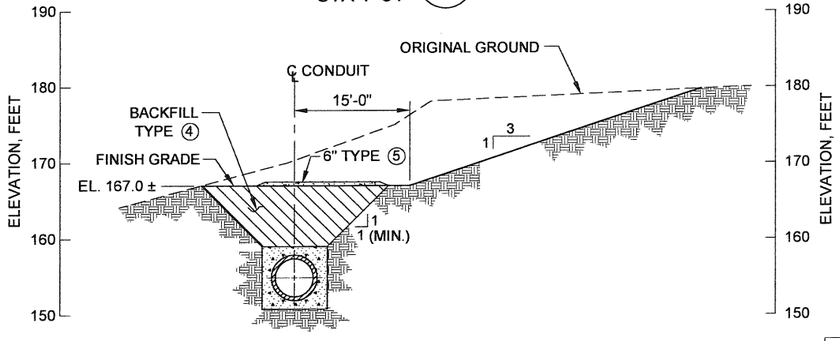

SECTION F
STA 3+60 C-20

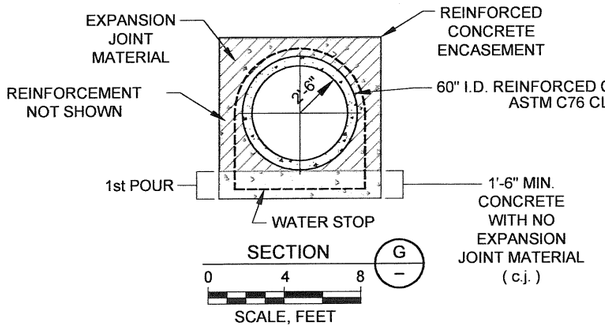

SECTION G

0 4 8

SCALE, FEET

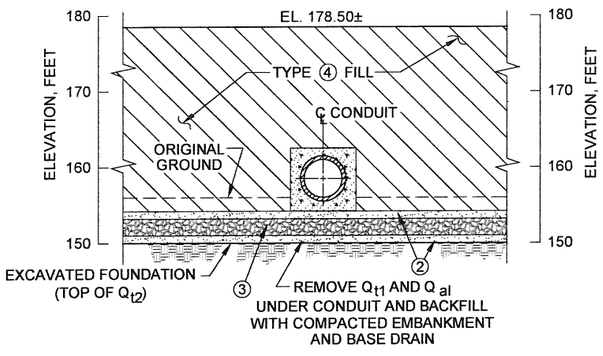

SECTION C
STA 2+60 C-20

DRAFT - 90% REVIEW

C-21

C-21 08-16-10 PYM

REVISIONS			
NO.	DESCRIPTION	BY	DATE

DES.:	AT
DRAWN:	PYM
CHKD.:	KVS
DATE:	08-16-10
SCALE:	1" = 10'
FLD. BK.	xxxx

REGISTERED PROFESSIONAL ENGINEER ALBERTO PUJOL-STIB No. 37051 EXP CIVIL STATE OF CALIFORNIA

PROJECT ENGINEER

PLANS APPROVAL DATE

GEI Consultants

CONTRA COSTA COUNTY
PUBLIC WORKS DEPARTMENT
255 GLACIER DRIVE
MARTINEZ, CALIFORNIA 94553

0 10 20

SCALE, FEET (AND NOTED)

FOR REDUCED PLANS ORIGINAL SCALE IS IN INCHES

0 1 2 3

BASE MAP	EAST COORD.	NORTH COORD.
L23	1635	528

UPPER SAND CREEK DETENTION BASIN

OUTLET WORKS - SECTIONS & DETAILS

FILE NO.	FD-3210	SHEET XX OF YY
CADD FILE#	C-21.dwg	PEN TBL. GEIWALKER.ctb

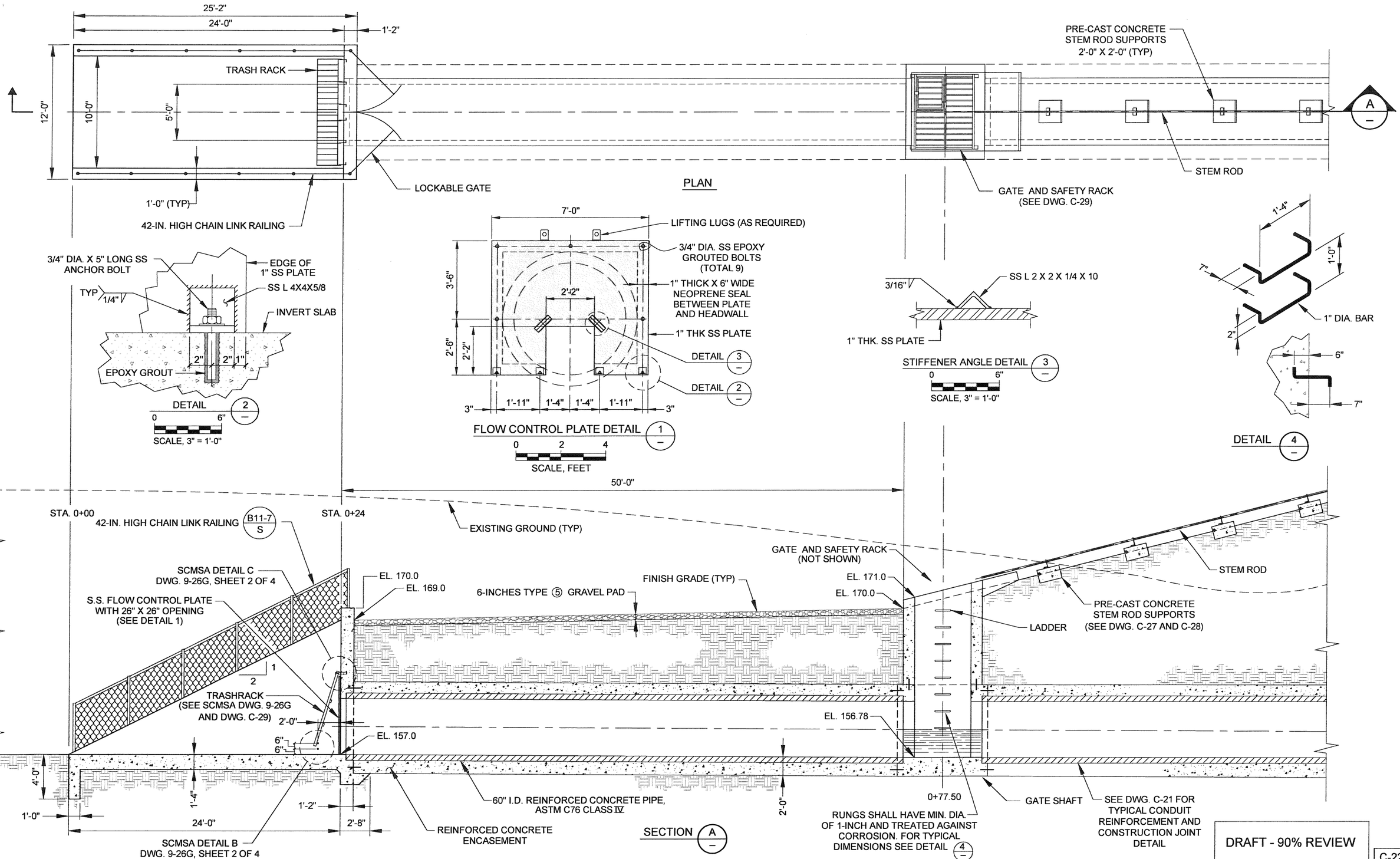

DRAFT - 90% REVIEW

C-22

REVISIONS			
NO.	DESCRIPTION	BY	DATE

DES.: A.T.
DRAWN: P.Y.M.
CHKD.: R.S.
DATE: 08-16-10
SCALE: 1" = 4' AND NOTED
FLD. BK. xxxx

REGISTERED PROFESSIONAL ENGINEER ALBERTO PUIG-RUIZ No. 37051 EXP CIVIL STATE OF CALIFORNIA

PROJECT ENGINEER

PLANS APPROVAL DATE

GEI Consultants

CONTRA COSTA COUNTY
PUBLIC WORKS DEPARTMENT
255 GLACIER DRIVE
MARTINEZ, CALIFORNIA 94553

0 4' 8'
SCALE, FEET AND NOTED

FOR REDUCED PLANS ORIGINAL SCALE IS IN INCHES
0 1 2 3

BASE MAP	EAST COORD.	NORTH COORD.
L23	1635	528

UPPER SAND CREEK DETENTION BASIN

OUTLET WORKS - INLET STRUCTURE DETAILS

FILE NO. FD-3210 SHEET XX OF YY

CADD FILE# C-22.dwg PEN TBL: GEIWALKER.ctb

C-22 08-16-10 PYM

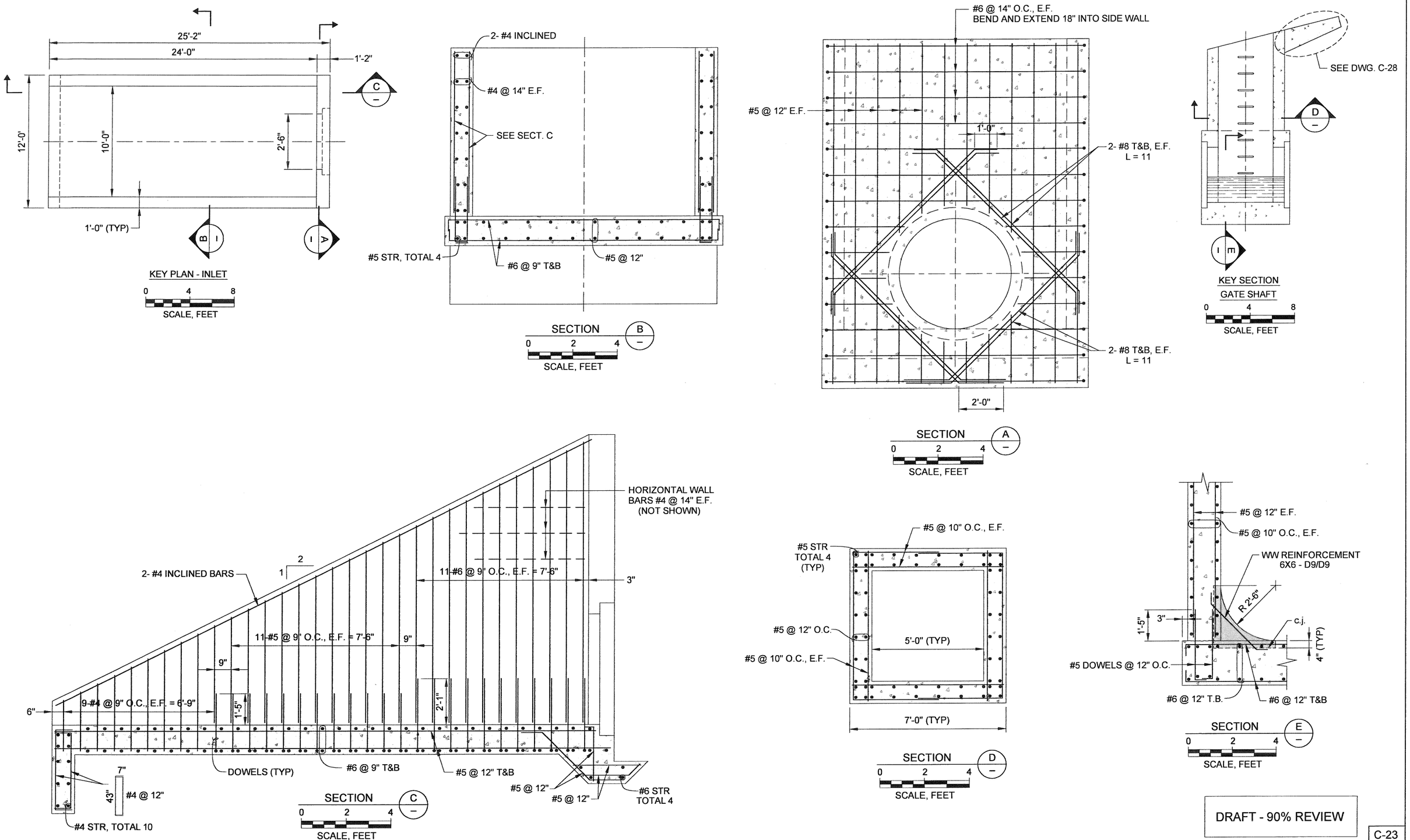

DRAFT - 90% REVIEW

C-23

REVISIONS			
NO.	DESCRIPTION	BY	DATE

DES.: A.T.
DRAWN: P.Y.M.
CHKD.: R.S.
DATE: 08-16-10
SCALE: AS NOTED
FLD. BK. XXXX

REGISTERED PROFESSIONAL ENGINEER ALBERTO PUJOL-RIUS No. 37051 EXP CIVIL STATE OF CALIFORNIA

PROJECT ENGINEER

PLANS APPROVAL DATE

GEI Consultants

CONTRA COSTA COUNTY
PUBLIC WORKS DEPARTMENT
255 GLACIER DRIVE
MARTINEZ, CALIFORNIA 94553

SCALE, AS NOTED

FOR REDUCED PLANS
ORIGINAL SCALE IS IN INCHES
0 1 2 3

BASE MAP	EAST COORD.	NORTH COORD.
L23	1635	528

UPPER SAND CREEK DETENTION BASIN

OUTLET WORKS -
INLET STRUCTURE AND GATE SHAFT
REINFORCEMENT DETAILS

FILE NO. FD-3210

SHEET XX OF YY

CADD FILE# C-23.dwg

PEN TBL: GEIWALKER.ctb

C-23 08-16-10 PYM

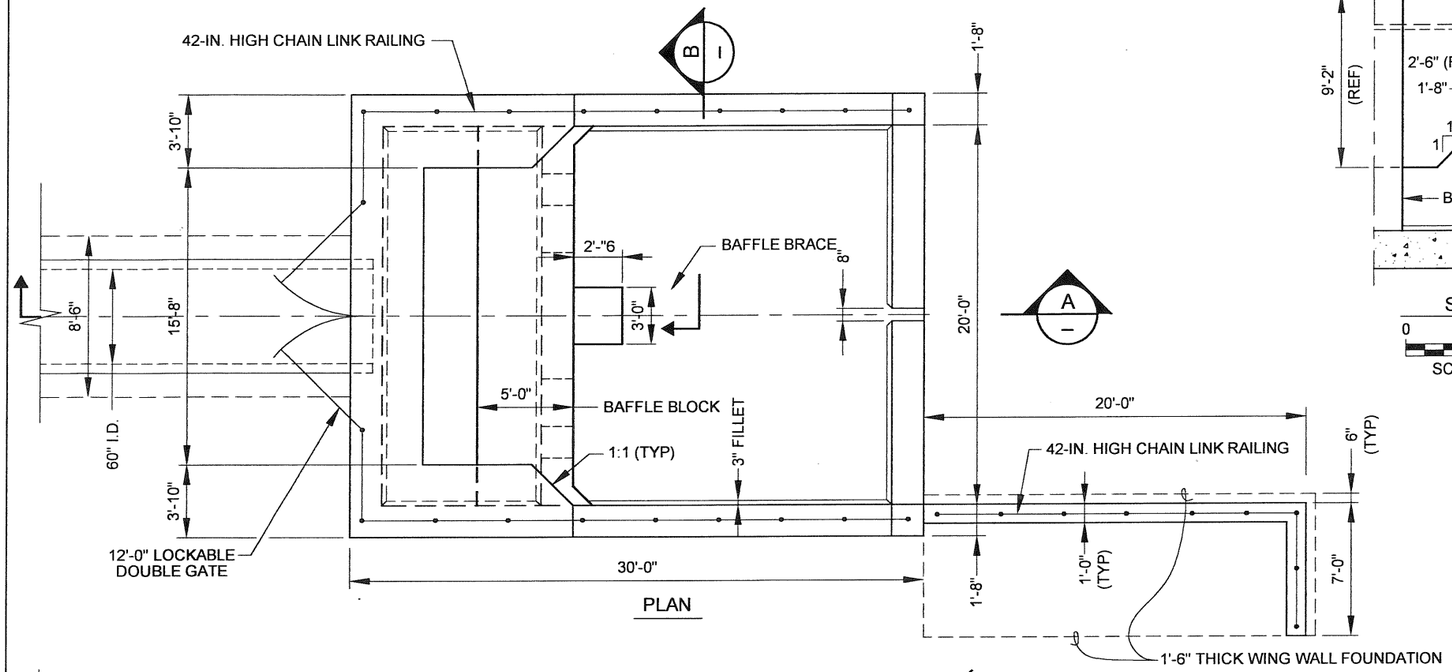

PLAN

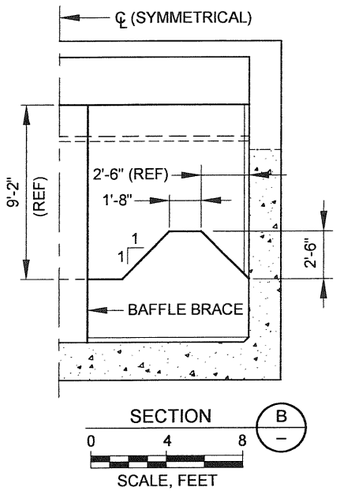

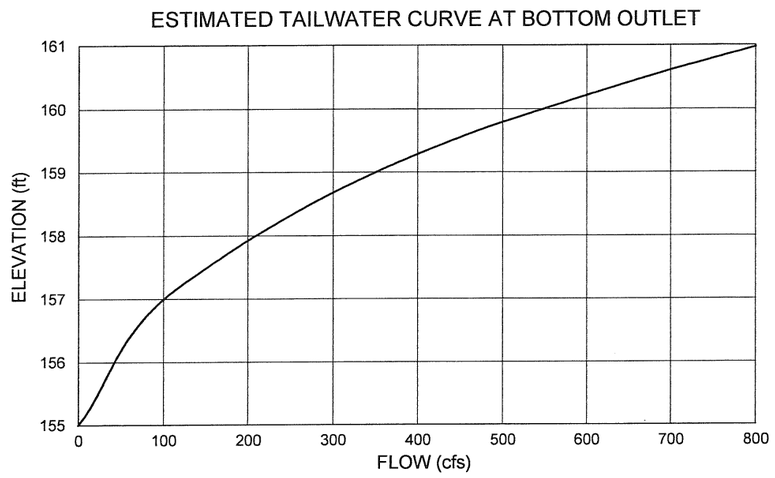

NOTE

1. EXCAVATED SLOPES SHOWN ARE STEEPEST ALLOWED. CONTRACTOR SHALL EXCAVATE AT FLATTER SLOPES IF REQIRED FOR SAFETY OF TEMPORARY EXCAVATION .

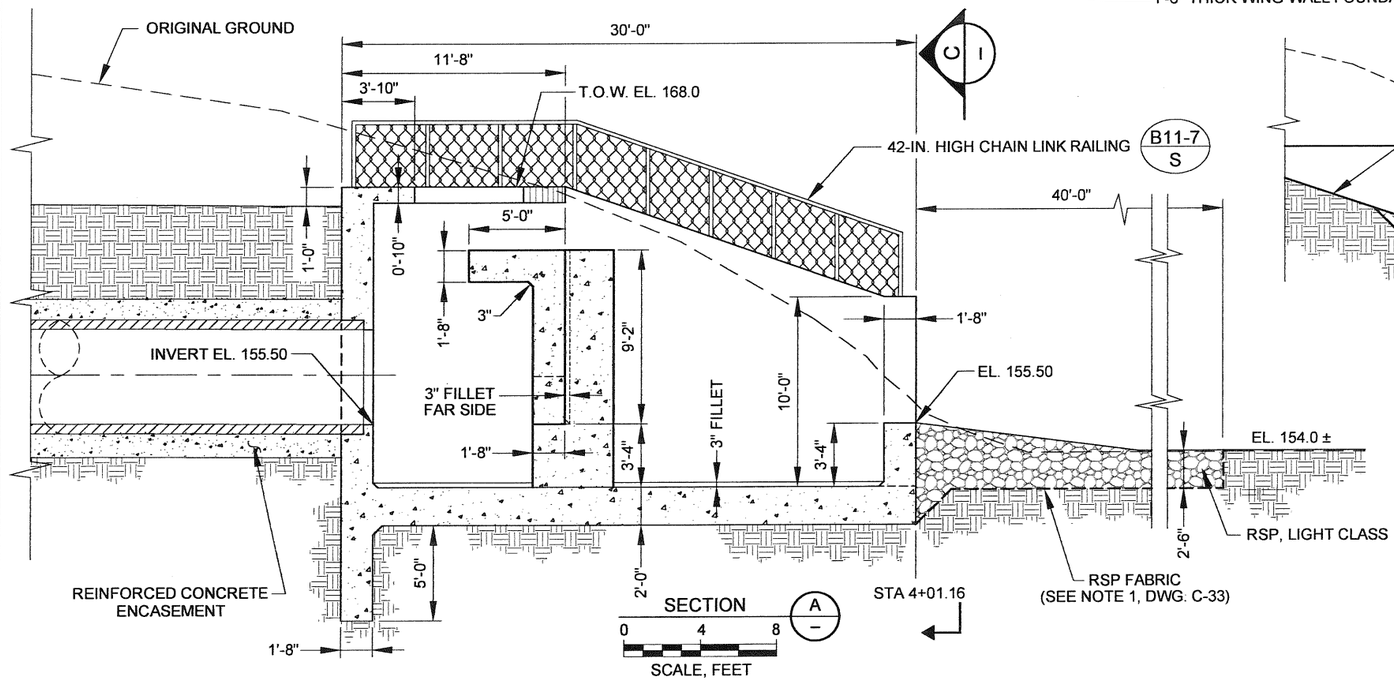

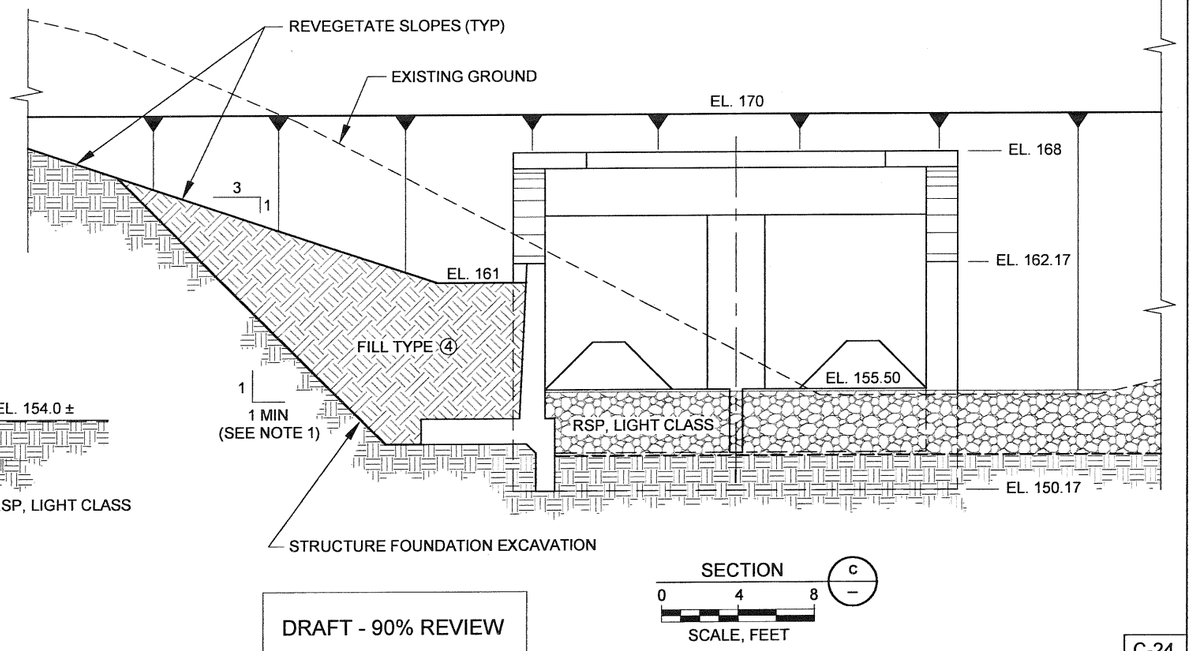

DRAFT - 90% REVIEW

C-24

REVISIONS				DES.: A.T.
NO	DESCRIPTION	BY	DATE	DRAWN: P.Y.M.
				CHKD.: R.S.
				DATE: 08-16-10
				SCALE: 1" = 4'
				FLD. BK. XXXX

REGISTERED PROFESSIONAL ENGINEER ALBERTO RUIZ-RIVAS No. 37051 EXP CIVIL STATE OF CALIFORNIA

PROJECT ENGINEER

PLANS APPROVAL DATE

GEI Consultants

CONTRA COSTA COUNTY
PUBLIC WORKS DEPARTMENT
255 GLACIER DRIVE
MARTINEZ, CALIFORNIA 94553

0 4' 8'
SCALE, FEET

FOR REDUCED PLANS ORIGINAL SCALE IS IN INCHES
0 1 2 3

BASE MAP	EAST COORD.	NORTH COORD.
L23	1635	528

UPPER SAND CREEK DETENTION BASIN
OUTLET WORKS -
OUTLET ENERGY DISSIPATOR SECTIONS & DETAILS
(Sheet 1 of 2)

FILE NO. FD-3210 | SHEET XX OF YY

CADD FILE# C-24.dwg | PEN TBL: GEIWALKER.ctb

C-24 08-16-10 PYM

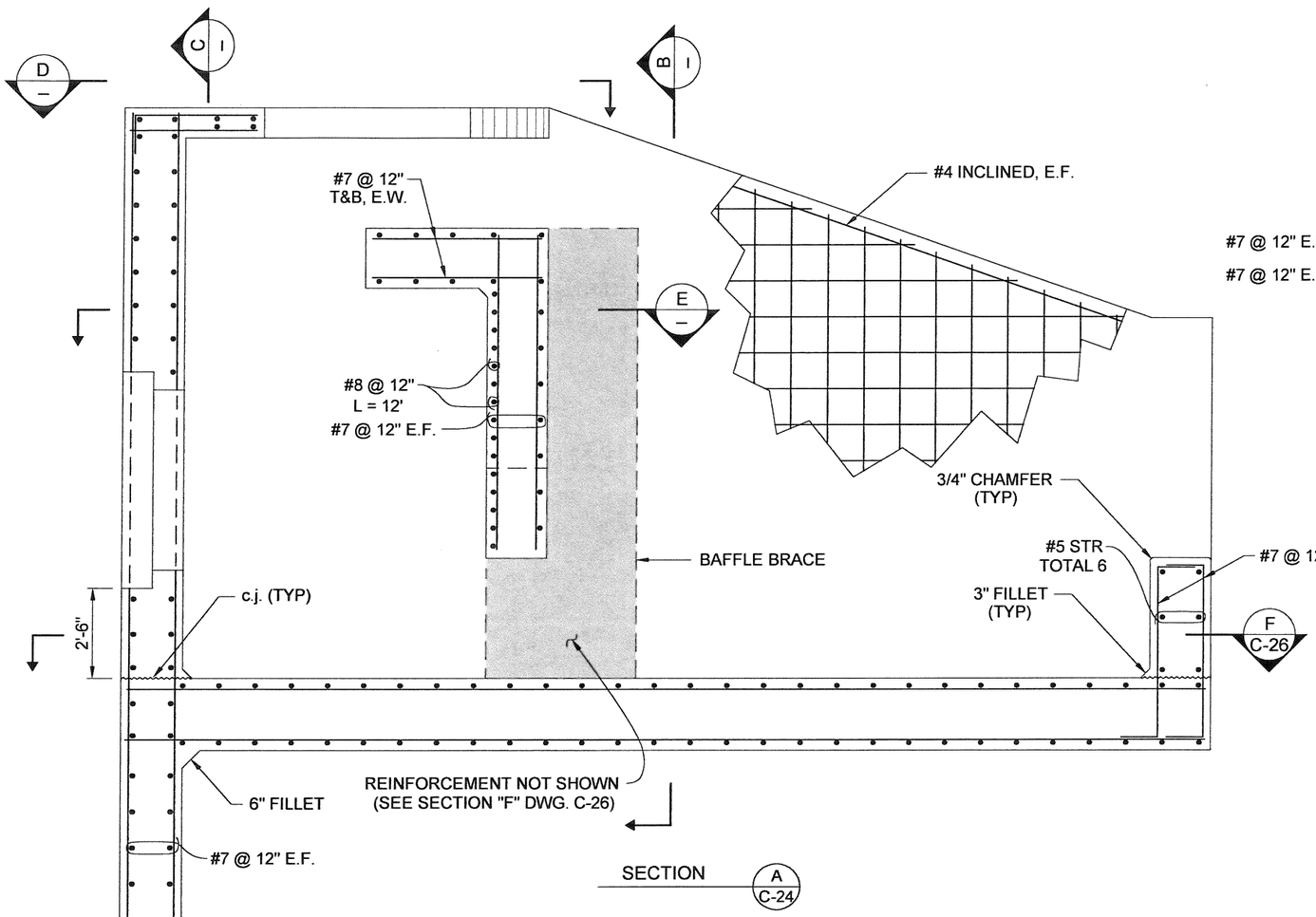

SECTION A C-24

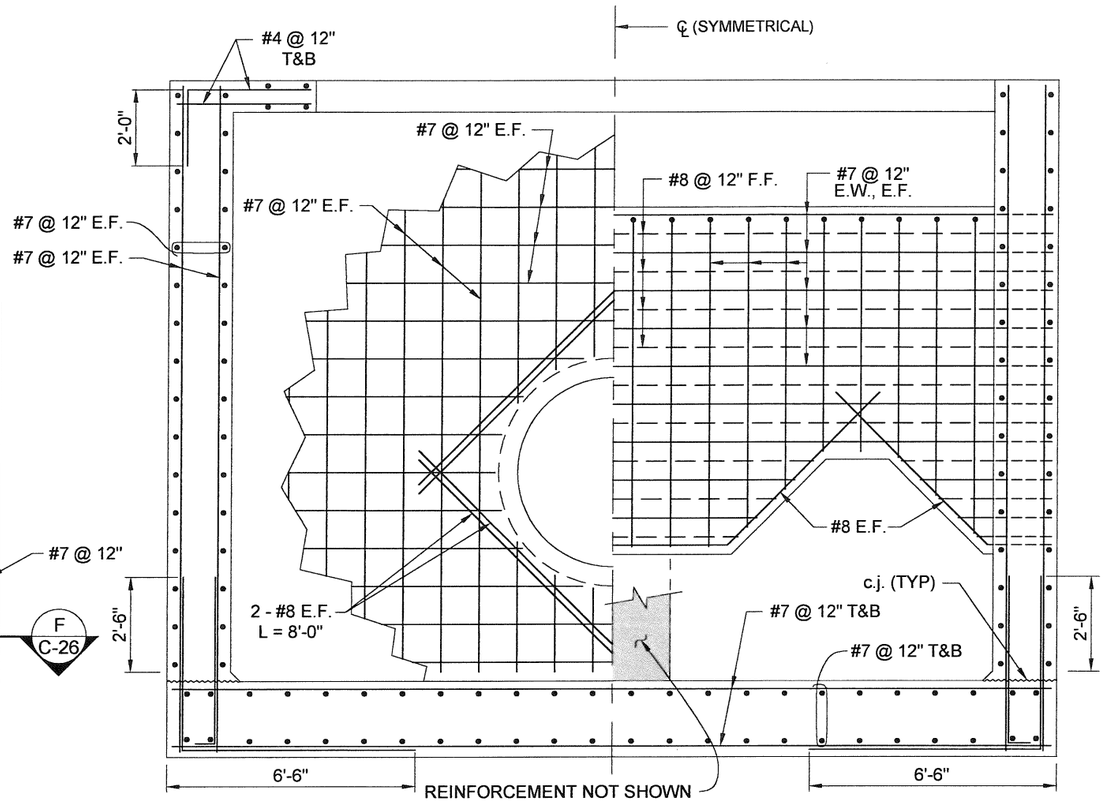

PARTIAL SECTION C – BACK WALL

PARTIAL SECTION B –

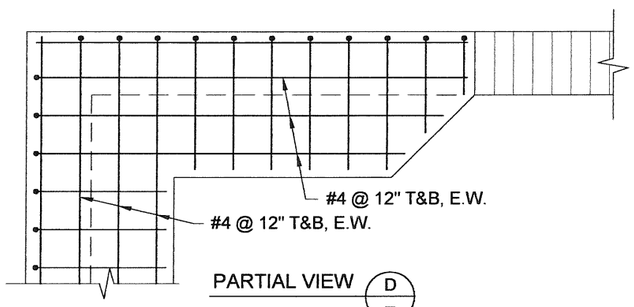

PARTIAL VIEW D –

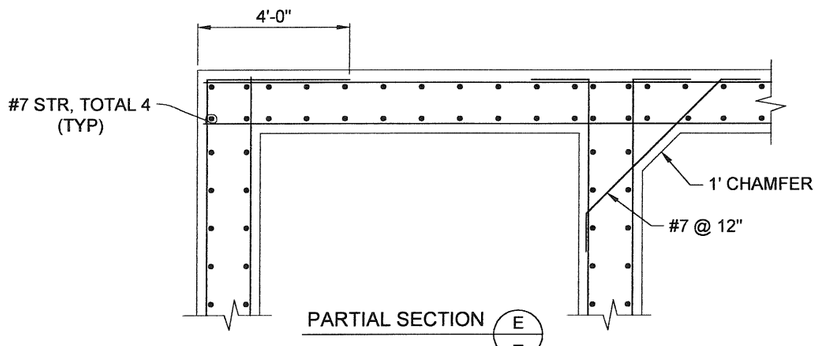

PARTIAL SECTION E –

0 2' 4'

SCALE, FEET

DRAFT - 90% REVIEW

C-25

REVISIONS			
NO.	DESCRIPTION	BY	DATE

DES.:	A.T.
DRAWN:	P.Y.M.
CHKD.:	R.S.
DATE:	08-16-10
SCALE:	AS NOTED
FLD. BK.	xxxx

REGISTERED PROFESSIONAL ENGINEER ALBERTO PUJOL-AYAU No. 37051 EXP. CIVIL STATE OF CALIFORNIA

PROJECT ENGINEER

PLANS APPROVAL DATE

GEI Consultants

CONTRA COSTA COUNTY
PUBLIC WORKS DEPARTMENT
255 GLACIER DRIVE
MARTINEZ, CALIFORNIA 94553

SCALE AS NOTED

FOR REDUCED PLANS ORIGINAL SCALE IS IN INCHES 0 1 2 3

BASE MAP	EAST COORD.	NORTH COORD.
L23	1635	528

UPPER SAND CREEK DETENTION BASIN

OUTLET WORKS - OUTLET ENERGY DISSIPATOR- STRUCTURAL REINFORCEMENT (Sheet 1 of 2)

FILE NO FD-3210

SHEET XX OF YY

CADD FILE# C-25.dwg

PEN TBL: GEIWALKER.ctb

C-25 08-16-10 PYM

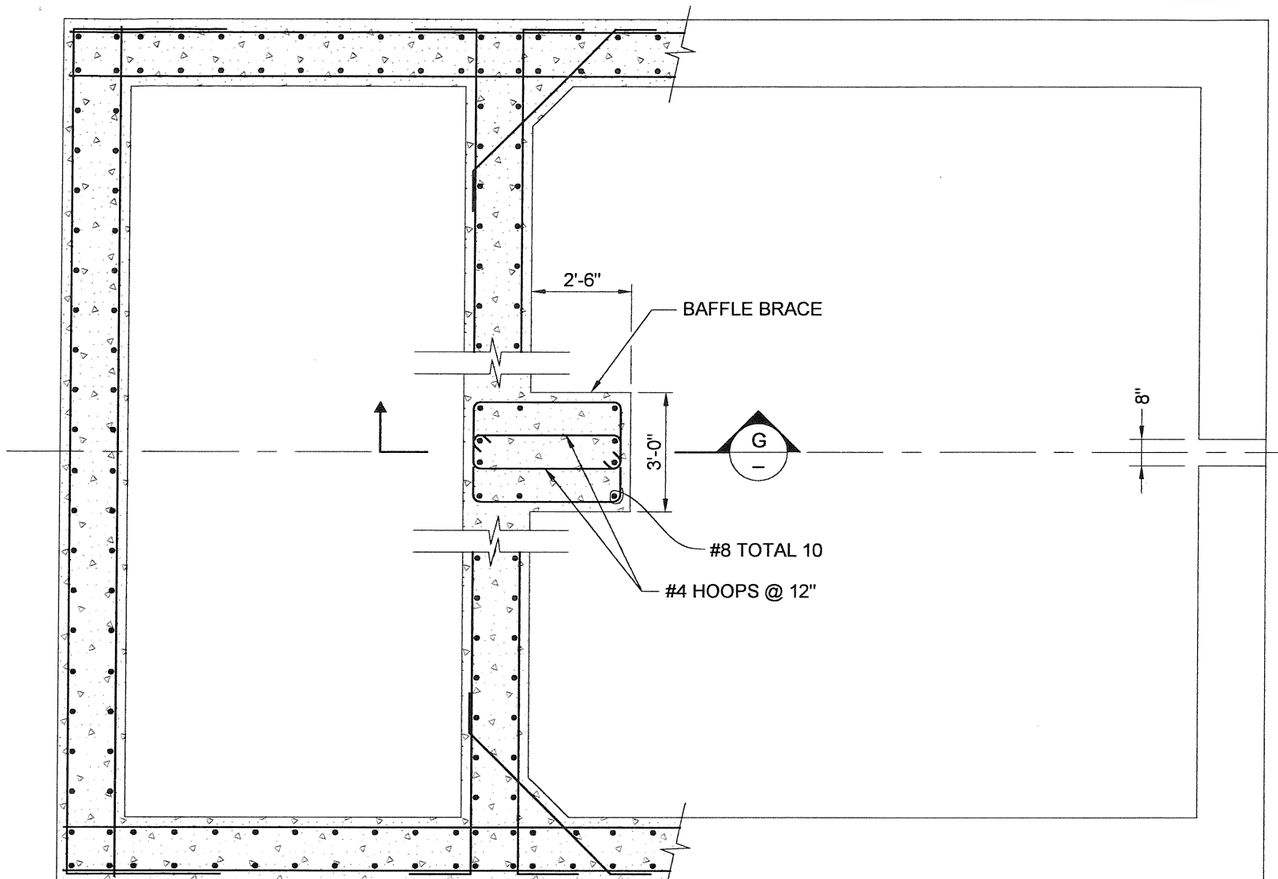

PARTIAL SECTION F / C-25

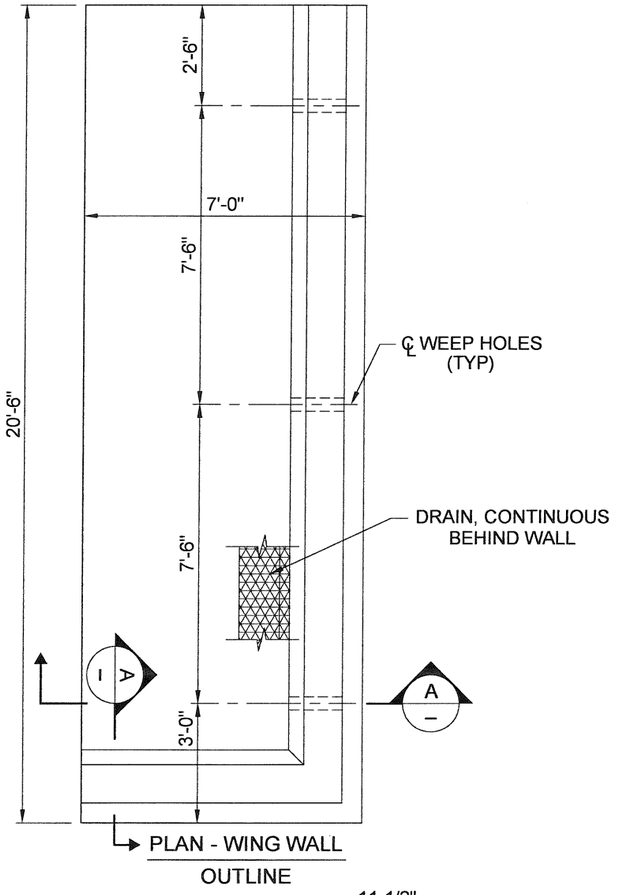

PLAN - WING WALL OUTLINE

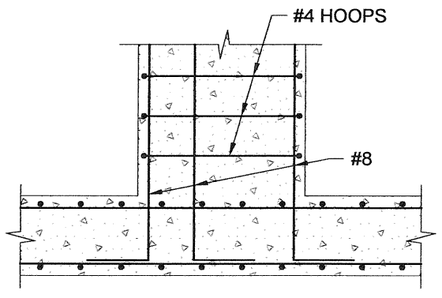

PARTIAL SECTION G / –

DRAFT - 90% REVIEW

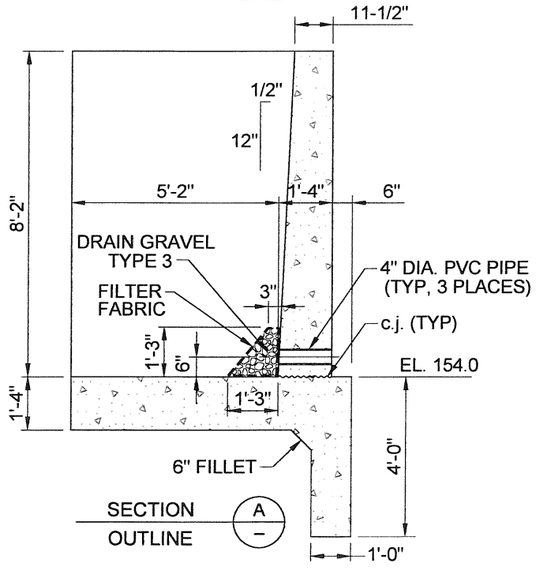

SECTION A / – OUTLINE

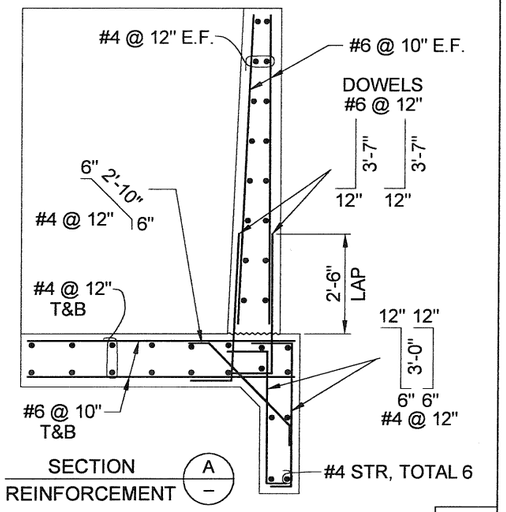

SECTION A / – REINFORCEMENT

C-26

REVISIONS			
NO.	DESCRIPTION	BY	DATE

DES.:	A.T.
DRAWN:	P.Y.M.
CHKD.:	R.S.
DATE:	08-16-10
SCALE:	1" = 2'-0"
FLD. BK.	XXXX

REGISTERED PROFESSIONAL ENGINEER — ALBERTO PUCCINELLI — No. 37051 — EXP — CIVIL — STATE OF CALIFORNIA

PROJECT ENGINEER

PLANS APPROVAL DATE

GEI Consultants

CONTRA COSTA COUNTY
PUBLIC WORKS DEPARTMENT
255 GLACIER DRIVE
MARTINEZ, CALIFORNIA 94553

0 2' 4'
SCALE, FEET

FOR REDUCED PLANS ORIGINAL SCALE IS IN INCHES
0 1 2 3

BASE MAP	EAST COORD.	NORTH COORD.
L23	1635	528

UPPER SAND CREEK DETENTION BASIN

OUTLET WORKS -
OUTLET ENERGY DISSIPATOR - STRUCTURAL REINFORCEMENT (Sheet 2 of 2)

FILE NO. FD-3210

SHEET XX OF YY

CADD FILE# C-25.dwg

PEN TBL. GEIWALKER.ctb

C-26 08-16-10 PYM

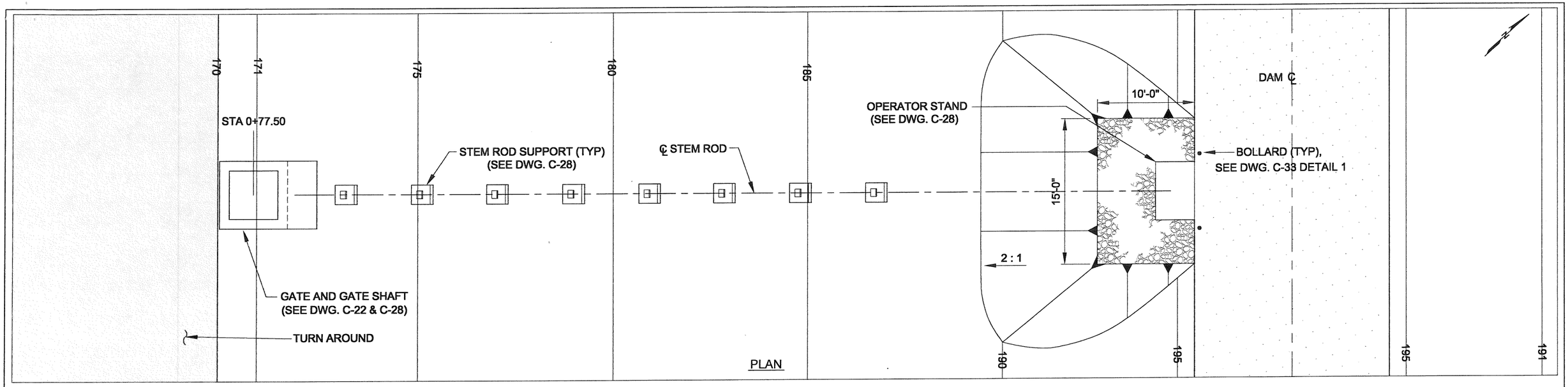

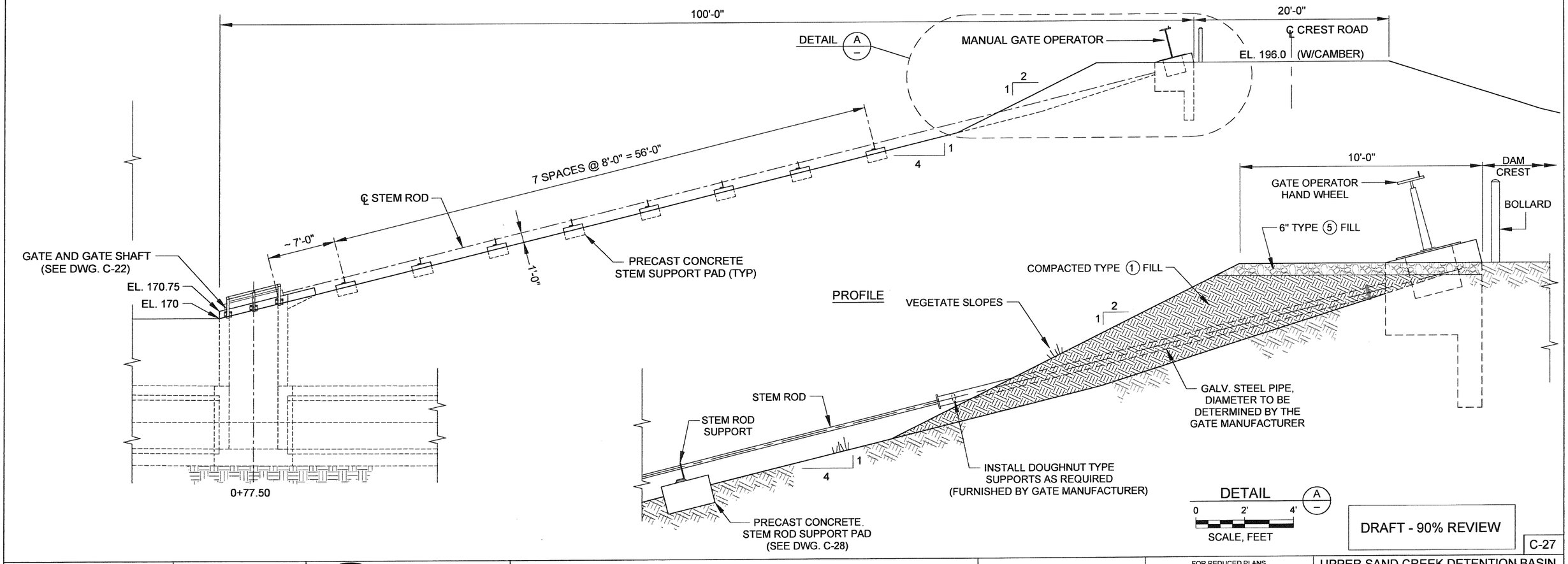

DRAFT - 90% REVIEW

C-27

REVISIONS			
NO.	DESCRIPTION	BY	DATE

DES.: A.T.
DRAWN: P.Y.M.
CHKD.: R.S.
DATE: 08-16-10
SCALE: 1" = 5' AND NOTED
FLD. BK. xxxx

REGISTERED PROFESSIONAL ENGINEER ALBERTO PUJOL-RIVE No. 37051 EXP CIVIL STATE OF CALIFORNIA

PROJECT ENGINEER

PLANS APPROVAL DATE

GEI Consultants

CONTRA COSTA COUNTY
PUBLIC WORKS DEPARTMENT
255 GLACIER DRIVE
MARTINEZ, CALIFORNIA 94553

0 5 10
SCALE, FEET
AND NOTED

FOR REDUCED PLANS
ORIGINAL SCALE IS IN INCHES
0 1 2 3

BASE MAP	EAST COORD.	NORTH COORD.
L23	1635	528

UPPER SAND CREEK DETENTION BASIN

OUTLET WORKS -
GATE OPERATOR PLAN AND PROFILE

FILE NO. FD-3210

SHEET XX OF YY

CADD FILE# C-27.dwg

PEN TBL: GEIWALKER.ctb

C-XX 08-16-10 PYM

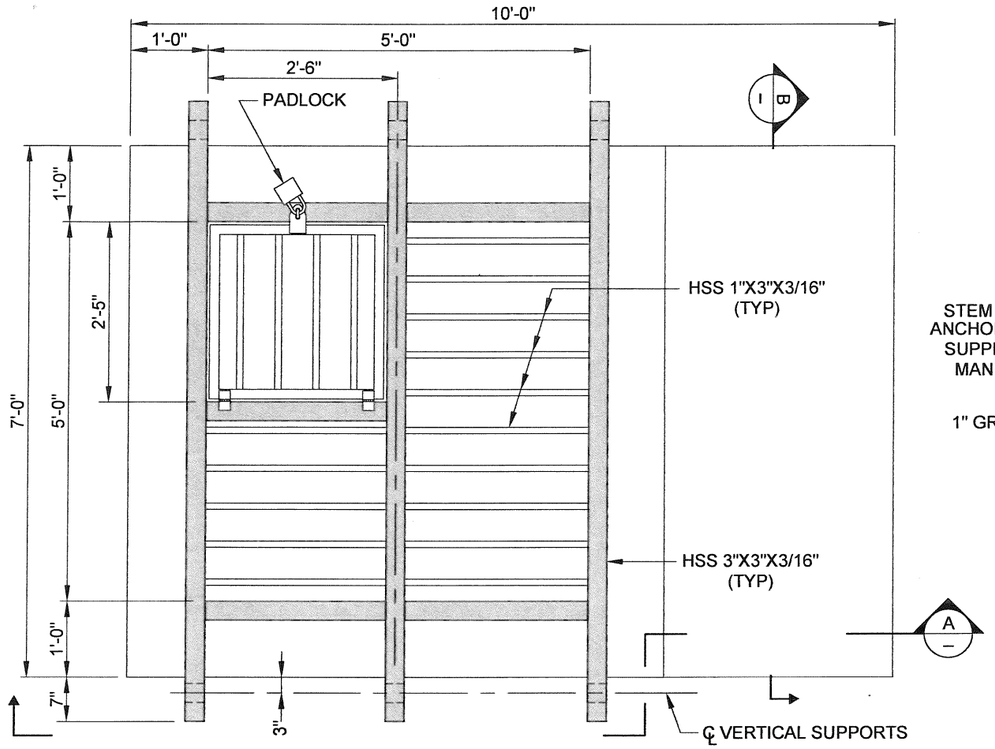

PLAN VIEW - SAFETY RACK

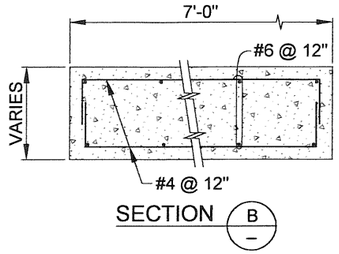

SECTION B

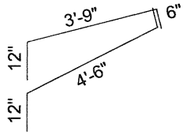

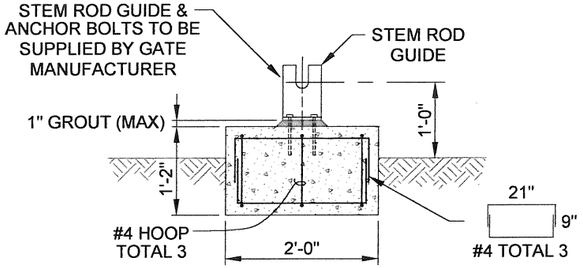

PRECAST BLOCK SECTION C

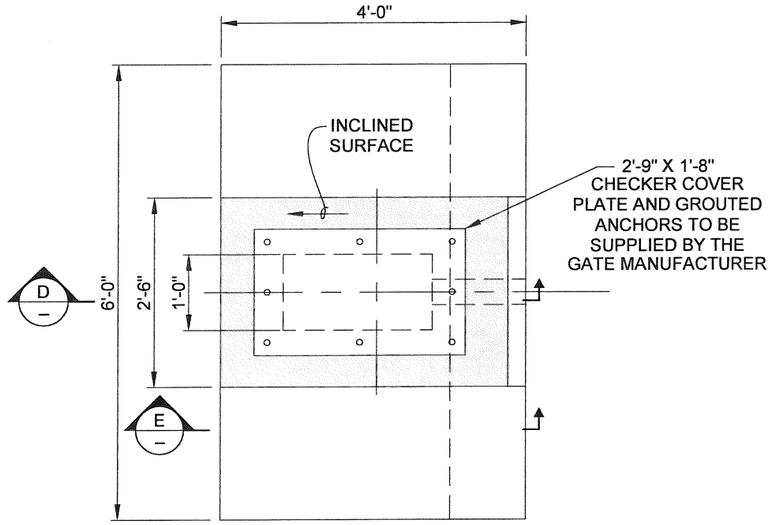

PLAN - OPERATOR STAND

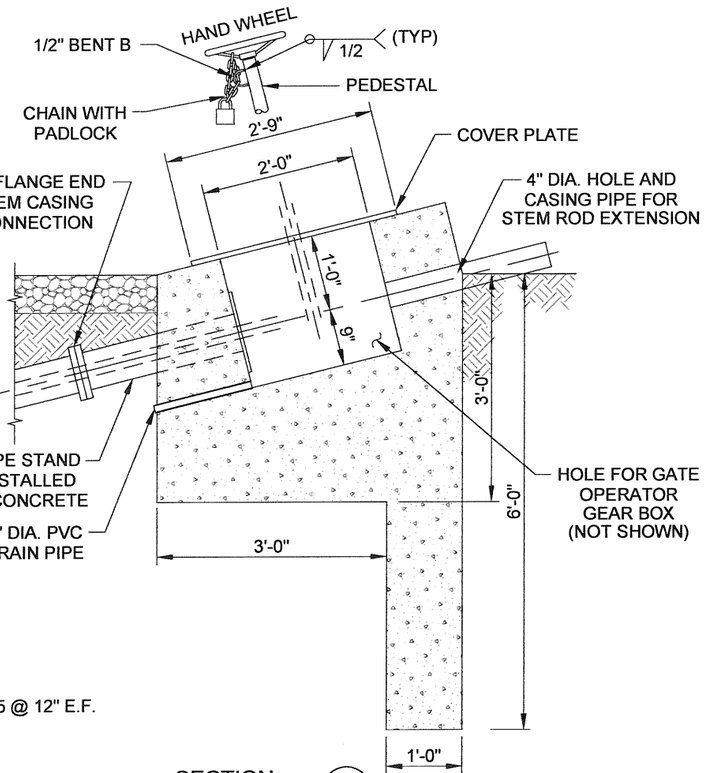

SECTION D

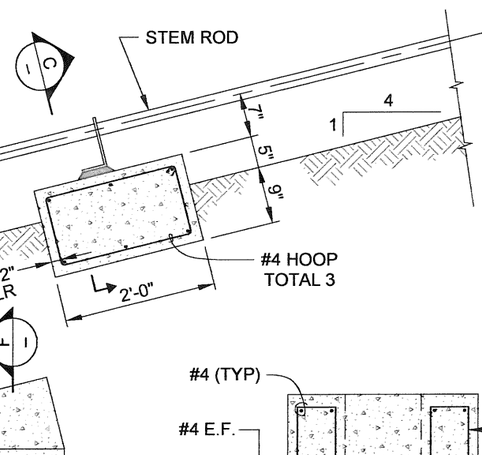

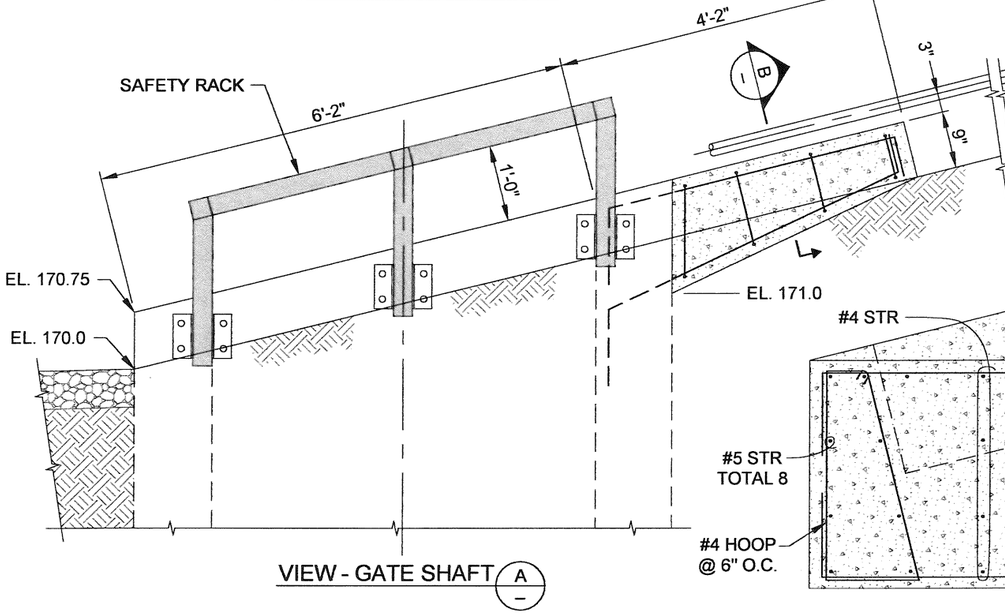

VIEW - GATE SHAFT A

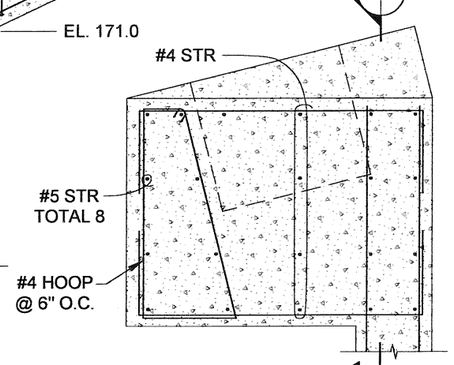

SECTION E

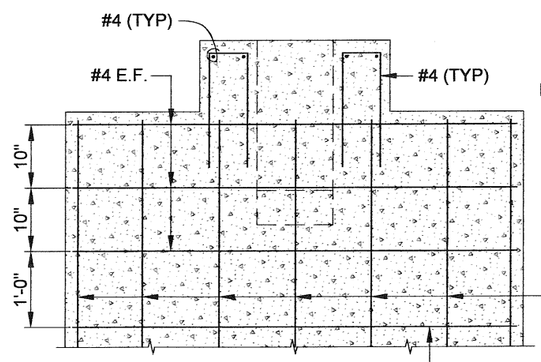

SECTION F

DRAFT - 90% REVIEW

C-28

REVISIONS			
NO.	DESCRIPTION	BY	DATE

DES.:	A.T.
DRAWN:	P.Y.M.
CHKD.:	R.S.
DATE:	08-16-10
SCALE:	1" = 1'
FLD. BK.	xxxx

REGISTERED PROFESSIONAL ENGINEER ALBERTO PUEBLA RIOS No. 37051 EXP. CIVIL STATE OF CALIFORNIA

PROJECT ENGINEER

PLANS APPROVAL DATE

GEI Consultants

CONTRA COSTA COUNTY
PUBLIC WORKS DEPARTMENT
255 GLACIER DRIVE
MARTINEZ, CALIFORNIA 94553

0 1' 2'
SCALE, FEET

FOR REDUCED PLANS ORIGINAL SCALE IS IN INCHES
0 1 2 3

BASE MAP	EAST COORD.	NORTH COORD.
L23	1635	528

UPPER SAND CREEK DETENTION BASIN

OUTLET WORKS - GATE OPERATOR PLATFORM AND DETAILS

FILE NO. FD-3210

SHEET XX OF YY

CADD FILE# C-28.dwg

PEN TBL. GEIWALKER.ctb

C-28 08-16-10 PYM

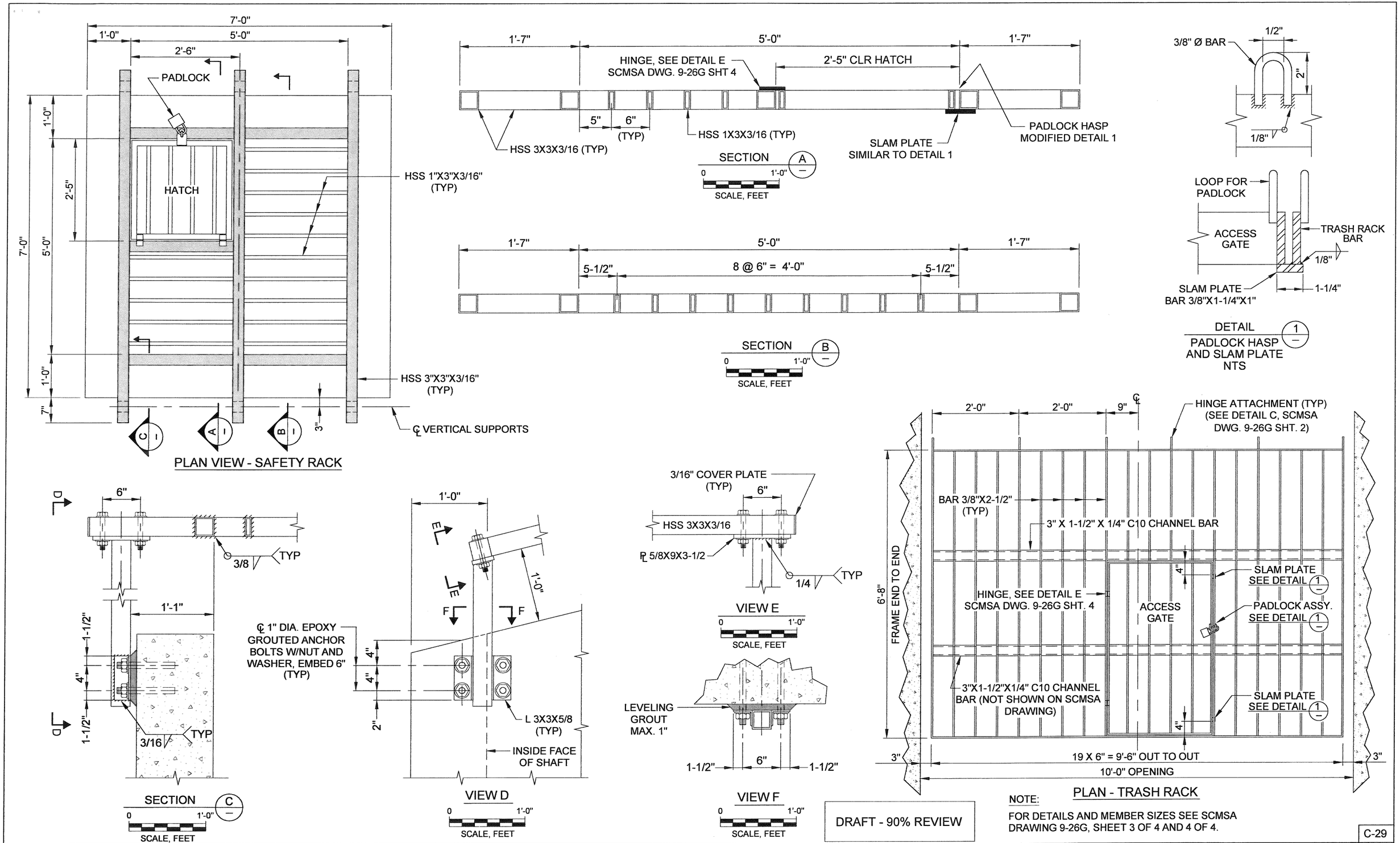

DRAFT - 90% REVIEW

NOTE:

FOR DETAILS AND MEMBER SIZES SEE SCMSA DRAWING 9-26G, SHEET 3 OF 4 AND 4 OF 4.

C-29

REVISIONS			
NO.	DESCRIPTION	BY	DATE

DES.: A.T.
DRAWN: P.Y.M.
CHKD.: R.S.
DATE: 08-16-10
SCALE: 1" = 1' AND NOTED
FLD. BK. XXXX

REGISTERED PROFESSIONAL ENGINEER ALBERTO PUIOL-RIUS No. 37051 EXP CIVIL STATE OF CALIFORNIA

PROJECT ENGINEER

PLANS APPROVAL DATE

GEI Consultants

CONTRA COSTA COUNTY
PUBLIC WORKS DEPARTMENT
255 GLACIER DRIVE
MARTINEZ, CALIFORNIA 94553

0 1' 2'
SCALE, FEET AND NOTED

FOR REDUCED PLANS ORIGINAL SCALE IS IN INCHES
0 1 2 3

BASE MAP	EAST COORD.	NORTH COORD.
L23	1635	528

UPPER SAND CREEK DETENTION BASIN

OUTLET WORKS - MISCELLANEOUS STEEL DETAILS

FILE NO. FD-3210

SHEET XX OF YY

CADD FILE# C-29.dwg

PEN TBL: GEIWALKER.ctb

C-29 08-17-10 PYM

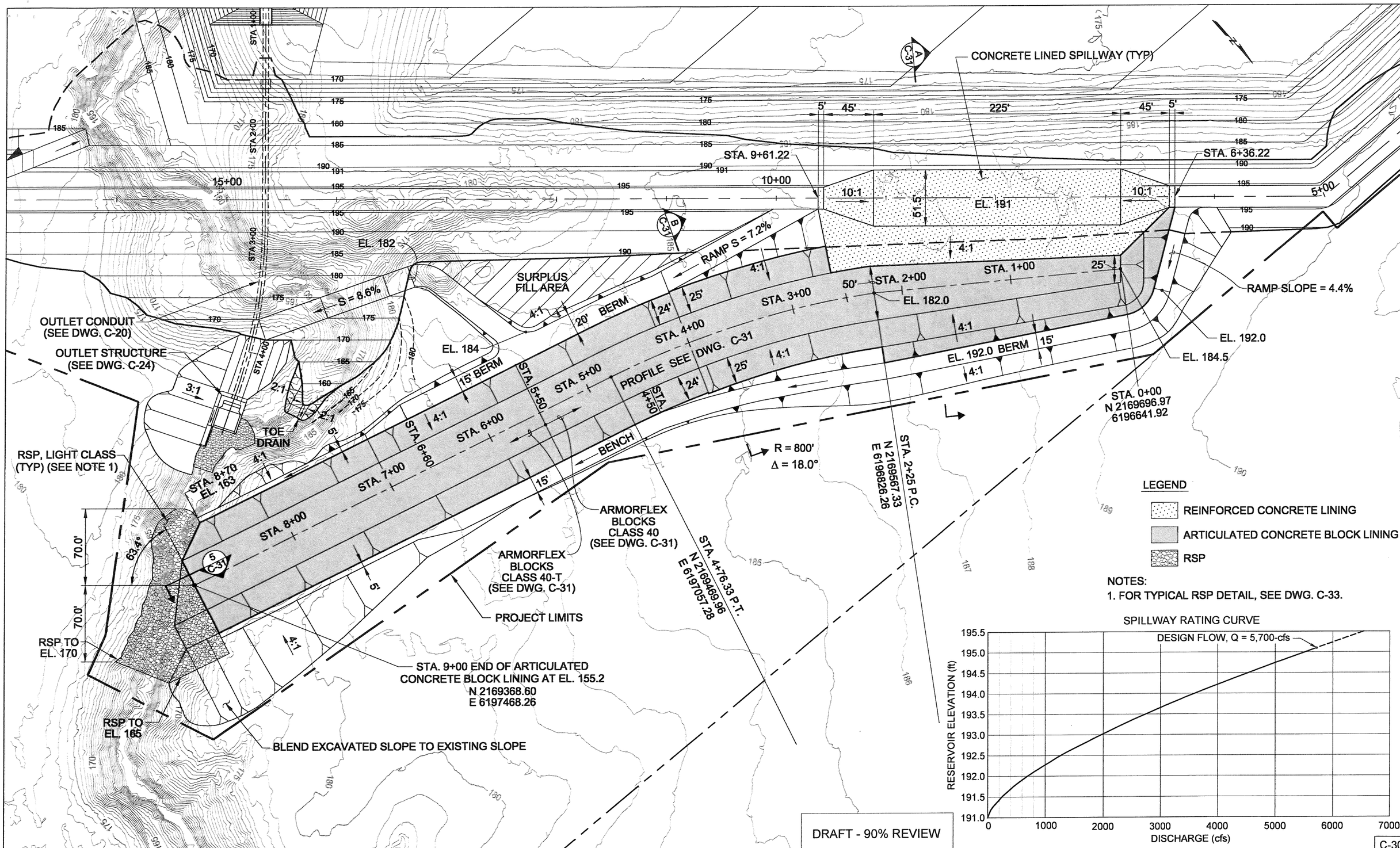

REVISIONS			
NO.	DESCRIPTION	BY	DATE

DES.: A.T.
DRAWN: P.Y.M.
CHKD.: R.S.
DATE: 08-16-10
SCALE: 1" = 40'
FLD. BK. xxxx

REGISTERED PROFESSIONAL ENGINEER ALBERTO PUJOL-RIUS No. 37051 EXP CIVIL STATE OF CALIFORNIA

PROJECT ENGINEER

PLANS APPROVAL DATE

GEI Consultants

CONTRA COSTA COUNTY
PUBLIC WORKS DEPARTMENT
255 GLACIER DRIVE
MARTINEZ, CALIFORNIA 94553

0 40 80
SCALE, FEET

FOR REDUCED PLANS ORIGINAL SCALE IS IN INCHES
0 1 2 3

BASE MAP	EAST COORD.	NORTH COORD.
L23	1635	528

UPPER SAND CREEK DETENTION BASIN

EMERGENCY SPILLWAY - PLAN & RATING CURVE

FILE NO. FD-3210 SHEET XX OF YY

CADD FILE# C-30.dwg PEN TBL: GEIWALKER.ctb

C-30 08-16-10 PYM

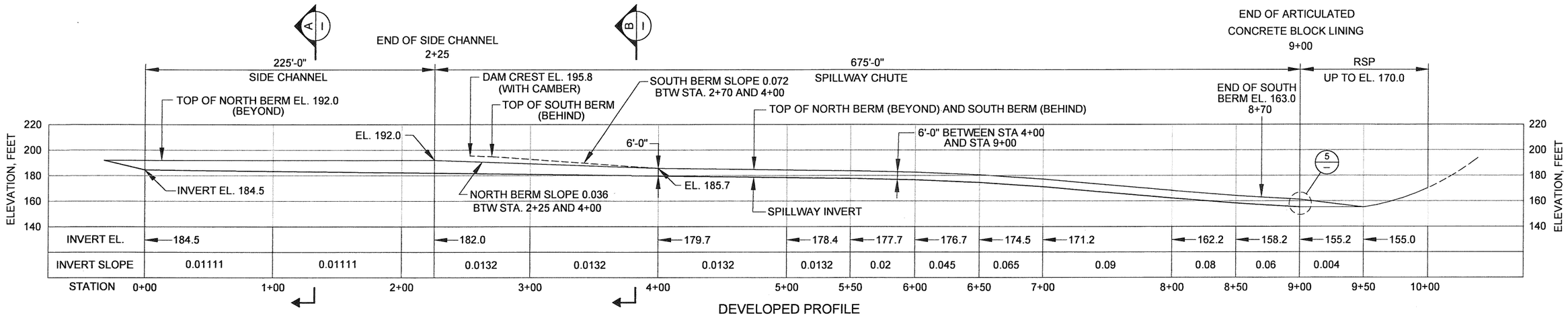

DEVELOPED PROFILE

0 40' 80'

SCALE, FEET

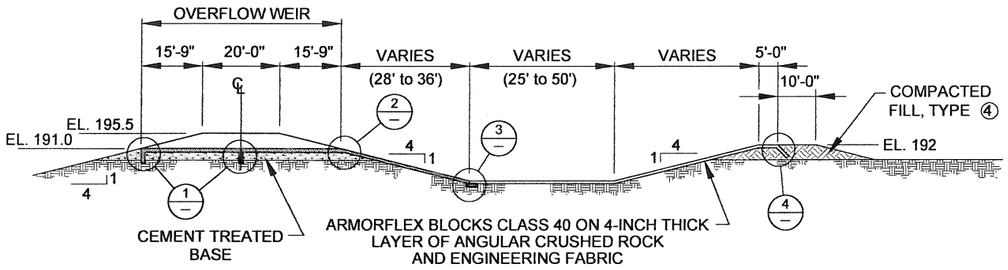

SIDE CHANNEL TYPICAL SECTION A C-30

0 20' 40'

SCALE, FEET

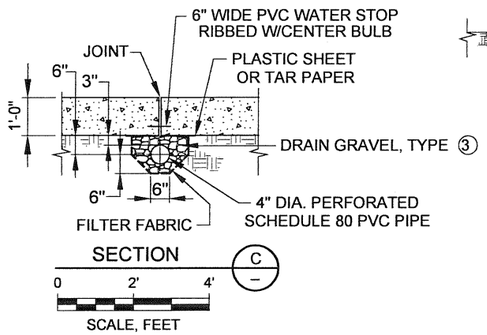

SECTION C C-30

0 2' 4'

SCALE, FEET

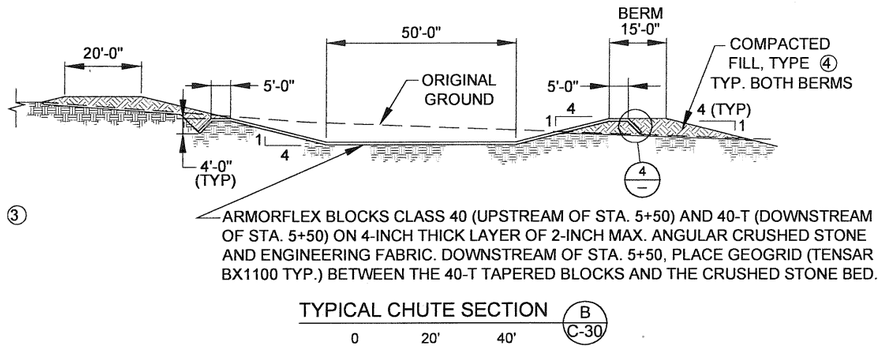

ARMORFLEX BLOCKS CLASS 40 (UPSTREAM OF STA. 5+50) AND 40-T (DOWNSTREAM OF STA. 5+50) ON 4-INCH THICK LAYER OF 2-INCH MAX. ANGULAR CRUSHED STONE AND ENGINEERING FABRIC. DOWNSTREAM OF STA. 5+50, PLACE GEOGRID (TENSAR BX1100 TYP.) BETWEEN THE 40-T TAPERED BLOCKS AND THE CRUSHED STONE BED.

TYPICAL CHUTE SECTION B C-30

0 20' 40'

SCALE, FEET

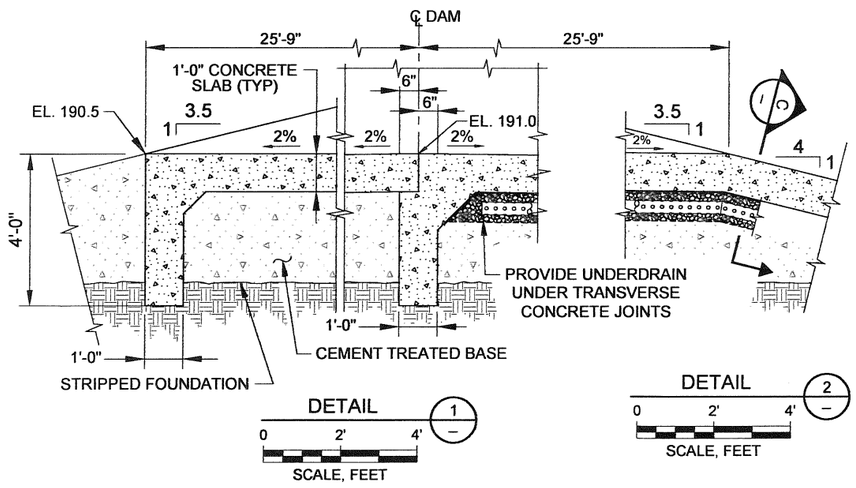

DETAIL 1 C-30

0 2' 4'

SCALE, FEET

DETAIL 2 C-30

0 2' 4'

SCALE, FEET

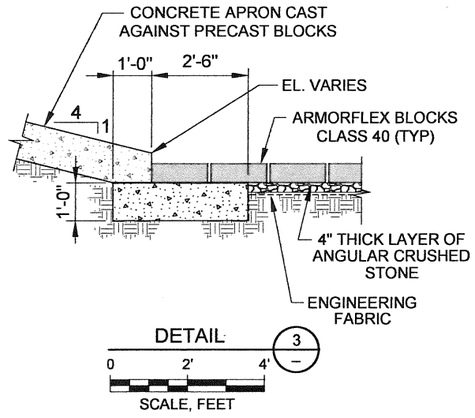

DETAIL 3 C-30

0 2' 4'

SCALE, FEET

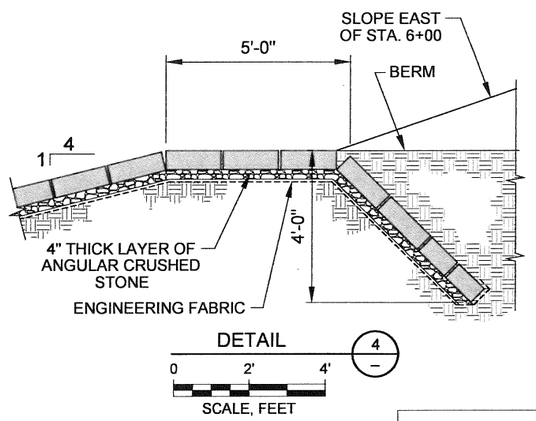

DETAIL 4 C-30

0 2' 4'

SCALE, FEET

NOTES:

1. FOR TYPICAL RSP DETAIL SEE DWG. C-33.

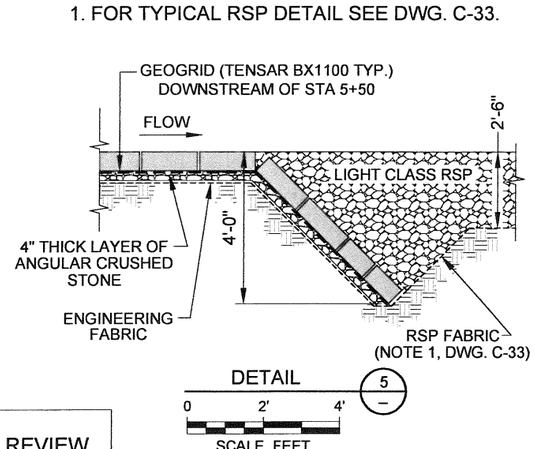

DETAIL 5 C-30

0 2' 4'

SCALE, FEET

DRAFT - 90% REVIEW

C-31

REVISIONS				DES.: A.T.	PROJECT ENGINEER	CONTRA COSTA COUNTY PUBLIC WORKS DEPARTMENT 255 GLACIER DRIVE MARTINEZ, CALIFORNIA 94553	0 4' 8' SCALE, FEET	FOR REDUCED PLANS ORIGINAL SCALE IS IN INCHES 0 1 2 3	UPPER SAND CREEK DETENTION BASIN
NO.	DESCRIPTION	BY	DATE	DRAWN: P.Y.M.					EMERGENCY SPILLWAY - PROFILE, SECTIONS & DETAILS
				CHKD.: R.S.	PLANS APPROVAL DATE			BASE MAP L23 / EAST COORD. 1635 / NORTH COORD. 528	FILE NO. FD-3210 / SHEET XX OF YY
				DATE: 08-16-10					CADD FILE# C-31.dwg / PEN TBL. GEIWALKER.ctb
				SCALE: 1" = 40'					
				FLD. BK. XXXX					

REGISTERED PROFESSIONAL ENGINEER ALBERTO PUCK-RUIZ No. 37051 EXP CIVIL STATE OF CALIFORNIA

GEI Consultants

C-31 08-17-10 PYM

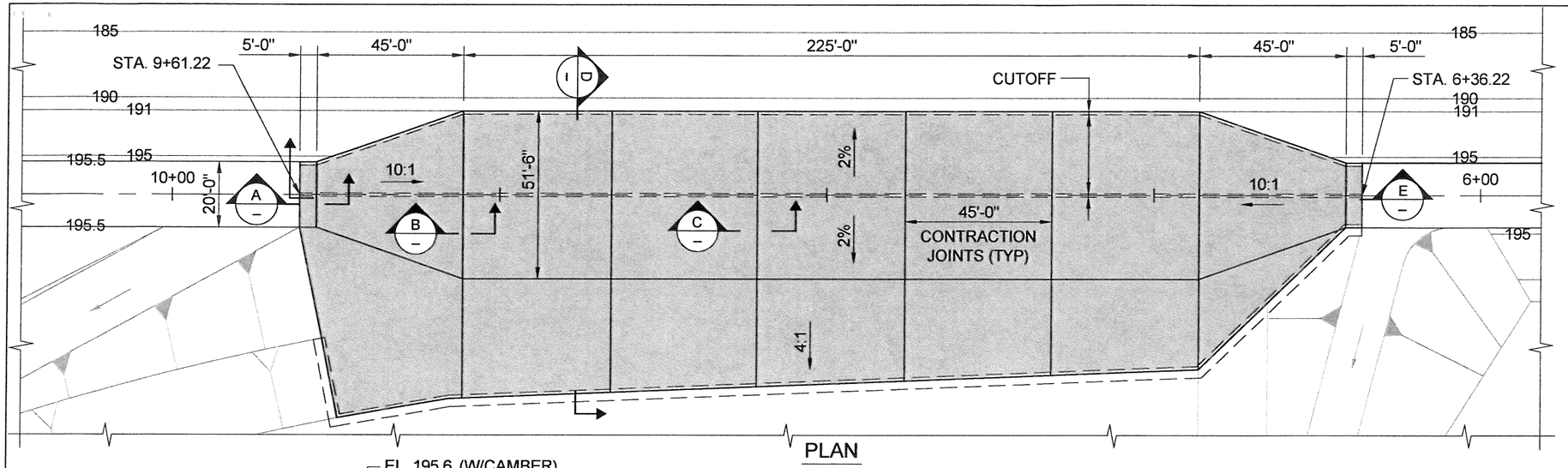

PLAN

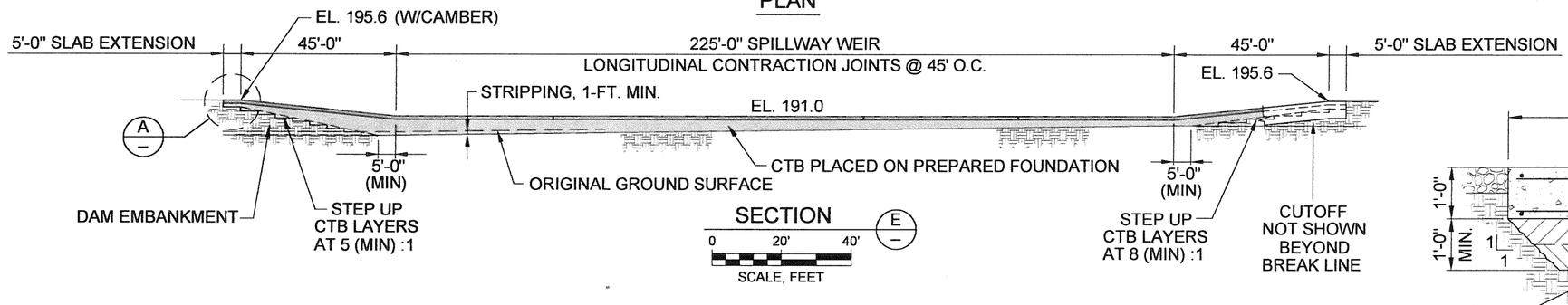

SECTION E
0 20' 40'
SCALE, FEET

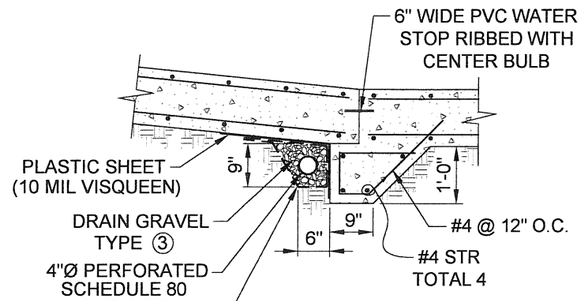

SECTION B
0 1' 2'
SCALE, FEET
3/4" = 1'-0"

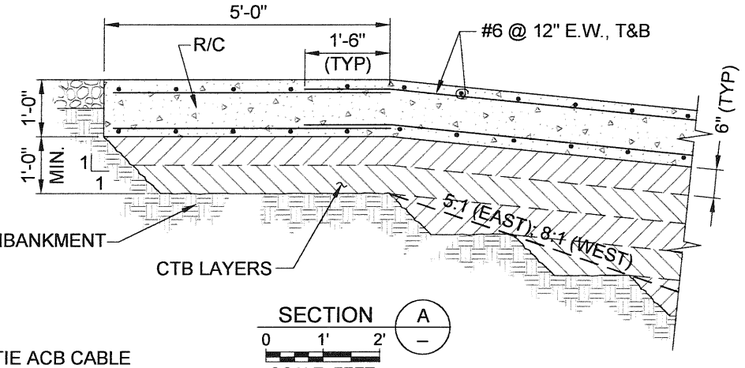

SECTION A
0 1' 2'
SCALE, FEET
3/4" = 1'-0"

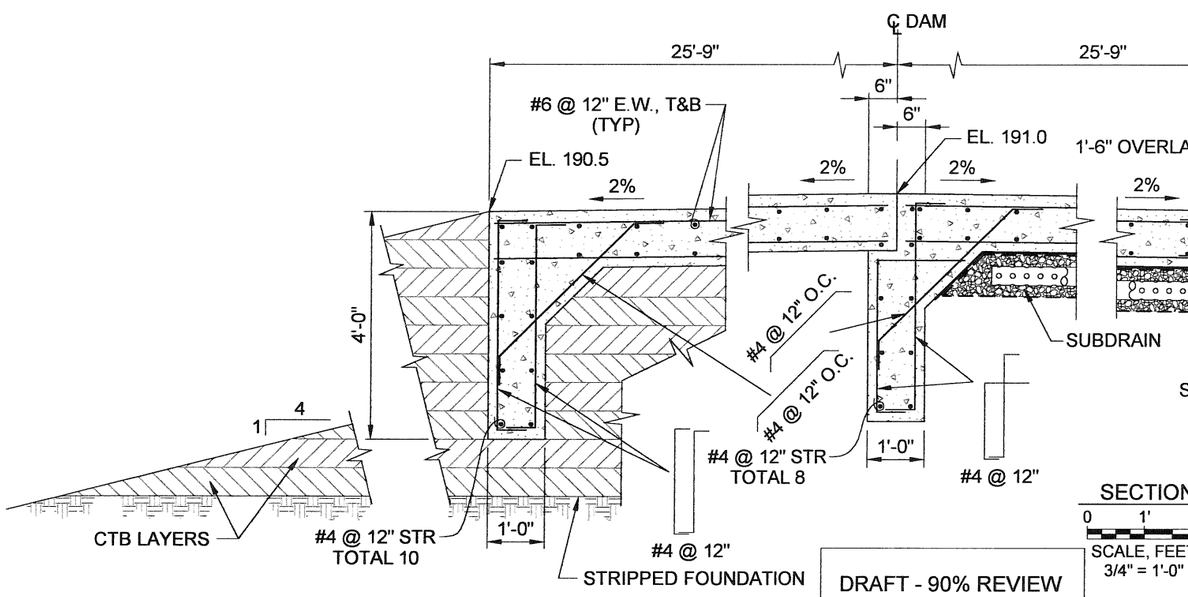

SECTION D
0 1' 2'
SCALE, FEET
3/4" = 1'-0"

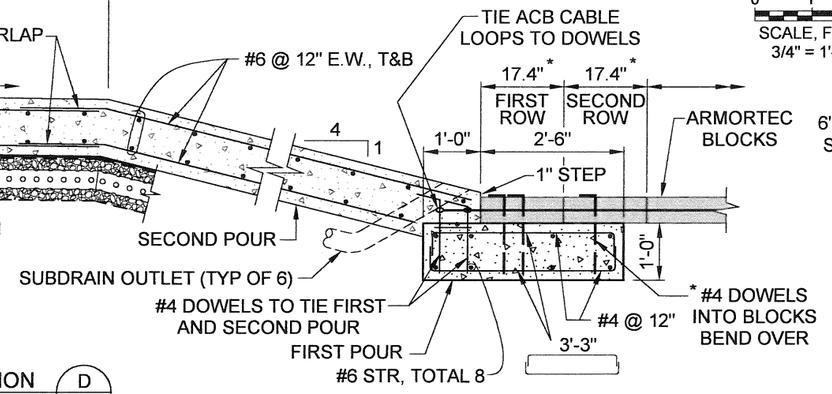

* SPACING OF THE DOWELS IN TRANSVERSE DIRECTION IS SET BY THE WIDTH OF BLOCKS (15.5"). LONGITUDINAL SPACING WILL BE ESTABLISHED TO HAVE TWO DOWELS THROUGH FIRST ROW AND ONE DOWEL THROUGH SECOND ROW OF BLOCKS.

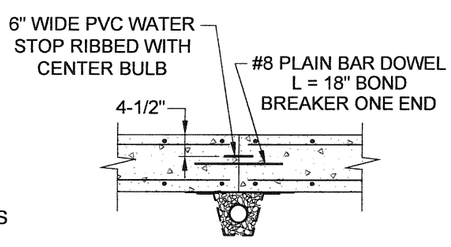

SECTION C
0 1' 2'
SCALE, FEET
3/4" = 1'-0"

DRAFT - 90% REVIEW

C-32

REVISIONS			
NO.	DESCRIPTION	BY	DATE

DES.:	A.T.
DRAWN:	P.Y.M.
CHKD.:	R.S.
DATE:	08-16-10
SCALE:	AS NOTED
FLD. BK.	xxxx

REGISTERED PROFESSIONAL ENGINEER ALBERTO PUJOL-RIUS No. 37051 EXP C/V/L STATE OF CALIFORNIA

PROJECT ENGINEER

PLANS APPROVAL DATE

GEI Consultants

CONTRA COSTA COUNTY
PUBLIC WORKS DEPARTMENT
255 GLACIER DRIVE
MARTINEZ, CALIFORNIA 94553

0 2' 4'
SCALE, FEET
(AND OTHERWISE NOTED)

FOR REDUCED PLANS
ORIGINAL SCALE IS IN INCHES
0 1 2 3

BASE MAP	EAST COORD.	NORTH COORD.
L23	1635	528

UPPER SAND CREEK DETENTION BASIN

EMERGENCY SPILLWAY -
WEIR SECTIONS & REINFORCEMENT

FILE NO. FD-3210

SHEET XX OF YY

CADD FILE# C-32.dwg

PEN TBL: GEIWALKER.ctb

C-32 08-17-10 PYM

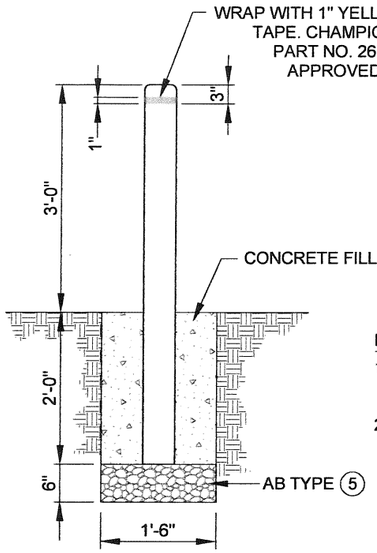

BOLLARD DETAIL

0 1 2

SCALE, FEET

BOLLARD NOTES:

1. BOLLARDS SHALL BE FABRICATED FROM 5" OUTER DIAMETER SCHEDULE 80 STEEL PIPE WITH DOMED TOP.
2. BOLLARDS SHALL BE POWDER COATED AS PER MANUFACTURER'S RECOMMENDATIONS AND SHALL BE BROWN IN COLOR.

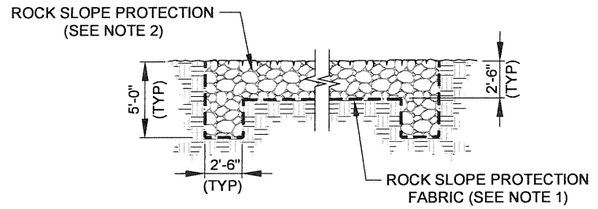

SECTION A — N.T.S.

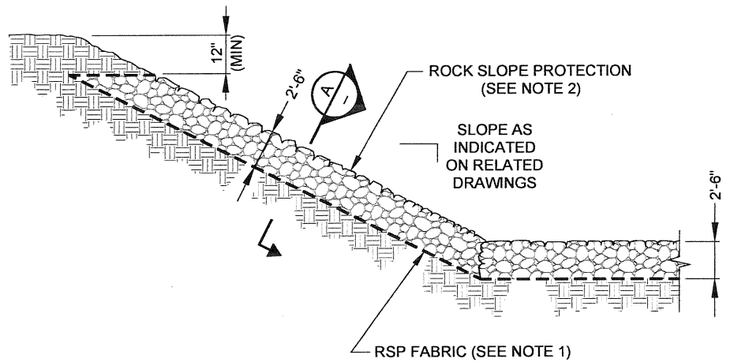

TYPICAL DETAIL

ROCK SLOPE PROTECTION

N.T.S.

NOTES

1. ROCK SLOPE PROTECTION FABRIC SHALL BE TYPE B IN ACCORDANCE WITH SECTION 88 AND PLACED IN ACCORDANCE WITH SECTION 72-2 OF THE STATE STANDARD SPECIFICATIONS.
2. ROCK SLOPE PROTECTION SHALL BE "LIGHT" CLASS IN ACCORDANCE WITH SECTION 72-2.02 OF THE STATE STANDARD SPECIFICATIONS.

DRAFT - 90% REVIEW

C-33

C-33 08-17-10 PYM

REVISIONS			
NO.	DESCRIPTION	BY	DATE

DES.: AT
DRAWN: PYM
CHKD.: KVS
DATE: 08-16-10
SCALE: 1" = 10'
FLD. BK. xxxx

REGISTERED PROFESSIONAL ENGINEER — ALBERTO PUDE-RIOS — No. 37051 EXP — CIVIL — STATE OF CALIFORNIA

PROJECT ENGINEER

PLANS APPROVAL DATE

GEI Consultants

CONTRA COSTA COUNTY
PUBLIC WORKS DEPARTMENT
255 GLACIER DRIVE
MARTINEZ, CALIFORNIA 94553

0 10 20

SCALE, FEET
(AND NOTED)

FOR REDUCED PLANS ORIGINAL SCALE IS IN INCHES
0 1 2 3

BASE MAP	EAST COORD.	NORTH COORD.
L23	1635	528

UPPER SAND CREEK DETENTION BASIN

SLOPE PROTECTION DETAILS

FILE NO. FD-3210

SHEET XX OF YY

CADD FILE# C-33.dwg

PEN TBL: GEIWALKER.ctb

APPROX. TOP OF STRUCTURE FOUNDATION EXCAVATION (TYP)

PROVIDE 13'-6" METAL BEAM GUARD RAILING WITH END CAP (4 PLACES)

A77A2 S

A77B1 S

SLOPE TRANSITIONS 2.5:1 TO 3:1

1 C-41

2 C-41

3 C-41

4 C-41

5 C-41

6 C-49

2H:1V

EL. 187.5

WALL DRAIN (SEE DWG. C-43)

6-1/3 H:1V

EL. 176.0

EL. 175.8

EL. 175.0

EL. 163.0

EL. 162.50

EL. 162.5

EL. 165.0

15'-0"

25'-0"

SLOPE

ACCESS AND MAINTENANCE RAMP

CONFORM RSP TO EXISTING SLOPE (TYP)

N 2168400

E 6195600

FOR TYP. RSP DETAIL SEE DWG. C-21

35'-0"

RSP, LIGHT CLASS

N 2168401.54
E 6195678.11

APPROACH SLAB NOT SHOWN

BRIDGE

42+00

SLAB DRAIN (SEE DWG. C-43)

170'-0"

CHUTE SLAB DRAIN (SEE DWG. C-45)

N 2168423.96
E 6195846.62

RSP, LIGHT CLASS

2:1

E 6195800

N 2168400

44'-0"

20'-0"

CONFORM SLOPE TO EXIST. SLOPE

EL. 180.0

EL. 176.0

EL. 175.8

EL. 163.0

EL. 175.0

WALL DRAIN (SEE DWG. C-43)

APPROACH SLAB NOT SHOWN

2.5:1

1% SLOPE

MAINTENANCE ROAD

41+00

EL. 195

SLOPE TRANSITIONS 2.5:1 TO 3:1

NO WORK BEYOND PROJECT BOUNDARY

RAMP

DRAFT - 90% REVIEW

C-40

REVISIONS			
NO.	DESCRIPTION	BY	DATE

DES.: K.V.S.
DRAWN: P.Y.M.
CHKD.: A.T.
DATE: 08-16-10
SCALE: 1" = 10'
FLD. BK. XXXX

REGISTERED PROFESSIONAL ENGINEER ALBERTO PUIG-RIUS No. 37051 EXP. 6/V11 STATE OF CALIFORNIA

PROJECT ENGINEER

PLANS APPROVAL DATE

GEI Consultants

CONTRA COSTA COUNTY
PUBLIC WORKS DEPARTMENT
255 GLACIER DRIVE
MARTINEZ, CALIFORNIA 94553

0 10 20
SCALE, FEET

FOR REDUCED PLANS ORIGINAL SCALE IS IN INCHES
0 1 2 3

BASE MAP	EAST COORD.	NORTH COORD.
L23	1635	528

UPPER SAND CREEK DETENTION BASIN

BASIN INLET STRUCTURE - GENERAL ARRANGEMENT

FILE NO. FD-3210

SHEET XX OF YY

CADD FILE# C-40.dwg

PEN TBL: GEIWALKER.ctb

C-40 08-16-10 PYM

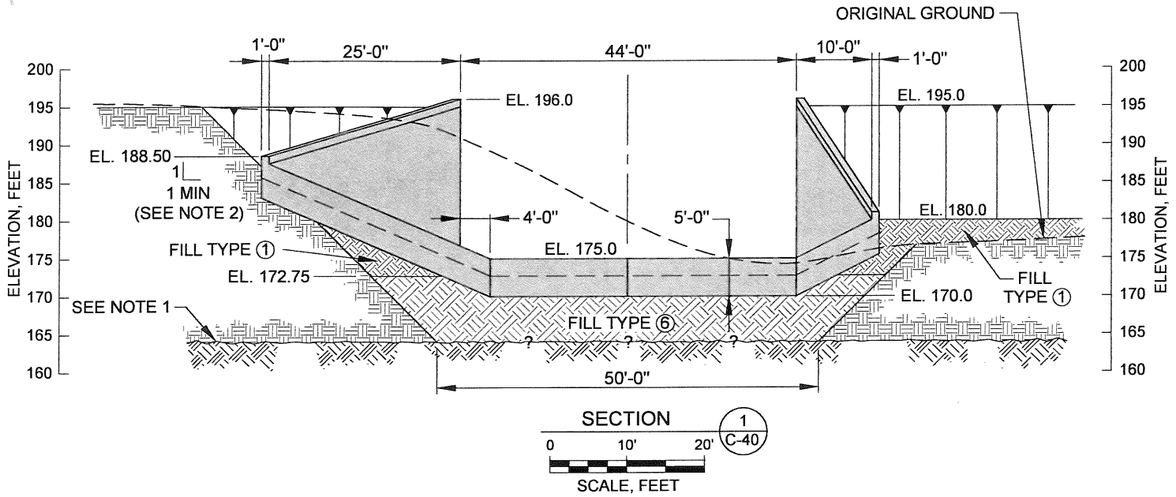

SECTION 1 C-40

0 10' 20'

SCALE, FEET

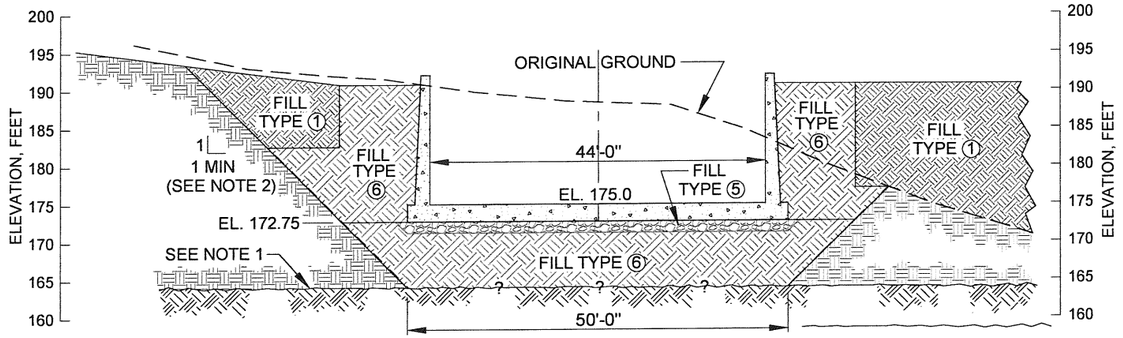

SECTION 4 C-40

0 10' 20'

SCALE, FEET

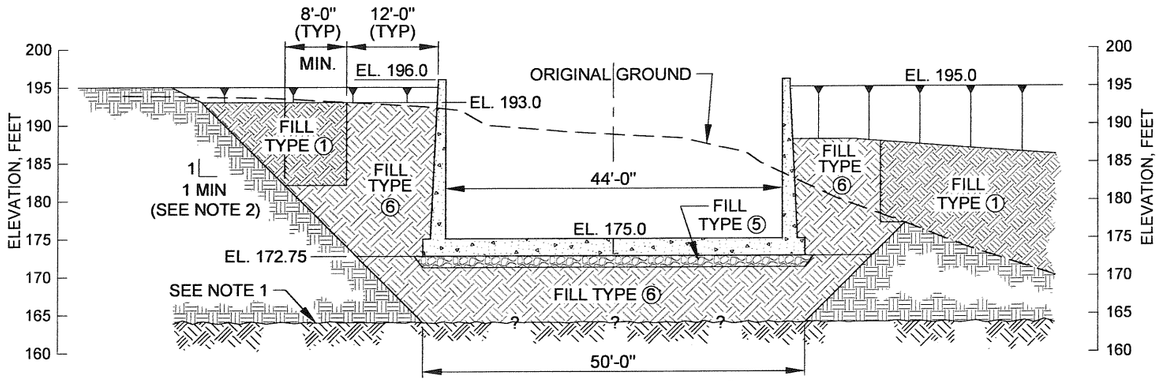

SECTION 2 C-40

0 10' 20'

SCALE, FEET

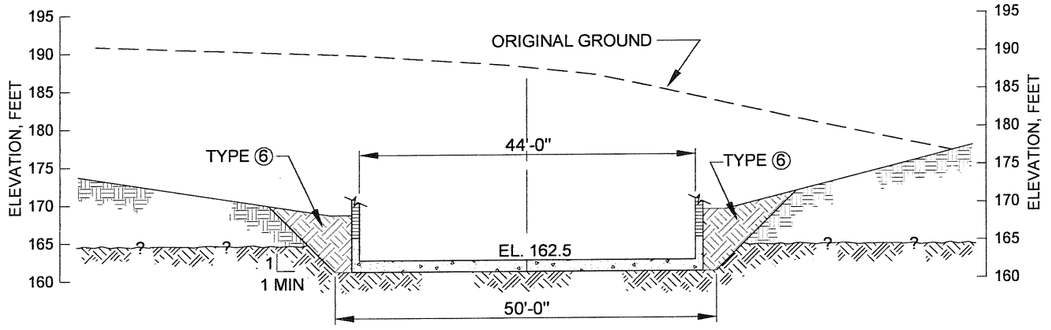

SECTION 5 C-40

0 10' 20'

SCALE, FEET

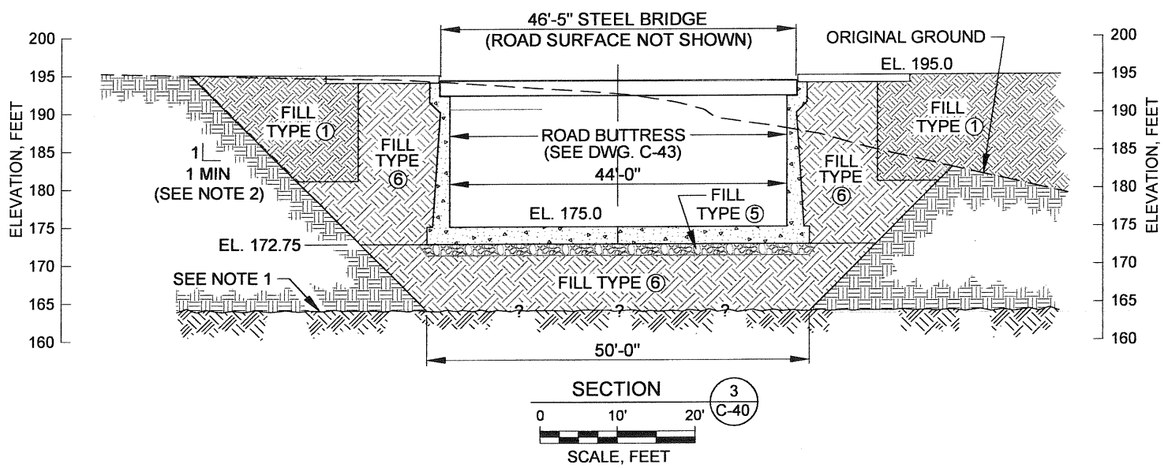

SECTION 3 C-40

0 10' 20'

SCALE, FEET

NOTES:

1. STRUCTURE EXCAVATION SHALL EXTEND TO THE TOP OF WEATHERED BEDROCK (MARKLEY SANDSTONE), OR DEEPER IF REQUIRED BY THE STRUCTURE GEOMETRY (SUCH AS UNDER THE STILLING BASIN).
2. EXCAVATED SLOPES SHOWN ARE STEEPEST ALLOWED. CONTRACTOR SHALL EXCAVATE AT FLATTER SLOPES IF REQUIRED FOR SAFETY OF TEMPORARY EXCAVATION .
3. WALL DRAINS ARE NOT SHOWN.

DRAFT - 90% REVIEW

C-41

REVISIONS			
NO.	DESCRIPTION	BY	DATE

DES.:	A.T.
DRAWN:	P.Y.M.
CHKD.:	K.V.S.
DATE:	08-16-10
SCALE:	1" = 10'-0"
FLD. BK.	xxxx

REGISTERED PROFESSIONAL ENGINEER ALBERTO PUJOL-RIUS No. 37051 EXP CIVIL STATE OF CALIFORNIA

PROJECT ENGINEER

PLANS APPROVAL DATE

GEI Consultants

CONTRA COSTA COUNTY
PUBLIC WORKS DEPARTMENT
255 GLACIER DRIVE
MARTINEZ, CALIFORNIA 94553

0 10' 20'

SCALE, FEET

FOR REDUCED PLANS
ORIGINAL SCALE IS IN INCHES
0 1 2 3

BASE MAP	EAST COORD	NORTH COORD
L23	1635	528

UPPER SAND CREEK DETENTION BASIN

BASIN INLET STRUCTURE -
EXCAVATION AND BACKFILL -
PLAN, SECTIONS & DETAILS

FILE NO. FD-3210

SHEET XX OF YY

CADD FILE# C-41.dwg

PEN TBL. GEIWALKER.ctb

C-41 08-16-10 PYM

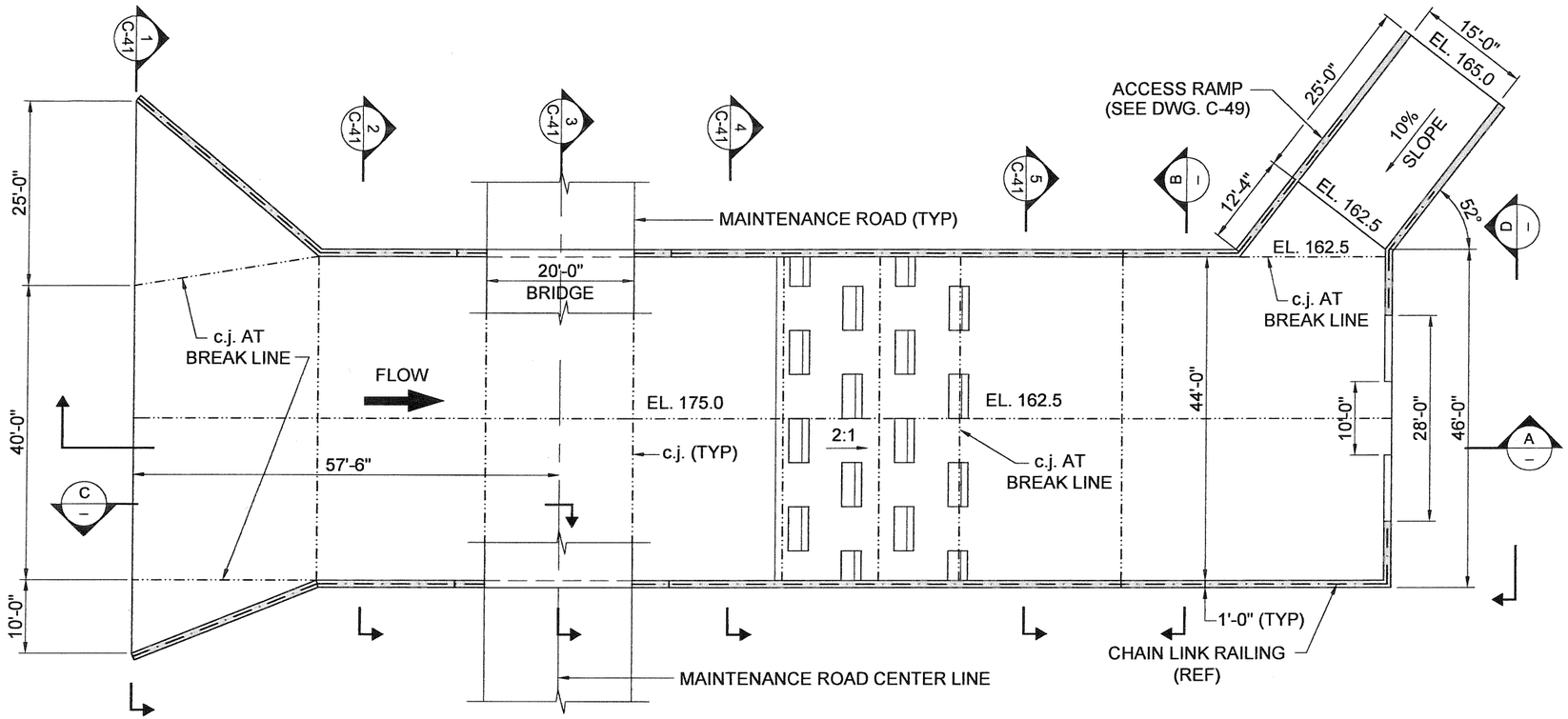

PLAN VIEW - BASIN INLET

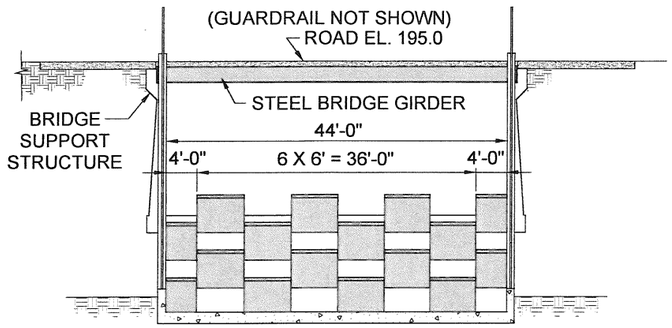

SECTION B

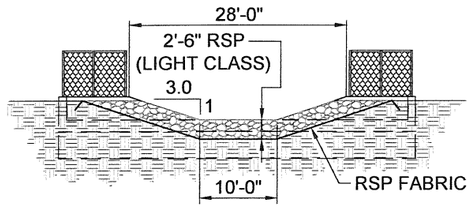

VIEW D

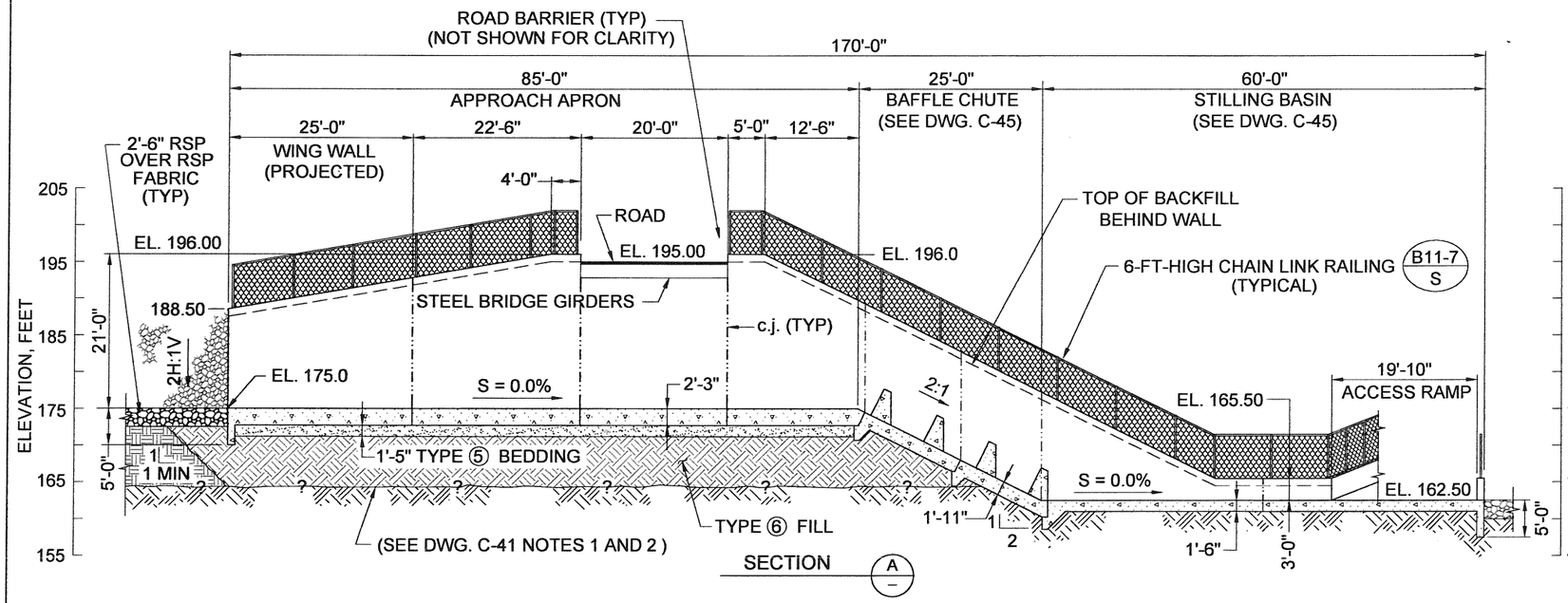

SECTION A

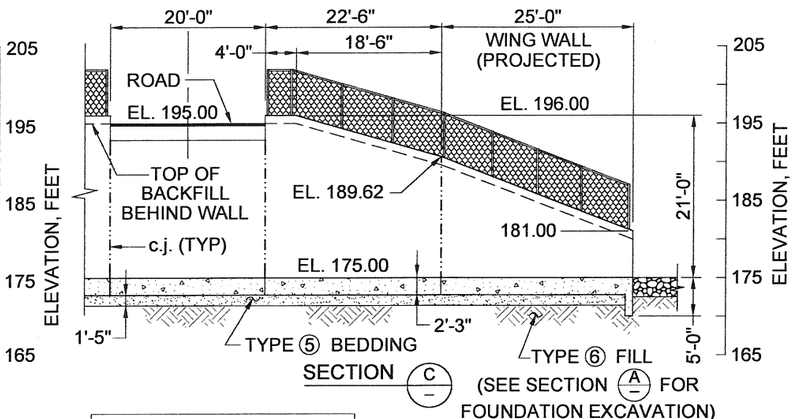

SECTION C

DRAFT - 90% REVIEW

C-42

REVISIONS			
NO.	DESCRIPTION	BY	DATE

DES.:	A.T.
DRAWN:	P.Y.M.
CHKD.:	K.V.S.
DATE:	08-16-10
SCALE:	1" = 10'
FLD. BK.	xxxx

REGISTERED PROFESSIONAL ENGINEER — ALBERTO PUIG-RIUS — No. 37051 EXP — CIVIL — STATE OF CALIFORNIA

PROJECT ENGINEER

PLANS APPROVAL DATE

GEI Consultants

CONTRA COSTA COUNTY
PUBLIC WORKS DEPARTMENT
255 GLACIER DRIVE
MARTINEZ, CALIFORNIA 94553

0 10 20
SCALE, FEET

FOR REDUCED PLANS
ORIGINAL SCALE IS IN INCHES
0 1 2 3

BASE MAP	EAST COORD.	NORTH COORD.
L23	1635	528

UPPER SAND CREEK DETENTION BASIN

BASIN INLET STRUCTURE -
PLAN & PROFILE

FILE NO. FD-3210

SHEET XX OF YY

CADD FILE# C-42.dwg

PEN TBL: GEIWALKER.ctb

C-42 08-16-10 PYM

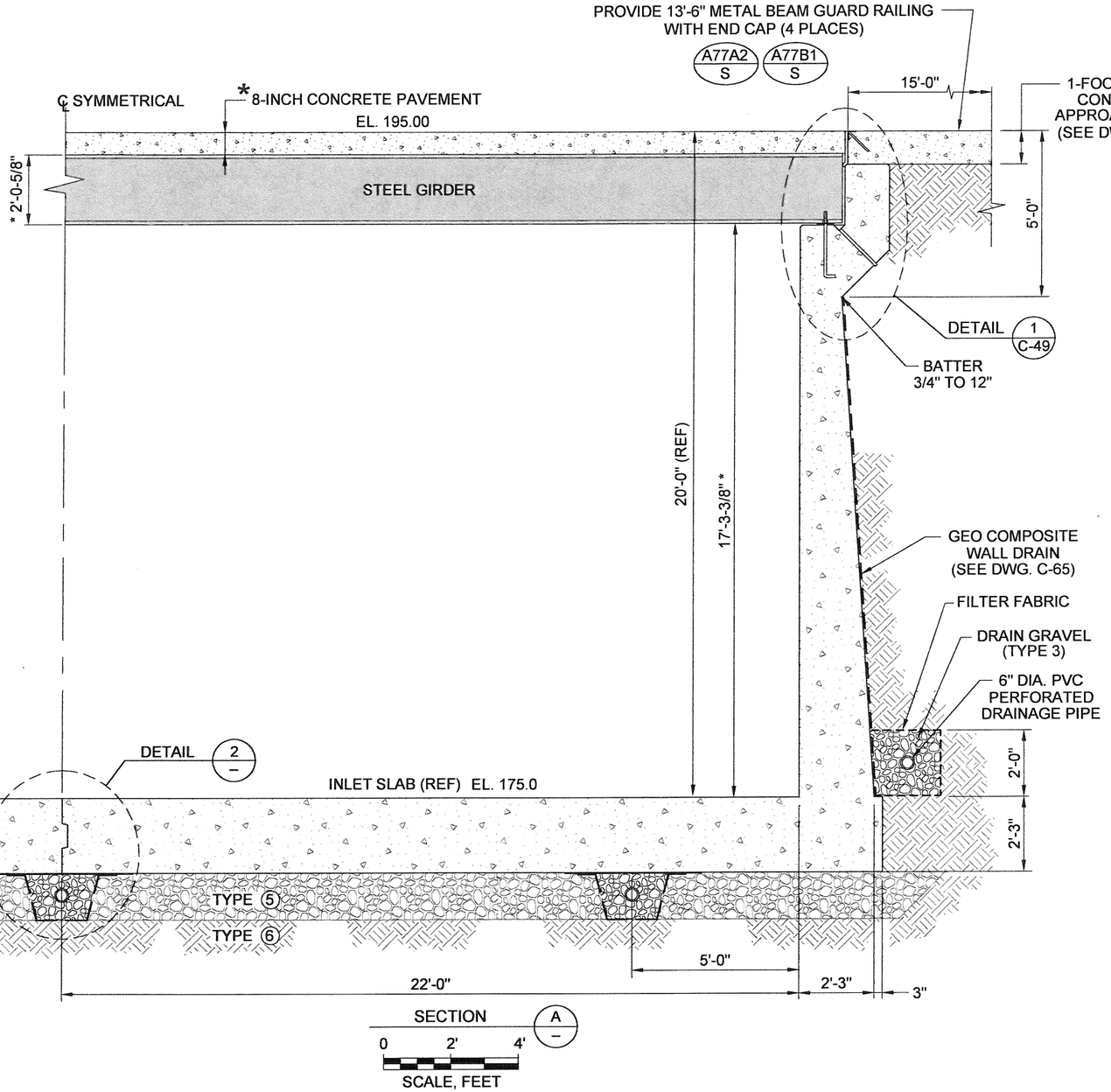

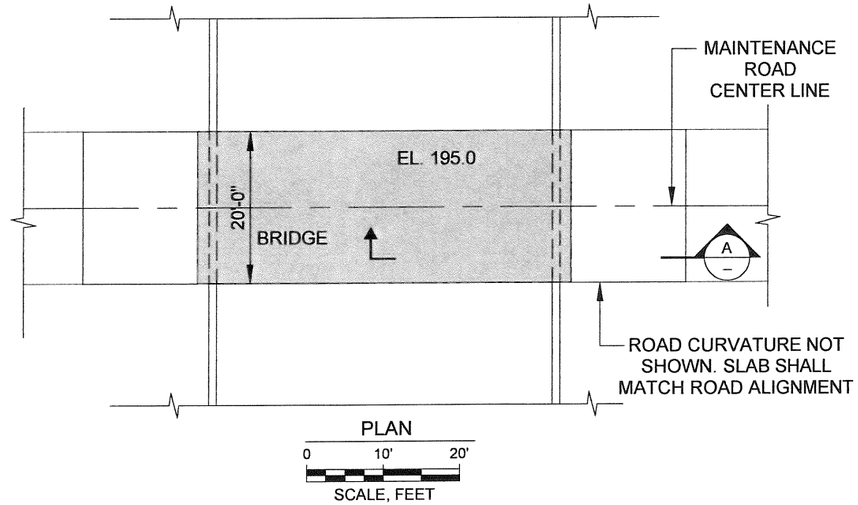

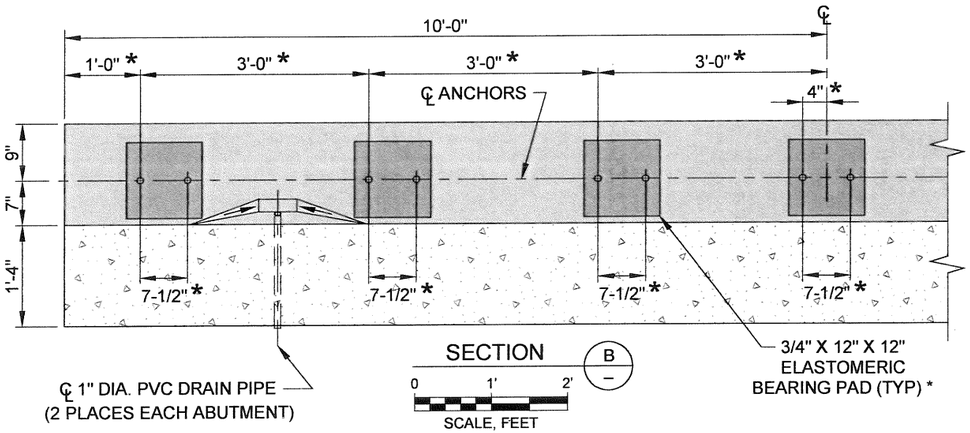

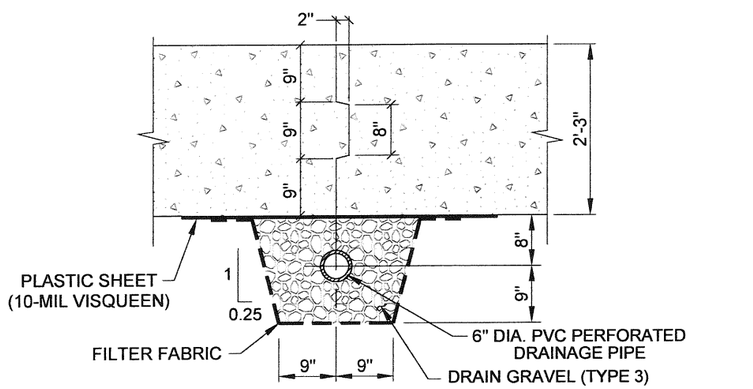

* = DIMENSIONS ARE APPROXIMATE FOR ILLUSTRATION PURPOSES ONLY AND NEED TO BE ADJUSTED TO MATCH FURNISHED PREFABRICATED BRIDGE GIRDER DIMENSIONS AND REQUIREMENTS.

* = BRIDGE ABUTMENT DESIGN SHALL BE MODIFIED AS REQUIRED AND ABUTMENT STRUCTURAL DETAILS SHALL BE REVISED BASED ON PREFABRICATED BRIDGE LOADS PROVIDED BY THE STEEL BRIDGE MANUFACTURER.

DRAFT - 90% REVIEW

C-43

REVISIONS			
NO.	DESCRIPTION	BY	DATE

DES.:	A.T.
DRAWN:	P.Y.M.
CHKD.:	K.V.S.
DATE:	08-16-10
SCALE:	AS NOTED
FLD. BK.	xxxx

REGISTERED PROFESSIONAL ENGINEER ALBERTO RUIZ-RIVAS No. 37051 EXP CIVIL STATE OF CALIFORNIA

PROJECT ENGINEER

PLANS APPROVAL DATE

GEI Consultants

CONTRA COSTA COUNTY
PUBLIC WORKS DEPARTMENT
255 GLACIER DRIVE
MARTINEZ, CALIFORNIA 94553

SCALE AS NOTED

FOR REDUCED PLANS ORIGINAL SCALE IS IN INCHES
0 1 2 3

BASE MAP	EAST COORD.	NORTH COORD.
L23	1635	528

UPPER SAND CREEK DETENTION BASIN

BASIN INLET STRUCTURE - BRIDGE and ABUTMENTS - PLAN, SECTIONS & DETAILS

FILE NO. FD-3210

SHEET XX OF YY

CADD FILE# C-43.dwg

PEN TBL. GEIWALKER.ctb

C-43 08-16-10 PYM

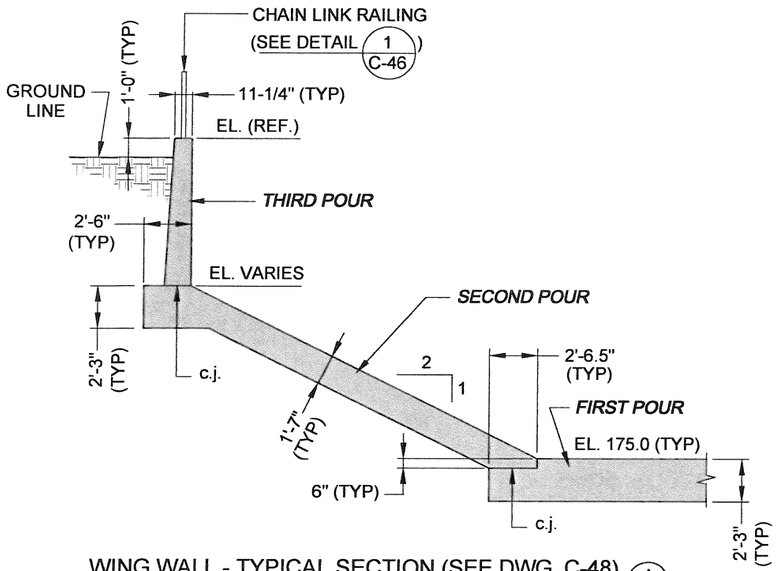

WING WALL - TYPICAL SECTION (SEE DWG. C-48) A

0 4' 8'
SCALE, FEET

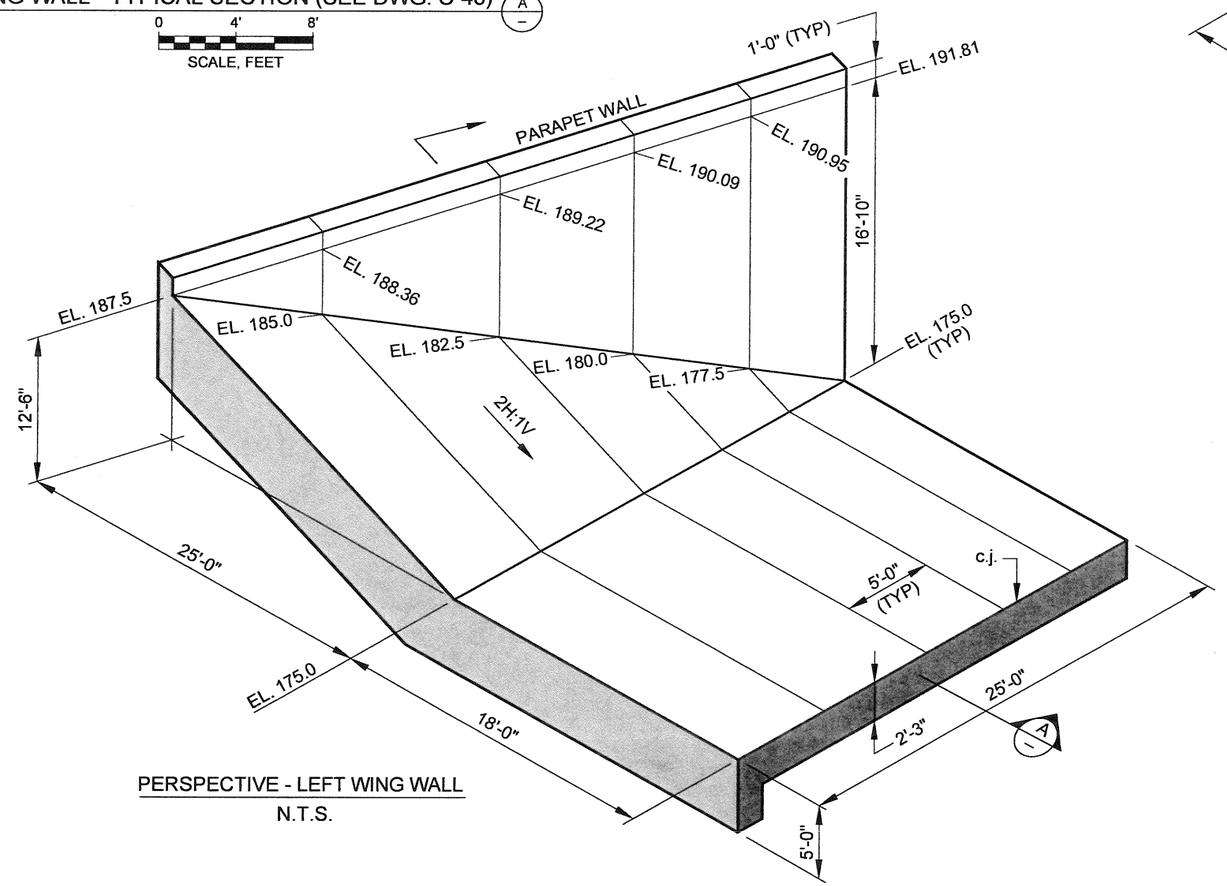

PERSPECTIVE - LEFT WING WALL
N.T.S.

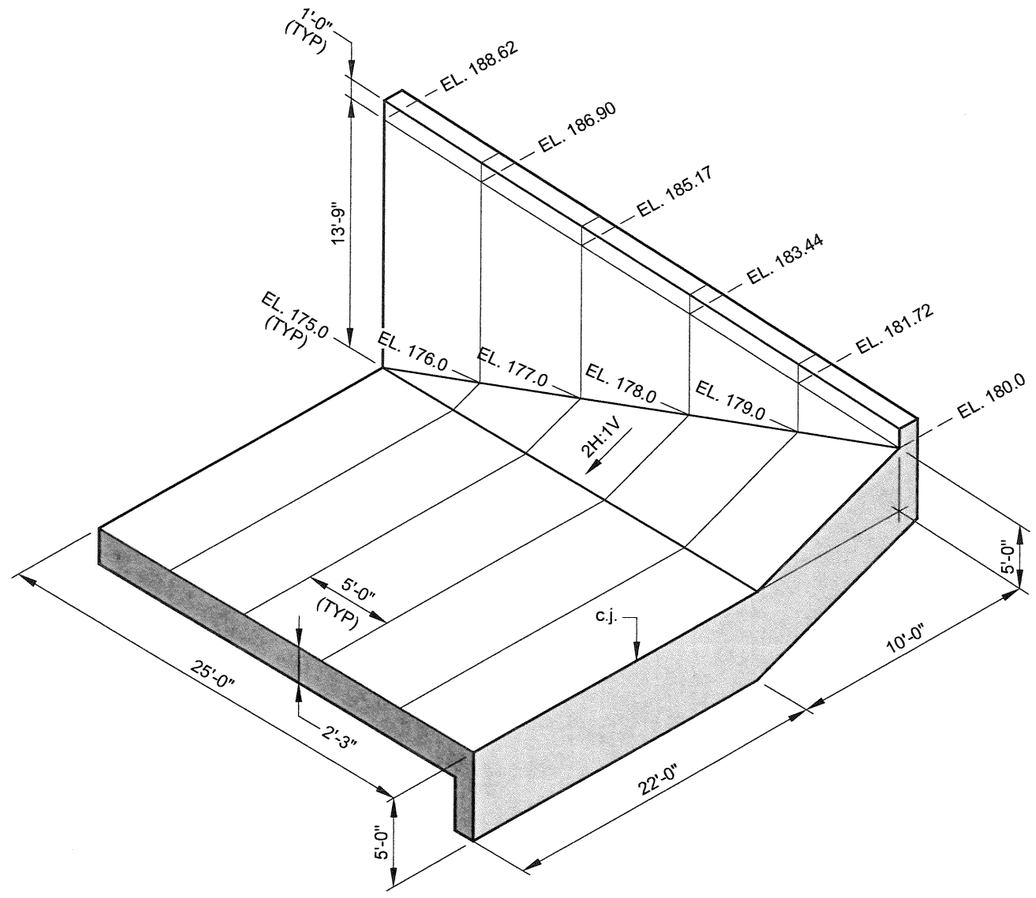

PERSPECTIVE - RIGHT WING WALL
N.T.S.

DRAFT - 90% REVIEW

C-44

REVISIONS			
NO.	DESCRIPTION	BY	DATE

DES.: A.T.
DRAWN: P.Y.M.
CHKD.: K.V.S.
DATE: 08-16-10
SCALE: AS INDICATED
FLD. BK. XXXX

REGISTERED PROFESSIONAL ENGINEER ALBERTO PUJOL-RIUS No. 37051 EXP CIVIL STATE OF CALIFORNIA

PROJECT ENGINEER

PLANS APPROVAL DATE

GEI Consultants

CONTRA COSTA COUNTY
PUBLIC WORKS DEPARTMENT
255 GLACIER DRIVE
MARTINEZ, CALIFORNIA 94553

SCALE AS INDICATED

FOR REDUCED PLANS ORIGINAL SCALE IS IN INCHES
0 1 2 3

BASE MAP	EAST COORD.	NORTH COORD.
L23	1635	528

UPPER SAND CREEK DETENTION BASIN

BASIN INLET STRUCTURE -
INLET WING WALLS - SECTIONS & DETAILS

FILE NO. FD-3210

SHEET XX OF YY

CADD FILE# C-44.dwg

PEN TBL: GEIWALKER.ctb

C-44 08-16-10 PYM

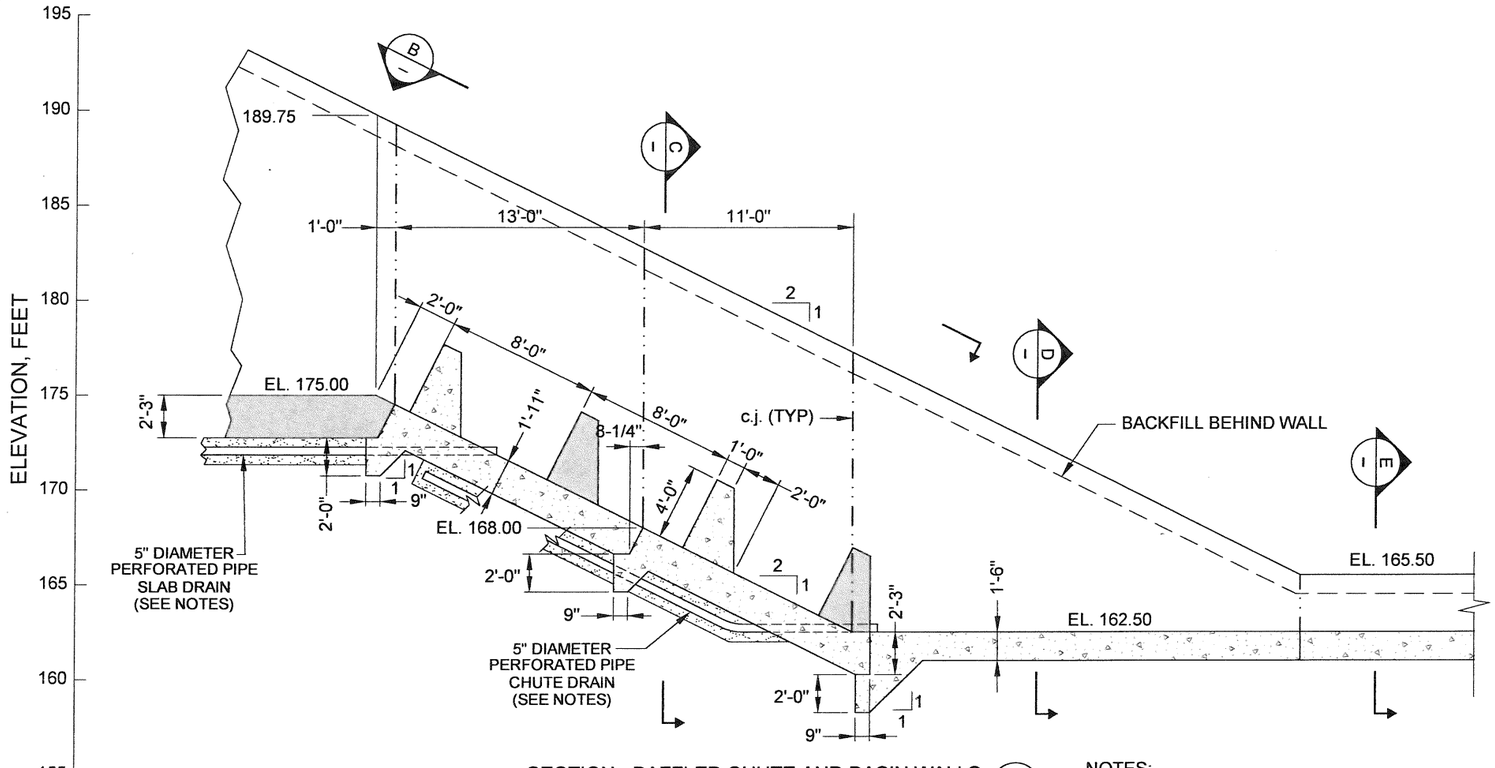

SECTION - BAFFLED CHUTE AND BASIN WALLS (A)
(SEE DWG. C-47 FOR REINFORCEMENT)

0 4 8
SCALE, FEET

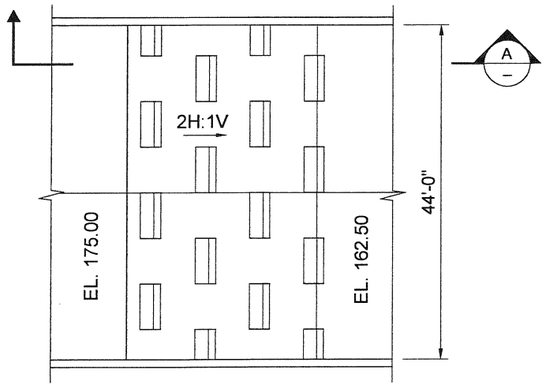

PARTIAL PLAN VIEW - BAFFLED CHUTE (B)

0 10' 20'
SCALE, FEET

NOTES:

1. SUBDRAINS UNDER APPROACH APRON SLAB SHALL DAYLIGNT AT THE UPPER END OF THE BAFFLED CHUTE AS SHOWN ON DWG. C-45, SECTION A.
2. SUBDRAINS UNDER BAFFLED CHUTE SHALL DAYLIGHT TO DISCHARGE INTO STILLING BASIN.
3. SUBDRAINS SHALL NOT CONTINUE UNDER STILLING BASIN SLAB.
4. WEEP HOLES AT 5-FOOT STAGGERED SPACING SHALL BE PROVIDED UNDER STILLING BASIN.
5. GEOCOMPOSITE DRAINAGE LAYER AND PERFORATED PIPE DRAIN, AS SHOWN ON DWG. C-43 SHALL BE PROVIDED BEHIND ALL VERTICAL WALL SURFACES.
6. FOR LAYOUT OF SLAB AND WALL DRAINS SEE DWG. C-40.

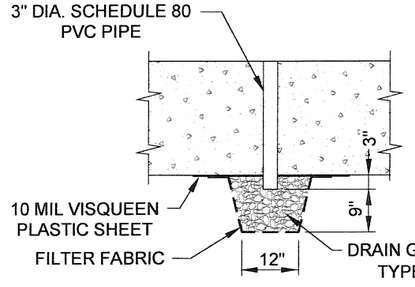

WEEPHOLE DETAIL (2)

0 1 2
SCALE, FEET

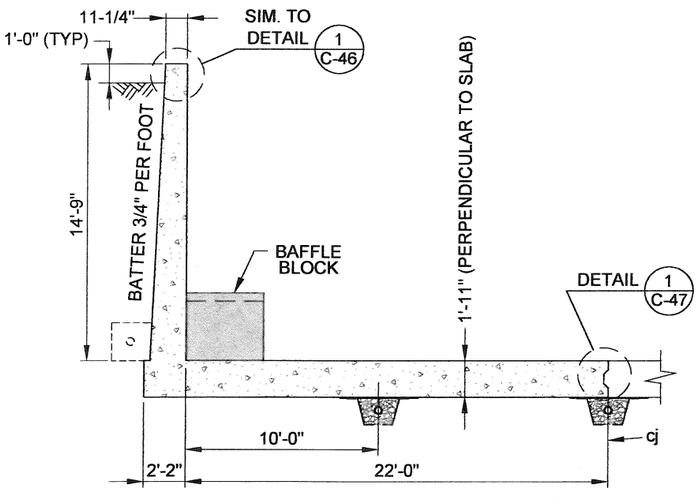

SECTION (C) C-47
(SEE DWG. C-47 FOR REINFORCEMENT)

0 4 8
SCALE, FEET

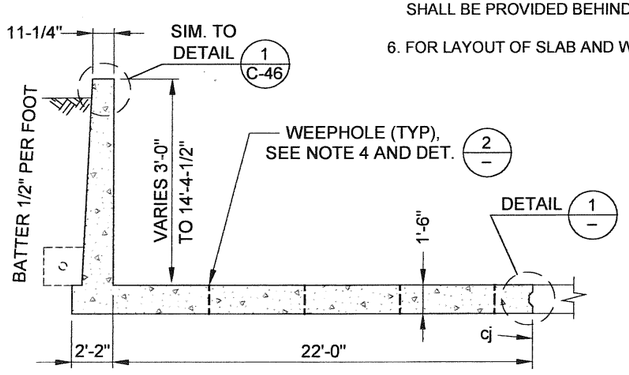

SECTION (D)

0 4 8
SCALE, FEET

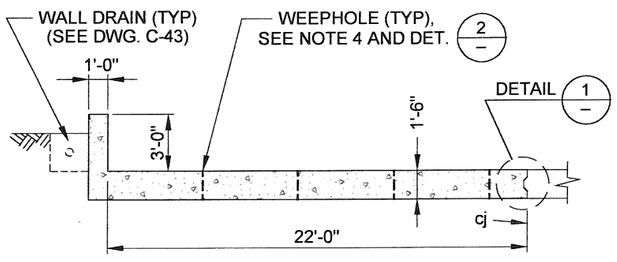

SECTION (E)

0 4 8
SCALE, FEET

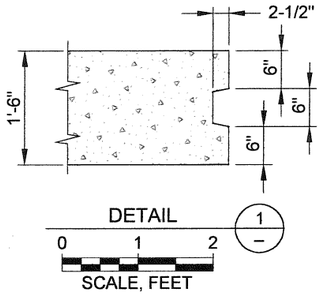

DETAIL (1)

0 1 2
SCALE, FEET

DRAFT - 90% REVIEW

C-45

REVISIONS			
NO.	DESCRIPTION	BY	DATE

DES.:	A.T.
DRAWN:	P.Y.M.
CHKD.:	K.V.S.
DATE:	08-16-10
SCALE:	AS NOTED
FLD. BK.	xxxx

REGISTERED PROFESSIONAL ENGINEER ALBERTO PUJOL-RIOS No. 37051 EXP CIVIL STATE OF CALIFORNIA

PROJECT ENGINEER

PLANS APPROVAL DATE

GEI Consultants

CONTRA COSTA COUNTY
PUBLIC WORKS DEPARTMENT
255 GLACIER DRIVE
MARTINEZ, CALIFORNIA 94553

SCALE, AS INDICATED

FOR REDUCED PLANS ORIGINAL SCALE IS IN INCHES
0 1 2 3

BASE MAP	EAST COORD.	NORTH COORD.
L23	1635	528

UPPER SAND CREEK DETENTION BASIN

BASIN INLET STRUCTURE - BASIN WALLS and BAFFLES - PLANS, SECTIONS & DETAILS

FILE NO. FD-3210

SHEET XX OF YY

CADD FILE# C-45.dwg

PEN TBL: GEIWALKER.ctb

C-45 08-16-10 PYM

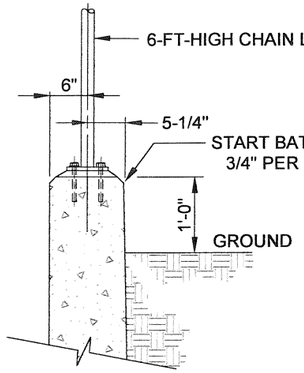

DETAIL 1 / CHAIN LINK RAILING

0 1' 2'

SCALE, FEET

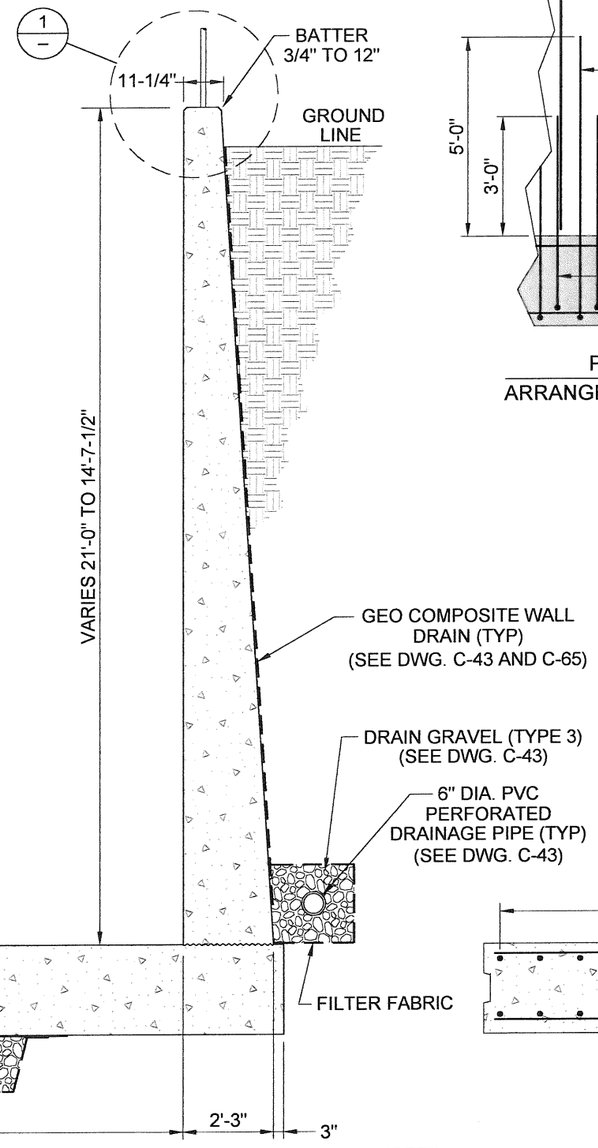

APPROACH APRON - TYPICAL WALL SECTION

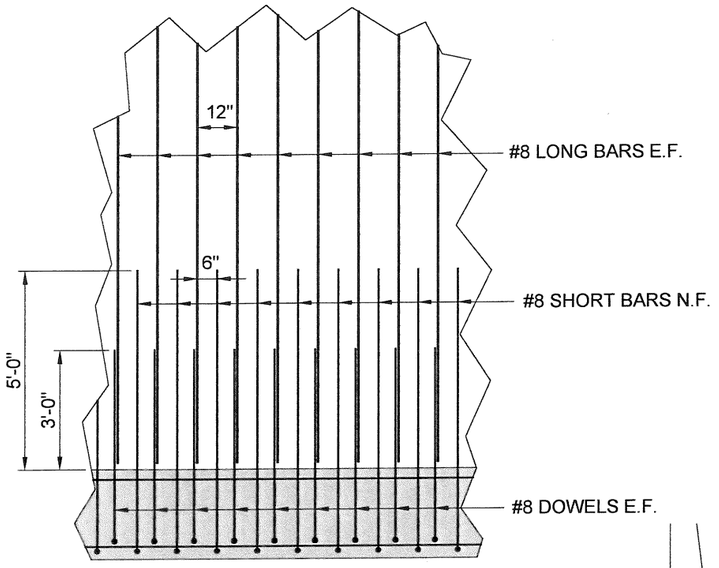

PARTIAL ELEVATION
ARRANGEMENT OF VERTICAL BARS A –

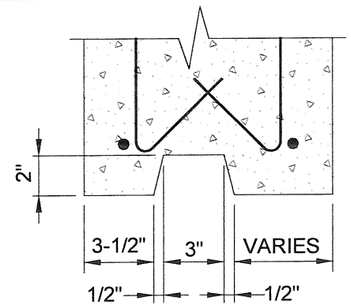

SECTION B –
N.T.S.

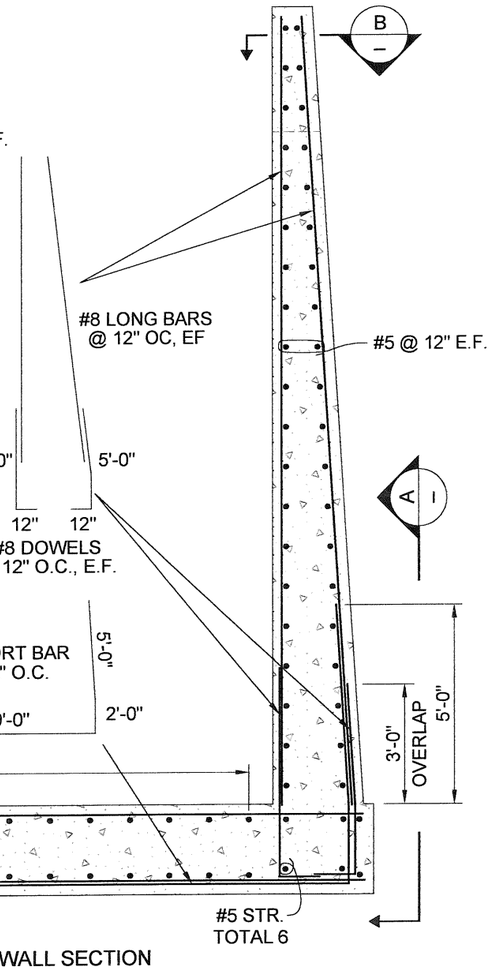

APPROACH APRON RETAINING WALL SECTION

NOTES:
1. SEE NOTES ON DWG. C-45 FOR SUBDRAINS AND WALL DRAINS.

0 2' 4'

SCALE, FEET

DRAFT - 90% REVIEW

C-46

REVISIONS			
NO.	DESCRIPTION	BY	DATE

DES.:	A.T.
DRAWN:	P.Y.M.
CHKD.:	K.V.S.
DATE:	08-16-10
SCALE:	AS NOTED
FLD. BK.	XXXX

REGISTERED PROFESSIONAL ENGINEER ALBERTO PUCK-RUIZ No. 37051 EXP. CIVIL STATE OF CALIFORNIA

PROJECT ENGINEER

PLANS APPROVAL DATE

GEI Consultants

CONTRA COSTA COUNTY
PUBLIC WORKS DEPARTMENT
255 GLACIER DRIVE
MARTINEZ, CALIFORNIA 94553

SCALE AS NOTED

FOR REDUCED PLANS
ORIGINAL SCALE IS IN INCHES
0 1 2 3

BASE MAP	EAST COORD.	NORTH COORD.
L23	1635	528

UPPER SAND CREEK DETENTION BASIN

BASIN INLET STRUCTURE -
APPROACH APRON RETAINING WALL-
STRUCTURAL REINFORCEMENT

FILE NO. FD-3210 SHEET XX OF YY

CADD FILE# C-46.dwg PEN TBL. GEIWALKER.ctb

C-46 08-16-10 PYM

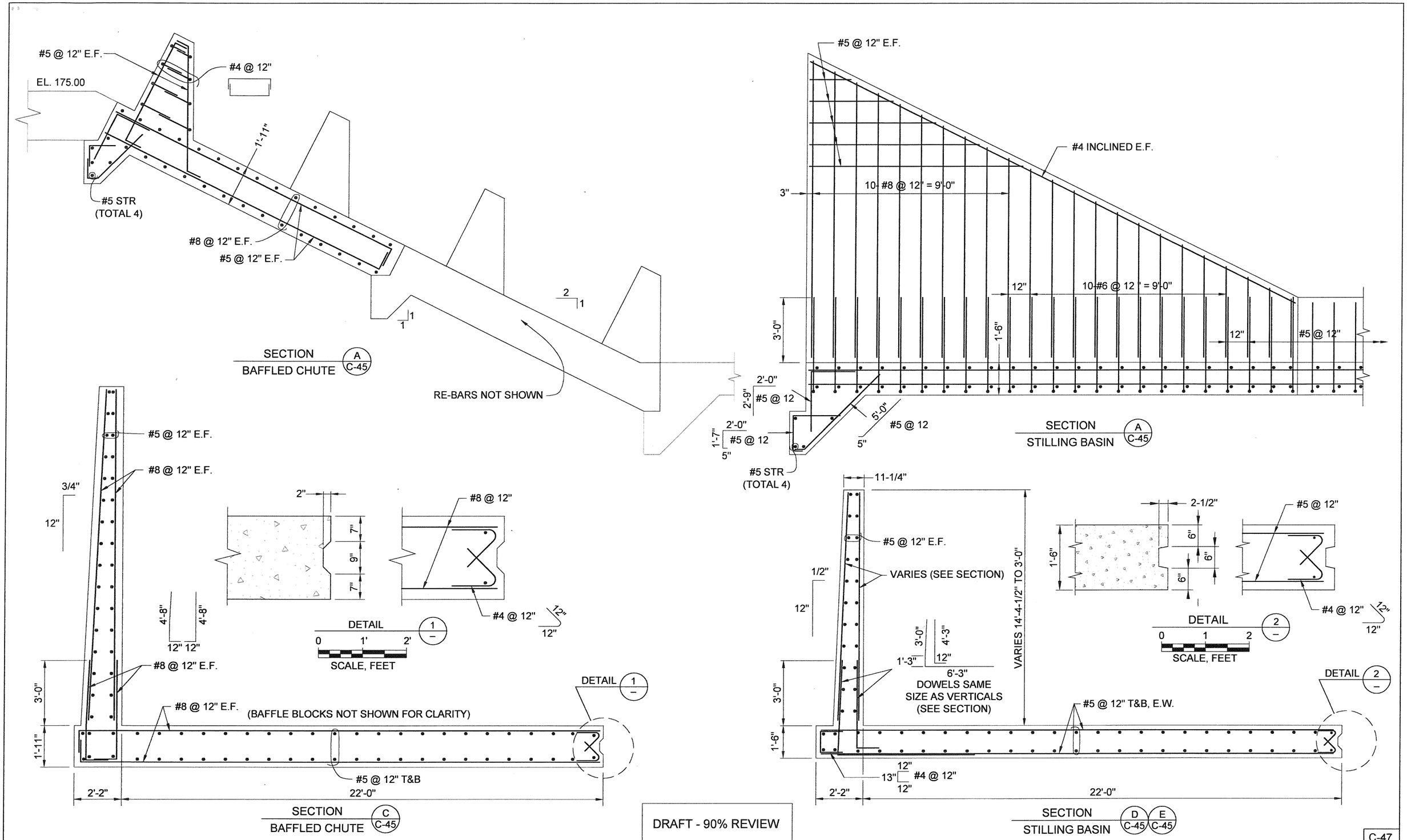

DRAFT - 90% REVIEW

C-47

REVISIONS			
NO.	DESCRIPTION	BY	DATE

DES.: A.T.
DRAWN: P.Y.M.
CHKD.: K.V.S.
DATE: 08-16-10
SCALE: AS NOTED
FLD. BK. XXXX

REGISTERED PROFESSIONAL ENGINEER ALBERTO PUJOL-RIUS No. 37051 EXP. CIVIL STATE OF CALIFORNIA

PROJECT ENGINEER

PLANS APPROVAL DATE

GEI Consultants

CONTRA COSTA COUNTY
PUBLIC WORKS DEPARTMENT
255 GLACIER DRIVE
MARTINEZ, CALIFORNIA 94553

0 2' 4'
SCALE, FEET
(AND OTHERWISE NOTED)

FOR REDUCED PLANS
ORIGINAL SCALE IS IN INCHES
0 1 2 3

BASE MAP	EAST COORD.	NORTH COORD.
L23	1635	528

UPPER SAND CREEK DETENTION BASIN

BASIN INLET STRUCTURE -
BAFFLE STRUCTURE & STILLING BASIN
REINFORCEMENT

FILE NO. FD-3210 SHEET XX OF YY

CADD FILE# C-47.dwg PEN TBL: GEIWALKER.ctb

C-47 08-16-10 PYM

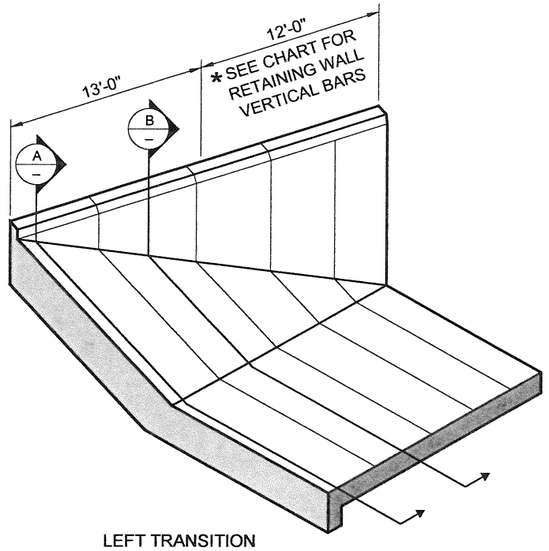

LEFT TRANSITION

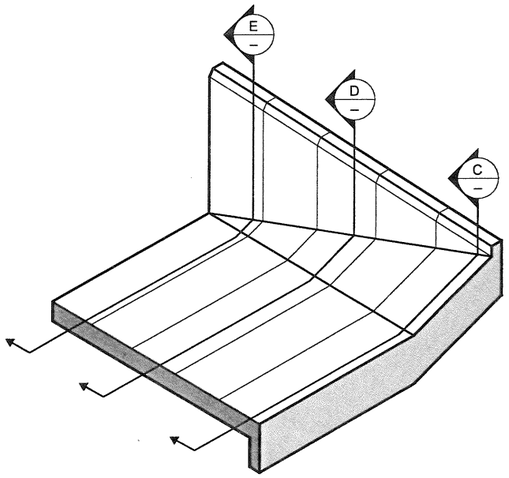

RIGHT TRANSITION

CHART			
SECTION	BEGIN	END	REMARK
A	STA 0+00	STA 0+01	SEE SECTION A
B	STA 0+01	STA 0+12	SEE SECTION B
*	STA 0+13	STA 0+18	RET. WALL VERT BARS #8 @ 12"
*	STA 0+19	STA 0+25	RET. WALL VERT BARS SEE SECTION A ON DWG. C-46

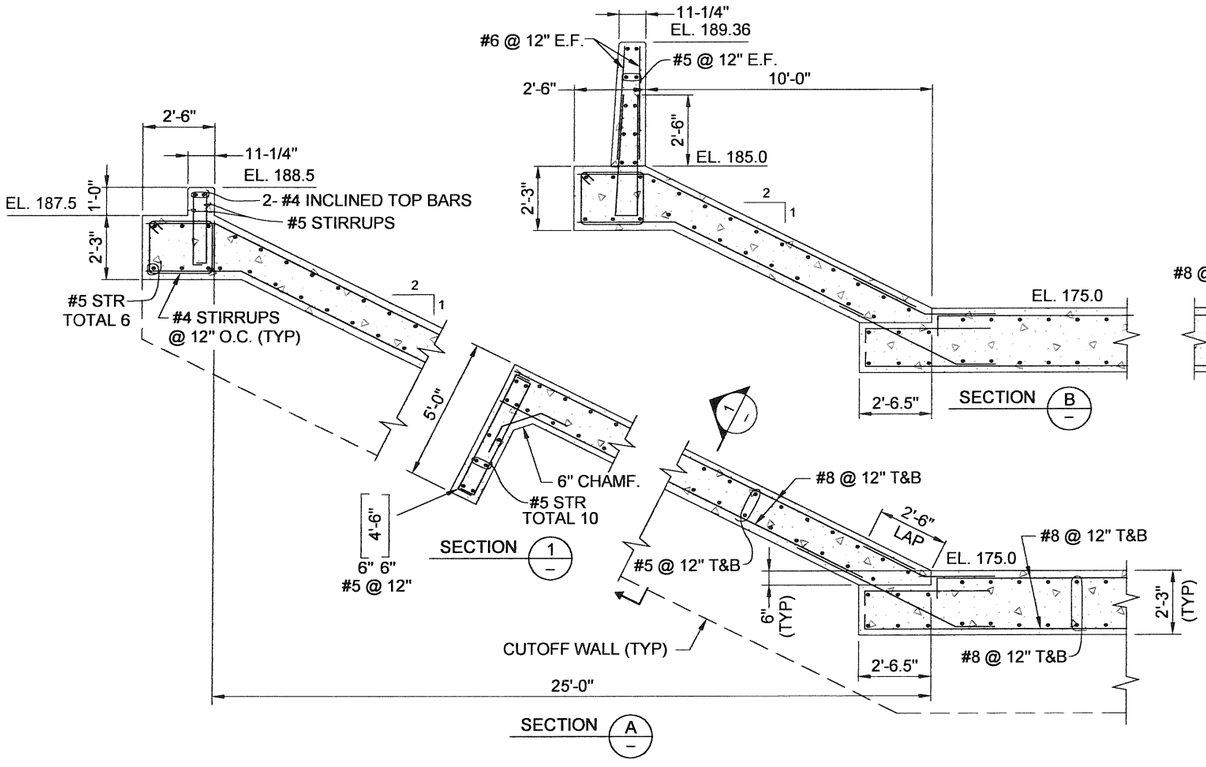

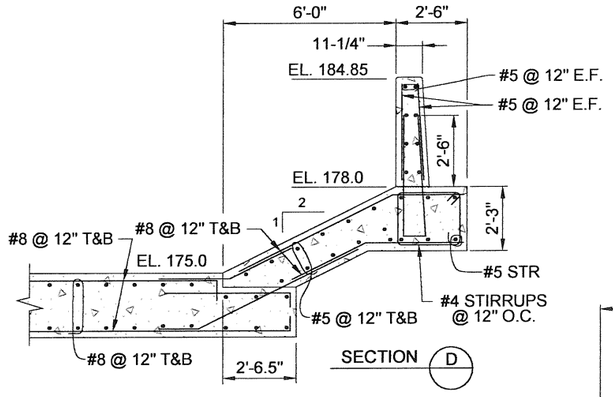

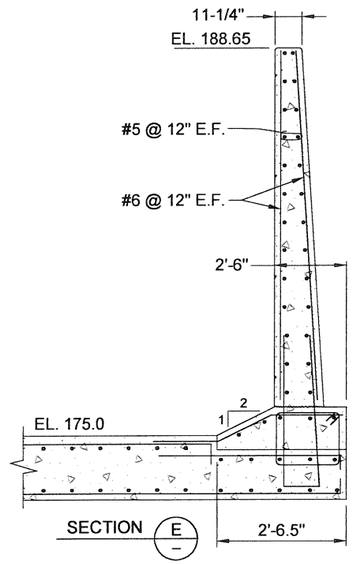

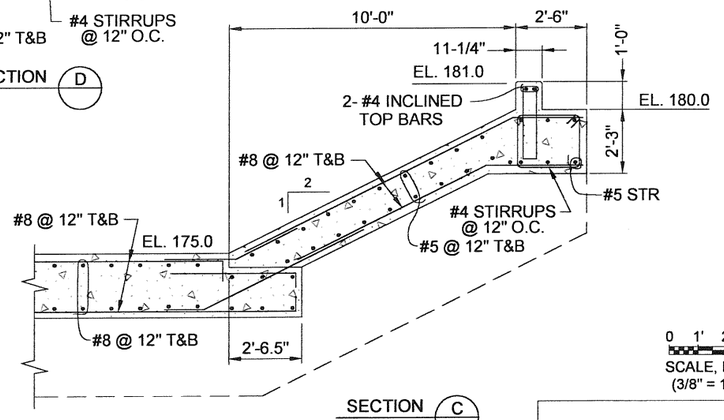

0 1' 2' 3'
SCALE, FEET
(3/8" = 1'-0")

DRAFT - 90% REVIEW

C-48

REVISIONS			
NO.	DESCRIPTION	BY	DATE

DES.: A.T.
DRAWN: P.Y.M.
CHKD.: K.V.S.
DATE: 08-16-10
SCALE: AS NOTED
FLD. BK. XXXX

REGISTERED PROFESSIONAL ENGINEER ALBERTO PUGA HUGO No. 37051 EXP CIVIL STATE OF CALIFORNIA

PROJECT ENGINEER

PLANS APPROVAL DATE

GEI Consultants

CONTRA COSTA COUNTY
PUBLIC WORKS DEPARTMENT
255 GLACIER DRIVE
MARTINEZ, CALIFORNIA 94553

SCALE AS NOTED

FOR REDUCED PLANS
ORIGINAL SCALE IS IN INCHES
0 1 2 3

BASE MAP	EAST COORD.	NORTH COORD.
L23	1635	528

UPPER SAND CREEK DETENTION BASIN

BASIN INLET STRUCTURE -
INLET TRANSITION -
REINFORCEMENT DETAILS

FILE NO. FD-3210

SHEET XX OF YY

CADD FILE# C-25.dwg

PEN TBL. GEIWALKER.ctb

C-48 08-16-10 PYM

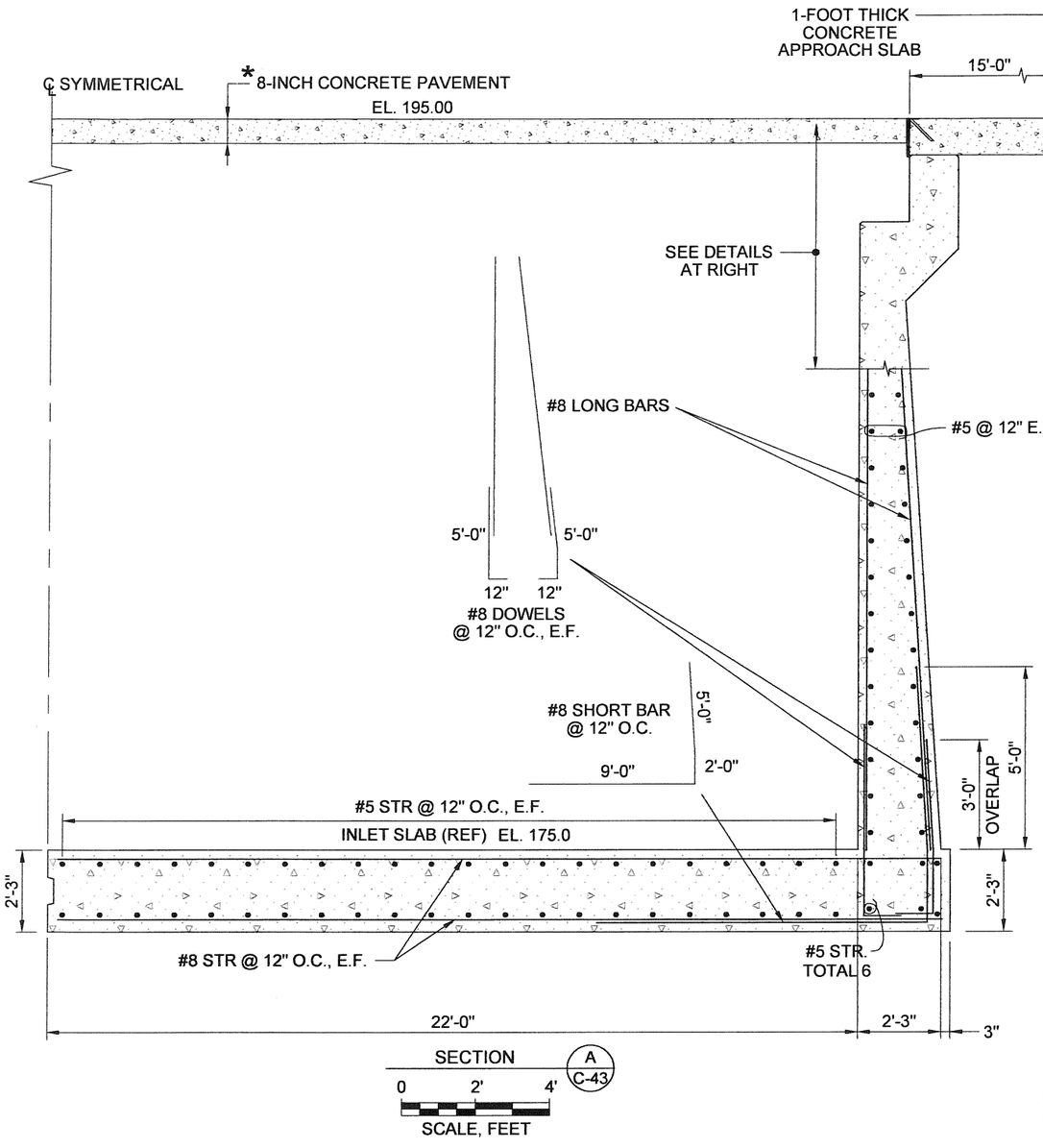

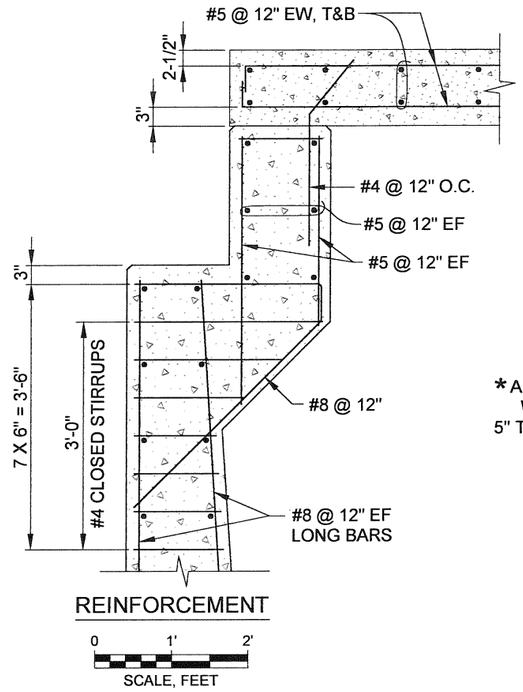

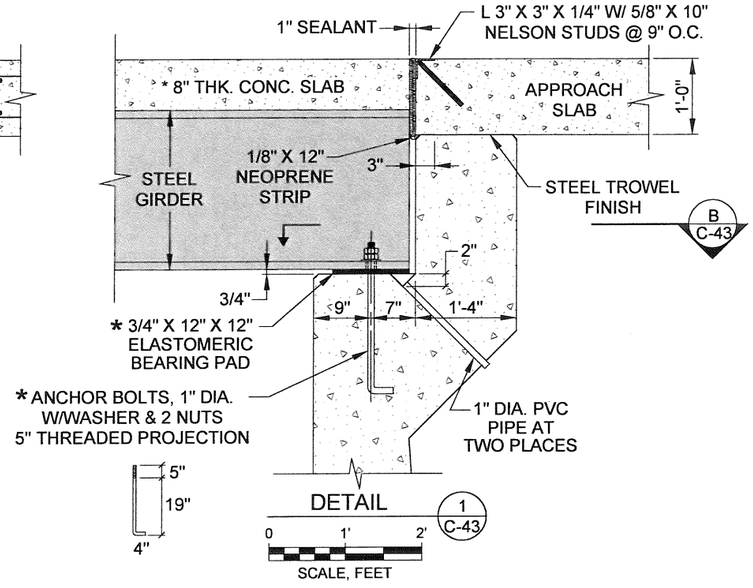

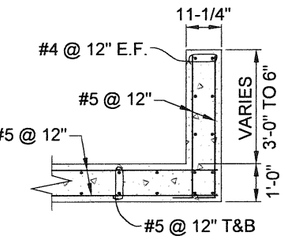

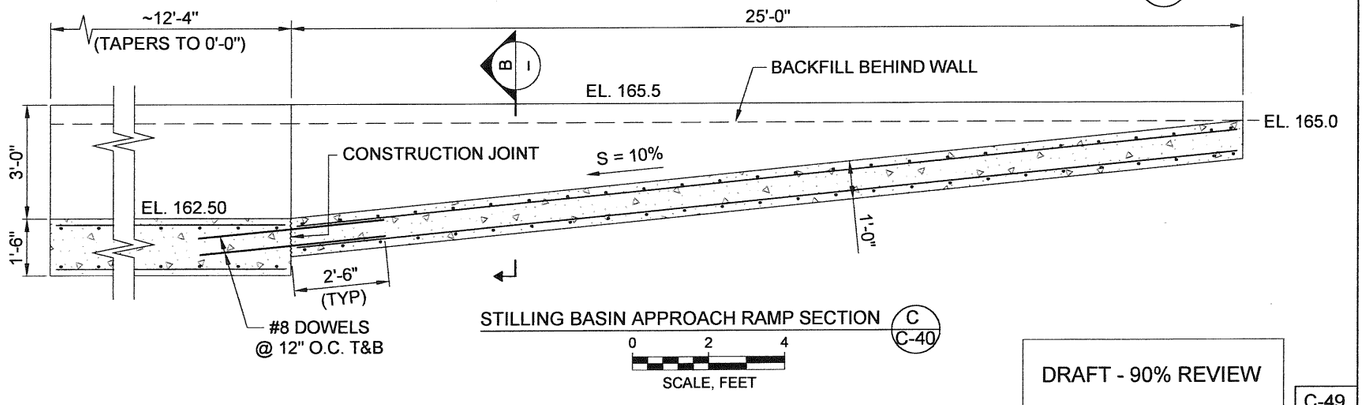

* = DIMENSIONS ARE APPROXIMATE FOR ILLUSTRATION PURPOSES ONLY AND NEED TO BE ADJUSTED TO MATCH FURNISHED PREFABRICATED BRIDGE GIRDER DIMENSIONS AND REQUIREMENTS.

* = BRIDGE ABUTMENT DESIGN SHALL BE MODIFIED AS REQUIRED AND ABUTMENT STRUCTURAL DETAILS SHALL BE REVISED BASED ON PREFABRICATED BRIDGE LOADS PROVIDED BY THE STEEL BRIDGE MANUFACTURER.

DRAFT - 90% REVIEW

C-49

REVISIONS			
NO.	DESCRIPTION	BY	DATE

DES.: A.T.
DRAWN: P.Y.M.
CHKD.: C.A.
DATE: 08-16-10
SCALE: AS NOTED
FLD. BK. xxxx

REGISTERED PROFESSIONAL ENGINEER ALBERTO PUJOL-RUIZ No. 37051 EXP. Civil STATE OF CALIFORNIA

PROJECT ENGINEER

PLANS APPROVAL DATE

GEI Consultants

CONTRA COSTA COUNTY
PUBLIC WORKS DEPARTMENT
255 GLACIER DRIVE
MARTINEZ, CALIFORNIA 94553

SCALE AS NOTED

FOR REDUCED PLANS ORIGINAL SCALE IS IN INCHES
0 1 2 3

BASE MAP	EAST COORD.	NORTH COORD.
L23	1635	528

UPPER SAND CREEK DETENTION BASIN

BASIN INLET STRUCTURE - BRIDGE ABUTMENTS - REINFORCEMENT DETAILS AND INLET SPILLWAY ACCESS RAMP

FILE NO. FD-3210

SHEET XX OF YY

CADD FILE# C-49.dwg

PEN TBL GEIWALKER.ctb

C-49 08-16-10 PYM